FOREWORD

This wiring diagram manual has been prepared to provide information on the electrical system of the 2001 PRIUS.

Applicable models: NHW11 Series

For service specifications and repair procedures of the above models other than those listed in this manual, refer to the following manuals;

Manual Name	Pub. No.
● 2001 PRIUS Repair Manual	
Volume 1	RM778U1
Volume 2	RM778U2
● 2001 PRUIS New Car Features	NCF182U

All information in this manual is based on the latest product information at the time of publication. However, specifications and procedures are subject to change without notice.

TOYOTA MOTOR CORPORATION

CAUTION

When repairing the hybrid vehicle (HV), always follow the direction given in the repair manual listed above to prevent electrical shock, leakage or explosion.

NOTICE

When handling supplemental restraint system components (removal, installation or inspection, etc.), always follow the direction given in the repair manuals listed above to prevent accidents and supplemental restraint system malfunction.

A INTRODUCTION

This manual consists of the following 13 sections:

No.	Section	Description
A	INDEX	Index of the contents of this manual.
	INTRODUCTION	Brief explanation of each section.
B	HOW TO USE THIS MANUAL	Instructions on how to use this manual.
C	TROUBLE–SHOOTING	Describes the basic inspection procedures for electrical circuits.
D	ABBREVIATIONS	Defines the abbreviations used in this manual.
E	GLOSSARY OF TERMS AND SYMBOLS	Defines the symbols and functions of major parts.
F	RELAY LOCATIONS	Shows position of the Electronic Control Unit, Relays, Relay Block, etc. This section is closely related to the system circuit.
G	ELECTRICAL WIRING ROUTING	Describes position of Parts Connectors, Splice points, Ground points, etc. This section is closely related to the system circuit.
H	INDEX	Index of the system circuits.
	SYSTEM CIRCUITS	Electrical circuits of each system are shown from the power supply through ground points. Wiring connections and their positions are shown and classified by code according to the connection method. (Refer to the section, ”How to use this manual”). The ”System Outline” and ”Service Hints” useful for troubleshooting are also contained in this section.
I	GROUND POINT	Shows ground positions of all parts described in this manual.
J	POWER SOURCE (Current Flow Chart)	Describes power distribution from the power supply to various electrical loads.
K	CONNECTOR LIST	Describes the form of the connectors for the parts appeared in this book. This section is closely related to the system circuit.
L	PART NUMBER OF CONNECTORS	Indicates the part number of the connectors used in this manual.
M	OVERALL ELECTRICAL WIRING DIAGRAM	Provides circuit diagrams showing the circuit connections.

This manual provides information on the electrical circuits installed on vehicles by dividing them into a circuit for each system.

The actual wiring of each system circuit is shown from the point where the power source is received from the battery as far as each ground point. (All circuit diagrams are shown with the switches in the OFF position.)

When troubleshooting any problem, first understand the operation of the circuit where the problem was detected (see System Circuit section), the power source supplying power to that circuit (see Power Source section), and the ground points (see Ground Point section). See the System Outline to understand the circuit operation.

When the circuit operation is understood, begin troubleshooting of the problem circuit to isolate the cause. Use Relay Location and Electrical Wiring Routing sections to find each part, junction block and wiring harness connectors, wiring harness and wiring harness connectors, splice points, and ground points of each system circuit. Internal wiring for each junction block is also provided for better understanding of connection within a junction block.
Wiring related to each system is indicated in each system circuit by arrows (from__, to__). When overall connections are required, see the Overall Electrical Wiring Diagram at the end of this manual.

B HOW TO USE THIS MANUAL

[A]

STOP LIGHT

* The system shown here is an EXAMPLE ONLY. It is different to the actual circuit shown in the SYSTEM CIRCUITS SECTION.

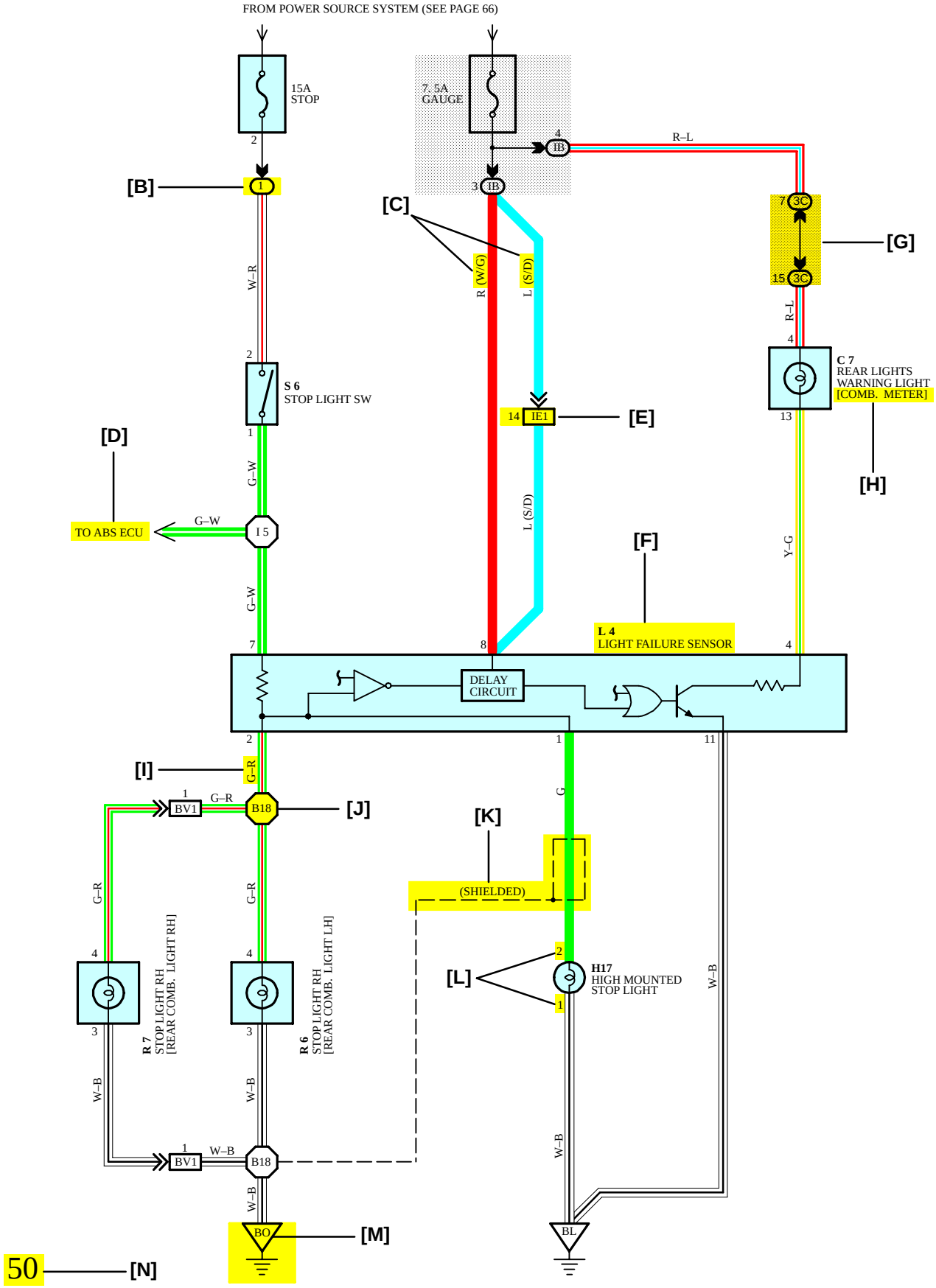

[A] : System Title

[B] : Indicates a Relay Block. No shading is used and only the Relay Block No. is shown to distinguish it from the J/B

Example: (1) Indicates Relay Block No.1

[C] : ( ) is used to indicate different wiring and connector, etc. when the vehicle model, engine type, or specification is different.

[D] : Indicates related system.

[E] : Indicates the wiring harness and wiring harness connector. The wiring harness with male terminal is shown with arrows (⩔).
Outside numerals are pin numbers.

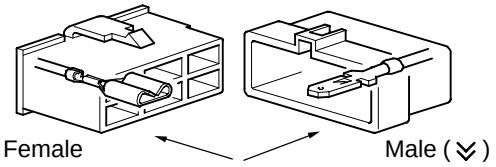

The first letter of the code for each wiring harness and wiring harness connector(s) indicates the component's location, e.g, "E" for the Engine Compartment, "I" for the Instrument Panel and Surrounding area, and "B" for the Body and Surrounding area.

When more than one code has the first and second letters in common, followed by numbers (e.g, IH1, IH2), this indicates the same type of wiring harness and wiring harness connector.

[F] : Represents a part (all parts are shown in sky blue). The code is the same as the code used in parts position.

[G] : Junction Block (The number in the circle is the J/B No. and the connector code is shown beside it). Junction Blocks are shaded to clearly separate them from other parts.

Example:

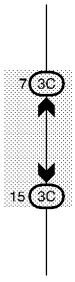

3C indicates that it is inside Junction Block No.3

[H] : When 2 parts both use one connector in common, the parts connector name used in the wire routing section is shown in square brackets [ ].

[I] : Indicates the wiring color.

Wire colors are indicated by an alphabetical code.

B	= Black	W	= White	BR	= Brown
L	= Blue	V	= Violet	SB	= Sky Blue
R	= Red	G	= Green	LG	= Light Green
P	= Pink	Y	= Yellow	GR	= Gray
O	= Orange				

The first letter indicates the basic wire color and the second letter indicates the color of the stripe.

Example: L – Y

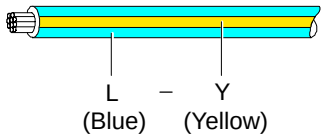

[J] : Indicates a wiring Splice Point (Codes are "E" for the Engine Room, "I" for the Instrument Panel, and "B" for the Body).

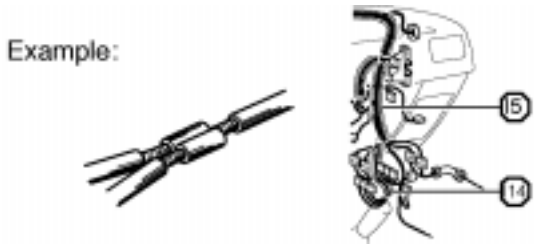

The Location of splice Point I 5 is indicated by the shaded section.

[K] : Indicates a shielded cable.

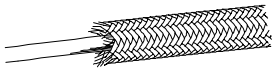

[L] : Indicates the pin number of the connector.
The numbering system is different for female and male connectors.

Example:

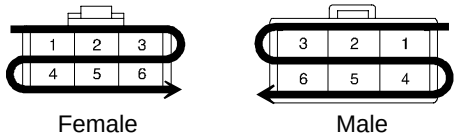

[M] : Indicates a ground point.

The first letter of the code for each ground point(s) indicates the component's location, e.g, "E" for the Engine Compartment, "I" for the Instrument Panel and Surrounding area, and "B" for the Body and Surrounding area.

[N] : Page No.

B HOW TO USE THIS MANUAL

[O] **SYSTEM OUTLINE**

Current is applied at all times through the STOP fuse to TERMINAL 2 of the stop light SW.
When the ignition SW is turned on, current flows from the GAUGE fuse to TERMINAL 8 of the light failure sensor, and also flows through the rear lights warning light to TERMINAL 4 of the light failure sensor.

STOP LIGHT DISCONNECTION WARNING

When the ignition SW is turned on and the brake pedal is pressed (Stop light SW on), if the stop light circuit is open, the current flowing from TERMINAL 7 of the light failure sensor to TERMINALS 1, 2 changes, so the light failure sensor detects the disconnection and the warning circuit of the light failure sensor is activated.
As a result, the current flows from TERMINAL 4 of the light failure sensor to TERMINAL 11 to GROUND and turns the rear lights warning light on. By pressing the brake pedal, the current flowing to TERMINAL 8 of the light failure sensor keeps the warning circuit on and holds the warning light on until the ignition SW is turned off.

[P] **SERVICE HINTS**

S6 STOP LIGHT SW

2–1 : Closed with the brake pedal depressed

L4 LIGHT FAILURE SENSOR

1, 2, 7–GROUND : Approx. **12** volts with the stop light SW on
4, 8–GROUND : Approx. **12** volts with the ignition SW at **ON** position
11–GROUND : Always continuity

[Q] **: PARTS LOCATION**

Code	See Page	Code	See Page	Code	See Page
C7	34	L4	36	R7	37
H17	36	R6	37	S6	35

[R] **: RELAY BLOCKS**

Code	See Page	Relay Blocks (Relay Block Location)
1	18	R/B No.1 (Instrument Panel Left)

[S] **: JUNCTION BLOCK AND WIRE HARNESS CONNECTOR**

Code	See Page	Junction Block and Wire Harness (Connector Location)
IB	20	Instrument Panel Wire and Instrument Panel J/B (Lower Finish Panel)
3C	22	Instrument Panel Wire and J/B No.3 (Instrument Panel Left Side)

[T] **: CONNECTOR JOINING WIRE HARNESS AND WIRE HARNESS**

Code	See Page	Joining Wire Harness and Wire Harness (Connector Location)
IE1	42	Floor Wire and Instrument Panel Wire (Left Kick Panel)
BV1	50	Luggage Room Wire and Floor Wire (Luggage Compartment Left)

[U] **: GROUND POINTS**

Code	See Page	Ground Points Location
BL	50	Under the Left Quarter Pillar
BO	50	Back Panel Center

[V] **: SPLICE POINTS**

Code	See Page	Wire Harness with Splice Points	Code	See Page	Wire Harness with Splice Points
I5	44	Cowl Wire	B18	50	Luggage Room Wire

[O] : Explains the system outline.

[P] : Indicates values or explains the function for reference during troubleshooting.

[Q] : Indicates the reference page showing the position on the vehicle of the parts in the system circuit.

Example : Part ”L4” (Light Failure Sensor) is on page 36 of the manual.
∗ The letter in the code is from the first letter of the part, and the number indicates its order in parts starting with that letter.

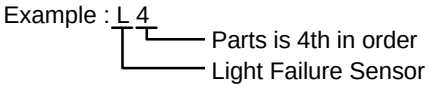

[R] : Indicates the reference page showing the position on the vehicle of Relay Block Connectors in the system circuit.

Example : Connector ”1” is described on page 18 of this manual and is installed on the left side of the instrument panel.

[S] : Indicates the reference page showing the position on the vehicle of J/B and Wire Harness in the system circuit.

Example : Connector ”3C” connects the Instrument Panel Wire and J/B No.3. It is described on page 22 of this manual, and is installed on the instrument panel left side.

[T] : Indicates the reference page describing the wiring harness and wiring harness connector (the female wiring harness is shown first, followed by the male wiring harness).

Example : Connector ”IE1” connects the floor wire (female) and Instrument panel wire (male). It is described on page 42 of this manual, and is installed on the left side kick panel.

[U] : Indicates the reference page showing the position of the ground points on the vehicle.

Example : Ground point ”BO” is described on page 50 of this manual and is installed on the back panel center.

[V] : Indicates the reference page showing the position of the splice points on the vehicle.

Example : Splice point ”I5” is on the Cowl Wire Harness and is described on page 44 of this manual.

B HOW TO USE THIS MANUAL

The ground points circuit diagram shows the connections from all major parts to the respective ground points. When troubleshooting a faulty ground point, checking the system circuits which use a common ground may help you identify the problem ground quickly. The relationship between ground points (EA, IB and IC shown below) can also be checked this way.

I GROUND POINT

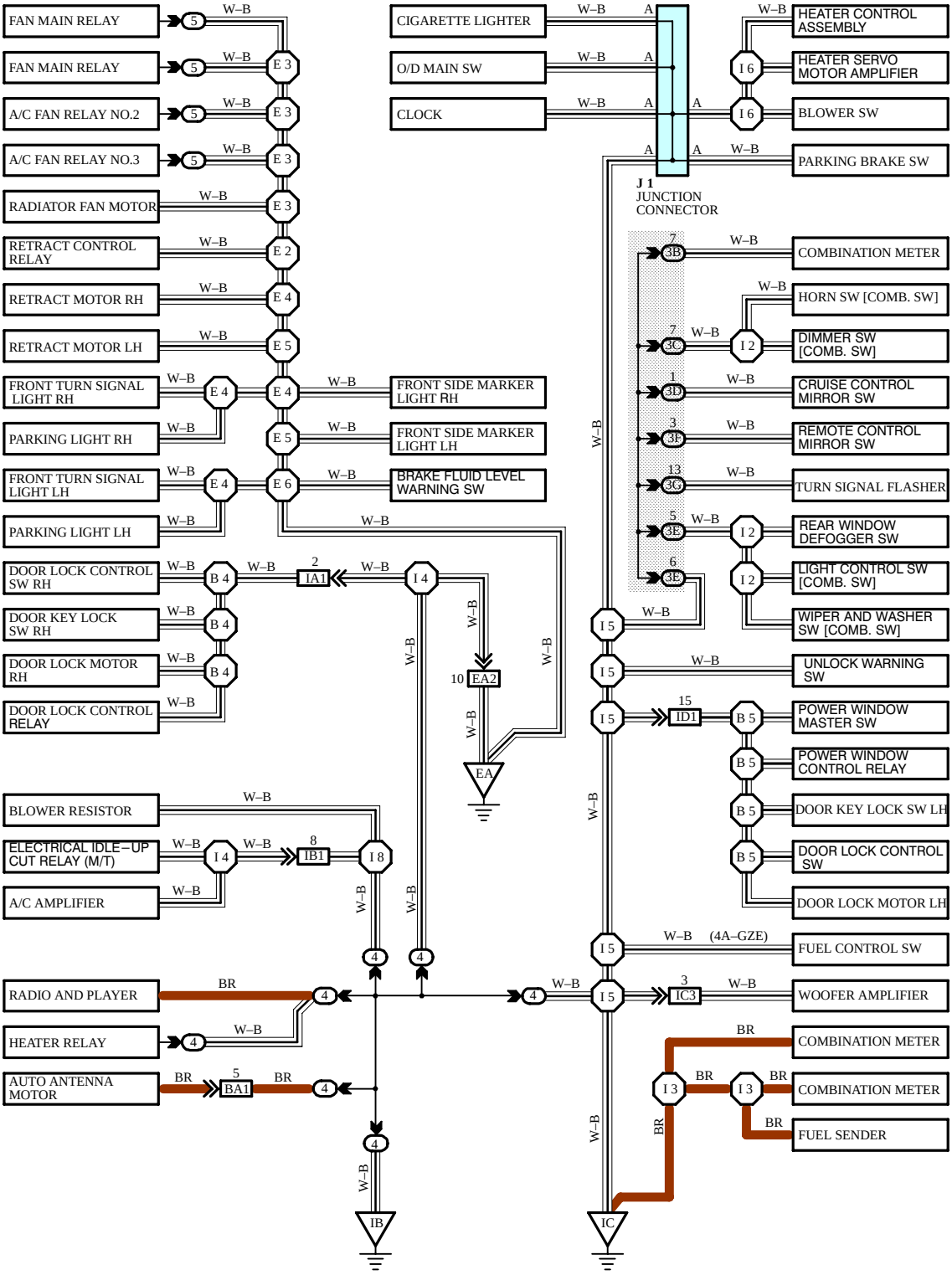

* The system shown here is an EXAMPLE ONLY. It is different to the actual circuit shown in the SYSTEM CIRCUITS SECTION.

The ”Current Flow Chart” section, describes which parts each power source (fuses, fusible links, and circuit breakers) transmits current to. In the Power Source circuit diagram, the conditions when battery power is supplied to each system are explained. Since all System Circuit diagrams start from the power source, the power source system must be fully understood.

J POWER SOURCE (Current Flow Chart)

The chart below shows the route by which current flows from the battery to each electrical source (Fusible Link, Circuit Breaker, Fuse, etc.) and other parts.

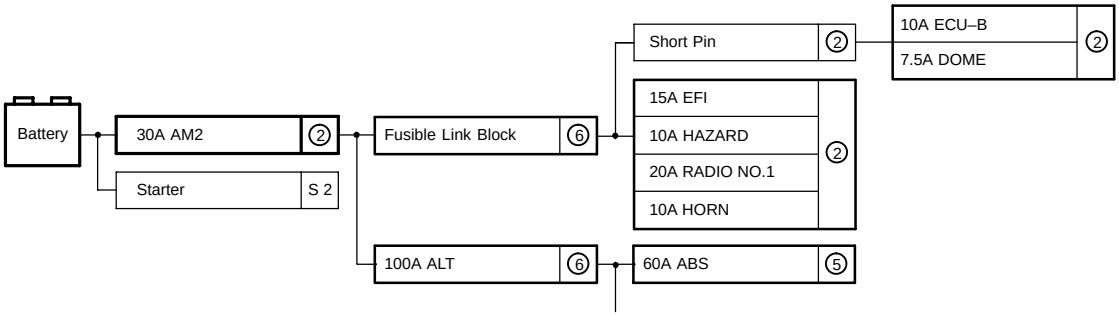

Engine Room R/B (See Page 20)

Fuse		System	Page
20A	STOP	ABS ABS and Traction Control Cruise Control Electronically Controlled Transmission and A/T Indicator Multiplex Communication System	194 187 180 166 210
10A	DOME	Cigarette Lighter and Clock Combination Meter Headlight Interior Light Key Reminder and Seat Belt Warning Light Auto Turn Off ft Deterrent and Door L...	214 230 112 122

POWER SOURCE

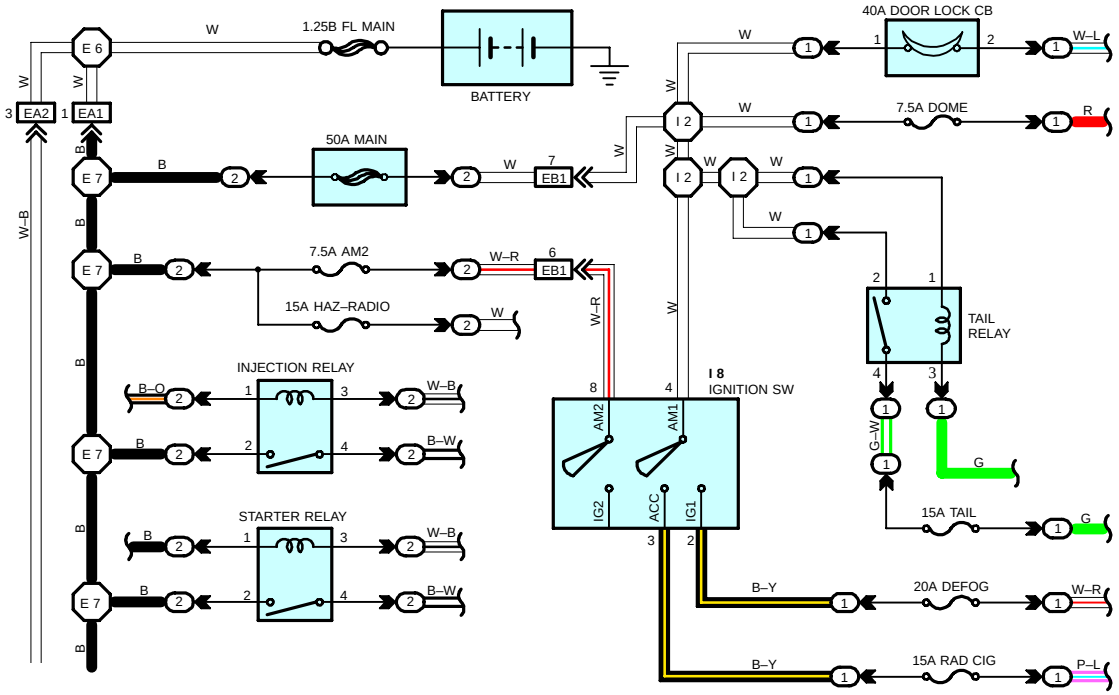

* The system shown here is an EXAMPLE ONLY. It is different to the actual circuit shown in the SYSTEM CIRCUITS SECTION.

K CONNECTOR LIST

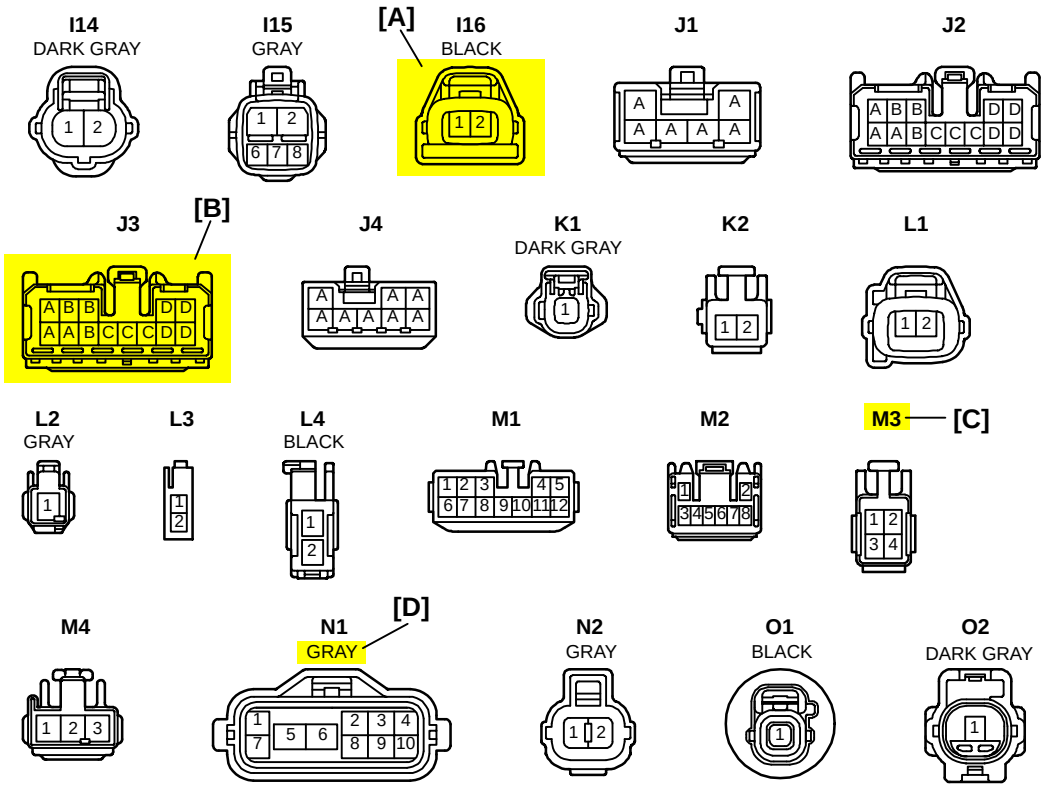

[A] : Indicates connector to be connected to a part. (The numeral indicates the pin No.)

[B] : Junction Connector
Indicates a connector which is connected to a short terminal.

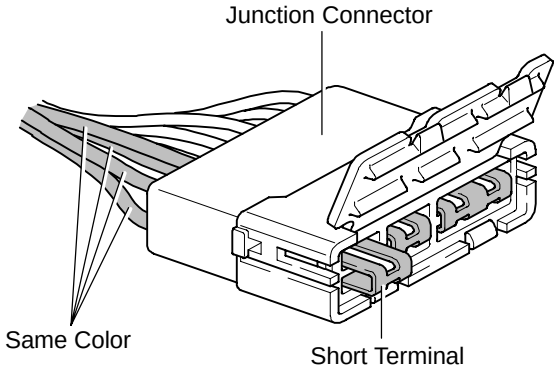

Junction connector in this manual include a short terminal which is connected to a number of wire harnesses. Always perform inspection with the short terminal installed. (When installing the wire harnesses, the harnesses can be connected to any position within the short terminal grouping. Accordingly, in other vehicles, the same position in the short terminal may be connected to a wire harness from a different part.)
Wire harness sharing the same short terminal grouping have the same color.

[C] : Parts Code
The first letter of the code is taken from the first letter of part, and the numbers indicates its order in parts which start with the same letter.

[D] : Connector Color
Connectors not indicated are milky white in color.

L PART NUMBER OF CONNECTORS

Code	Part Name	Part Number
A 1	A/C Ambient Temp. Sensor	90980–11070
A 2	A/C Condenser Fan Motor	90980–11237
A 3	A/C Condenser Fan Relay	90980–10940
A 4	A/C Triple Pressure SW (A/C Dual and Single Pressure SW)	90980–10943
[A]	A/T Oil Temp. Sensor [B]	909 [C] 413
A 6	ABS Actuator	90980–11151
A 7	ABS Actuator	90980–11009
A 8	ABS Speed Sensor Front LH	90980–10941
A 9	ABS Speed Sensor Front RH	90980–11002
A10	Airbag Sensor Front LH	90980–11856
A11	Airbag Sensor Front RH	
A12		90980–11194
		90980–11

Code	Part Name	Part Number
D 4	Diode (Door Courtesy Light)	90980–11608
D 5	Diode (Key Off Operation)	90980–10962
D 6	Diode (Luggage Compartment Light)	90980–11608
D 7	Door Lock Control Relay	90980–10848
D 8	Door Courtesy Light LH	90980–11148
D 9	Door Courtesy Light RH	
D10	Door Courtesy SW LH	90980–11097
D11	Door Courtesy SW RH	
D12	Door Courtesy SW Front LH	90980–11156
D13	Door Courtesy SW Front RH	
D14	Door Courtesy SW Rear LH	
D15	Door Courtesy SW Rear RH	
D16	nd Unlock SW LH	90980–11170
	RH	

[A] : Part Code

[B] : Part Name

[C] : Part Number
Toyota Part Number are indicated.

Not all of the above part numbers of the connector are established for the supply. In case of ordering a connector or terminal with wire, please confirm in advance if there is supply for it using “Parts Catalog News” (published by Parts Engineering Administration Dept.).

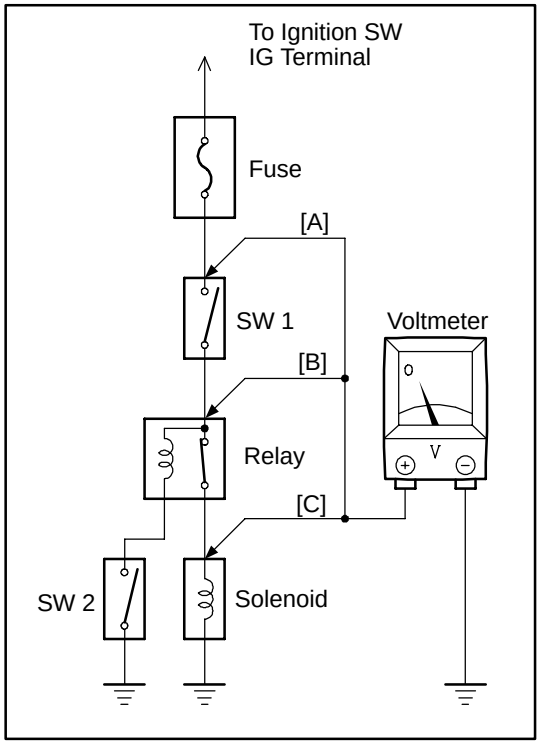

VOLTAGE CHECK

(a) Establish conditions in which voltage is present at the check point.

Example:
[A] – Ignition SW on
[B] – Ignition SW and SW 1 on
[C] – Ignition SW, SW 1 and Relay on (SW 2 off)

(b) Using a voltmeter, connect the negative lead to a good ground point or negative battery terminal, and the positive lead to the connector or component terminal.
This check can be done with a test light instead of a voltmeter.

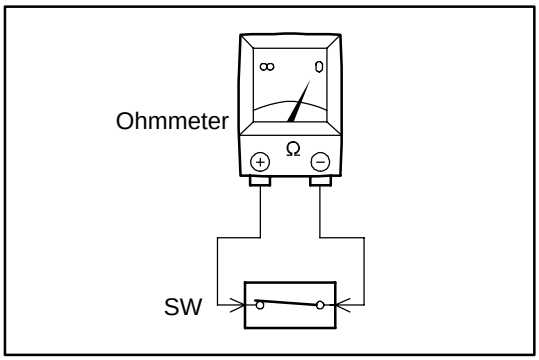

CONTINUITY AND RESISTANCE CHECK

(a) Disconnect the battery terminal or wire so there is no voltage between the check points.

(b) Contact the two leads of an ohmmeter to each of the check points.

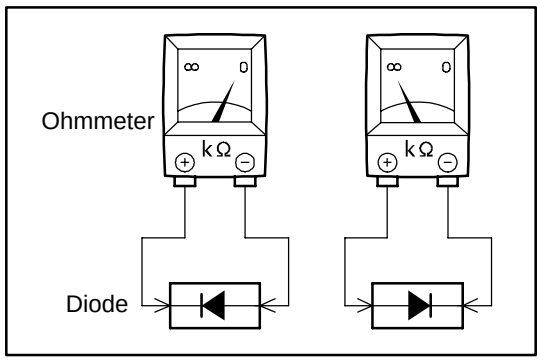

If the circuit has diodes, reverse the two leads and check again.
When contacting the negative lead to the diode positive side and the positive lead to the negative side, there should be continuity.
When contacting the two leads in reverse, there should be no continuity.

(c) Use a volt/ohmmeter with high impedance (10 kΩ/V minimum) for troubleshooting of the electrical circuit.

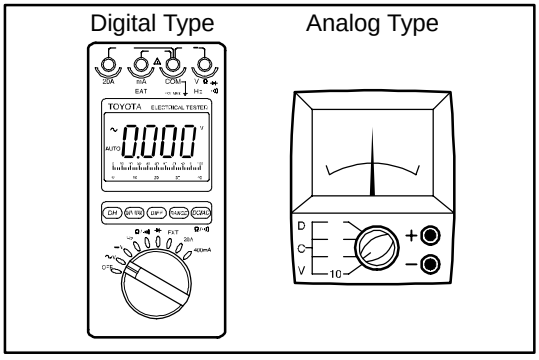

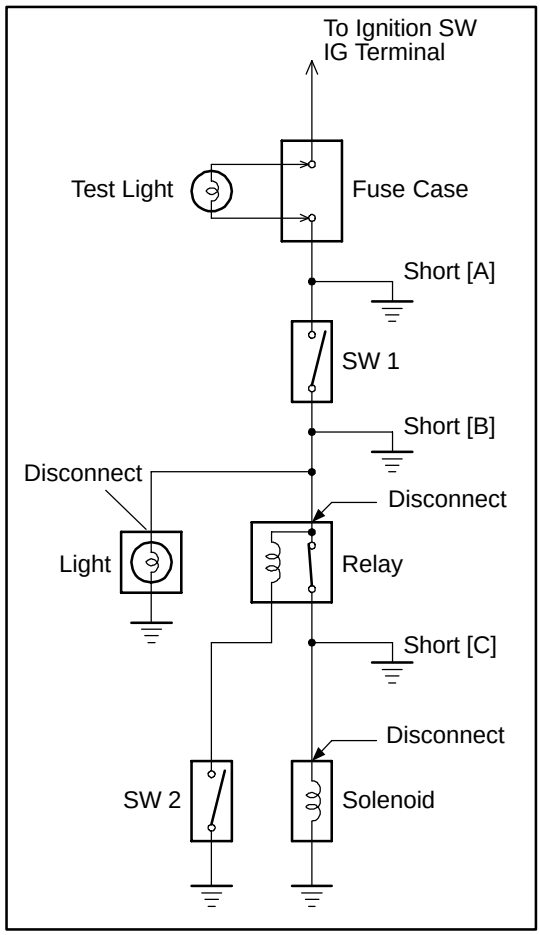

FINDING A SHORT CIRCUIT

(a) Remove the blown fuse and disconnect all loads of the fuse.

(b) Connect a test light in place of the fuse.

(c) Establish conditions in which the test light comes on.

Example:
[A] – Ignition SW on
[B] – Ignition SW and SW 1 on
[C] – Ignition SW, SW 1 and Relay on (Connect the Relay) and SW 2 off (or Disconnect SW 2)

(d) Disconnect and reconnect the connectors while watching the test light.
The short lies between the connector where the test light stays lit and the connector where the light goes out.

(e) Find the exact location of the short by lightly shaking the problem wire along the body.

CAUTION:

(a) Do not open the cover or the case of the ECU unless absolutely necessary. (If the IC terminals are touched, the IC may be destroyed by static electricity.)

(b) When replacing the internal mechanism (ECU part) of the digital meter, be careful that no part of your body or clothing comes in contact with the terminals of leads from the IC, etc. of the replacement part (spare part).

DISCONNECTION OF MALE AND FEMALE CONNECTORS

To pull apart the connectors, pull on the connector itself, not the wire harness.

HINT : Check to see what kind of connector you are disconnecting before pulling apart.

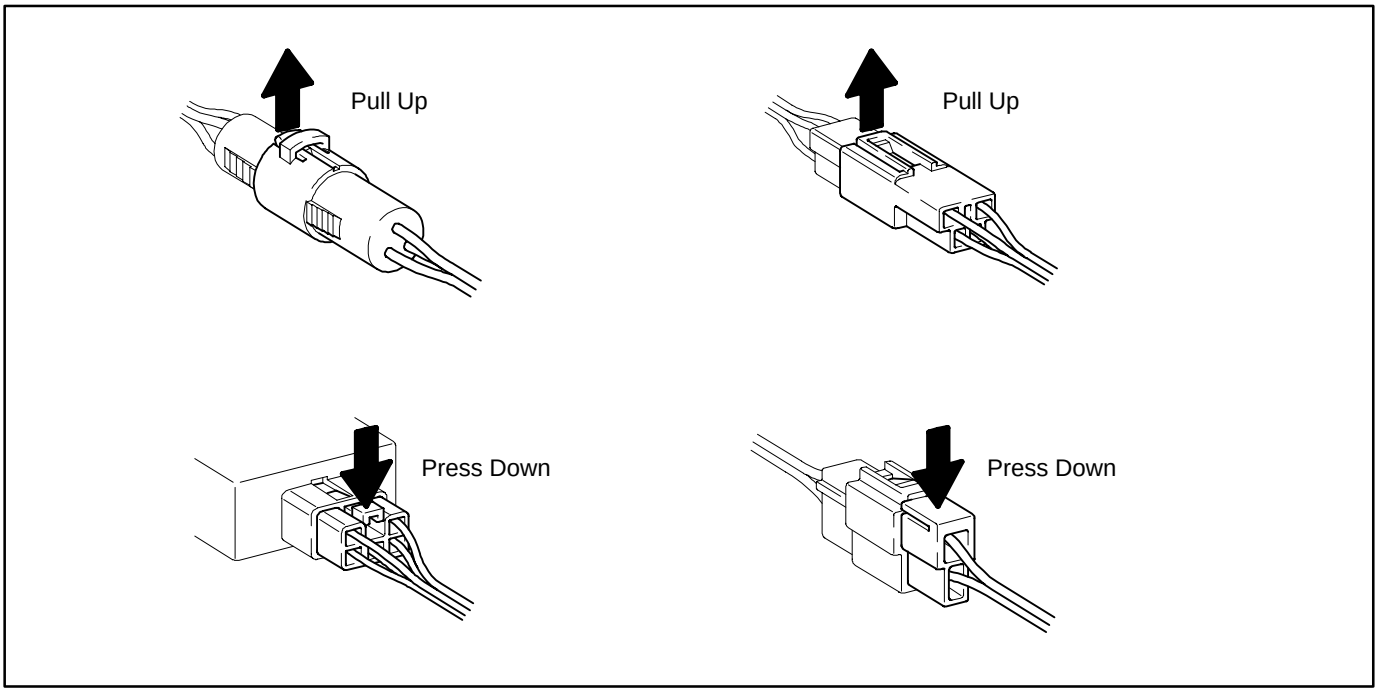

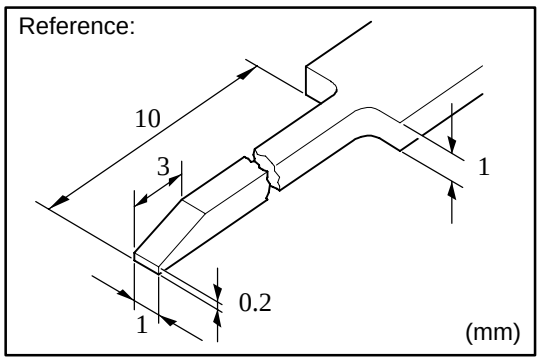

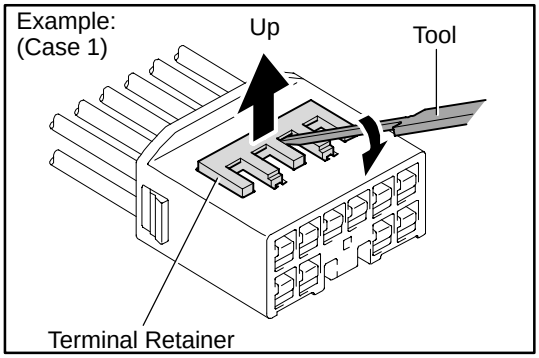

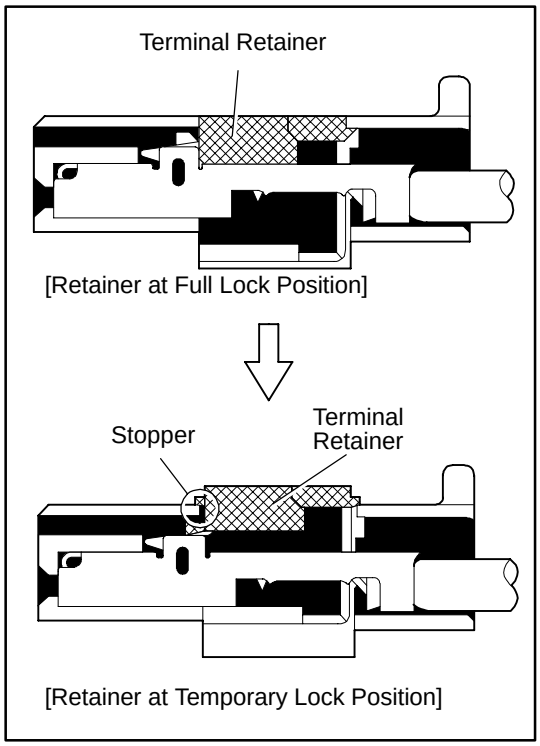

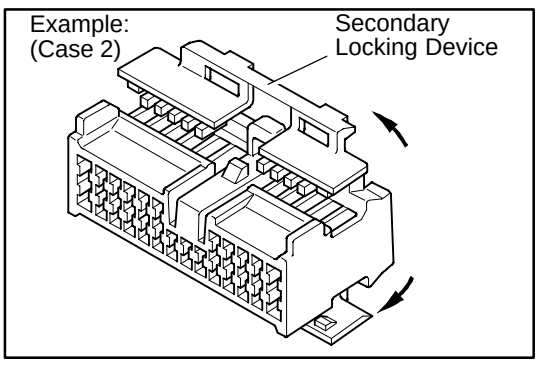

HOW TO REPLACE TERMINAL (with terminal retainer or secondary locking device)

1. PREPARE THE SPECIAL TOOL

   HINT : To remove the terminal from the connector, please construct and use the special tool or like object shown on the left.

2. DISCONNECT CONNECTOR

3. DISENGAGE THE SECONDARY LOCKING DEVICE OR TERMINAL RETAINER.

   (a) Locking device must be disengaged before the terminal locking clip can be released and the terminal removed from the connector.

   (b) Use a special tool or the terminal pick to unlock the secondary locking device or terminal retainer.

   NOTICE:
   Do not remove the terminal retainer from connector body.

   [A] For Non–Waterproof Type Connector

   HINT : The needle insertion position varies according to the connector's shape (number of terminals etc.), so check the position before inserting it.

   "Case 1"

   Raise the terminal retainer up to the temporary lock position.

   "Case 2"

   Open the secondary locking device.

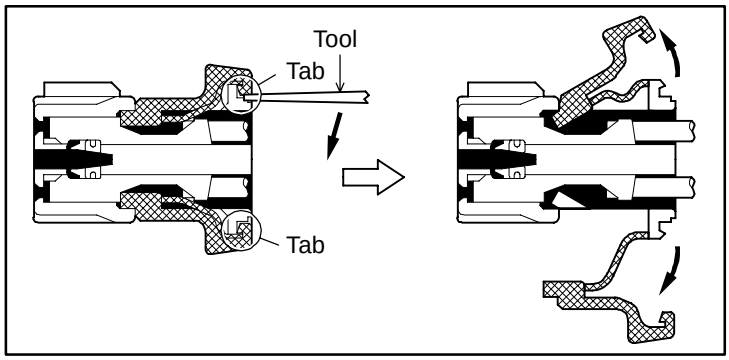

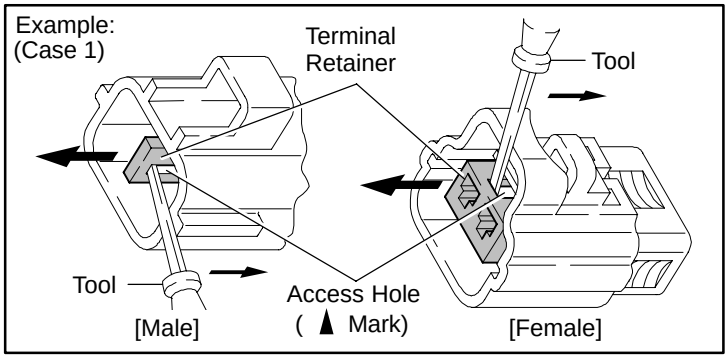

[B] For Waterproof Type Connector

HINT : Terminal retainer color is different according to connector body.

Example:

Terminal Retainer	: Connector Body
Black or White	: Gray
Black or White	: Dark Gray
Gray or White	: Black

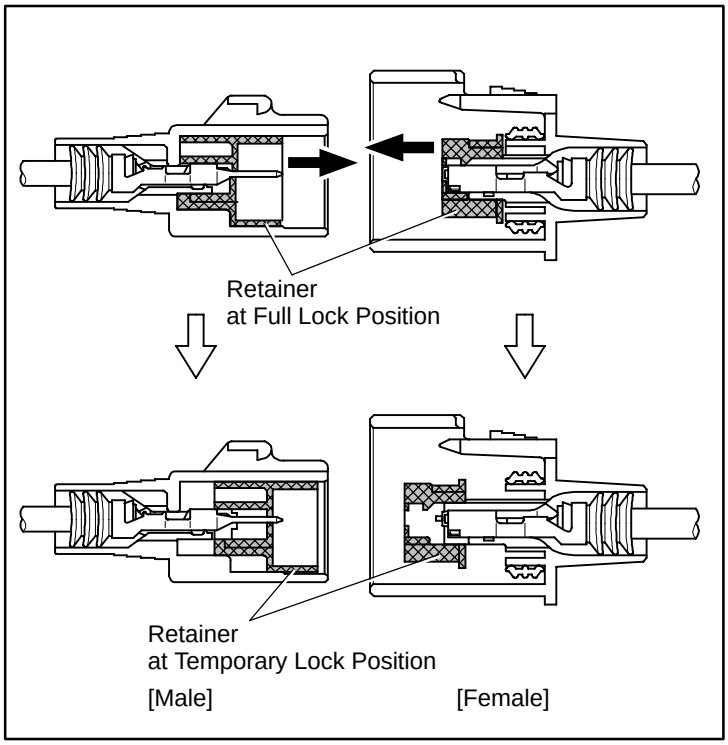

”Case 1”

Type where terminal retainer is pulled up to the temporary lock position (Pull Type).

Insert the special tool into the terminal retainer access hole (▲Mark) and pull the terminal retainer up to the temporary lock position.

HINT : The needle insertion position varies according to the connector’s shape (Number of terminals etc.), so check the position before inserting it.

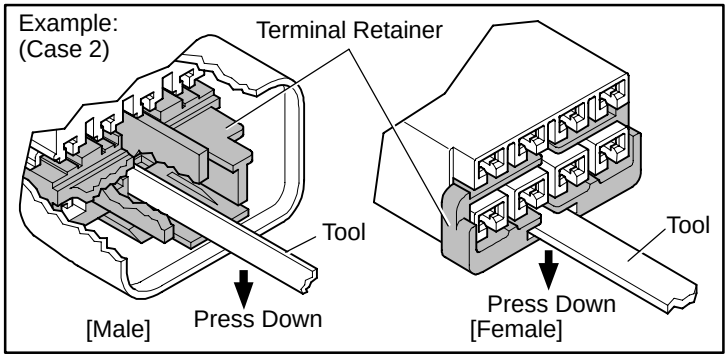

”Case 2”

Type which cannot be pulled as far as Power Lock insert the tool straight into the access hole of terminal retainer as shown.

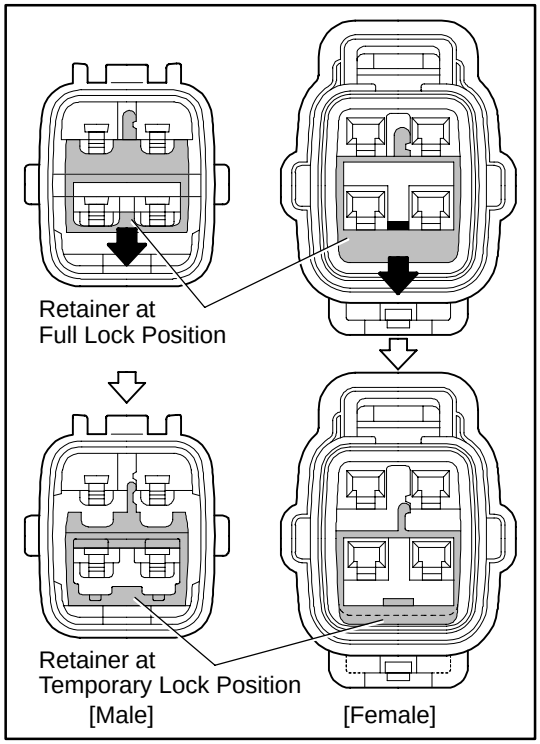

Push the terminal retainer down to the temporary lock position.

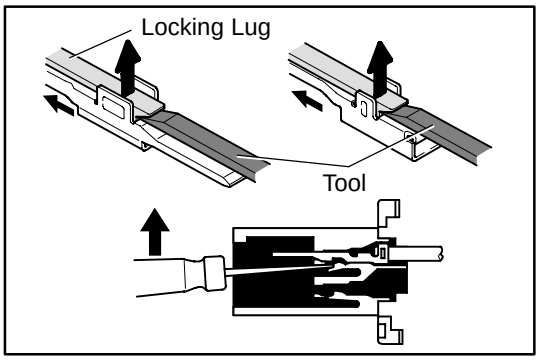

(c) Release the locking lug from terminal and pull the terminal out from rear.

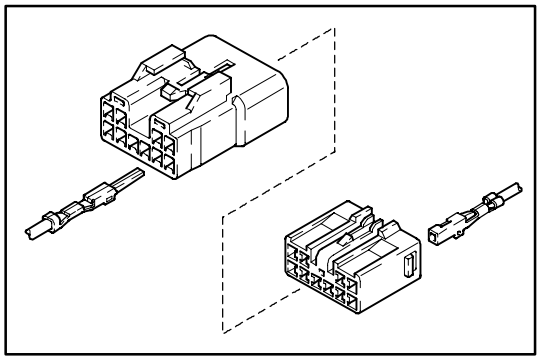

4. INSTALL TERMINAL TO CONNECTOR

(a) Insert the terminal.

HINT:
1. Make sure the terminal is positioned correctly.
2. Insert the terminal until the locking lug locks firmly.
3. Insert the terminal with terminal retainer in the temporary lock position.

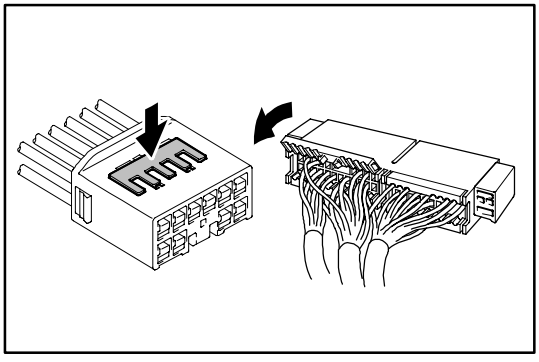

(b) Push the secondary locking device or terminal retainer in to the full lock position.

5. CONNECT CONNECTOR

ABBREVIATIONS

The following abbreviations are used in this manual.

ABS	=	Anti–Lock Brake System
A/C	=	Air Conditioning
COMB.	=	Combination
DC	=	Direct Current
ECU	=	Electronic Control Unit
EMPS	=	Electric Motor Power Steering
ESA	=	Electronic Spark Advance
EVAP	=	Evaporative Emission
HV	=	Hybrid Vehicle
J/B	=	Junction Block
LH	=	Left–Hand
PTC	=	Positive Temperature Coefficient
R/B	=	Relay Block
RH	=	Right–Hand
SFI	=	Sequential Multiport Fuel Injection
SRS	=	Supplemental Restraint System
SW	=	Switch
TEMP.	=	Temperature
VSV	=	Vacuum Switching Valve
w/	=	With
w/o	=	Without

* The titles given inside the components are the names of the terminals (terminal codes) and are not treated as being abbreviations.

E GLOSSARY OF TERMS AND SYMBOLS

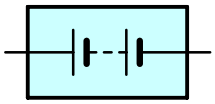

BATTERY
Stores chemical energy and converts it into electrical energy. Provides DC current for the auto's various electrical circuits.

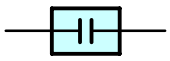

CAPACITOR (Condenser)
A small holding unit for temporary storage of electrical voltage.

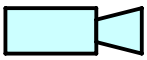

CIGARETTE LIGHTER
An electric resistance heating element.

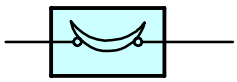

CIRCUIT BREAKER
Basically a reusable fuse, a circuit breaker will heat and open if too much current flows through it. Some units automatically reset when cool, others must be manually reset.

DIODE
A semiconductor which allows current flow in only one direction.



DIODE, ZENER
A diode which allows current flow in one direction but blocks reverse flow only up to a specific voltage. Above that potential, it passes the excess voltage. This acts as a simple voltage regulator.

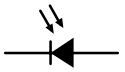

PHOTODIODE
The photodiode is a semiconductor which controls the current flow according to the amount of light.

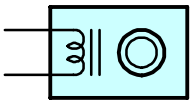

DISTRIBUTOR, IIA
Channels high–voltage current from the ignition coil to the individual spark plugs.

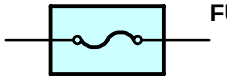

FUSE
A thin metal strip which burns through when too much current flows through it, thereby stopping current flow and protecting a circuit from damage.

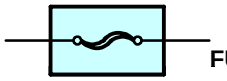

(for Medium Current Fuse)

FUSIBLE LINK
A heavy–gauge wire placed in high amperage circuits which burns through on overloads, thereby protecting the circuit. The numbers indicate the crosssection surface area of the wires.

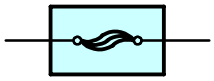

(for High Current Fuse or Fusible Link)



GROUND
The point at which wiring attaches to the Body, thereby providing a return path for an electrical circuit; without a ground, current cannot flow.

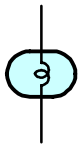

1. SINGLE FILAMENT



2. DOUBLE FILAMENT

HEADLIGHTS
Current flow causes a headlight filament to heat up and emit light. A headlight may have either a single (1) filament or a double (2) filament

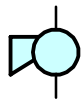

HORN
An electric device which sounds a loud audible signal.

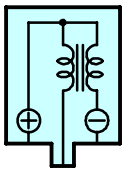

IGNITION COIL
Converts low–voltage DC current into high–voltage ignition current for firing the spark plugs.



LIGHT
Current flow through a filament causes the filament to heat up and emit light.



LED (LIGHT EMITTING DIODE)
Upon current flow, these diodes emit light without producing the heat of a comparable light.



METER, ANALOG
Current flow activates a magnetic coil which causes a needle to move, thereby providing a relative display against a background calibration.



METER, DIGITAL
Current flow activates one or many LED's, LCD's, or fluorescent displays, which provide a relative or digital display.



MOTOR
A power unit which converts electrical energy into mechanical energy, especially rotary motion.

RELAY

Basically, an electrically operated switch which may be normally closed (1) or open (2). Current flow through a small coil creates a magnetic field which either opens or closes an attached switch.

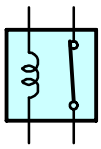

1. NORMALLY CLOSED

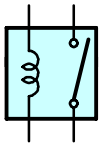

2. NORMALLY OPEN

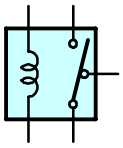

RELAY, DOUBLE THROW

A relay which passes current through one set of contacts or the other.

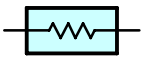

RESISTOR

An electrical component with a fixed resistance, placed in a circuit to reduce voltage to a specific value.

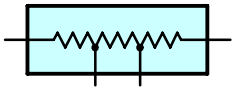

RESISTOR, TAPPED

A resistor which supplies two or more different non adjustable resistance values.



RESISTOR, VARIABLE or RHEOSTAT

A controllable resistor with a variable rate of resistance.
Also called a potentiometer or rheostat.

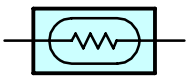

SENSOR (Thermistor)

A resistor which varies its resistance with temperature.

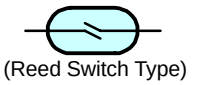

(Reed Switch Type)

SENSOR, SPEED

Uses magnetic impulses to open and close a switch to create a signal for activation of other components.

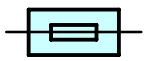

SHORT PIN

Used to provide an unbroken connection within a junction block.

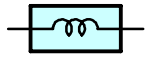

SOLENOID

An electromagnetic coil which forms a magnetic field when current flows, to move a plunger, etc.



SPEAKER

An electromechanical device which creates sound waves from current flow.

SWITCH, MANUAL

Opens and closes circuits, thereby stopping (1) or allowing (2) current flow.

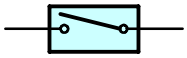

1. NORMALLY OPEN

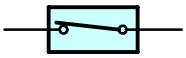

2. NORMALLY CLOSED

SWITCH, DOUBLE THROW

A switch which continuously passes current through one set of contacts or the other.

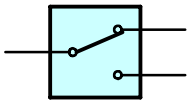

SWITCH, IGNITION

A key operated switch with several positions which allows various circuits, particularly the primary ignition circuit, to become operational.

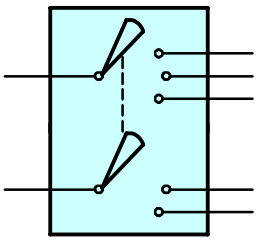

SWITCH, WIPER PARK

Automatically returns wipers to the stop position when the wiper switch is turned off.

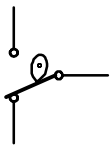

TRANSISTOR

A solidstate device typically used as an electronic relay; stops or passes current depending on the voltage applied at "base".

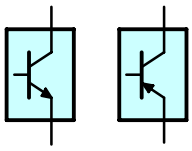

WIRES

Wires are always drawn as straight lines on wiring diagrams.
Crossed wires (1) without a black dot at the junction are not joined;
crossed wires (2) with a black dot or octagonal ( ) mark at the junction are spliced (joined) connections.

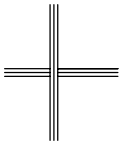

(1) NOT CONNECTED

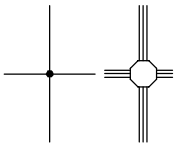

(2) SPLICED

F RELAY LOCATIONS

[Engine Compartment]

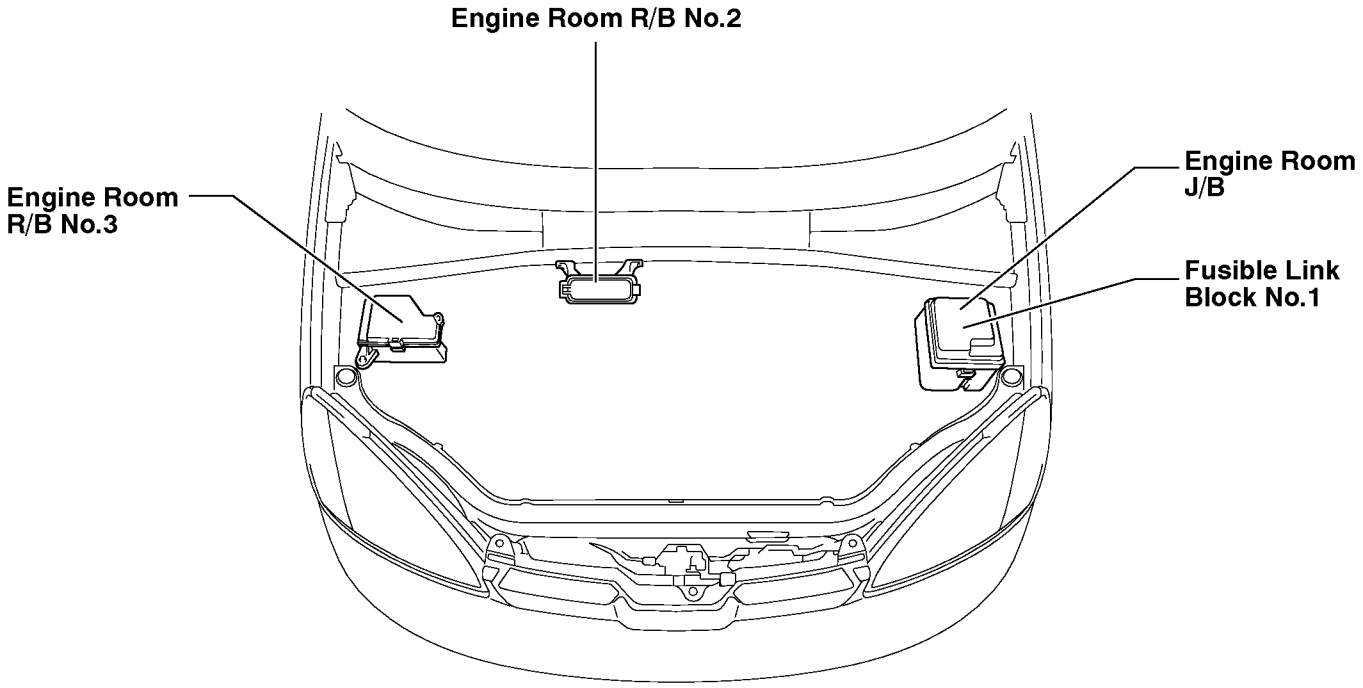

[Instrument Panel]

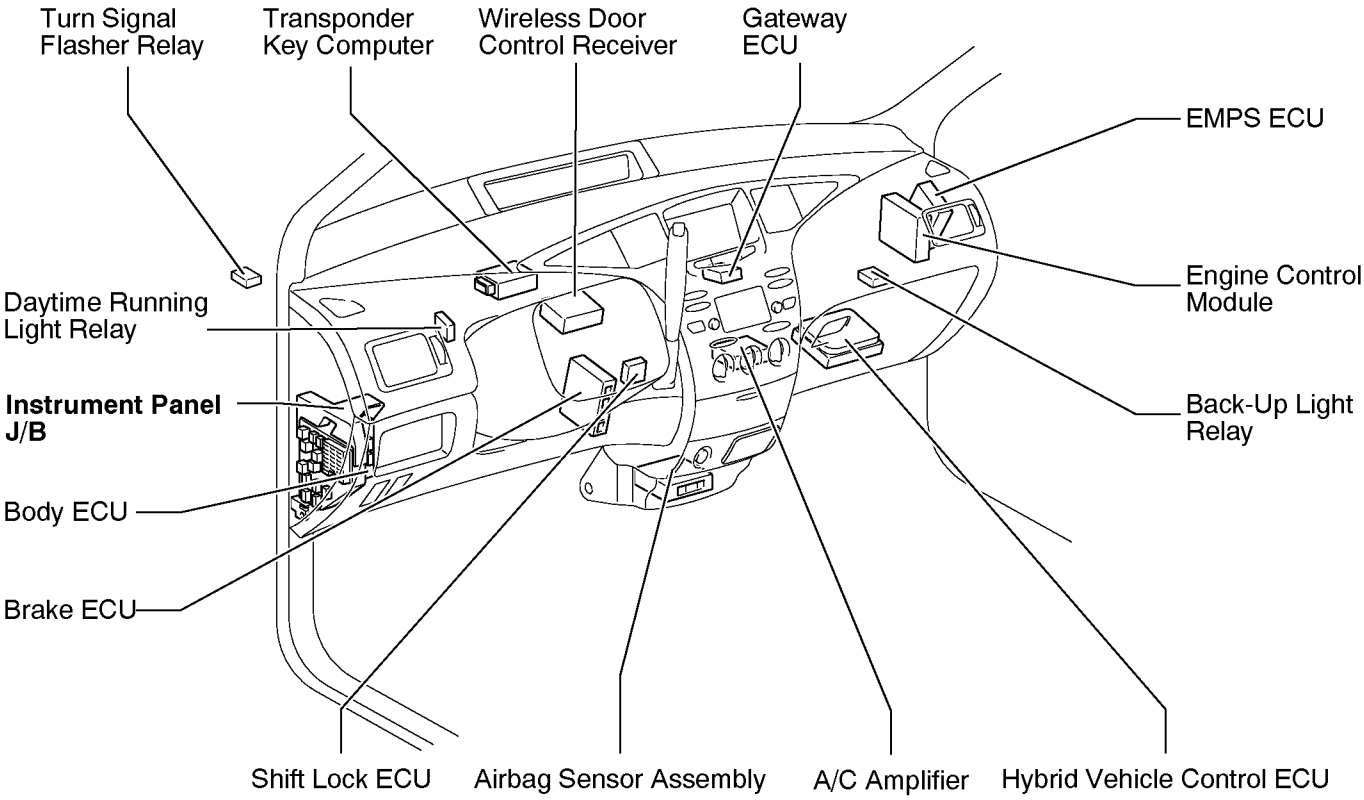

[Body]

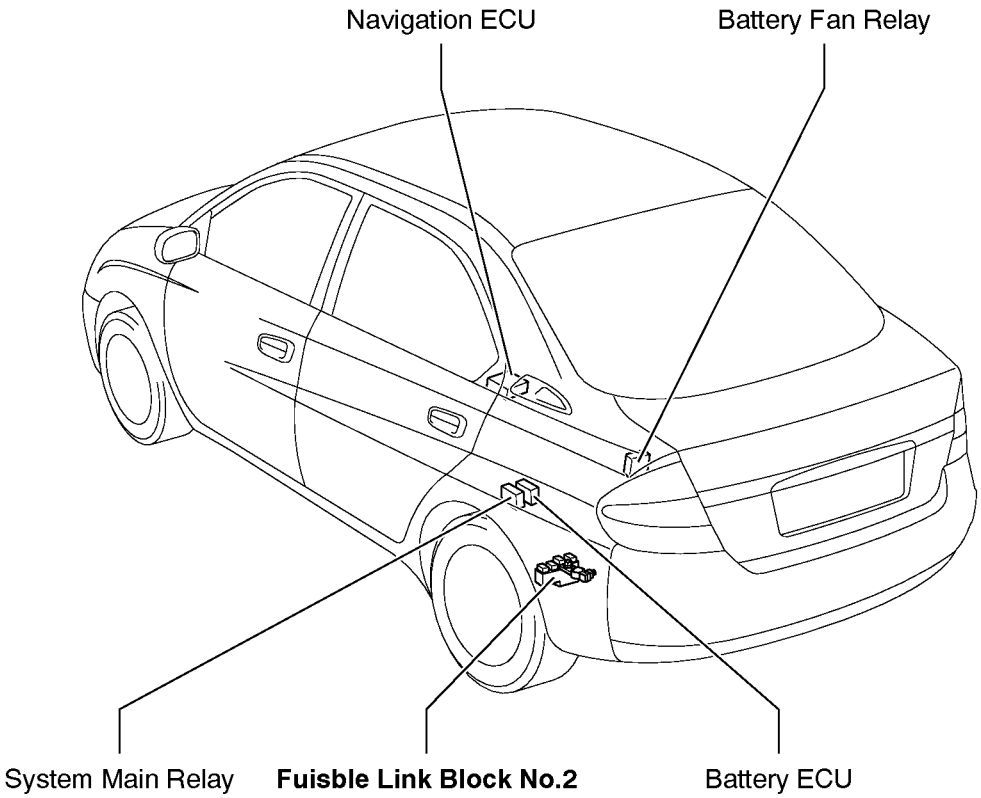
Navigation ECU
Battery Fan Relay
System Main Relay
Fuisble Link Block No.2
Battery ECU

F RELAY LOCATIONS

Fusible Link Block No.1	Engine Compartment Left (See Page 20)

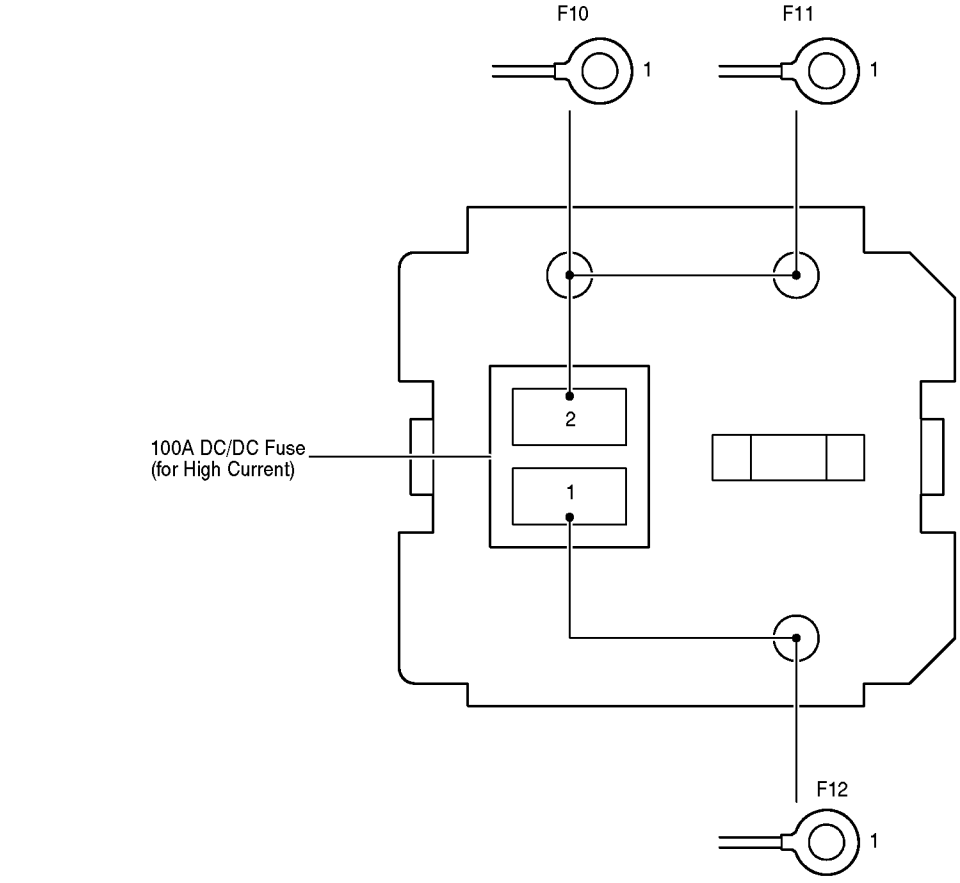

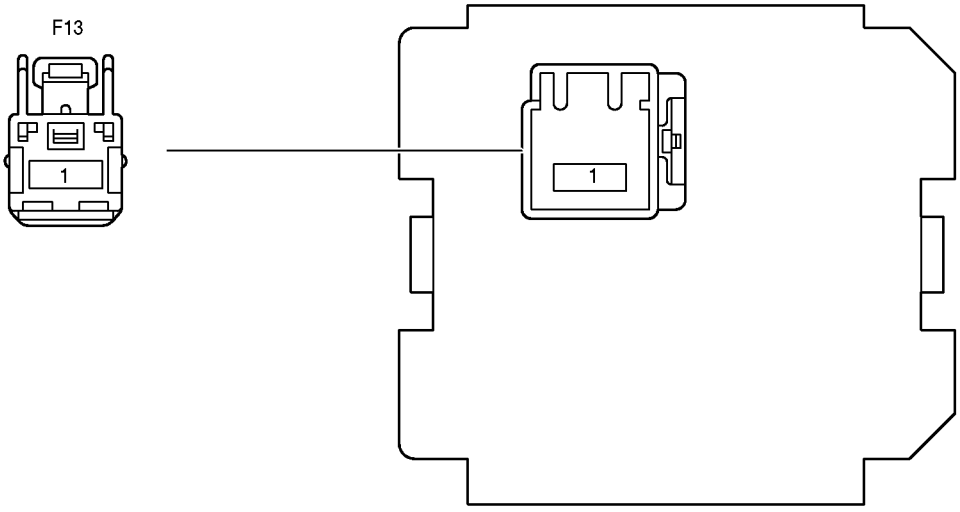

Fusible Link Block No.2	Luggage Room Left (See Page 21)

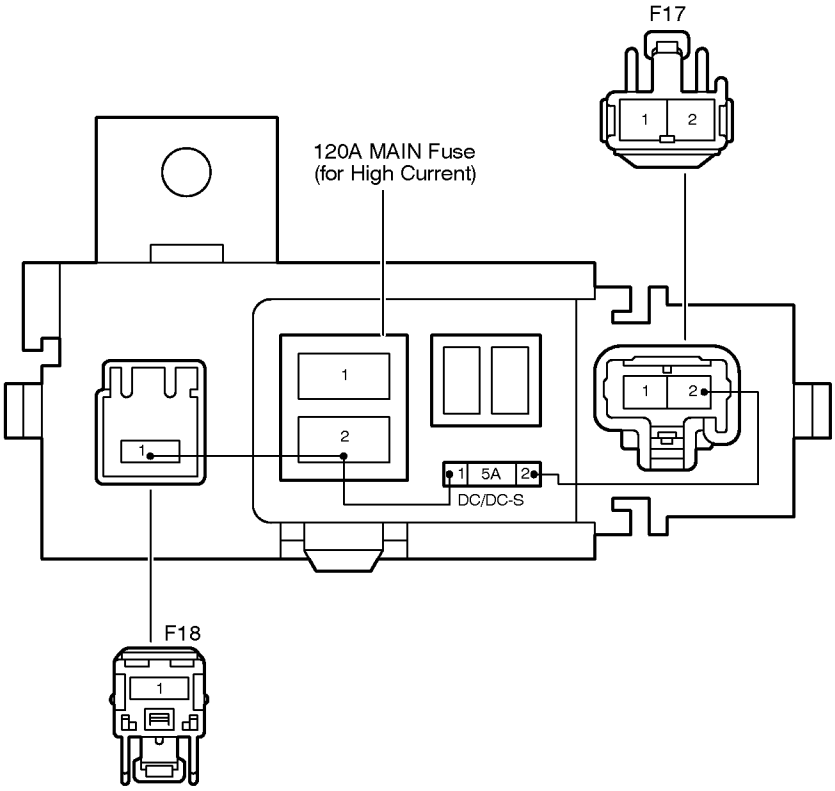

② : Engine Room R/B No.2	Right Side of Reserve Tank (See Page 20)

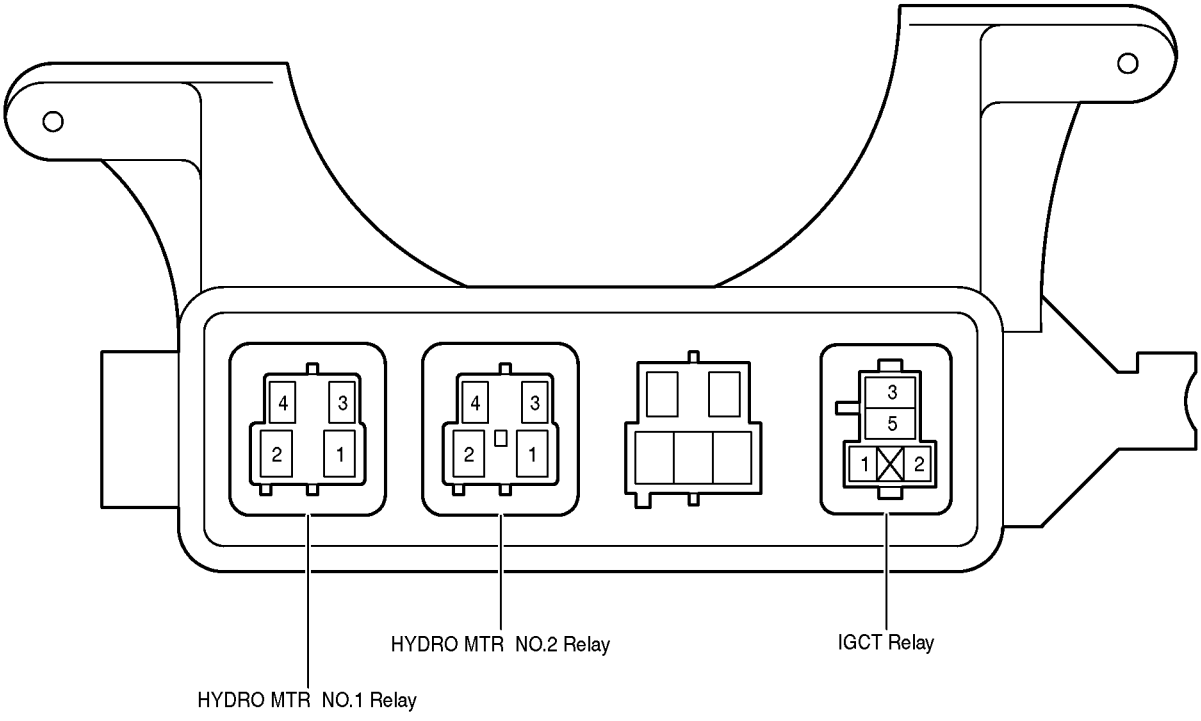

F RELAY LOCATIONS

③ : Engine Room R/B No.3	Engine Compartment Right (See Page 20)

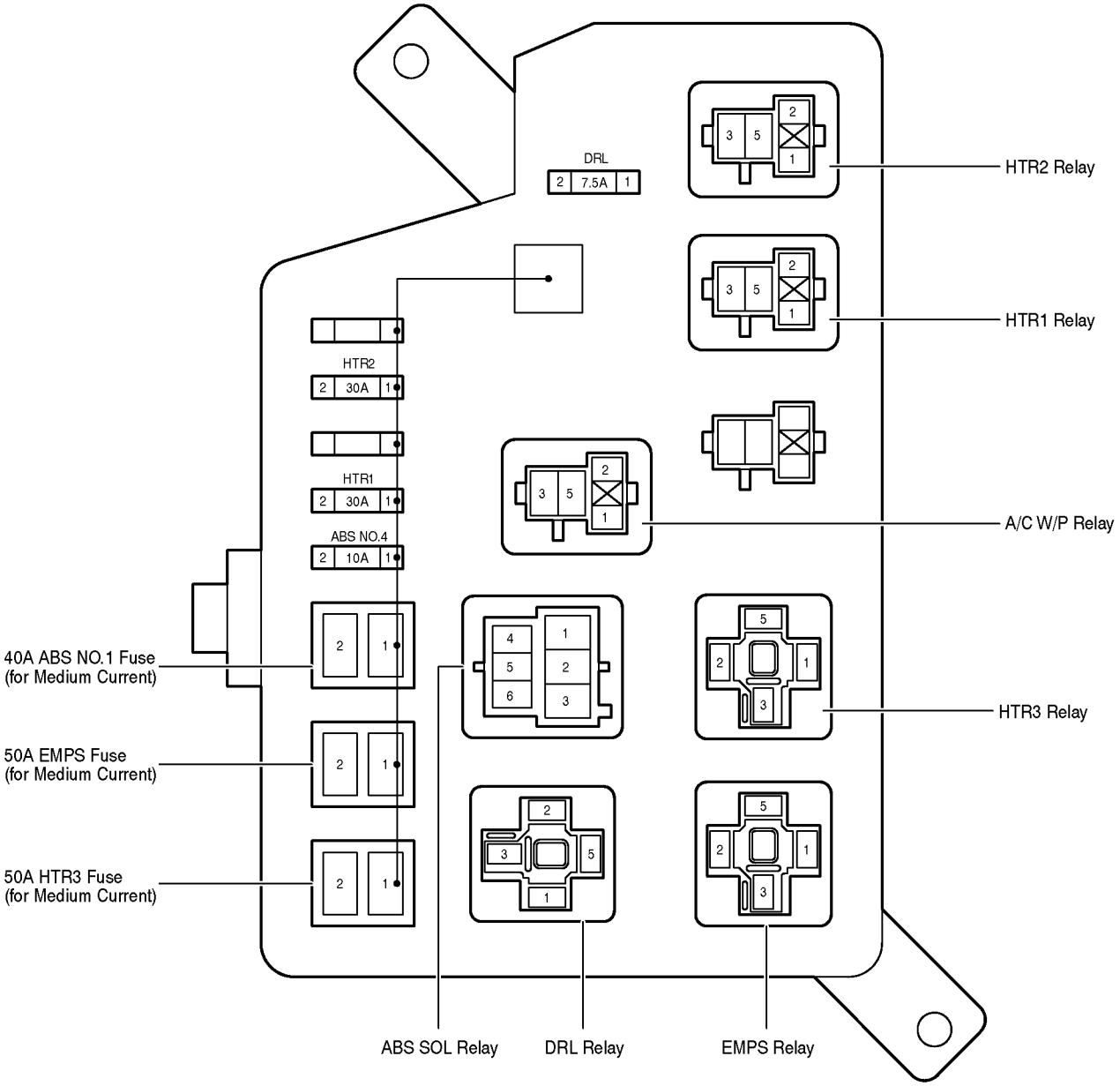

F RELAY LOCATIONS

: Engine Room J/B	Engine Compartment Left (See Page 20)

∗1 : HEAD LO (LH) (w/ Daytime Running Light)
HEAD (LH) (w/o Daytime Running Light)
∗2 : HEAD LO (RH) (w/ Daytime Running Light)
HEAD (RH) (w/o Daytime Running Light)
∗3 : w/ Daytime Running Light
∗4 : w/o Daytime Running Light

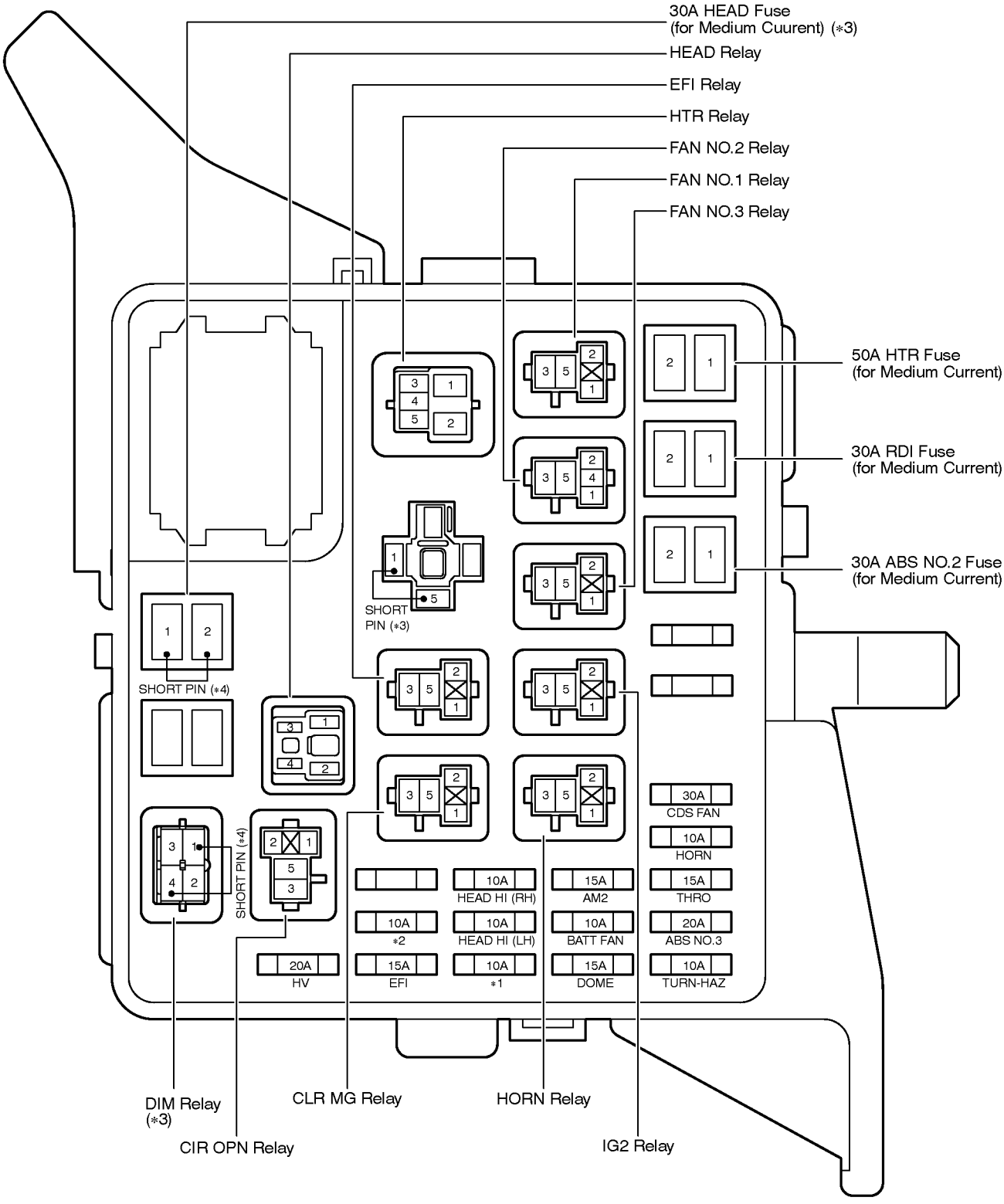

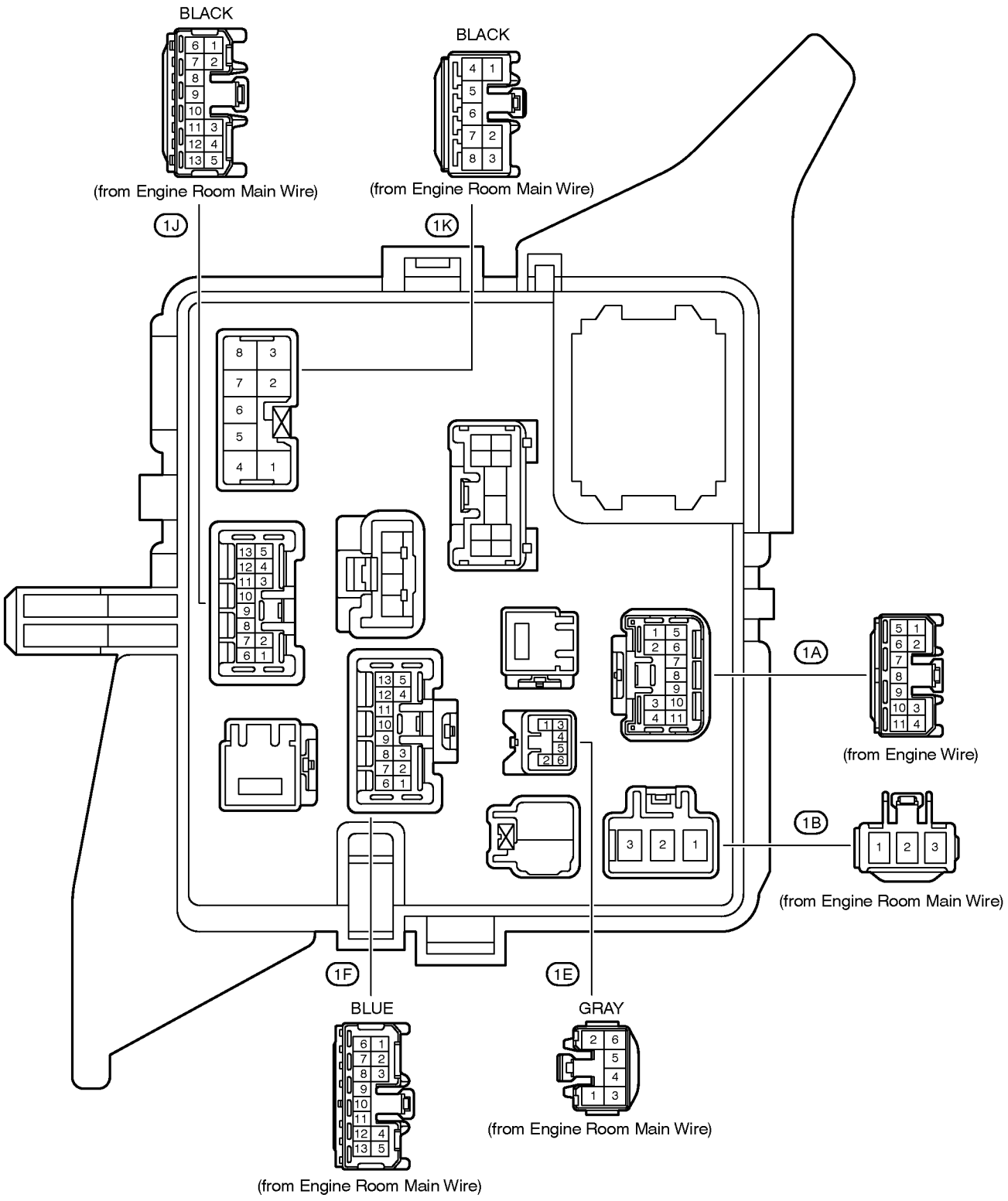
BLACK
(from Engine Room Main Wire)
BLACK
(from Engine Room Main Wire)
1J
1K
1A
(from Engine Wire)
1B
(from Engine Room Main Wire)
1F
1E
BLUE
(from Engine Room Main Wire)
GRAY
(from Engine Room Main Wire)

F RELAY LOCATIONS

[Engine Room J/B Inner Circuit]

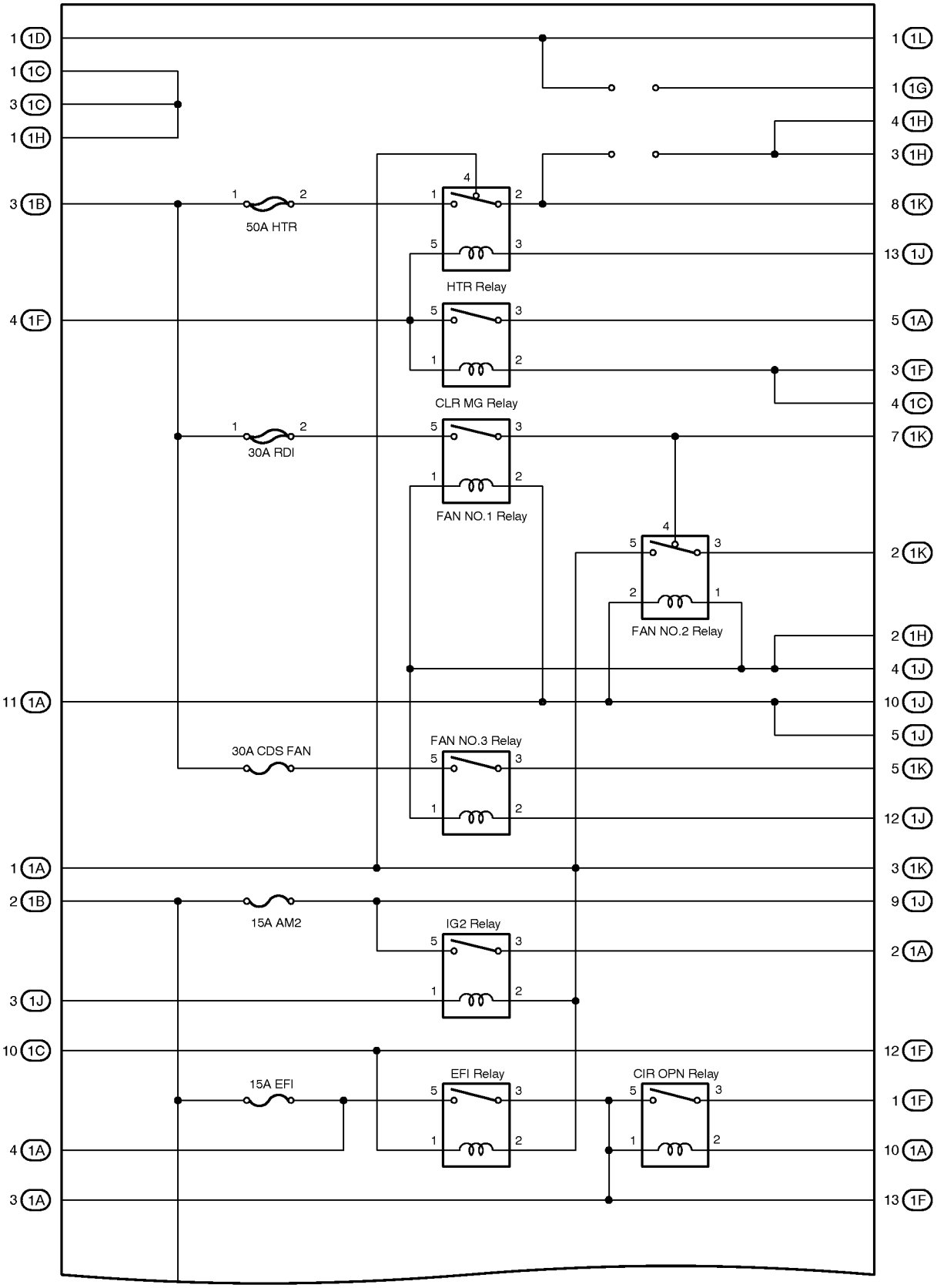

(Cont. next page)

(Cont'd)

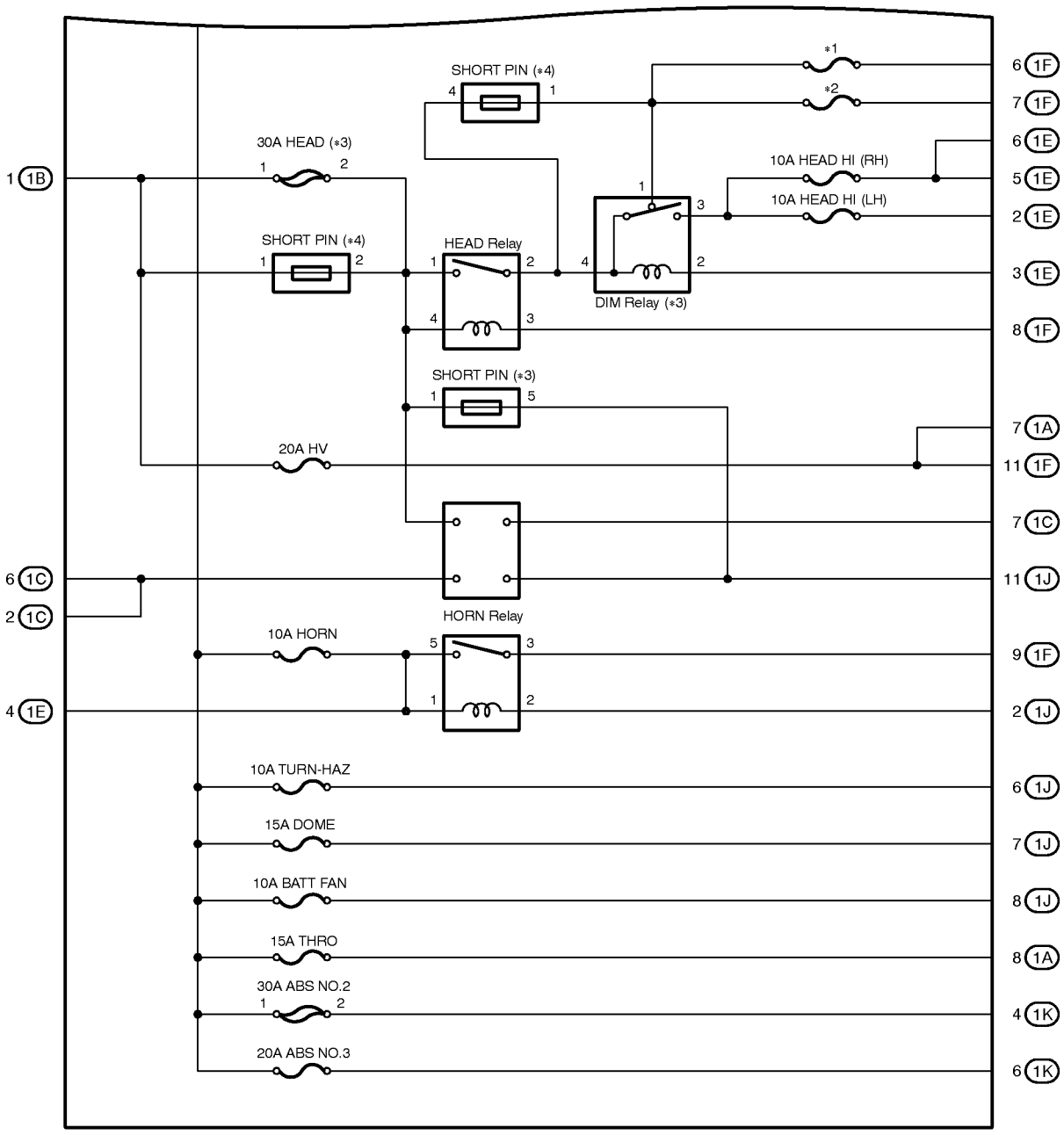

*1 : 10A HEAD LO (LH) (w/ Daytime Running Light)
10A HEAD (LH) (w/o Daytime Running Light)
*2 : 10A HEAD LO (RH) (w/ Daytime Running Light)
10A HEAD (RH) (w/o Daytime Running Light)
*3 : w/ Daytime Running Light
*4 : w/o Daytime Running Light

F RELAY LOCATIONS

: Instrument Panel J/B	Cowl Side Panel LH (See Page 20)

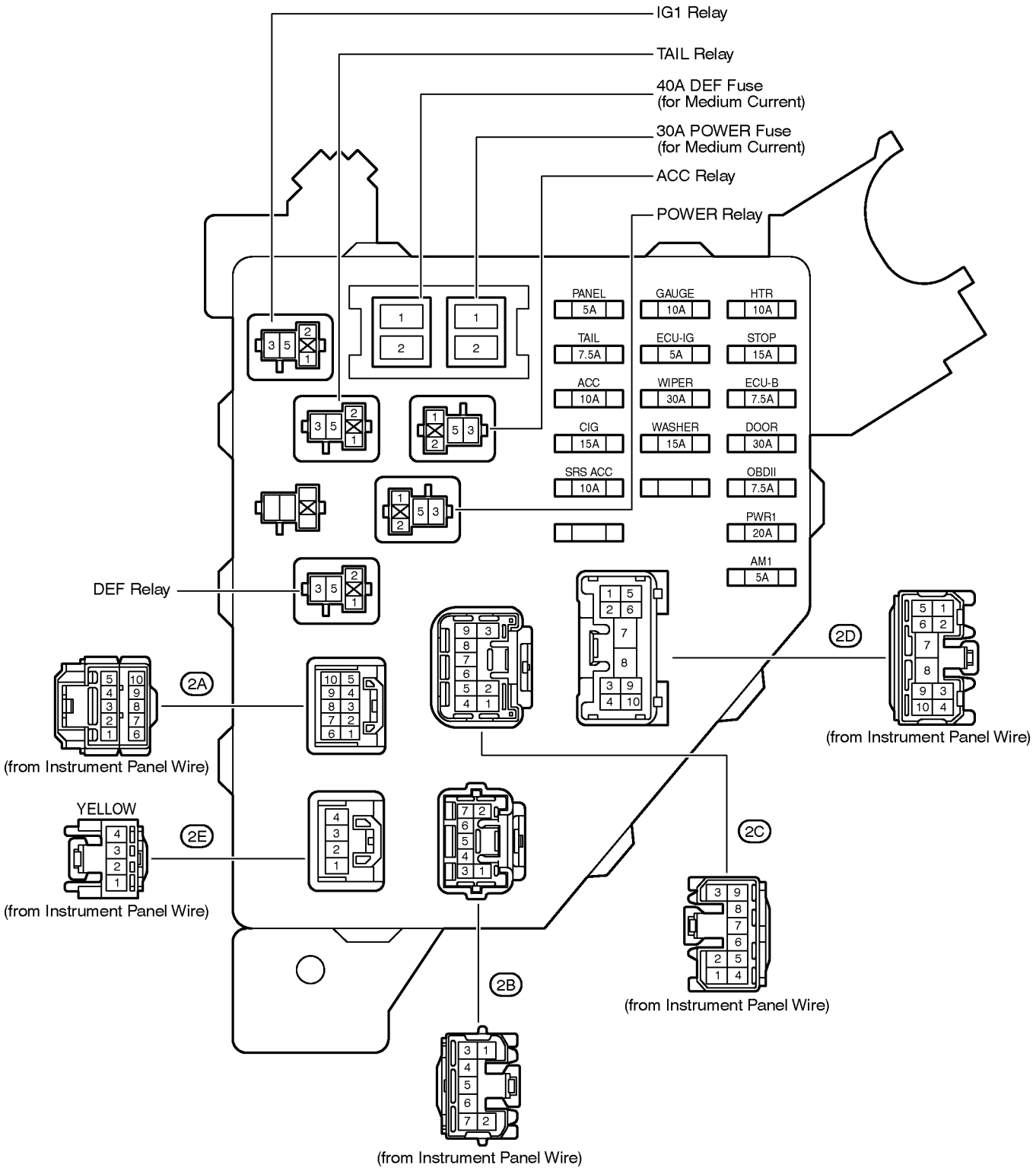

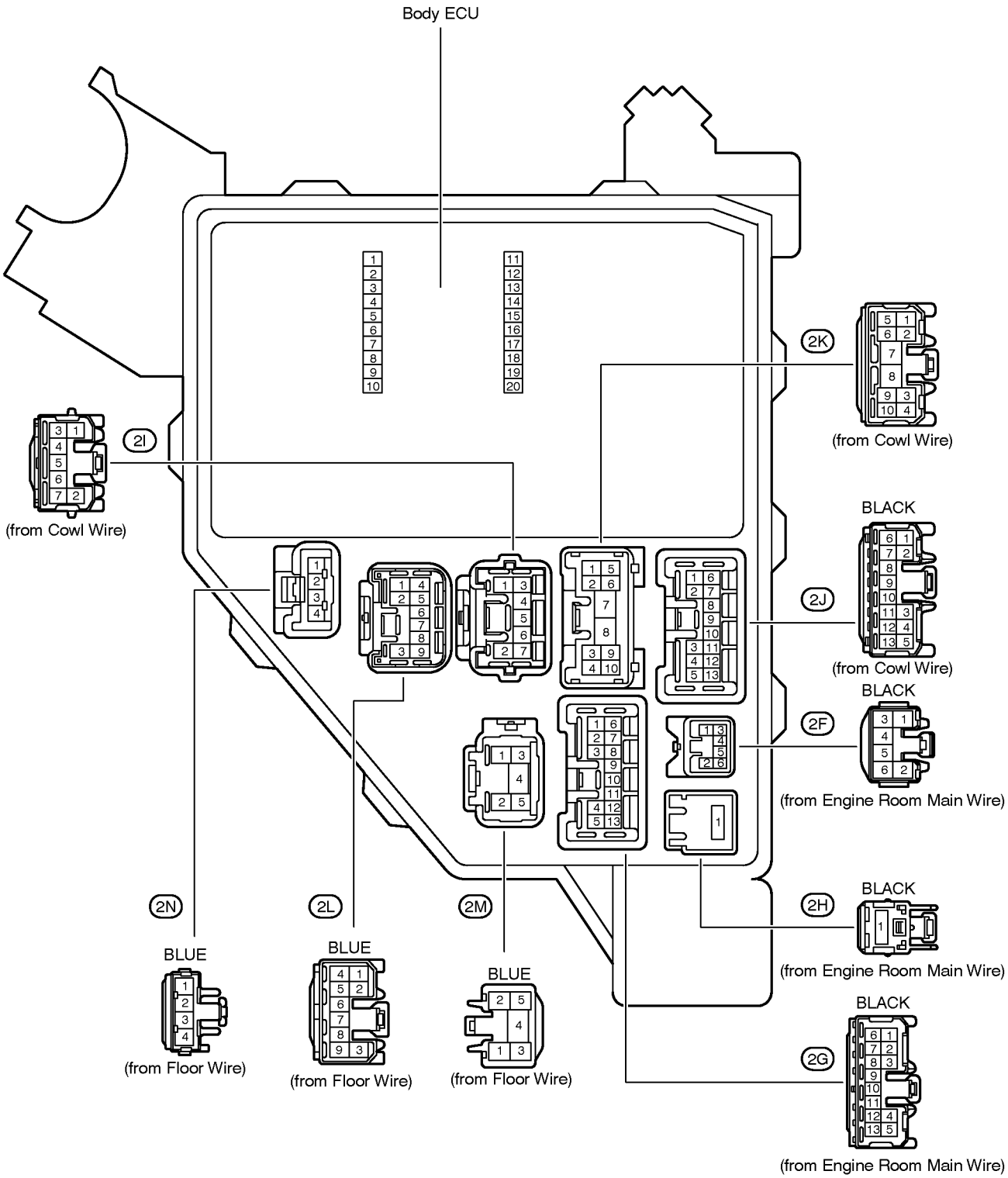
Body ECU
2I
(from Cowl Wire)
2K
(from Cowl Wire)
BLACK
2J
(from Cowl Wire)
BLACK
2F
(from Engine Room Main Wire)
BLACK
2H
(from Engine Room Main Wire)
BLACK
2G
(from Engine Room Main Wire)
2N
BLUE
(from Floor Wire)
2L
BLUE
(from Floor Wire)
2M
BLUE
(from Floor Wire)

F RELAY LOCATIONS

[Instrument Panel J/B Inner Circuit]

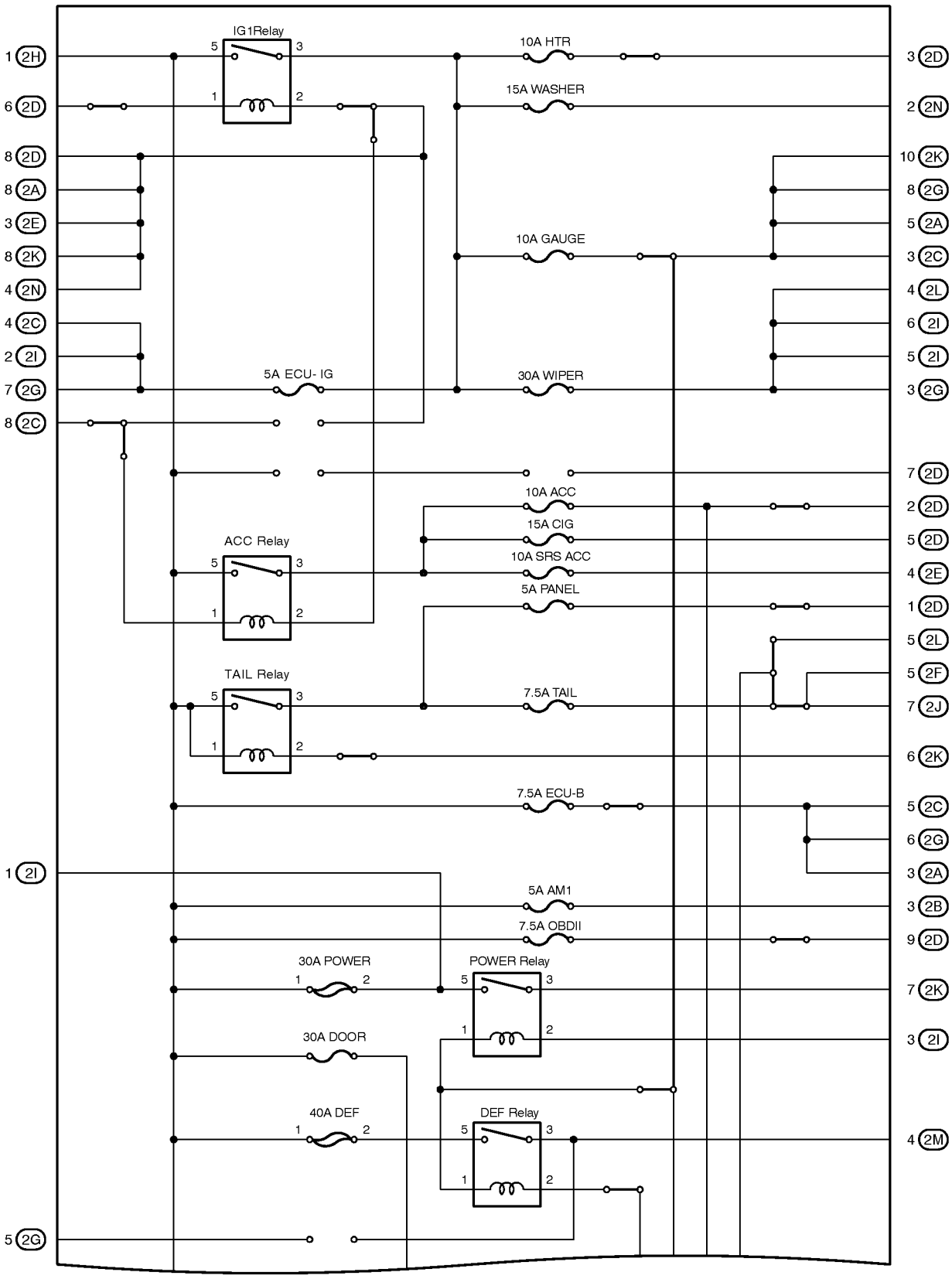

(Cont. next page)

(Cont'd)

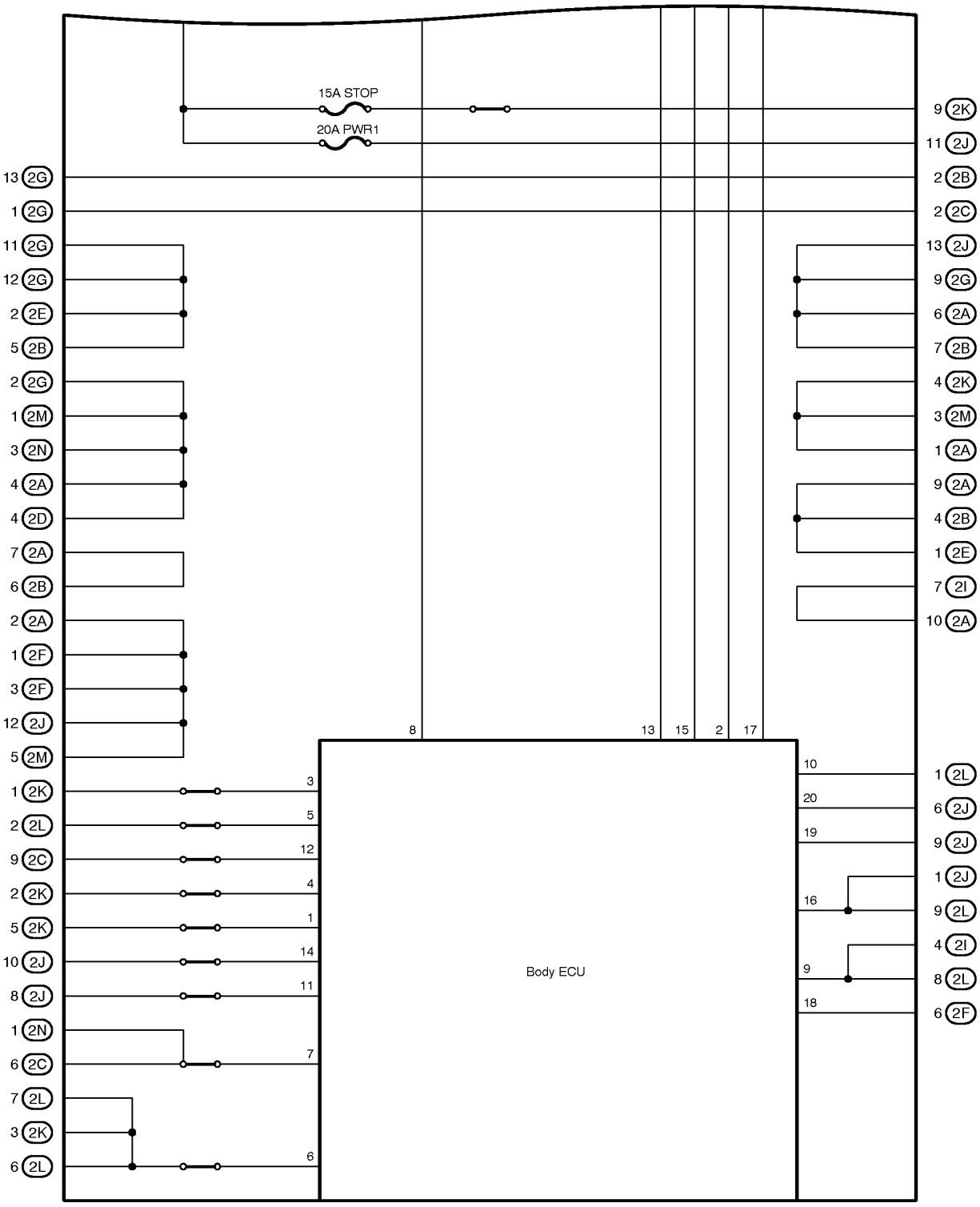
15A STOP
20A PWR1
13 2G
1 2G
11 2G
12 2G
2 2E
5 2B
2 2G
1 2M
3 2N
4 2A
4 2D
7 2A
6 2B
2 2A
1 2F
3 2F
12 2J
5 2M
1 2K
2 2L
9 2C
2 2K
5 2K
10 2J
8 2J
1 2N
6 2C
7 2L
3 2K
6 2L
3
5
12
4
1
14
11
7
6
8
13
15
2
17
Body ECU
10
20
19
16
9
18
9 2K
11 2J
2 2B
2 2C
13 2J
9 2G
6 2A
7 2B
4 2K
3 2M
1 2A
9 2A
4 2B
1 2E
7 2I
10 2A
1 2L
6 2J
9 2J
1 2J
9 2L
4 2I
8 2L
6 2F

G ELECTRICAL WIRING ROUTING

Position of Parts in Engine Compartment

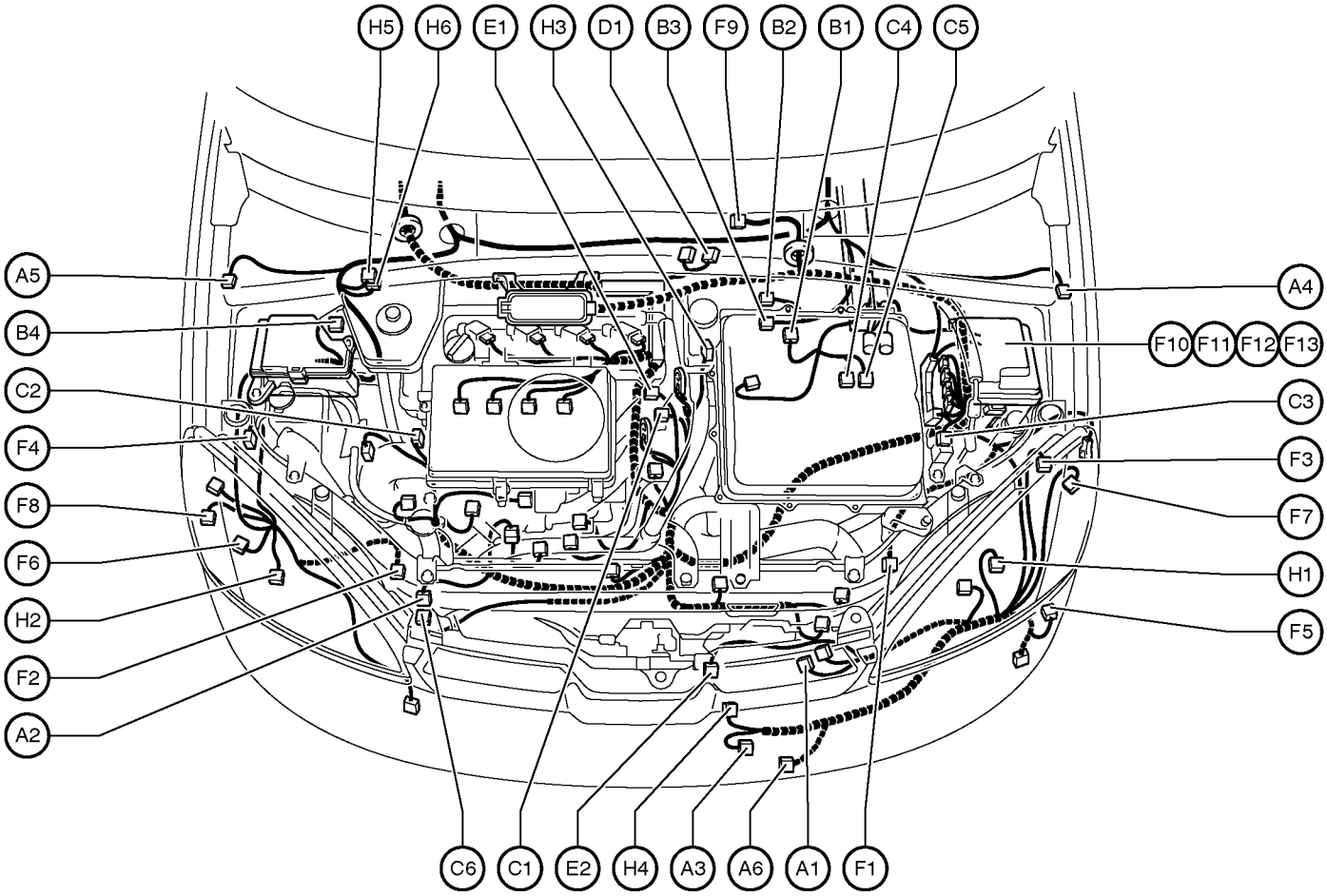

A 1 A/C Condenser Fan Motor
A 2 A/C Magnetic Clutch and Lock Sensor
A 3 A/C Triple Pressure SW
(A/C Dual and Single Pressure SW)
A 4 ABS Speed Sensor Front LH
A 5 ABS Speed Sensor Front RH
A 6 Ambient Temp. Sensor

B 1 Brake Actuator
B 2 Brake Actuator
B 3 Brake Actuator
B 4 Brake Fluid Level Warning SW

C 1 Camshaft Position Sensor
C 2 Camshaft Timing Oil Control Valve
C 3 Circuit Breaker Sensor
C 4 Converter
C 5 Converter
C 6 Crankshaft Position Sensor

D 1 DC Motor

E 1 Engine Coolant Temp. Sensor
E 2 Engine Hood Courtesy SW

F 1 Front Airbag Sensor LH
F 2 Front Airbag Sensor RH
F 3 Front Parking Light LH
F 4 Front Parking Light RH
F 5 Front Side Marker Light LH
F 6 Front Side Marker Light RH
F 7 Front Turn Signal Light LH
F 8 Front Turn Signal Light RH
F 9 Front Wiper Motor
F 10 Fusible Link Block No.1
F 11 Fusible Link Block No.1
F 12 Fusible Link Block No.1
F 13 Fusible Link Block No.1

H 1 Headlight LH
H 2 Headlight RH
H 3 Heated Oxygen Sensor (Bank 1 Sensor1)
H 4 Horn
H 5 Hydraulic Booster
H 6 Hydraulic Booster

Position of Parts in Engine Compartment

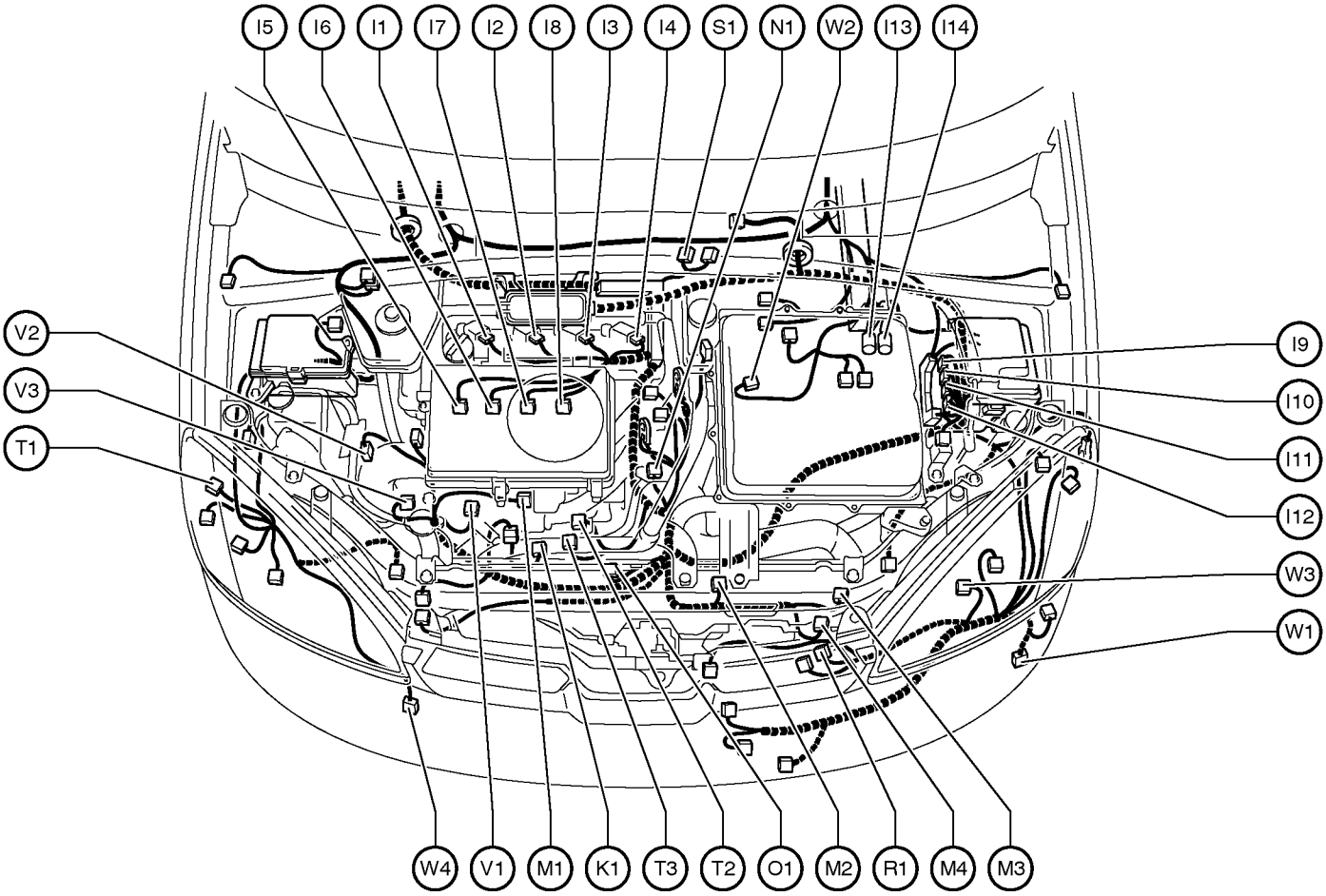

I 1 Ignition Coil and Igniter No.1
I 2 Ignition Coil and Igniter No.2
I 3 Ignition Coil and Igniter No.3
I 4 Ignition Coil and Igniter No.4
I 5 Injector No.1
I 6 Injector No.2
I 7 Injector No.3
I 8 Injector No.4
I 9 Inverter
I 10 Inverter
I 11 Inverter
I 12 Inverter
I 13 Inverter
I 14 Inverter

K 1 Knock Sensor

M 1 Mass Air Flow Meter
M 2 Motor Generator No.1
M 3 Motor Generator No.2
M 4 Motor Generator No.2

N 1 Noise Filter (Ignition)

O 1 Oil Pressure SW

R 1 Radiator Fan Motor

S 1 Steering Shaft Torque Sensor

T 1 Theft Deterrent Horn
T 2 Throttle Control Motor
T 3 Throttle Position Sensor

V 1 Vacuum Sensor (HC Adsorber and Catalyst System)
V 2 VSV (EVAP)
V 3 VSV (HC Adsorber and Catalyst System)

W 1 Washer Motor
W 2 Water Pump Motor (A/C)
W 3 Water Pump Motor (Inverter)
W 4 Water Temp. SW

G ELECTRICAL WIRING ROUTING

Position of Parts in Instrument Panel

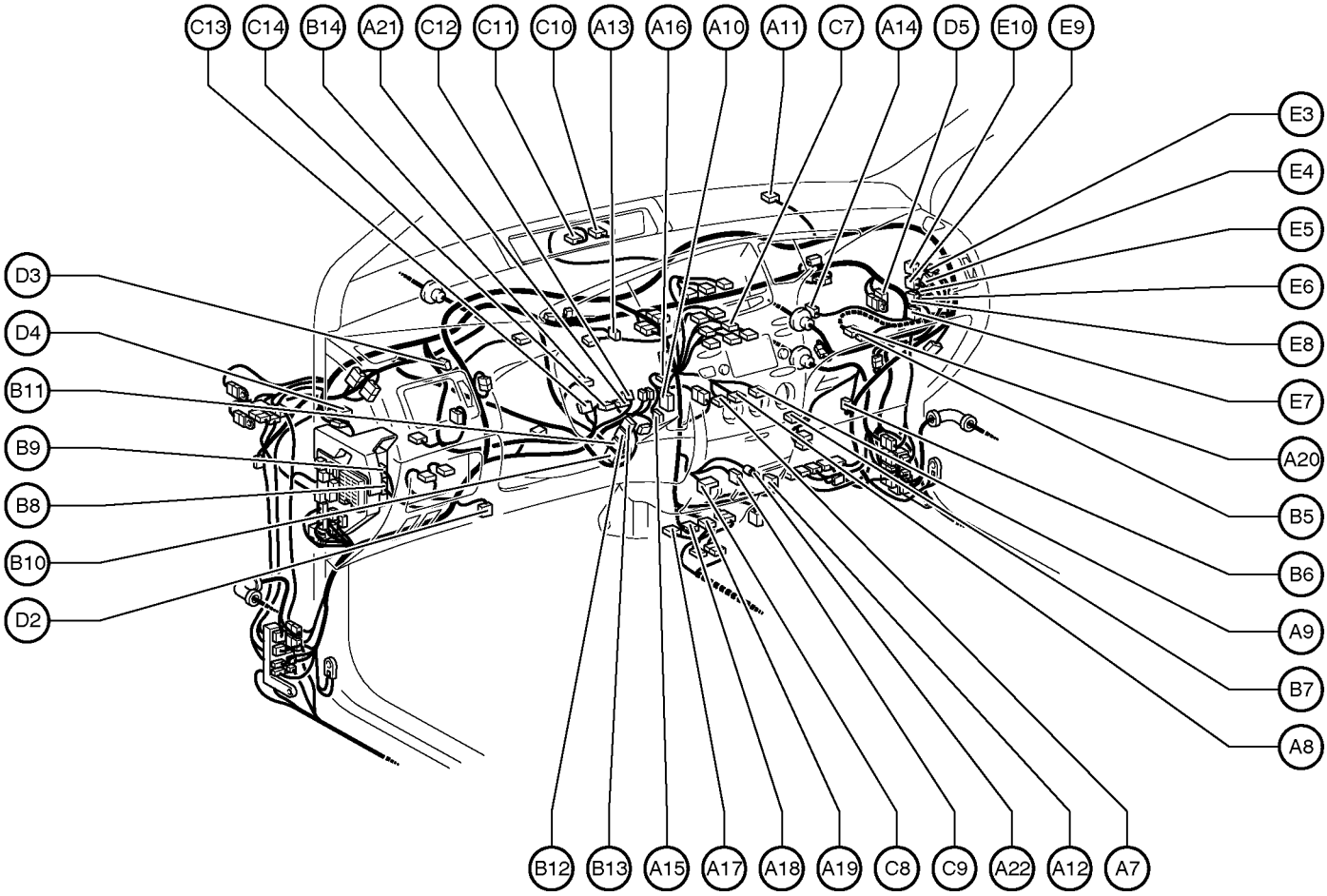

A 7 A/C Amplifier
A 8 A/C Amplifier
A 9 A/C Amplifier
A10 A/C Room Temp. Sensor
A11 A/C Solar Sensor
A12 A/C Thermistor
A13 Accel Position Sensor
A14 Air Inlet Control Servo Motor
A15 Air Mix Control Servo Motor
A16 Air Vent Mode Control Servo Motor
A17 Airbag Sensor Assembly
A18 Airbag Sensor Assembly
A19 Airbag Sensor Assembly
A20 Airbag Squib (Front Passenger Airbag Assembly)
A21 Airbag Squib (Steering Wheel Pad)
A22 Ashtray Illumination

B 5 Back–Up Light Relay
B 6 Blower Motor
B 7 Blower Motor Linear Controller
B 8 Body ECU
B 9 Body ECU
B10 Brake ECU
B11 Brake ECU
B12 Brake ECU
B13 Brake ECU
B14 Brake Warning Buzzer

C 7 Center Cluster SW
C 8 Cigarette Lighter
C 9 Cigarette Lighter Illumination
C10 Combination Meter
C11 Combination Meter
C12 Combination SW
C13 Combination SW
C14 Combination SW

D 2 Data Link Connector 3
D 3 Daytime Running Light Relay
D 4 Diode (Door Courtesy)
D 5 Diode (Daytime Running Light)

E 3 EMPS ECU
E 4 EMPS ECU
E 5 EMPS ECU
E 6 EMPS ECU
E 7 Engine Control Module
E 8 Engine Control Module
E 9 Engine Control Module
E10 Engine Control Module

Position of Parts in Instrument Panel

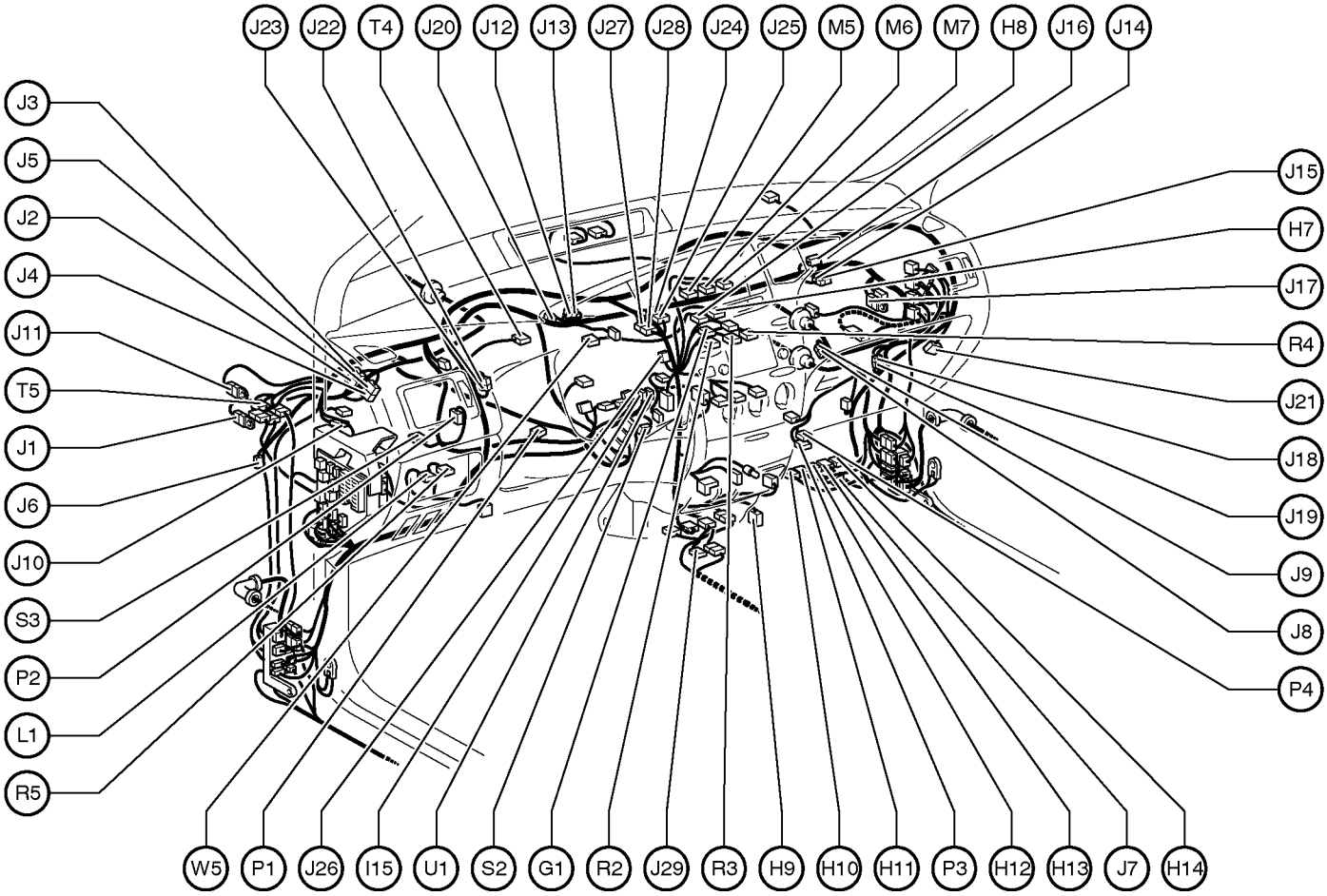

G 1 Gateway ECU

H 7 Hazard Warning SW
H 8 Hazard Warning SW
H 9 Heated Oxygen Sensor (Bank 1 Sensor 2)
H10 Hybrid Vehicle Control ECU
H11 Hybrid Vehicle Control ECU
H12 Hybrid Vehicle Control ECU
H13 Hybrid Vehicle Control ECU
H14 Hybrid Vehicle Control ECU

I 15 Ignition SW

J 1 Junction Connector
J 2 Junction Connector
J 3 Junction Connector
J 4 Junction Connector
J 5 Junction Connector
J 6 Junction Connector
J 7 Junction Connector
J 8 Junction Connector
J 9 Junction Connector
J 10 Junction Connector
J 11 Junction Connector
J 12 Junction Connector
J 13 Junction Connector
J 14 Junction Connector
J 15 Junction Connector
J 16 Junction Connector
J 17 Junction Connector
J 18 Junction Connector
J 19 Junction Connector
J 20 Junction Connector
J 21 Junction Connector
J 22 Junction Connector
J 23 Junction Connector
J 24 Junction Connector
J 25 Junction Connector
J 26 Junction Connector
J 27 Junction Connector
J 28 Junction Connector
J 29 Junction Connector

L 1 Light Control Rheostat

M 5 Multi Display
M 6 Multi Display
M 7 Multi Display

P 1 Park/Neutral Position SW
P 2 Parking Brake SW
P 3 PTC Heater
P 4 PTC Heater

R 2 Radio and Player
R 3 Radio and Player
R 4 Radio and Player
R 5 Remote Control Mirror SW

S 2 Shift Lock ECU
S 3 Stop Light SW

T 4 Transponder Key Computer
T 5 Turn Signal Flasher Relay

U 1 Unlock Warning SW and Key Interlock Solenoid

W 5 Wireless Door Control Receiver

G ELECTRICAL WIRING ROUTING

Position of Parts in Body

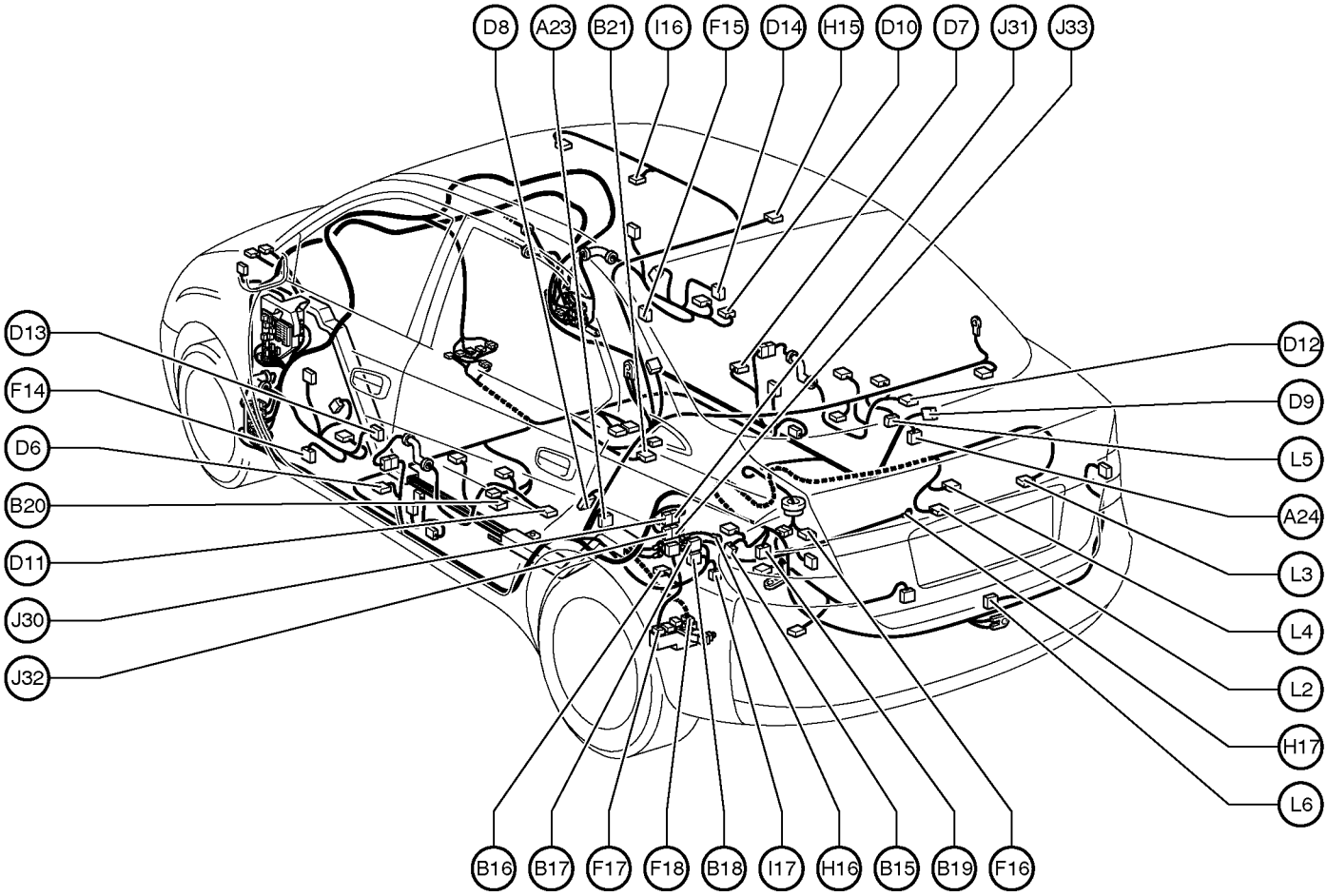

A23 ABS Speed Sensor Rear LH
A24 ABS Speed Sensor Rear RH

B15 Battery Blower Motor
B16 Battery Blower Motor Controller
B17 Battery ECU
B18 Battery ECU
B19 Battery Fan Relay
B20 Buckle SW and Tension Reducer LH
B21 Buckle SW RH and
Seat Belt Warning Occupant Detection Sensor

D 6 Door Courtesy SW Front LH
D 7 Door Courtesy SW Front RH
D 8 Door Courtesy SW Rear LH
D 9 Door Courtesy SW Rear RH
D10 Door Lock Control SW Front RH
D11 Door Lock Motor and Door Unlock Detection SW Rear LH
D12 Door Lock Motor and Door Unlock Detection SW Rear RH
D13 Door Lock Motor, Door Key Lock and Unlock SW and Door Unlock Detection SW Front LH
D14 Door Lock Motor, Door Key Lock and Unlock SW and Door Unlock Detection SW Front RH

F 14 Front Door Speaker LH
F 15 Front Door Speaker RH
F 16 Fuel Pump and Fuel Sender
F 17 Fusible Link Block No.2
F 18 Fusible Link Block No.2

H15 High Mounted Stop Light
H16 Hybrid Vehicle Battery
H17 Hybrid Vehicle Battery

I 16 Interior Light
I 17 Interlock SW

J 30 Junction Connector
J 31 Junction Connector
J 32 Junction Connector
J 33 Junction Connector

L 2 License Plate Light LH
L 3 License Plate Light RH
L 4 Luggage Compartment Door Unlock SW
L 5 Luggage Compartment Light
L 6 Luggage Compartment Light SW

Position of Parts in Body

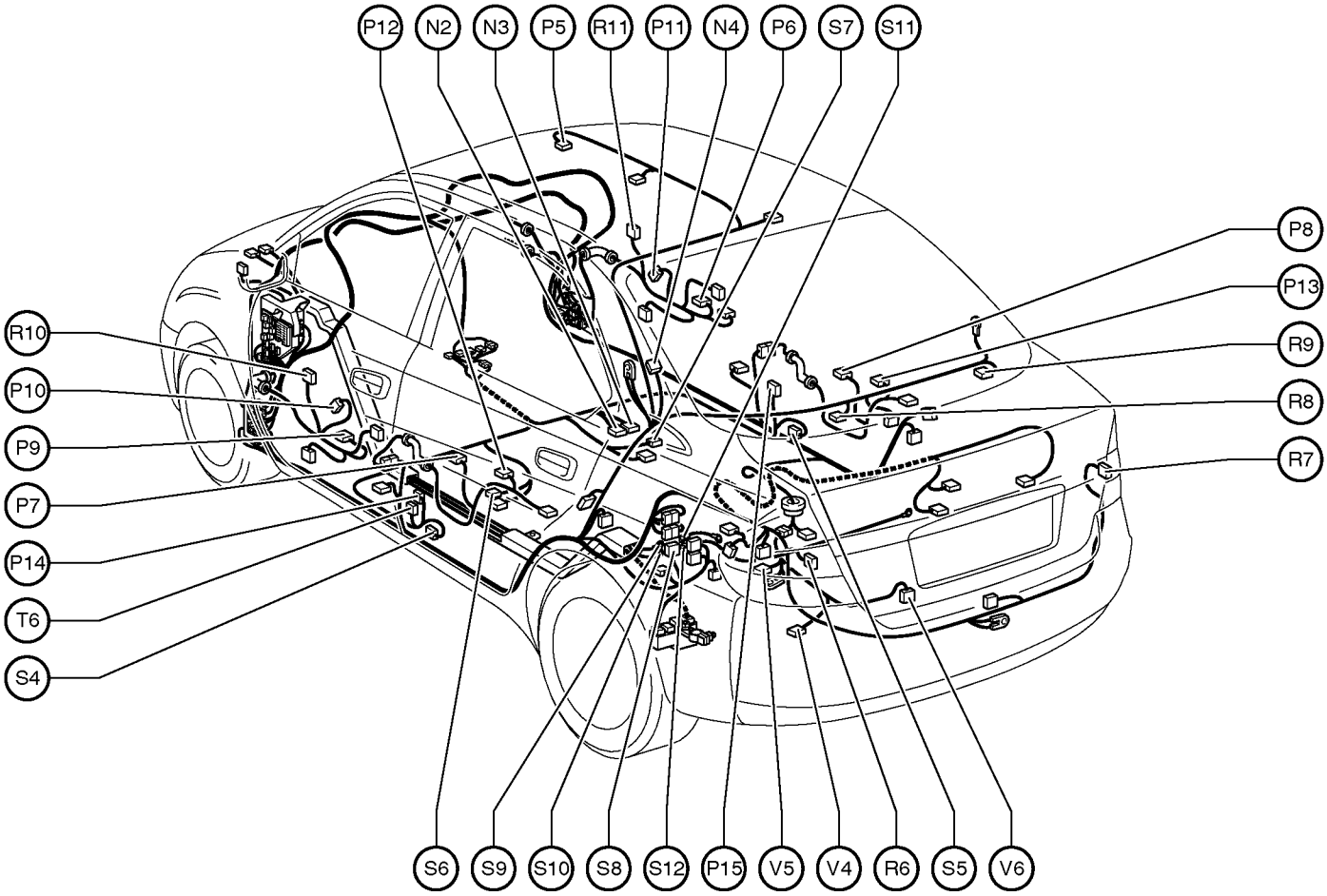

N 2 Navigation ECU
N 3 Navigation ECU
N 4 Noise Filter (Rear Window Defogger)

P 5 Personal Light
P 6 Power Window Control SW Front RH
P 7 Power Window Control SW Rear LH
P 8 Power Window Control SW Rear RH
P 9 Power Window Master SW
P10 Power Window Motor Front LH
P11 Power Window Motor Front RH
P12 Power Window Motor Rear LH
P13 Power Window Motor Rear RH
P14 Pretensioner LH
P15 Pretensioner RH

R 6 Rear Combination Light LH
R 7 Rear Combination Light RH
R 8 Rear Speaker LH
R 9 Rear Speaker RH
R10 Remote Control Mirror LH
R11 Remote Control Mirror RH

S 4 Side Airbag Sensor LH
S 5 Side Airbag Sensor RH
S 6 Side Airbag Squib LH
S 7 Side Airbag Squib RH
S 8 System Main Relay
S 9 System Main Relay
S10 System Main Relay
S11 System Main Relay
S12 System Main Relay

T 6 Tension Reducer Solenoid

V 4 Vapor Pressure Sensor
V 5 VSV (Canister Closed Valve)
V 6 VSV (Parge Flow Switching Valve)

G ELECTRICAL WIRING ROUTING

▭ : Location of Connector Joining Wire Harness and Wire Harness
▽ : Location of Ground Points

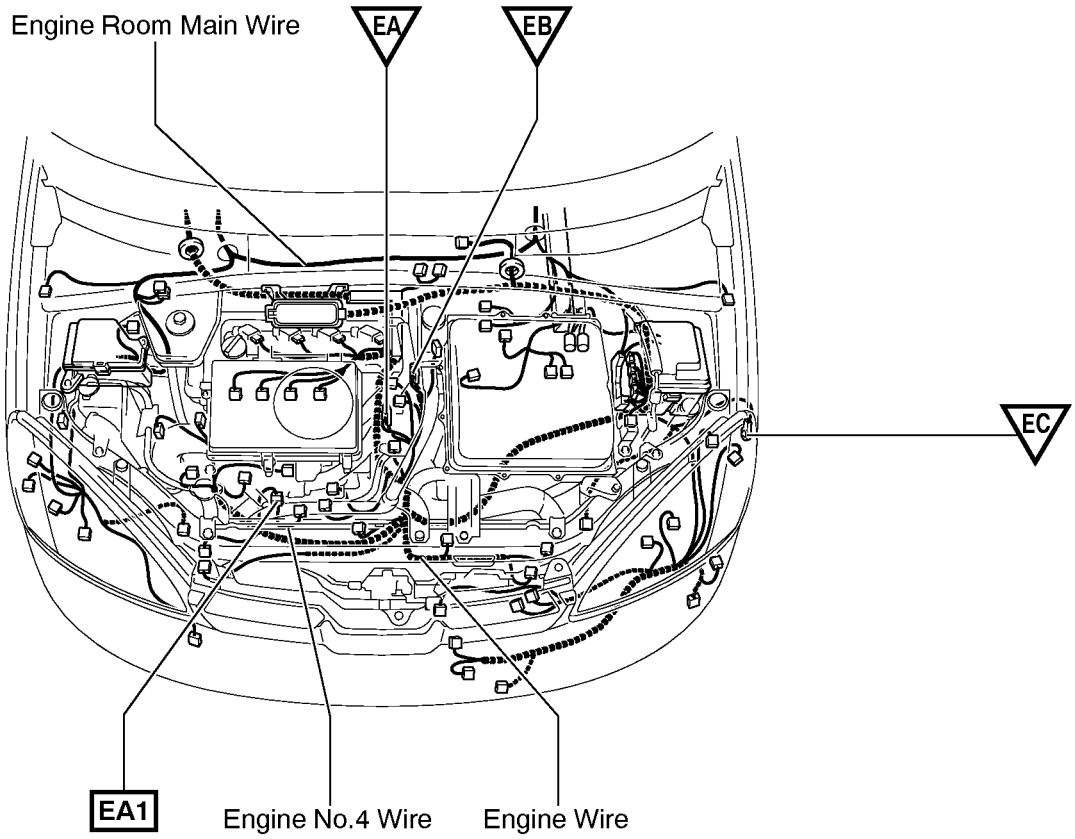

⬡ : Location of Splice Points

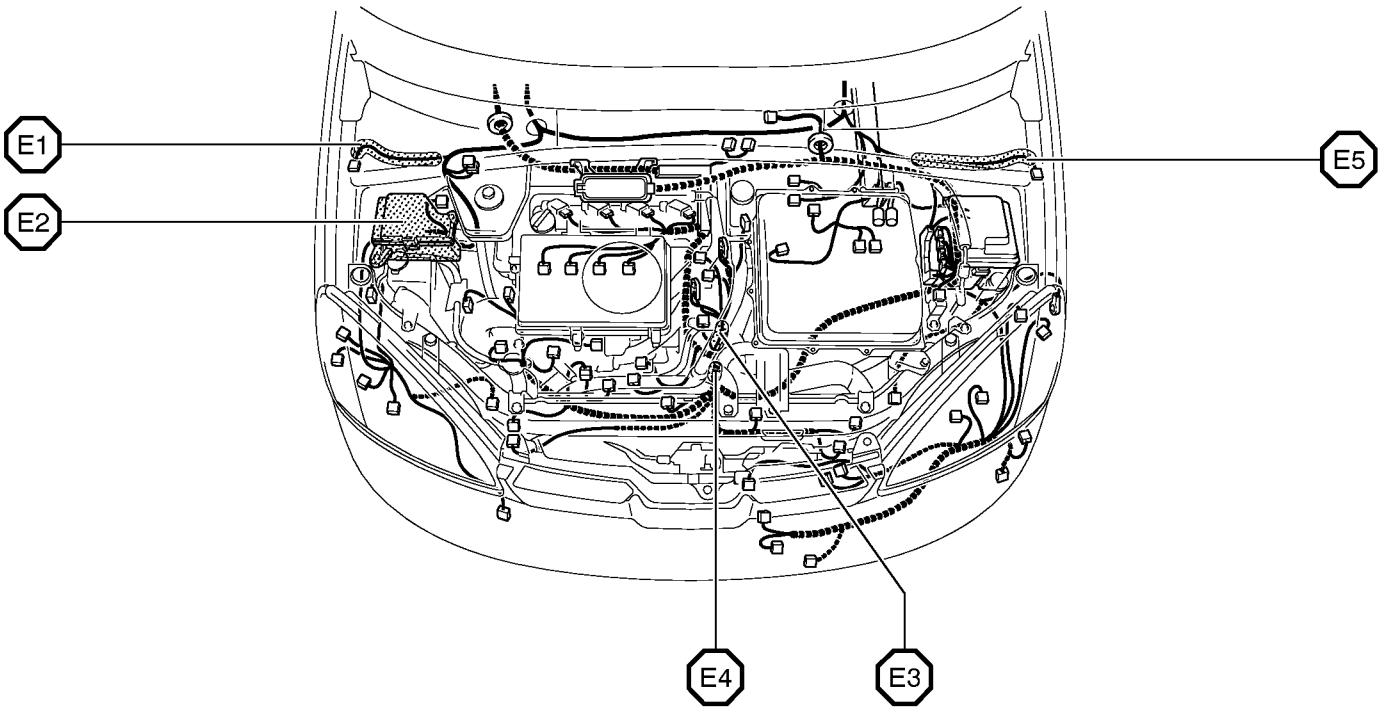

Connector Joining Wire Harness and Wire Harness

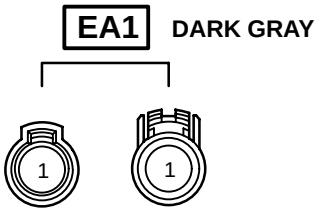

Code	Joining Wire Harness and Wire Harness (Connector Location)
EA1	Engine Wire and Engine No.4 Wire (Near the Radiator Fan)

G ELECTRICAL WIRING ROUTING

▭ : Location of Connector Joining Wire Harness and Wire Harness

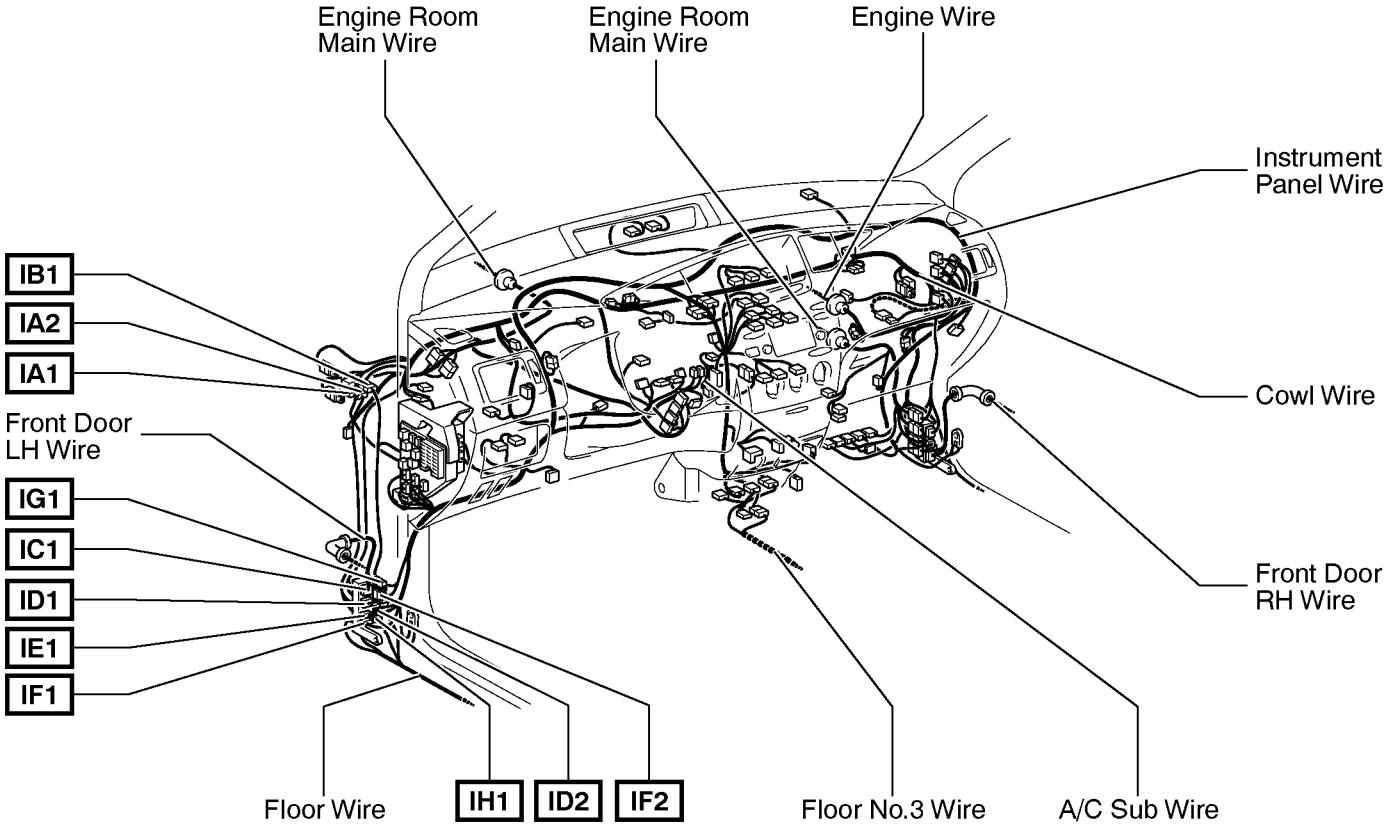

▽ : Location of Ground Points

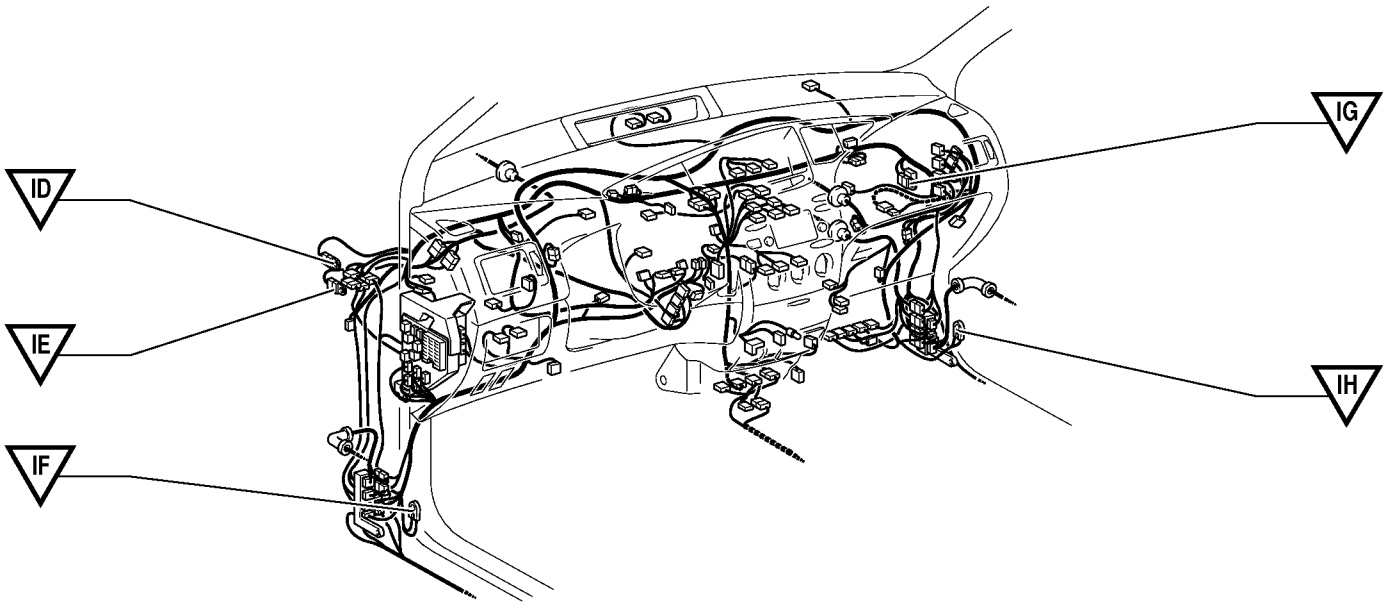

Connector Joining Wire Harness and Wire Harness

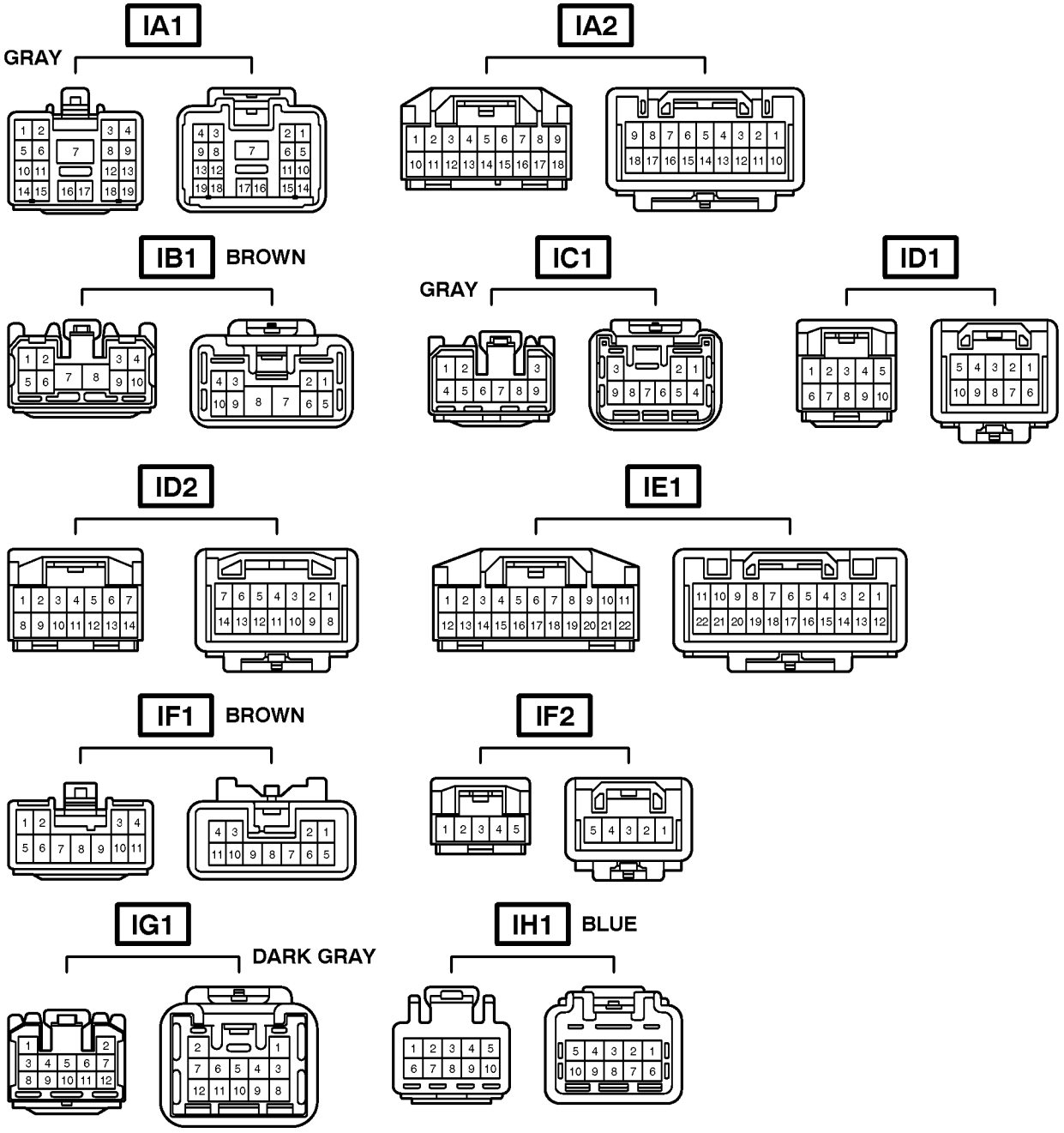

Code	Joining Wire Harness and Wire Harness (Connector Location)
IA1	Engine Room Main Wire and Cowl Wire (Cowl Side Panel LH)
IA2	
IB1	Floor Wire and Cowl Wire (Cowl Side Panel LH)
IC1	Front Door LH Wire and Cowl Wire (Left Kick Panel)
ID1	Instrument Panel Wire and Cowl Wire (Left Kick Panel)
ID2	
IE1	Instrument Panel Wire and Engine Room Main Wire (Left Kick Panel)
IF1	Instrument Panel Wire and Floor Wire (Left Kick Panel)
IF2	
IG1	Front Door LH Wire and Instrument Panel Wire (Left Kick Panel)
IH1	Floor Wire and Engine Room Main Wire (Left Kick Panel)

G ELECTRICAL WIRING ROUTING

: Location of Connector Joining Wire Harness and Wire Harness

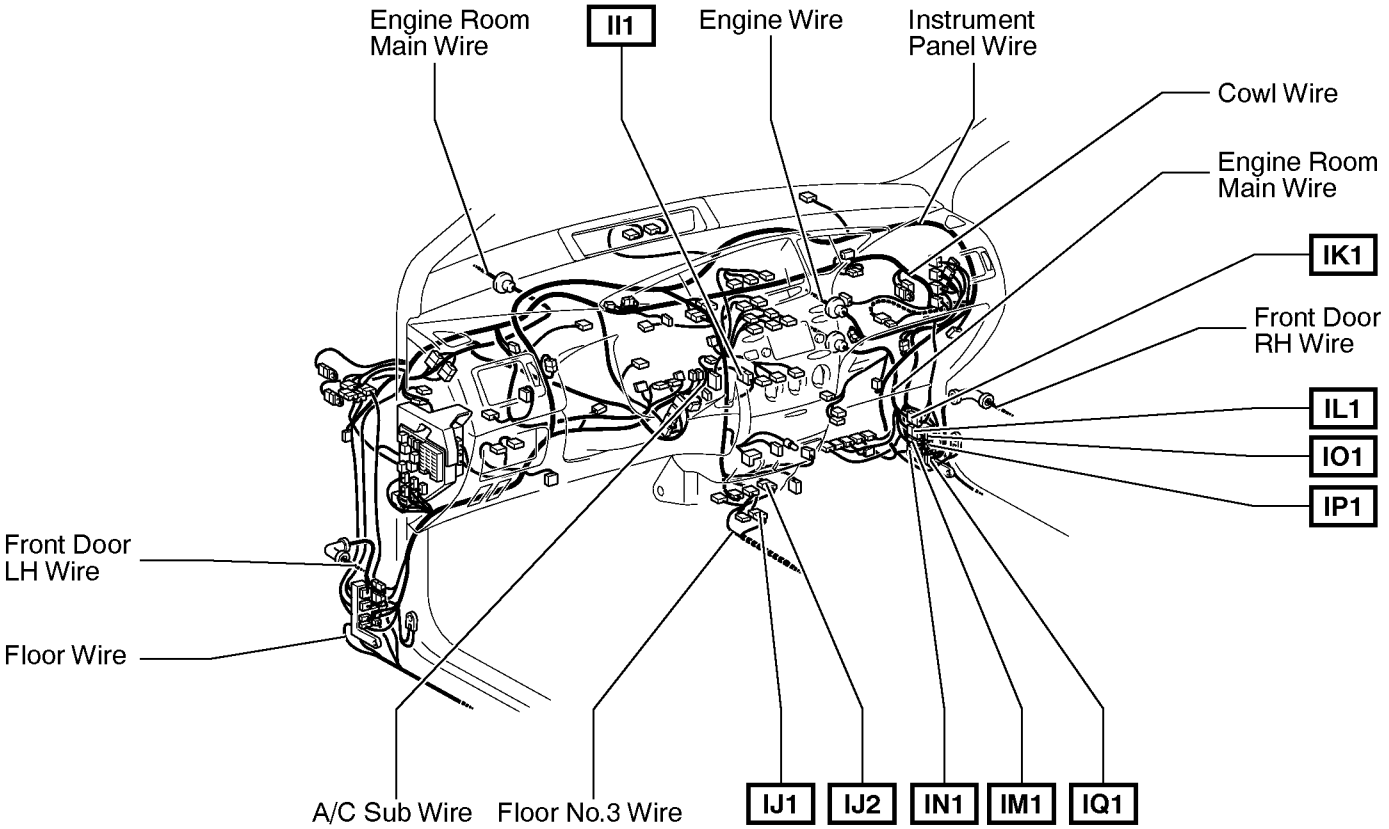

: Location of Splice Points

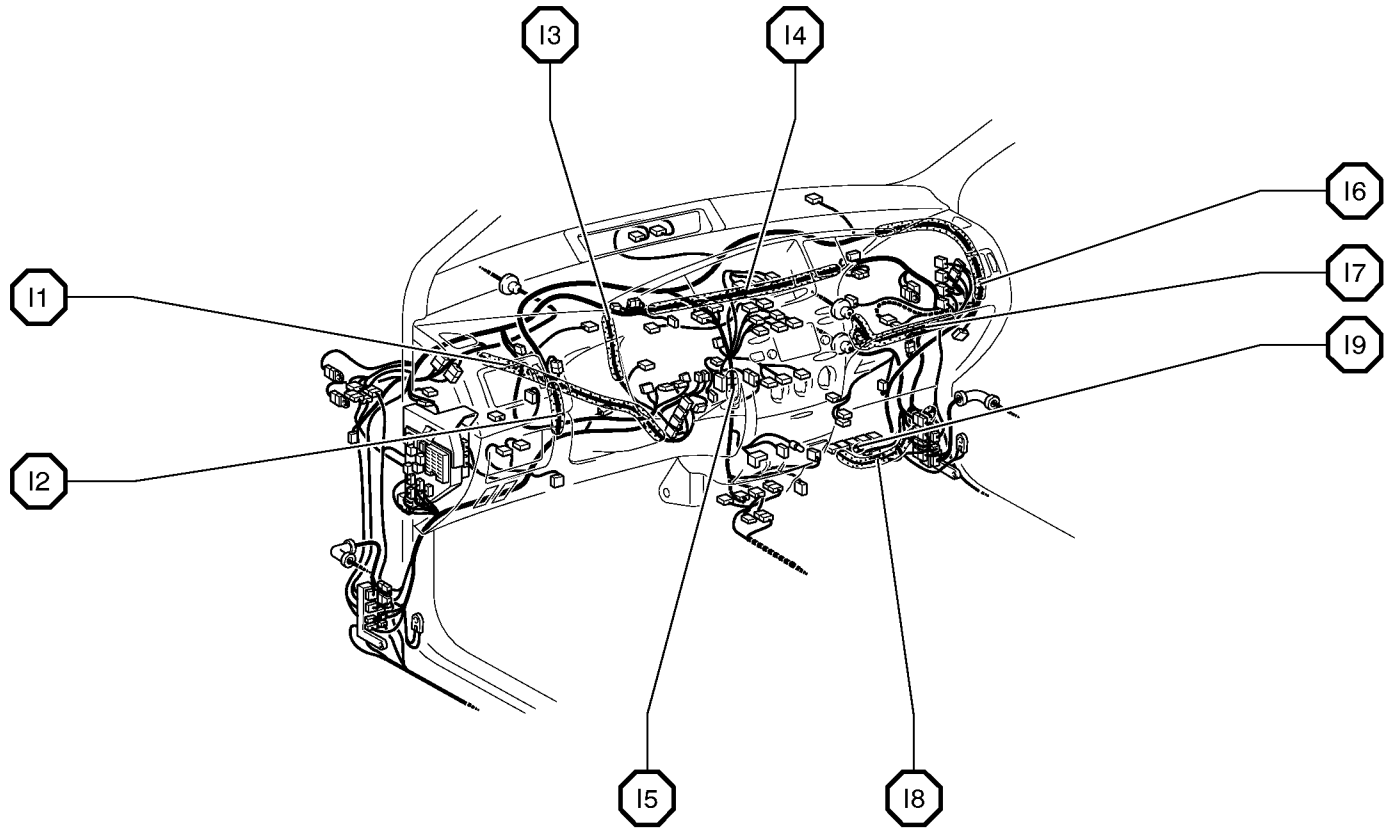

Connector Joining Wire Harness and Wire Harness

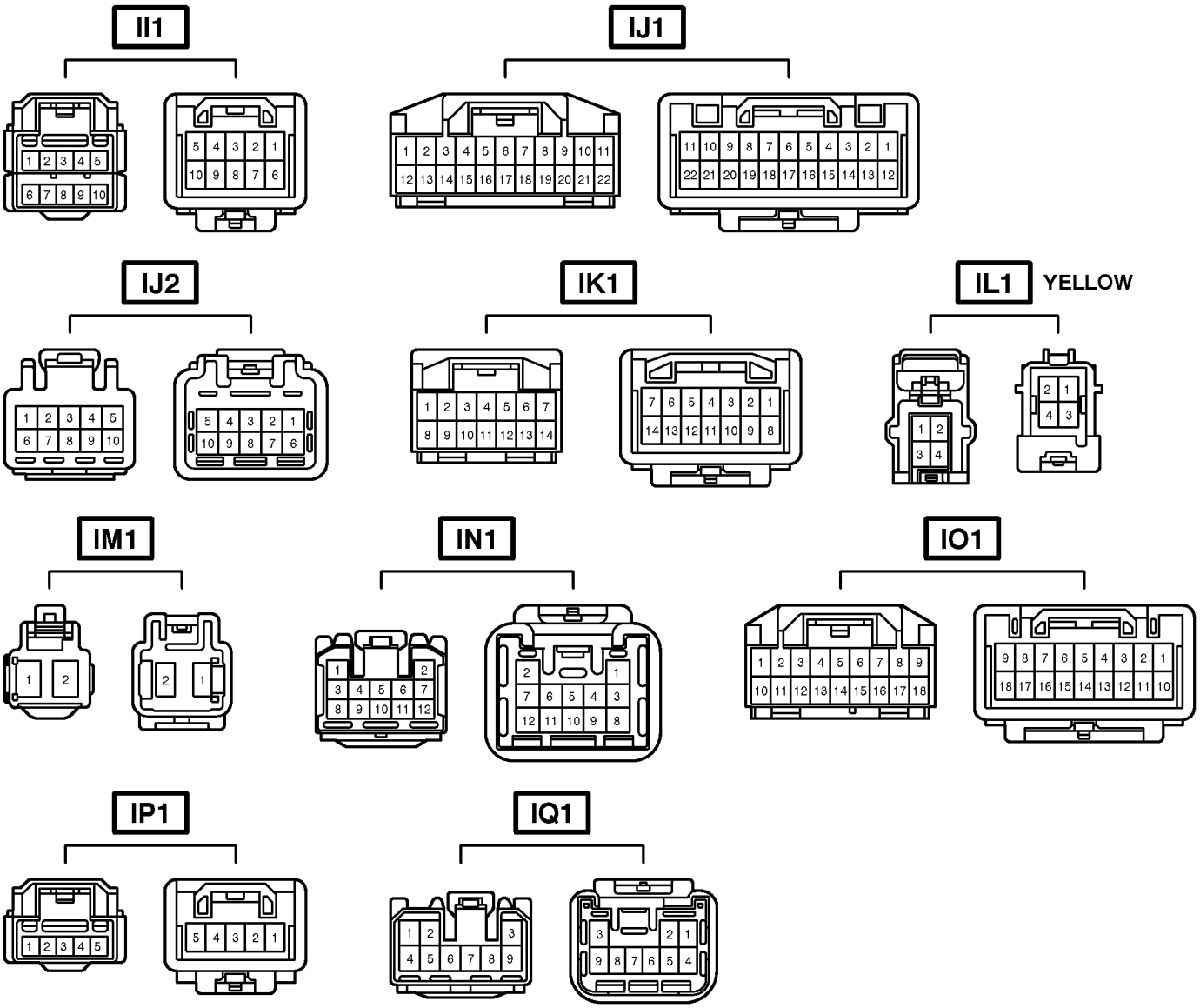

Code	Joining Wire Harness and Wire Harness (Connector Location)
II1	Instrument Panel Wire and A/C Sub Wire (Instrument Panel Brace LH)
IJ1	Floor No.3 Wire and Instrument Panel Wire (Under the Instrument Panel Center)
IJ2	
IK1	Engine Wire and Engine Room Main Wire (Right Kick Panel)
IL1	Instrument Panel Wire and Engine Room Main Wire (Right Kick Panel)
IM1	Engine Room Main Wire and Cowl Wire (Right Kick Panel)
IN1	Front Door RH Wire and Instrument Panel Wire (Right Kick Panel)
IO1	Engine Wire and Cowl Wire (Right Kick Panel)
IP1	Instrument Panel Wire and Cowl Wire (Right Kick Panel)
IQ1	Front Door RH Wire and Cowl Wire (Right Kick Panel)

G ELECTRICAL WIRING ROUTING

▭ : Location of Connector Joining Wire Harness and Wire Harness
▽ : Location of Ground Points

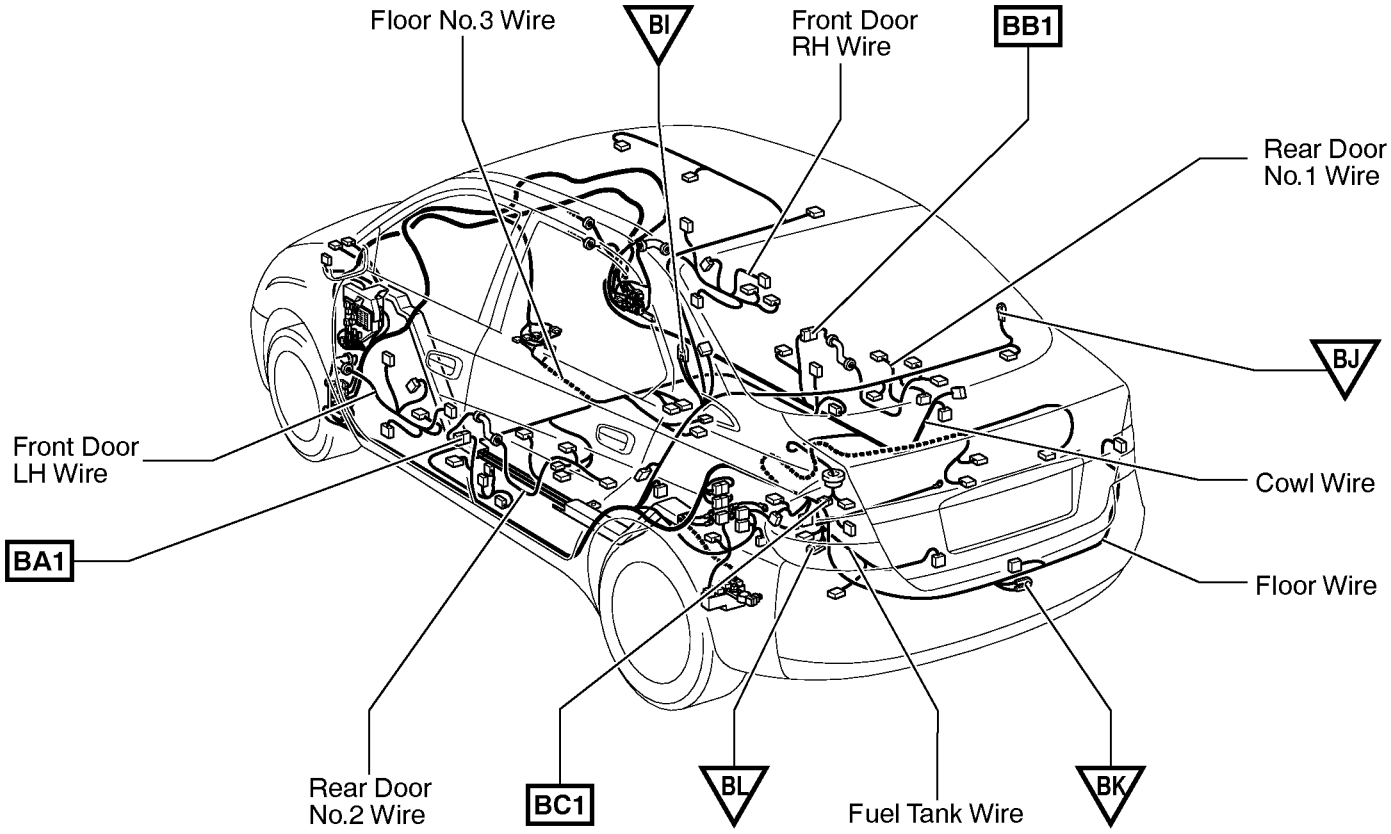

⬡ : Location of Splice Points

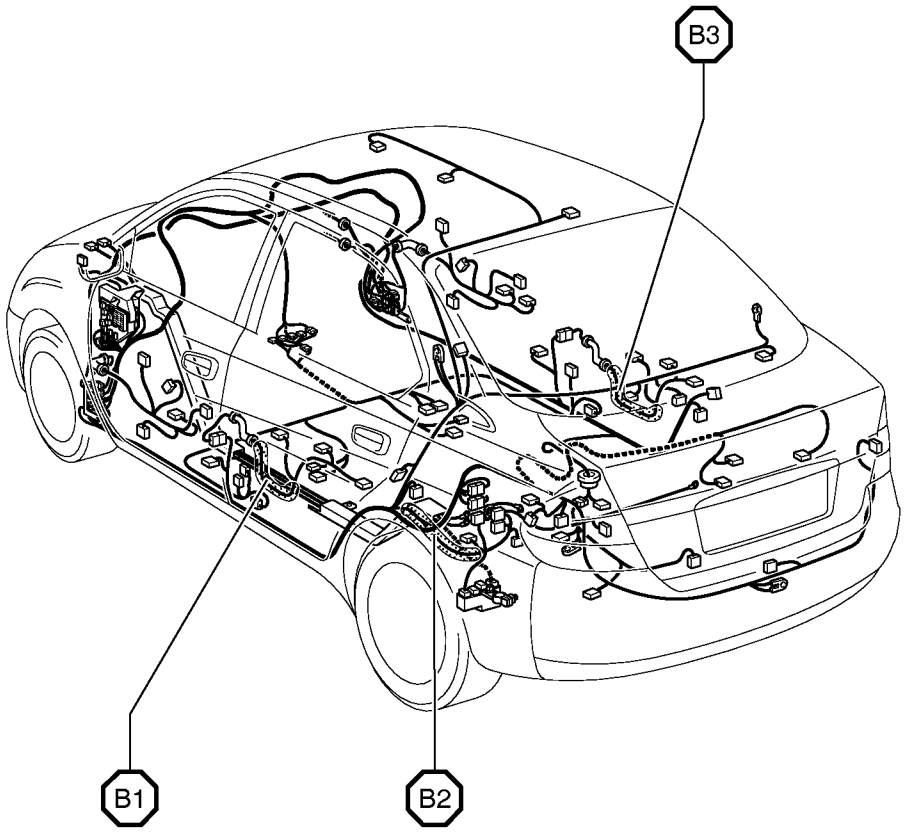

Connector Joining Wire Harness and Wire Harness

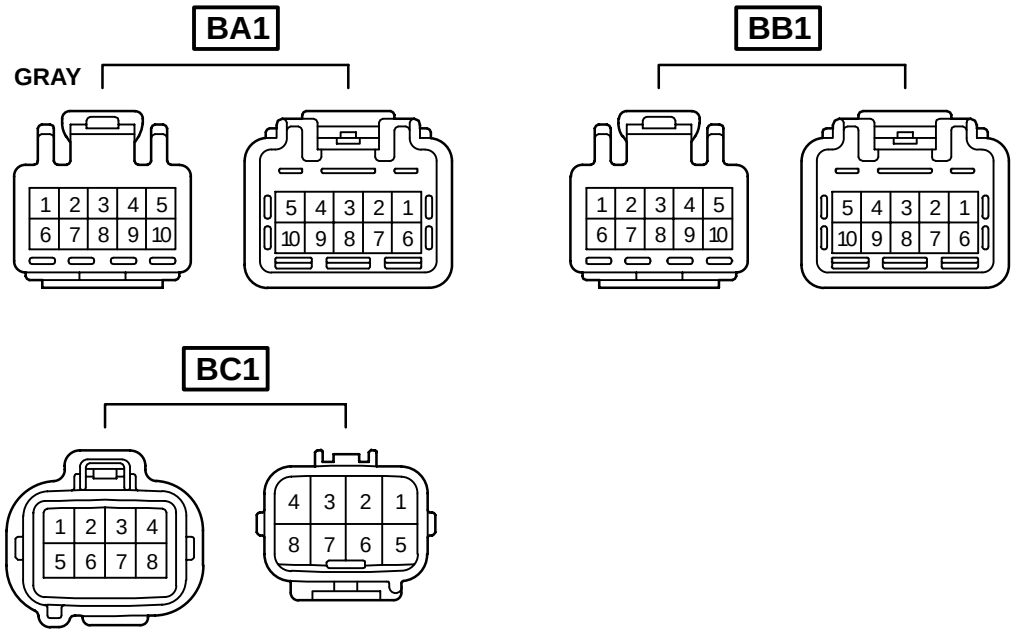

Code	Joining Wire Harness and Wire Harness (Connector Location)
BA1	Rear Door No.2 Wire and Floor Wire (Center Pillar LH)
BB1	Rear Door No.1 Wire and Cowl Wire (Center Pillar RH)
BC1	Cowl Wire and Fuel Tank Wire (Near the Fuel Tank)

POWER SOURCE

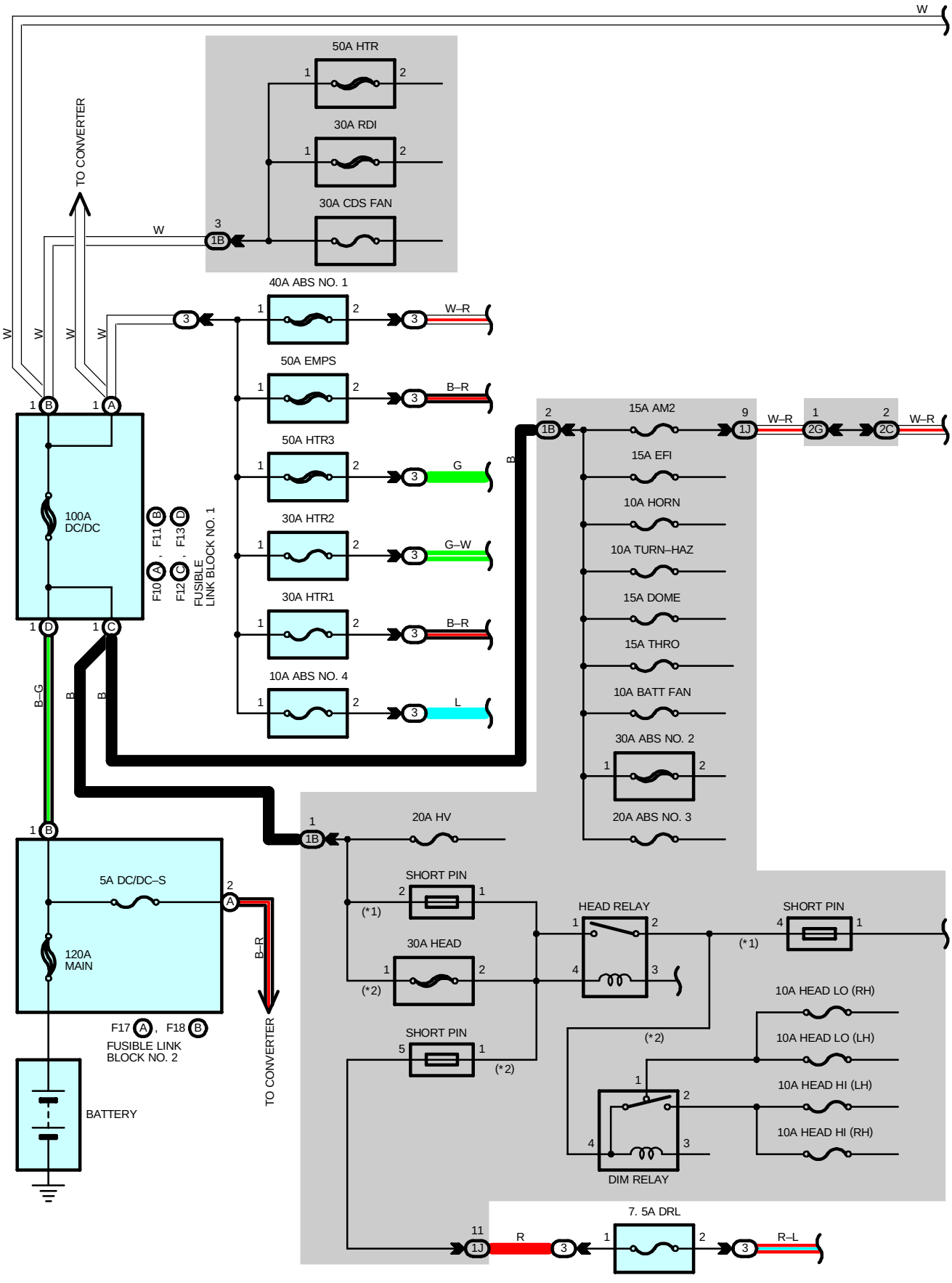

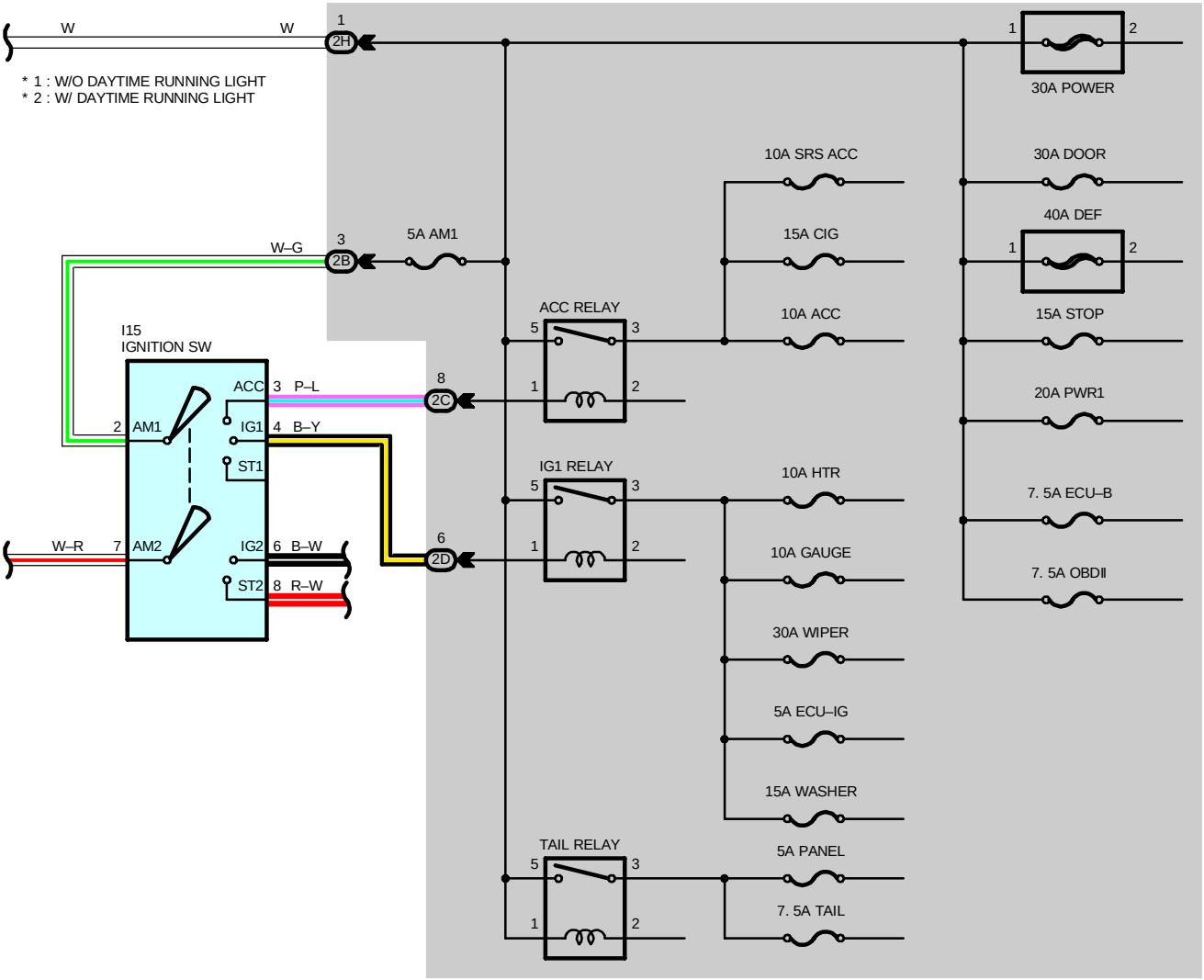
W
W
1
2H
* 1 : W/O DAYTIME RUNNING LIGHT
* 2 : W/ DAYTIME RUNNING LIGHT
1
2
30A POWER
10A SRS ACC
30A DOOR
W–G
3
2B
5A AM1
15A CIG
40A DEF
1
2
ACC RELAY
5
3
10A ACC
15A STOP
I15
IGNITION SW
8
2C
ACC
3
P–L
1
2
20A PWR1
2
AM1
IG1
4
B–Y
ST1
IG1 RELAY
5
3
10A HTR
7. 5A ECU–B
W–R
7
AM2
IG2
6
B–W
6
2D
1
2
10A GAUGE
7. 5A OBDII
ST2
8
R–W
30A WIPER
5A ECU–IG
15A WASHER
TAIL RELAY
5
3
5A PANEL
1
2
7. 5A TAIL

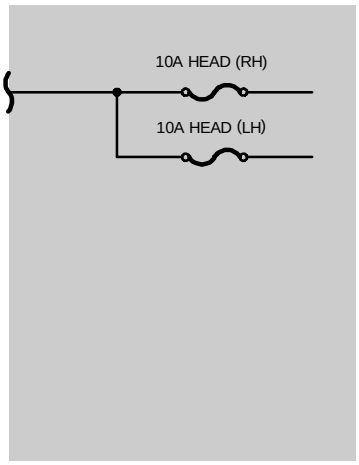
10A HEAD (RH)
10A HEAD (LH)

POWER SOURCE

SERVICE HINTS

HEAD RELAY

2–1 : Closed with the light control SW at **HEAD** position or the dimmer SW at **FLASH** position
Closed with the engine running and the parking brake pedal released (Parking brake SW off) [w/ Daytime running light]

TAIL RELAY

5–3 : Closed with the light control SW at **TAIL** or **HEAD** position

I15 IGNITION SW

2–3 : Closed with the ignition key at **ACC** or **ON** position
2–4 : Closed with the ignition key at **ON** or **ST** position
7–6 : Closed with the ignition key at **ON** or **ST** position
7–8 : Closed with the ignition key at **ST** position

: PARTS LOCATION

Code		See Page	Code		See Page	Code	See Page
F10	A	34	F13	D	34	I15	37
F11	B	34	F17	A	38		
F12	C	34	F18	B	38		

: RELAY BLOCKS

Code	See Page	Relay Blocks (Relay Block Location)
3	24	Engine Room R/B No.3 (Engine Compartment Right)

: JUNCTION BLOCK AND WIRE HARNESS CONNECTOR

Code	See Page	Junction Block and Wire Harness (Connector Location)
1B	27	Engine Room Main Wire and Engine Room J/B (Engine Compartment Left)
1J		
2B	30	Instrument Panel Wire and Instrument Panel J/B (Cowl Side Panel LH)
2C		
2D		
2G	31	Engine Room Main Wire and Instrument Panel J/B (Cowl Side Panel LH)
2H		

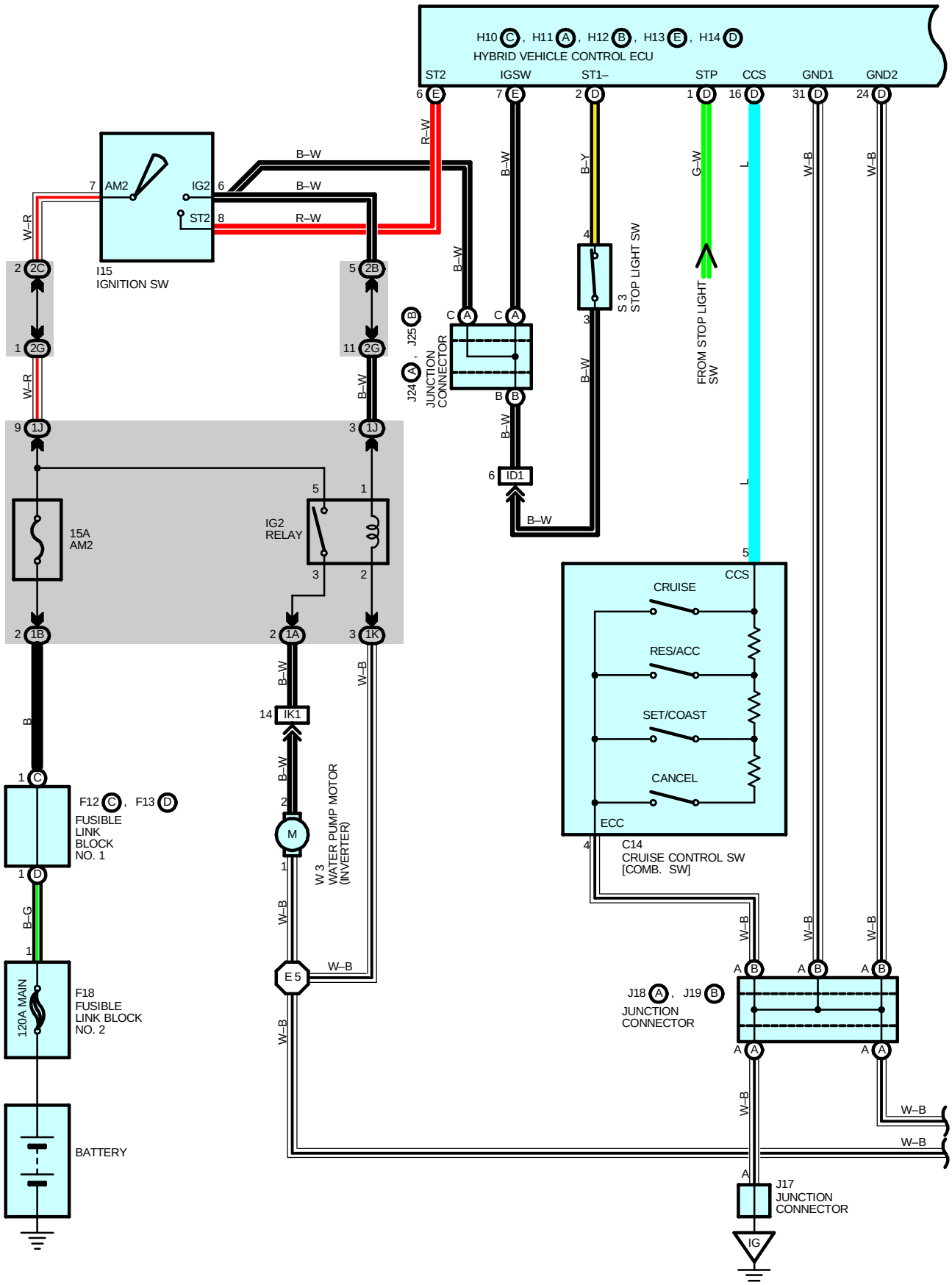
H10 C , H11 A , H12 B , H13 E , H14 D
HYBRID VEHICLE CONTROL ECU
ST2
IGSW
ST1–
STP
CCS
GND1
GND2
I15
IGNITION SW
AM2
IG2
ST2
B–W
R–W
W–R
B–Y
G–W
L
W–B
S 3
STOP LIGHT SW
FROM STOP LIGHT SW
J25 , J24
JUNCTION CONNECTOR
ID1
15A
AM2
IG2
RELAY
CCS
CRUISE
RES/ACC
SET/COAST
CANCEL
ECC
C14
CRUISE CONTROL SW
[COMB. SW]
IK1
W 3
WATER PUMP MOTOR
(INVERTER)
E 5
F12 C , F13 D
FUSIBLE
LINK
BLOCK
NO. 1
120A MAIN
F18
FUSIBLE
LINK BLOCK
NO. 2
BATTERY
J18 A , J19 B
JUNCTION
CONNECTOR
J17
JUNCTION
CONNECTOR
IG

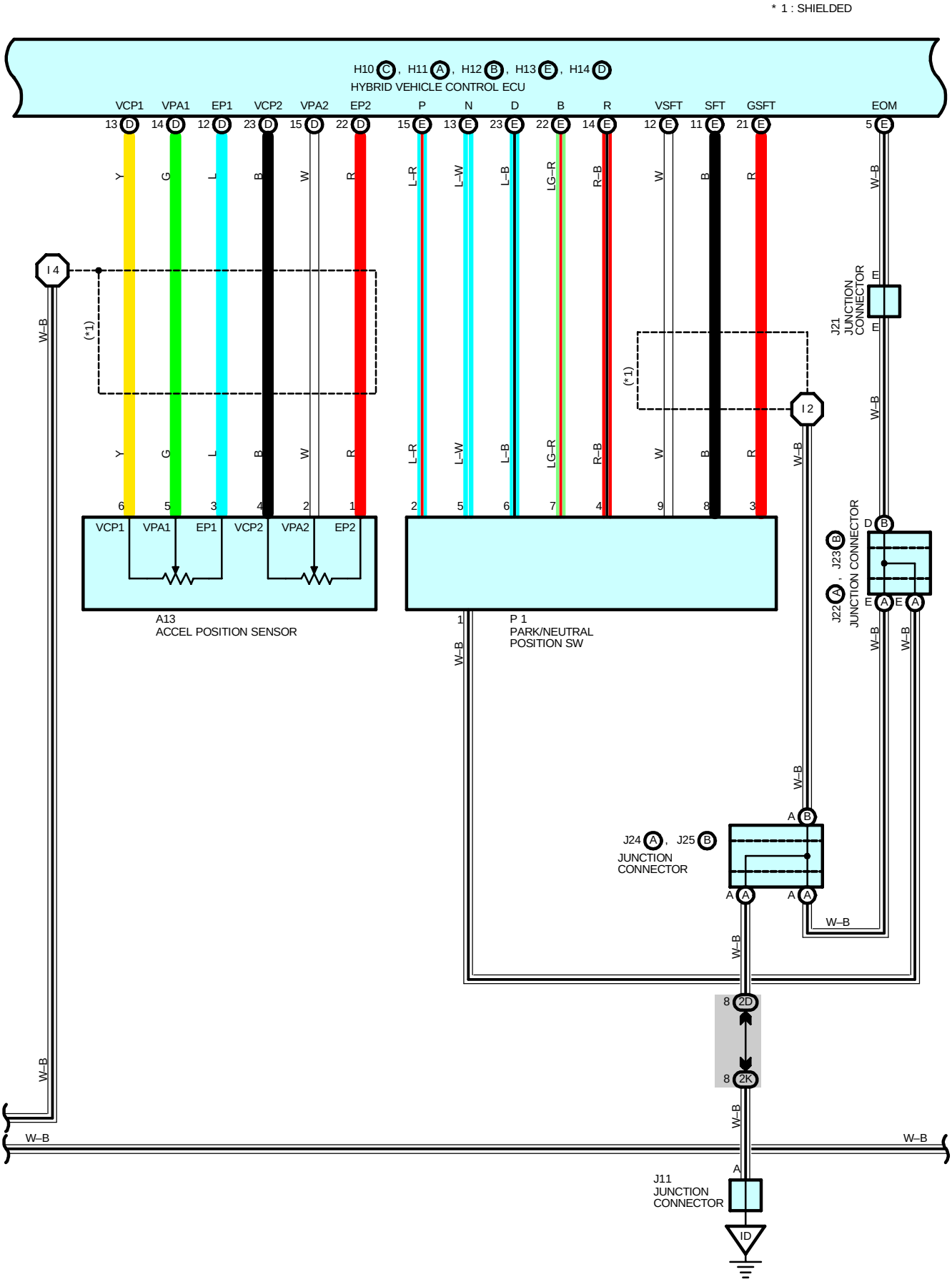
* 1 : SHIELDED
H10 C , H11 A , H12 B , H13 E , H14 D
HYBRID VEHICLE CONTROL ECU
VCP1 VPA1 EP1 VCP2 VPA2 EP2 P N D B R VSFT SFT GSFT EOM
I 4
I 2
(*1)
J21 JUNCTION CONNECTOR
J22 , J23 JUNCTION CONNECTOR
A13
ACCEL POSITION SENSOR
P 1
PARK/NEUTRAL POSITION SW
J24 , J25
JUNCTION CONNECTOR
J11 JUNCTION CONNECTOR
2D
2K
W–B
L–R
L–W
L–B
LG–R
R–B
ID

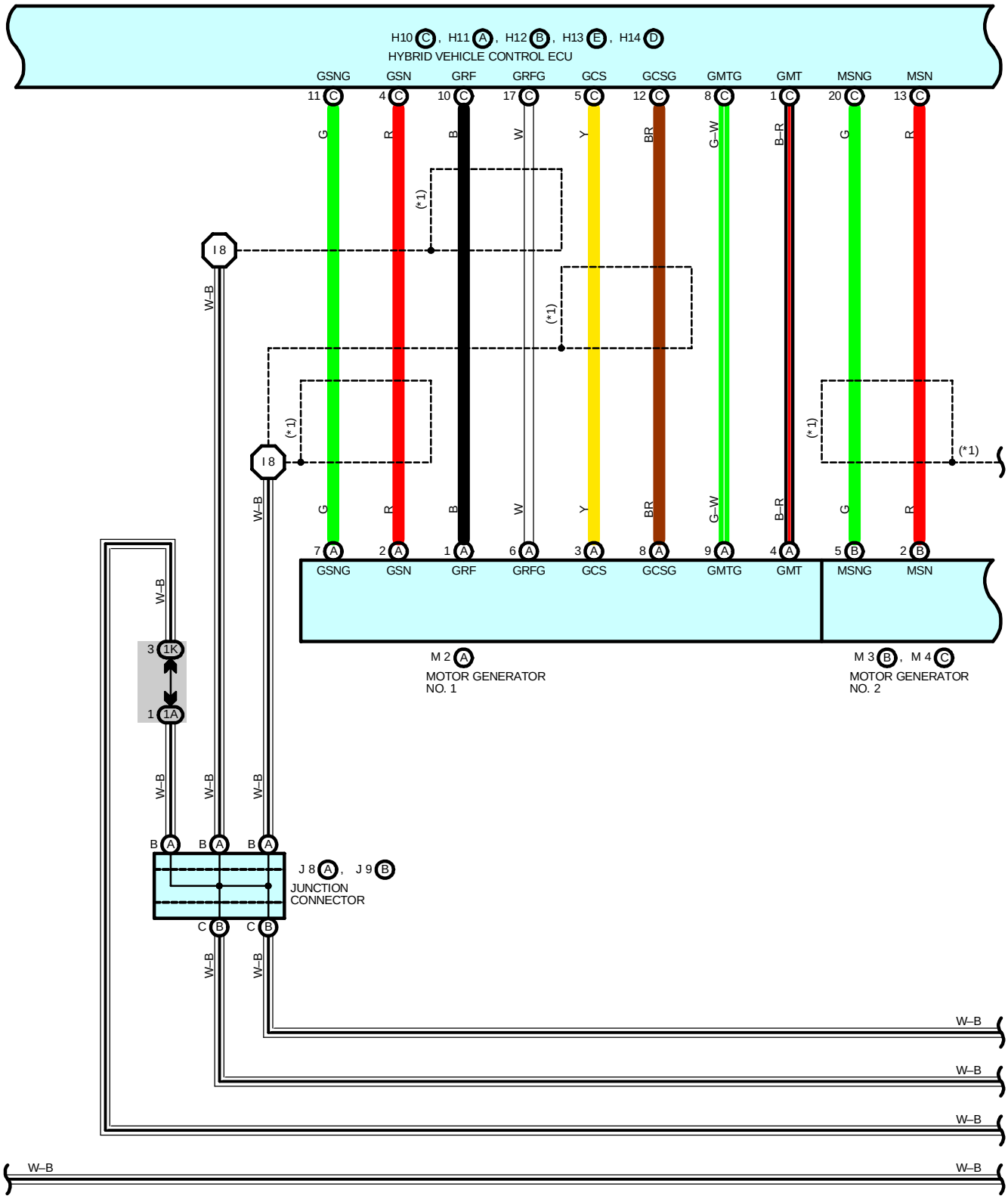
H10 C , H11 A , H12 B , H13 E , H14 D
HYBRID VEHICLE CONTROL ECU
GSNG
GSN
GRF
GRFG
GCS
GCSG
GMTG
GMT
MSNG
MSN
11 C
4 C
10 C
17 C
5 C
12 C
8 C
1 C
20 C
13 C
G
R
B
W
Y
BR
G–W
B–R
G
R
(*1)
I 8
W–B
7 A
2 A
1 A
6 A
3 A
8 A
9 A
4 A
5 B
2 B
M 2 A
MOTOR GENERATOR NO. 1
M 3 B , M 4 C
MOTOR GENERATOR NO. 2
3 1K
1 1A
B A
C B
J 8 A , J 9 B
JUNCTION CONNECTOR

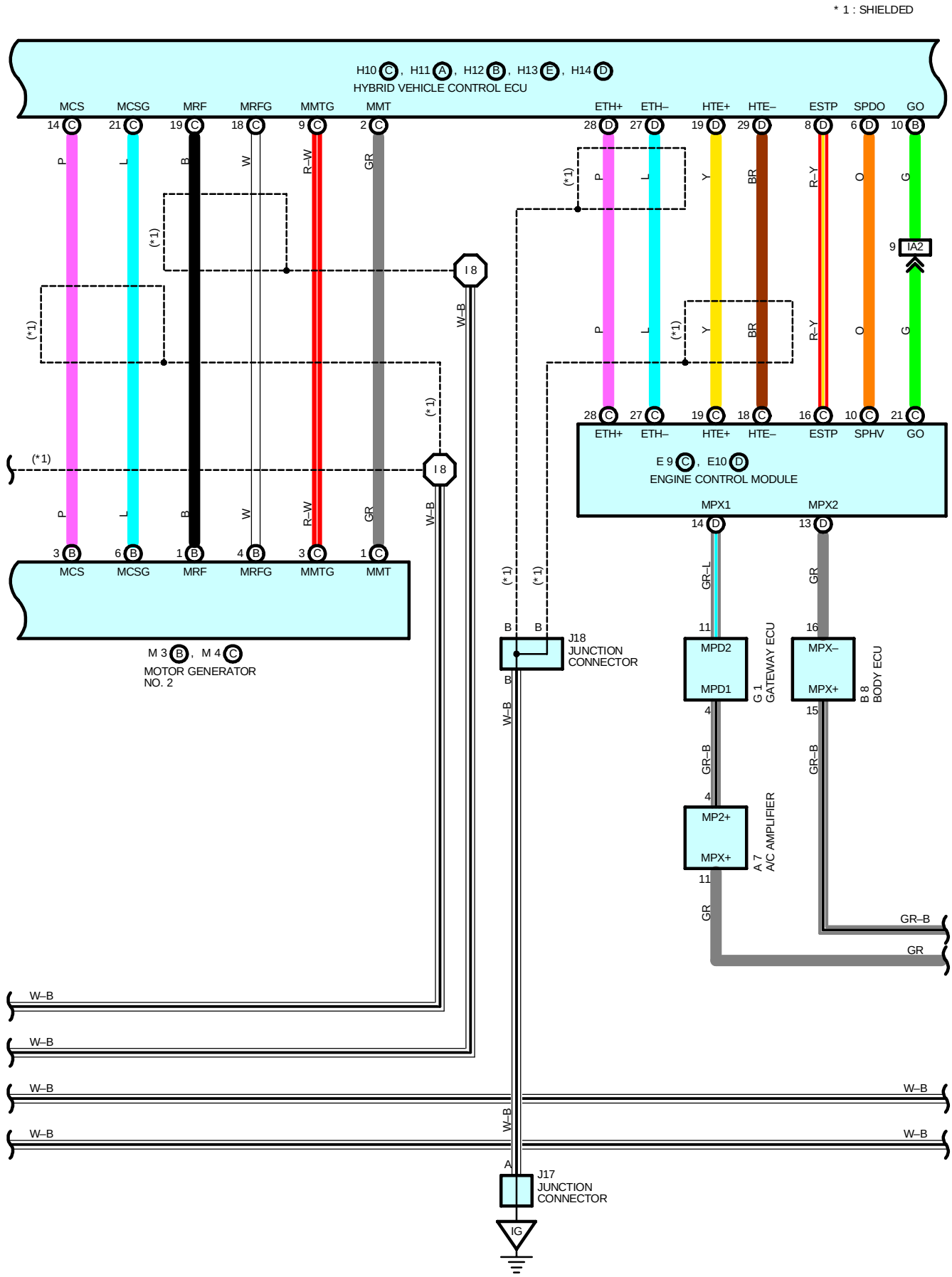
* 1 : SHIELDED
H10 C , H11 A , H12 B , H13 E , H14 D
HYBRID VEHICLE CONTROL ECU
MCS
MCSG
MRF
MRFG
MMTG
MMT
ETH+
ETH–
HTE+
HTE–
ESTP
SPDO
GO
14 C
21 C
19 C
18 C
9 C
2 C
28 D
27 D
19 D
29 D
8 D
6 D
10 B
P
L
B
W
R–W
GR
Y
BR
R–Y
O
G
(*1)
I 8
W–B
9 IA2
IA2
28 C
27 C
19 C
18 C
16 C
10 C
21 C
SPHV
E 9 C , E10 D
ENGINE CONTROL MODULE
MPX1
MPX2
14 D
13 D
GR–L
GR
3 B
6 B
1 B
4 B
3 C
1 C
M 3 B , M 4 C
MOTOR GENERATOR
NO. 2
J18
JUNCTION
CONNECTOR
11
16
MPD2
MPD1
MPX–
MPX+
G 1
GATEWAY ECU
B 8
BODY ECU
4
15
GR–B
MP2+
MPX+
A 7
A/C AMPLIFIER
J17
JUNCTION
CONNECTOR
A
IG

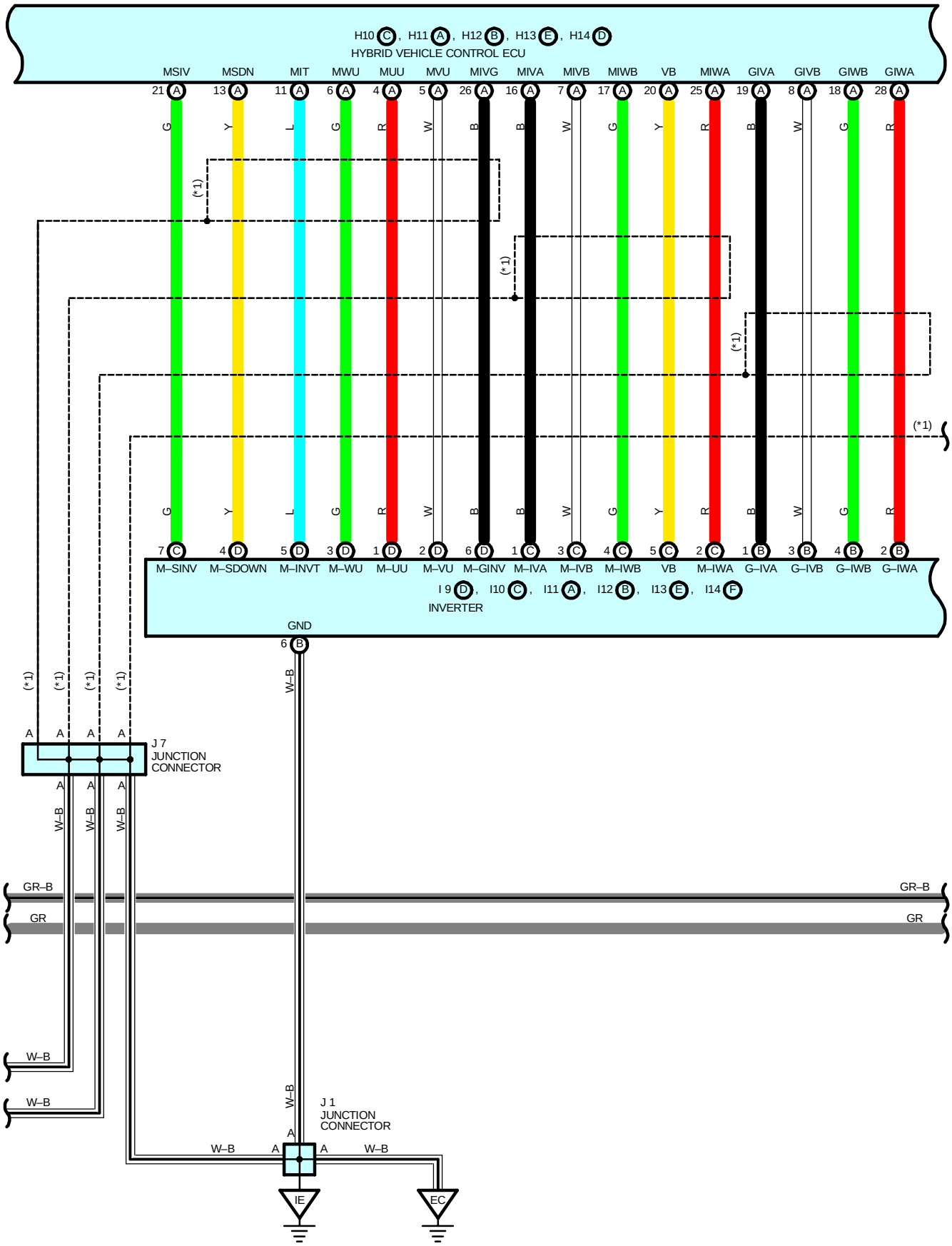
H10 C , H11 A , H12 B , H13 E , H14 D
HYBRID VEHICLE CONTROL ECU
MSIV MSDN MIT MWU MUU MVU MIVG MIVA MIVB MIWB VB MIWA GIVA GIVB GIWB GIWA
21 13 11 6 4 5 26 16 7 17 20 25 19 8 18 28
G Y L G R W B B W G Y R B W G R
(*1)
7 4 5 3 1 2 6 1 3 4 5 2 1 3 4 2
M–SINV M–SDOWN M–INVT M–WU M–UU M–VU M–GINV M–IVA M–IVB M–IWB VB M–IWA G–IVA G–IVB G–IWB G–IWA
I 9 D , I10 C , I11 A , I12 B , I13 E , I14 F
INVERTER
GND
6 B
W–B
J 7
JUNCTION
CONNECTOR
GR–B
GR
W–B
J 1
JUNCTION
CONNECTOR
IE
EC

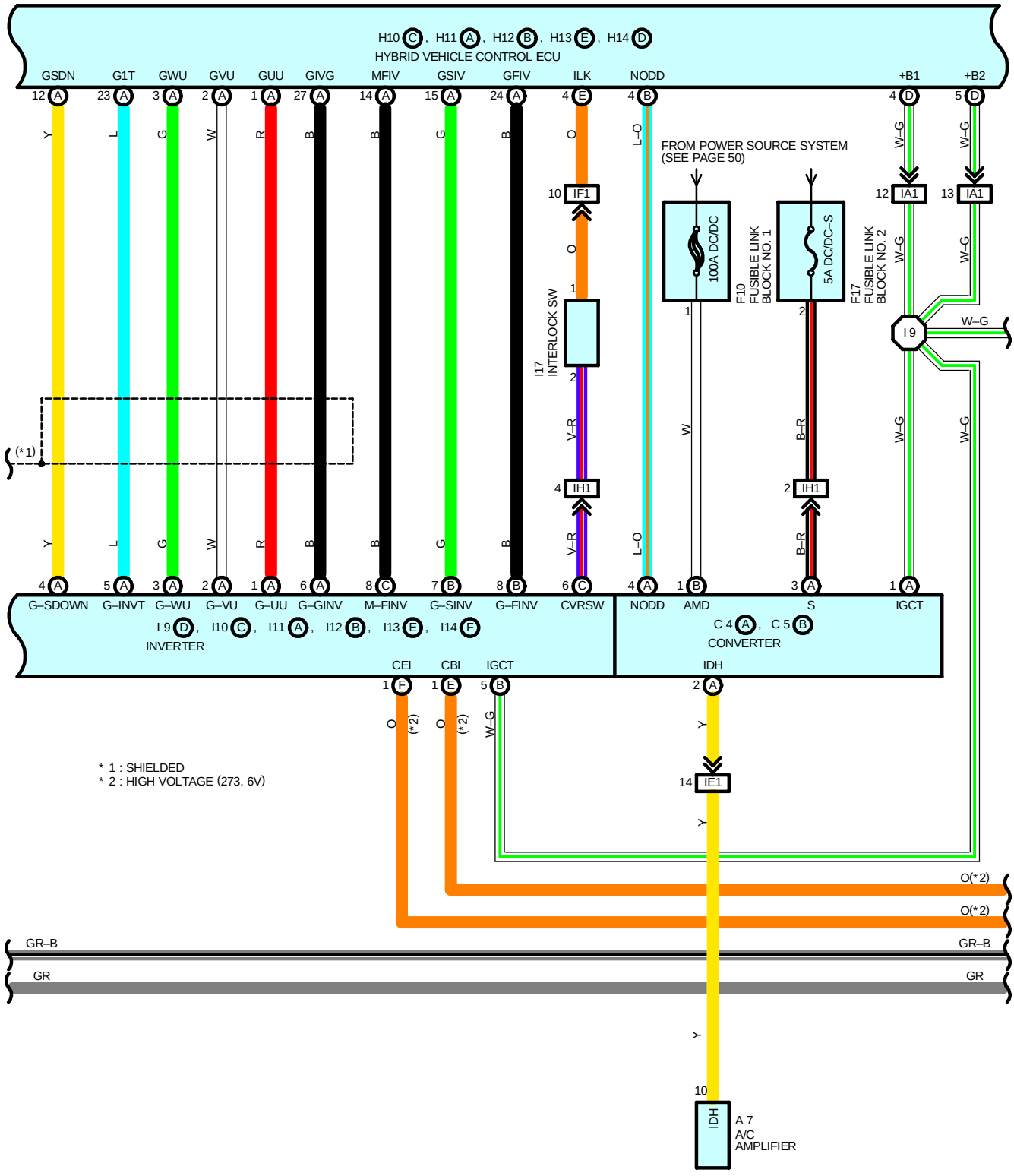
H10 C , H11 A , H12 B , H13 E , H14 D
HYBRID VEHICLE CONTROL ECU
GSDN G1T GWU GVU GUU GIVG MFIV GSIV GFIV ILK NODD +B1 +B2
FROM POWER SOURCE SYSTEM (SEE PAGE 50)
100A DC/DC
F10 FUSIBLE LINK BLOCK NO. 1
5A DC/DC–S
F17 FUSIBLE LINK BLOCK NO. 2
I17 INTERLOCK SW
IF1
IH1
IA1
I 9
(*1)
G–SDOWN G–INVT G–WU G–VU G–UU G–GINV M–FINV G–SINV G–FINV CVRSW NODD AMD S IGCT
I 9 D , I10 C , I11 A , I12 B , I13 E , I14 F
INVERTER
C 4 A , C 5 B
CONVERTER
CEI CBI IGCT IDH
IE1
* 1 : SHIELDED
* 2 : HIGH VOLTAGE (273. 6V)
O(*2)
GR–B
GR
IDH
A 7
A/C
AMPLIFIER

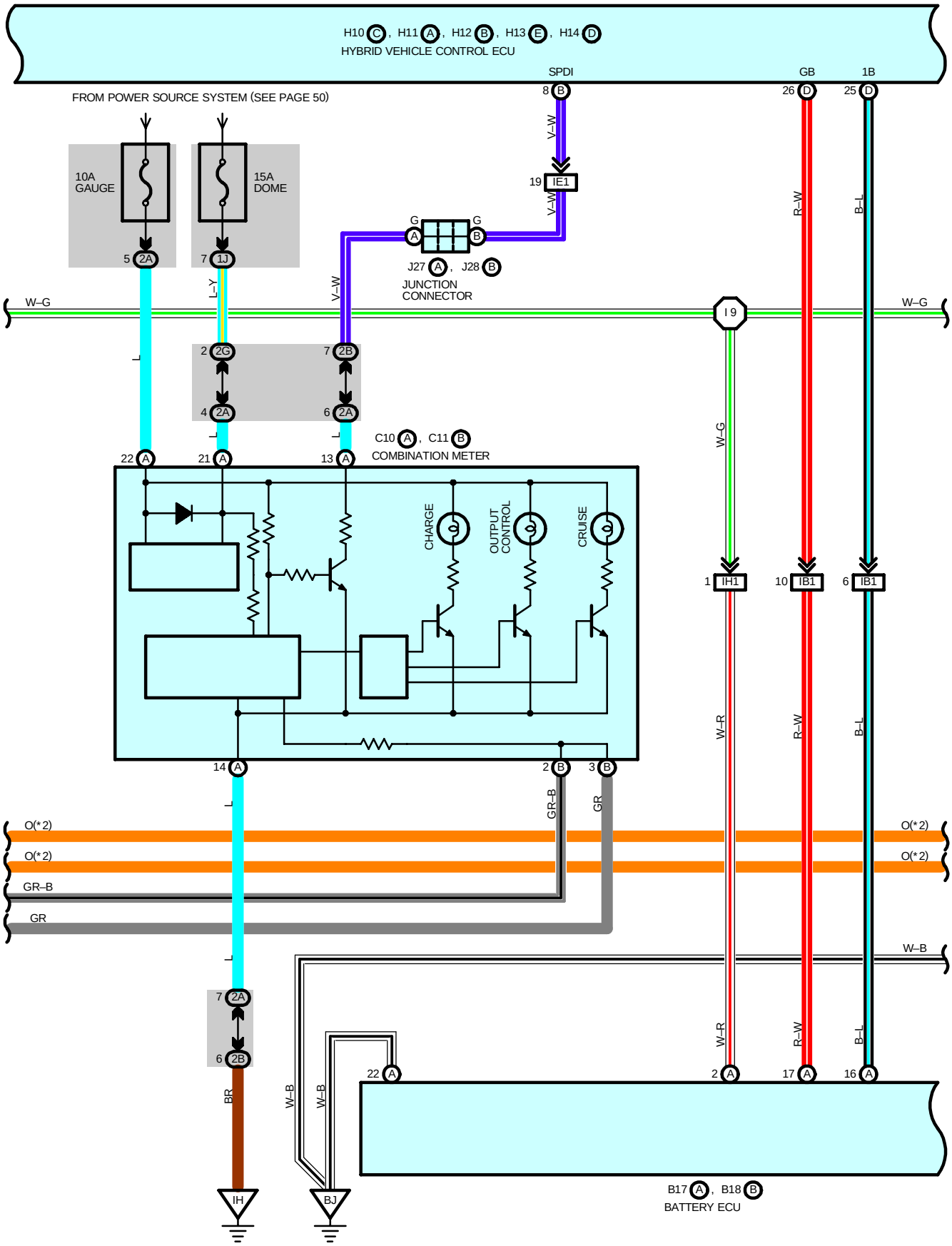
H10 C, H11 A, H12 B, H13 E, H14 D
HYBRID VEHICLE CONTROL ECU
SPDI
GB
1B
FROM POWER SOURCE SYSTEM (SEE PAGE 50)
8 B
26 D
25 D
V–W
R–W
B–L
10A GAUGE
15A DOME
19 IE1
G
G
A
B
J27 A, J28 B
JUNCTION CONNECTOR
5 2A
7 1J
L–Y
V–W
W–G
W–G
I 9
2 2G
7 2B
4 2A
6 2A
L
C10 A, C11 B
COMBINATION METER
22 A
21 A
13 A
W–G
CHARGE
OUTPUT CONTROL
CRUISE
1 IH1
10 IB1
6 IB1
W–R
R–W
B–L
14 A
2 B
3 B
GR–B
GR
O(*2)
O(*2)
GR–B
GR
O(*2)
O(*2)
W–B
7 2A
6 2B
BR
W–B
W–B
22 A
2 A
17 A
16 A
IH
BJ
B17 A, B18 B
BATTERY ECU

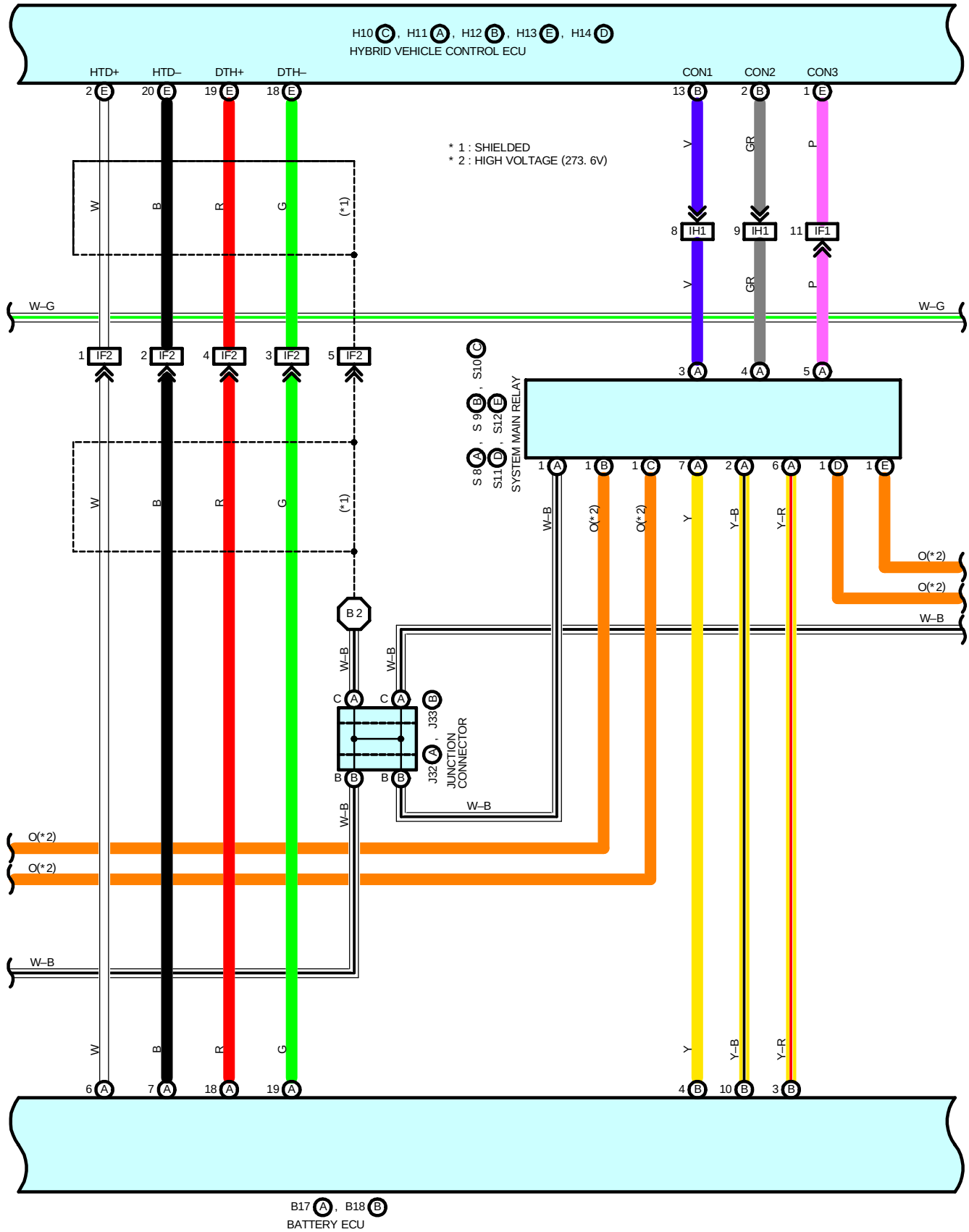
H10 C , H11 A , H12 B , H13 E , H14 D
HYBRID VEHICLE CONTROL ECU
HTD+
HTD–
DTH+
DTH–
CON1
CON2
CON3
* 1 : SHIELDED
* 2 : HIGH VOLTAGE (273. 6V)
W–G
IF2
IH1
IF1
SYSTEM MAIN RELAY
JUNCTION CONNECTOR
B 2
O(*2)
W–B
Y
Y–B
Y–R
B17 A , B18 B
BATTERY ECU

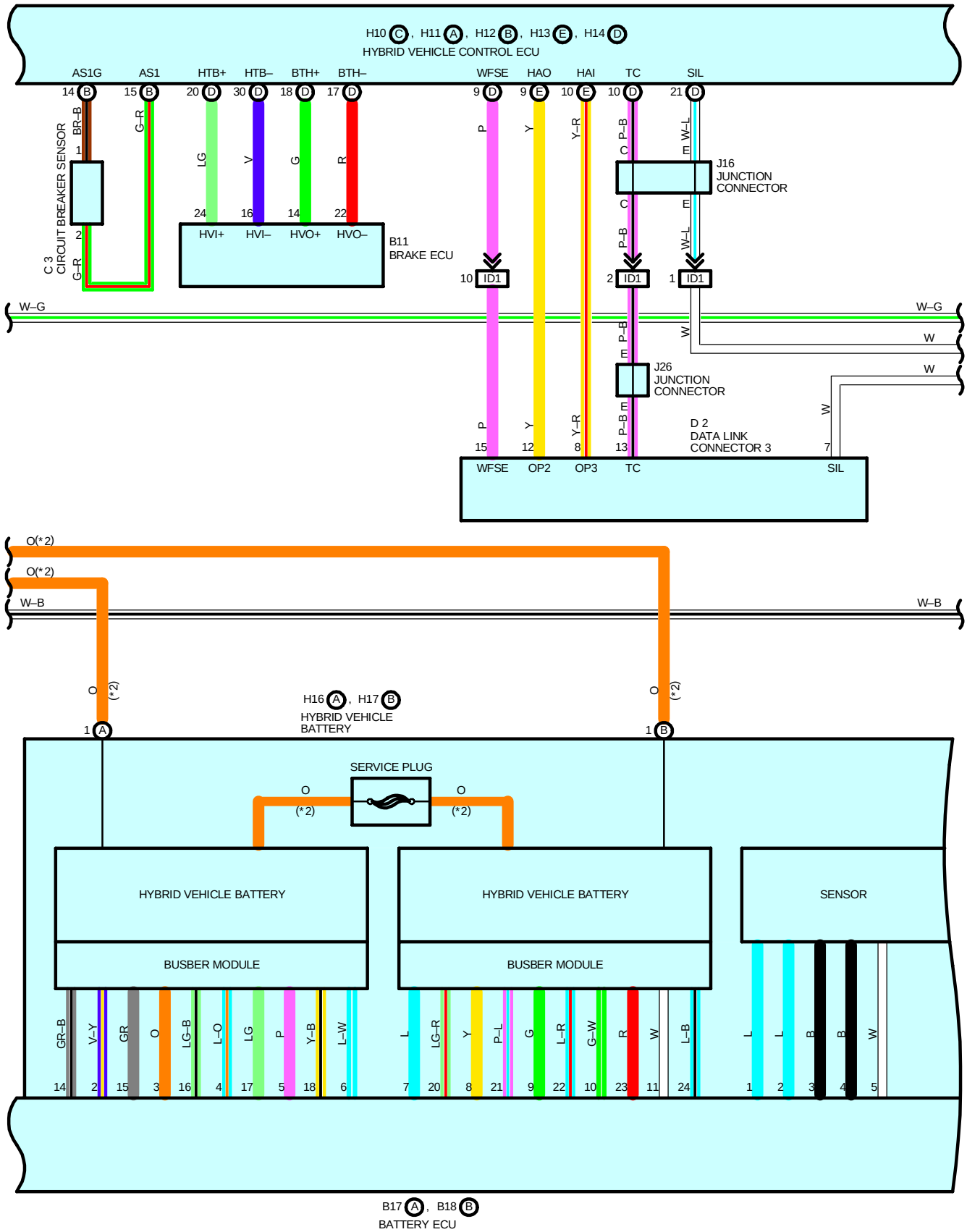
H10 C, H11 A, H12 B, H13 E, H14 D
HYBRID VEHICLE CONTROL ECU
AS1G
AS1
HTB+
HTB–
BTH+
BTH–
WFSE
HAO
HAI
TC
SIL
C 3
CIRCUIT BREAKER SENSOR
B11
BRAKE ECU
HVI+
HVI–
HVO+
HVO–
J16
JUNCTION
CONNECTOR
J26
JUNCTION
CONNECTOR
D 2
DATA LINK
CONNECTOR 3
ID1
W–G
W–B
O(*2)
H16 A, H17 B
HYBRID VEHICLE
BATTERY
SERVICE PLUG
HYBRID VEHICLE BATTERY
BUSBER MODULE
SENSOR
B17 A, B18 B
BATTERY ECU

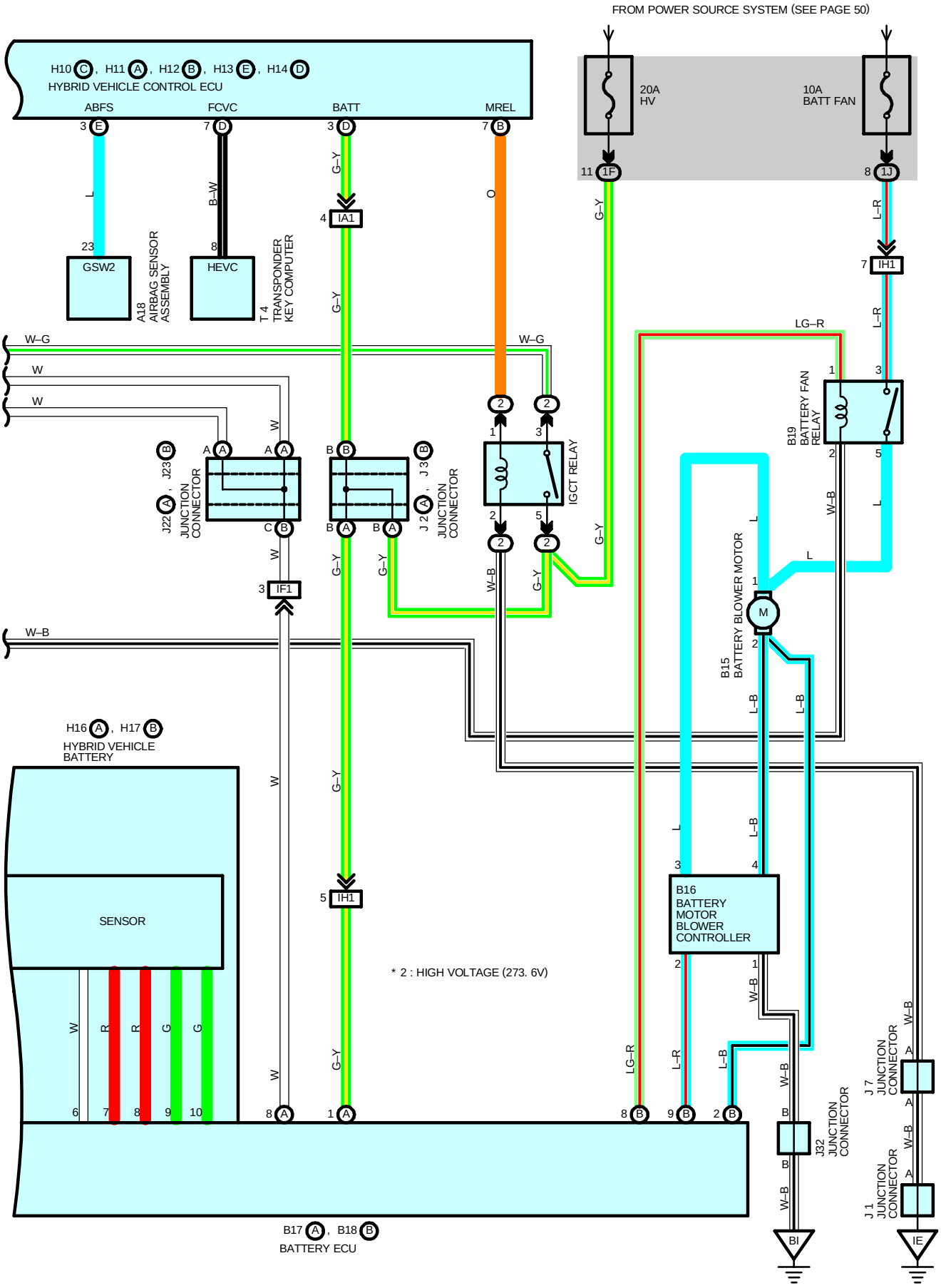
FROM POWER SOURCE SYSTEM (SEE PAGE 50)
H10 C , H11 A , H12 B , H13 E , H14 D
HYBRID VEHICLE CONTROL ECU
ABFS
FCVC
BATT
MREL
20A HV
10A BATT FAN
GSW2
A18 AIRBAG SENSOR ASSEMBLY
HEVC
T 4 TRANSPONDER KEY COMPUTER
IA1
IH1
IF1
IGCT RELAY
B19 BATTERY FAN RELAY
B15 BATTERY BLOWER MOTOR
J22 , J23 JUNCTION CONNECTOR
J 2 , J 3 JUNCTION CONNECTOR
B16 BATTERY MOTOR BLOWER CONTROLLER
H16 A , H17 B
HYBRID VEHICLE BATTERY
SENSOR
* 2 : HIGH VOLTAGE (273. 6V)
J32 JUNCTION CONNECTOR
J 7 JUNCTION CONNECTOR
J 1 JUNCTION CONNECTOR
B17 A , B18 B
BATTERY ECU
W–G
W
G–Y
L
B–W
O
L–R
LG–R
W–B
L–B
R
G

TOYOTA HYBRID SYSTEM

SYSTEM OUTLINE

FEATURES OF TOYOTA HYBRID SYSTEM

This system controls the following modes in order to achieve the most efficient operations to match the driving conditions.

(1) Supply of electrical power from the HV battery to motor generator no.2 provides force to drive the wheels.

(2) While the tires are driven by the engine via the planetary gears, motor generator no.1 is driven via the planetary gears to supply electricity to motor generator no.2 to drive the wheels.

(3) When the vehicle is decelerating, kinetic energy from the wheels is recovered and converted into electrical energy and used to recharge the HV battery by means of motor generator no.2.

The hybrid vehicle control ECU switches between these modes (1, 2, 1+2, or 3) according to the driving conditions. However, when the state of charge of the HV battery is low, the HV battery is charged by the engine by turning motor generator no.1.

CRUISE CONTROL OPERATION

Cruise control is the speed control device, which sets the desired speed by just operating the switch on the control panel without pressing the accelerator pedal. This device is used when you would like to drive the vehicle at the fixed speed.

1. SET CONTROL

If you operate the SET/COAST switch when driving (The available range of set speed: between about 40 and 200 km/h) with the main switch is ON (When power indicator comes on), the device memorizes vehicle's speed when switch is off and controls the fixed speed.

2. SET SPEED CONTROL

This device compares the vehicle's running speed and the memorized speed, and controls the driving power of the motor and the engine by calculating the cruise control requirements so that both speed become equivalent.

3. COAST CONTROL

If the SET/COAST switch is continued to be ON during the running with the cruise control, the device recognizes the cruise control requirement is at 0 and decelerates the vehicle's speed. Then the device memorizes the speed when the switch is off in order to control the fixed speed.

In each time you operate SET/COAST switch momentarily (For about 0.5 second), the memorized speed is decreased in about 1.5 km/h. However, in case of the tap–down operation with more than 5–km/h gap between the memorized speed and vehicle's running speed, the device memorizes the vehicle's speed when the switch is off and controls the fixed speed.

4. ACCEL CONTROL

If the RESUME/ACCEL switch is continued to be ON during the running with the cruise control, the device recognizes the cruise control is on the acceleration side and accelerates the vehicle's speed. Then the running speed when the switch is off is memorized to control the fixed speed.

In each time you operate RESUME/ACCEL switch momentarily (For about 0.5 second), the memorized speed is increased in about 1.5 km/h. However, if there is more than 5–km/h gap between the memorized speed and vehicle's running speed, this operation does not change the memorized speed. (Tap–up operation is not available.)

5. RESUME CONTROL

If the running speed is faster than the low speed limit after the cruise control is canceled manually, the fixed speed is controlled by the OFF–ON operation of RESUME/ACCEL switch, so that the vehicle's speed returns to the memorized speed at the time the cruise control is released.

6. MANUAL CANCEL CONTROL

When each of the following signals is input during driving with cruise control, the cruise control is released with turning the cruise control requirement to 0. (The memorized speed is maintained when following signals except the signal, main switch OFF is input.)

* Stop light switch ON (Pressing the brake pedal)
* Control switch's cancel switch ON
* Main switch OFF

7. AUTO CANCEL FUNCTION

A) The memorized speed is erased and the control is canceled if the following conditions occur. The power indicator blinks at that time until the main switch is turned ON. The speed control is unavailable unless the main switch is turned ON again.

* When the stop light switch breaks or short–circuits.
* When sudden change of the running speed signal occur.

B) The memorized speed is erased and the control is canceled if the following conditions occur.

* When the malfunction of the stop light switch input circuit occurs.
* When the running speed becomes slower than 40km/h.
* When the running speed becomes slower than the speed that 16 km/h subtracted from the memorized speed.

8. REGENERATIVE SYSTEM OPERATION

This system operates the motor as a generator to change the kinetic energy of the vehicle into the electricity when accel pedal release or foot braking controls the vehicle, and store the electricity in the battery.

SERVICE HINTS

C14 CRUISE CONTROL SW [COMB. SW]

5–4 : Approx. **1540** Ω with CANCEL SW on
Approx. **240** Ω with RES/ACC SW on
Approx. **630** Ω with SET/COAST SW on

○ : PARTS LOCATION

Code	See Page	Code	See Page	Code	See Page
A7	36	H10 C	37	J18 A	37
A13	36	H11 A	37	J19 B	37
A18	36	H12 B	37	J21	37
B8	36	H13 E	37	J22 A	37
B11	36	H14 D	37	J23 B	37
B15	38	H16 A	38	J24 A	37
B16	38	H17 B	38	J25 B	37
B17 A	38	I9 D	35	J26	37
B18 B	38	I10 C	35	J27 A	37
B19	38	I11 A	35	J28 B	37
C3	34	I12 B	35	J32	38
C4 A	34	I13 E	35	A	38
C5 B	34	I14 F	35	J33 B	38
C10 A	36	I15	37	M2 A	35
C11 B	36	I17	38	M3 B	35
C14	36	J1	37	M4 C	35
D2	36	J2 A	37	P1	37
E9 C	36	J3 B	37	S3	37
E10 D	36	J7	37	S8 A	39
F10	34	J8 A	37	S9 B	39
F12 C	34	J9 B	37	S10 C	39
F13 D	34	J11	37	S11 D	39
F17	38	J16	37	S12 E	39
F18	38	J17	37	T4	37
G1	37	J18	37	W3	35

: RELAY BLOCKS

Code	See Page	Relay Blocks (Relay Block Location)
2	23	Engine Room R/B No.2 (Right Side of Reserve Tank)

: JUNCTION BLOCK AND WIRE HARNESS CONNECTOR

Code	See Page	Junction Block and Wire Harness (Connector Location)
1A	27	Engine Wire and Engine Room J/B (Engine Compartment Left)
1B	27	Engine Room Main Wire and Engine Room J/B (Engine Compartment Left)
1F		
1J		
1K		
2A	30	Instrument Panel Wire and Instrument Panel J/B (Cowl Side Panel LH)
2B		
2C		
2D		
2G	31	Engine Room Main Wire and Instrument Panel J/B (Cowl Side Panel LH)
2K	31	Cowl Wire and Instrument Panel J/B (Cowl Side Panel LH)

: CONNECTOR JOINING WIRE HARNESS AND WIRE HARNESS

Code	See Page	Joining Wire Harness and Wire Harness (Connector Location)
IA1	42	Engine Room Main Wire and Cowl Wire (Cowl Side Panel LH)
IA2		
IB1	42	Floor Wire and Cowl Wire (Cowl Side Panel LH)
ID1	42	Instrument Panel Wire and Cowl Wire (Left Kick Panel)
IE1	42	Instrument Panel Wire and Engine Room Main Wire (Left Kick Panel)
IF1	42	Instrument Panel Wire and Floor Wire (Left Kick Panel)
IF2		
IH1	42	Floor Wire and Engine Room Main Wire (Left Kick Panel)
IK1	44	Engine Wire and Engine Room Main Wire (Right Kick Panel)

: GROUND POINTS

Code	See Page	Ground Points Location
EC	40	Engine Compartment Left
ID	42	Cowl Side Panel LH
IE		
IG	42	Cowl Side Panel RH
IH	42	Right Kick Panel
BI	46	Left Side of Rear Pillar
BJ	46	Right Side of Rear Pillar

: SPLICE POINTS

Code	See Page	Wire Harness with Splice Points	Code	See Page	Wire Harness with Splice Points
E5	40	Engine Room Main Wire	I8	44	Engine Wire
I2	44	Instrument Panel Wire	I9	44	Engine Room Main Wire
I4	44	Cowl Wire	B2	46	Floor Wire

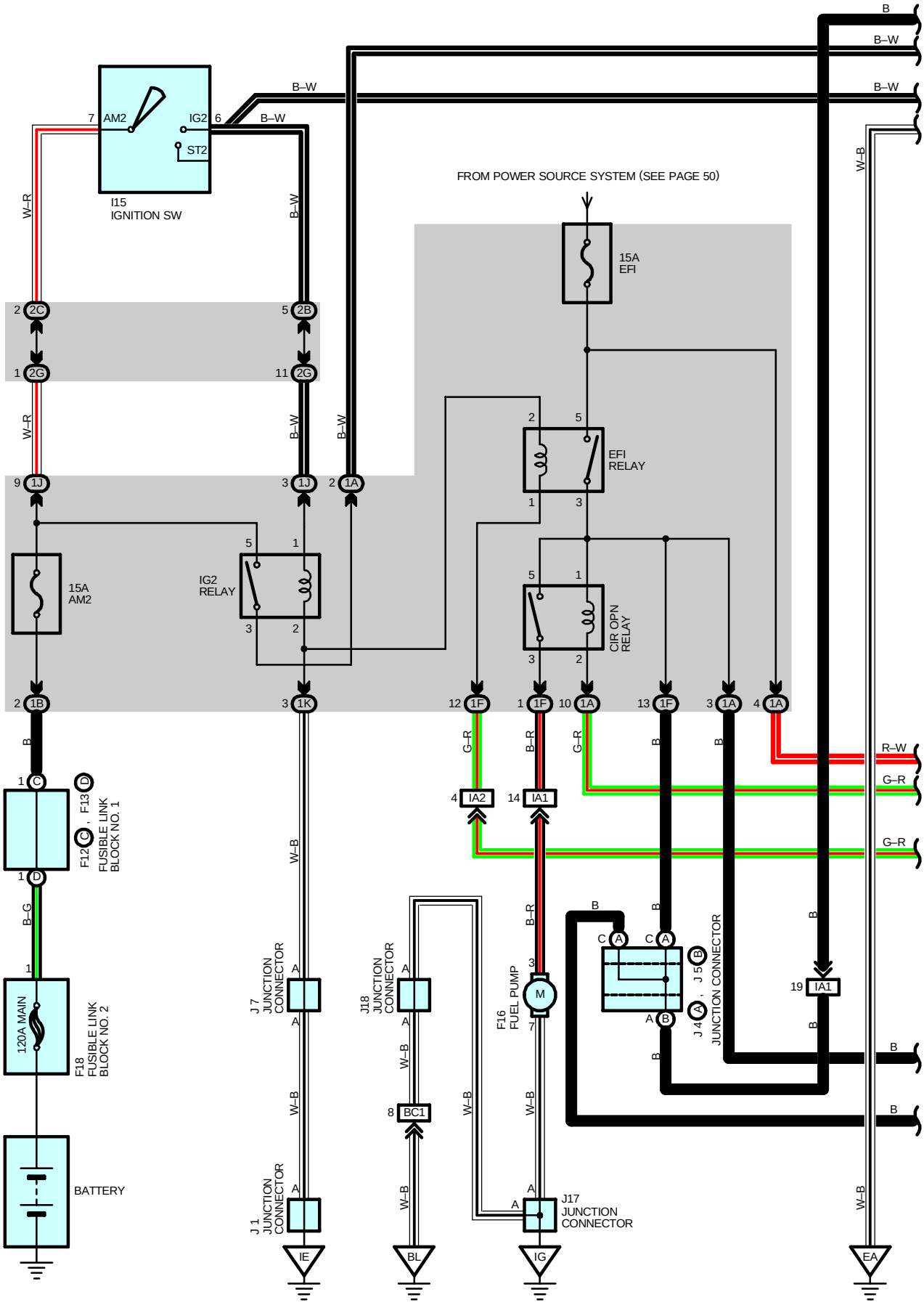
FROM POWER SOURCE SYSTEM (SEE PAGE 50)
I15
IGNITION SW
7 AM2
IG2 6
ST2
B–W
W–R
15A
AM2
15A
EFI
EFI
RELAY
IG2
RELAY
CIR OPN
RELAY
2C
2B
2G
1J
1A
1B
1K
1F
1C
1D
F13
F12
FUSIBLE LINK
BLOCK NO. 1
B–G
120A MAIN
F18
FUSIBLE LINK
BLOCK NO. 2
BATTERY
J 7
JUNCTION
CONNECTOR
J 1
JUNCTION
CONNECTOR
J18
JUNCTION
CONNECTOR
F16
FUEL PUMP
J17
JUNCTION
CONNECTOR
J 5
J 4
JUNCTION CONNECTOR
IA2
IA1
BC1
IE
BL
IG
EA
B
G–R
B–R
R–W
W–B

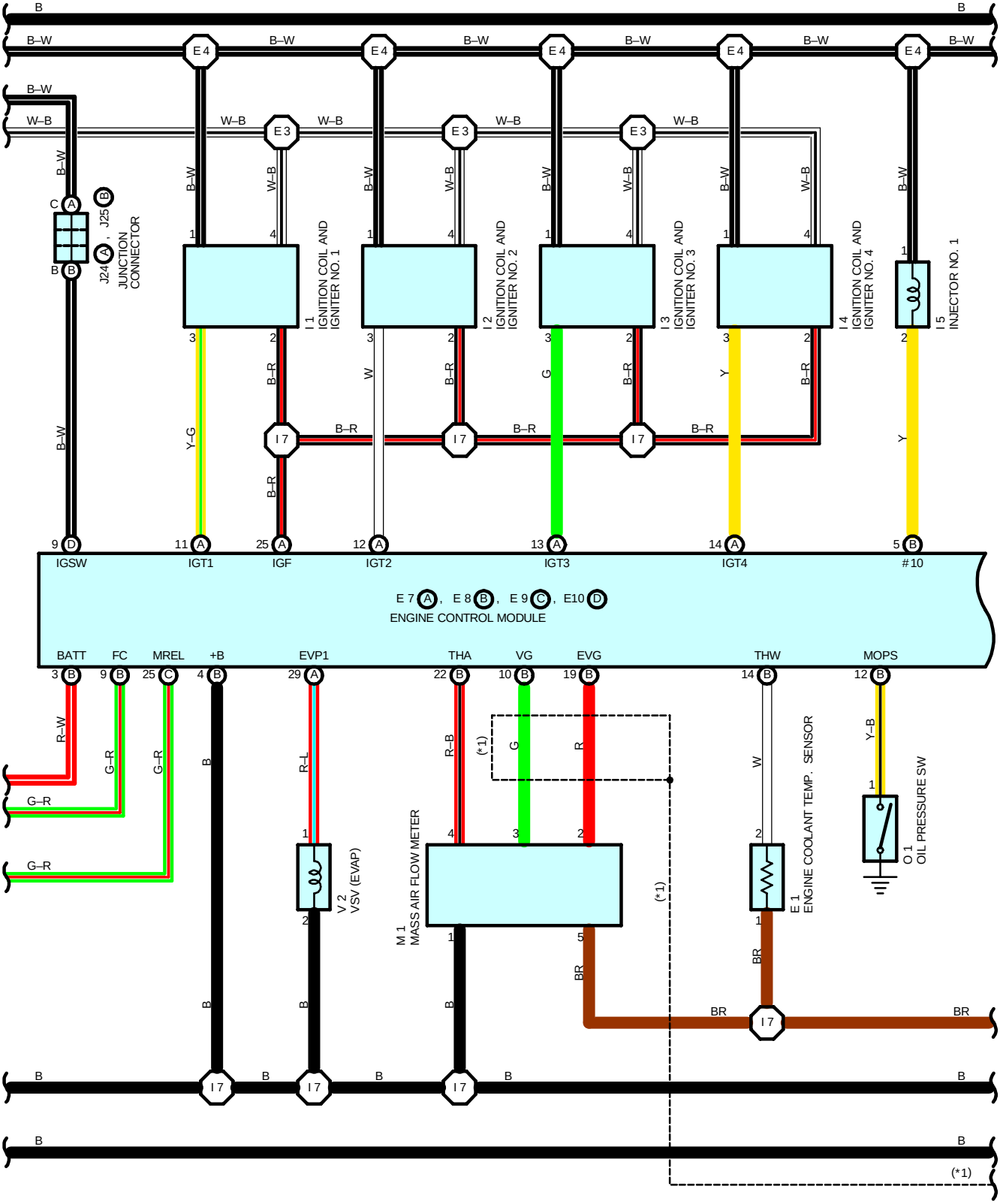
B
B–W
W–B
E 4
E 3
J24 , J25
JUNCTION CONNECTOR
I 1
IGNITION COIL AND IGNITER NO. 1
I 2
IGNITION COIL AND IGNITER NO. 2
I 3
IGNITION COIL AND IGNITER NO. 3
I 4
IGNITION COIL AND IGNITER NO. 4
I 5
INJECTOR NO. 1
I 7
Y–G
B–R
W
G
Y
IGSW
IGT1
IGF
IGT2
IGT3
IGT4
#10
E 7 , E 8 , E 9 , E10
ENGINE CONTROL MODULE
BATT
FC
MREL
+B
EVP1
THA
VG
EVG
THW
MOPS
R–W
G–R
R–L
R–B
G
R
W
Y–B
V 2
VSV (EVAP)
M 1
MASS AIR FLOW METER
E 1
ENGINE COOLANT TEMP. SENSOR
O 1
OIL PRESSURE SW
(*1)
BR
(*1)

* 1 : SHIELDED

ENGINE CONTROL

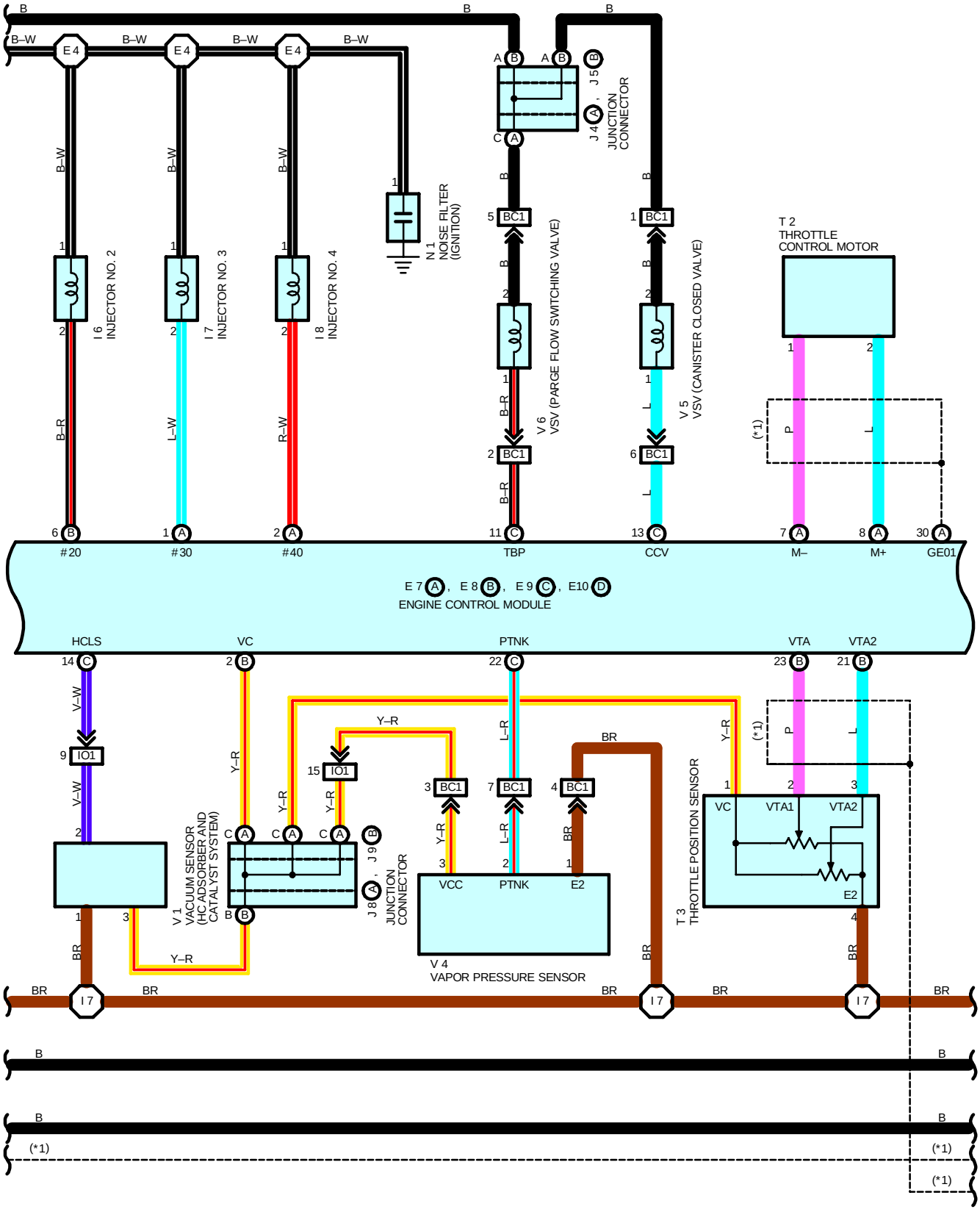

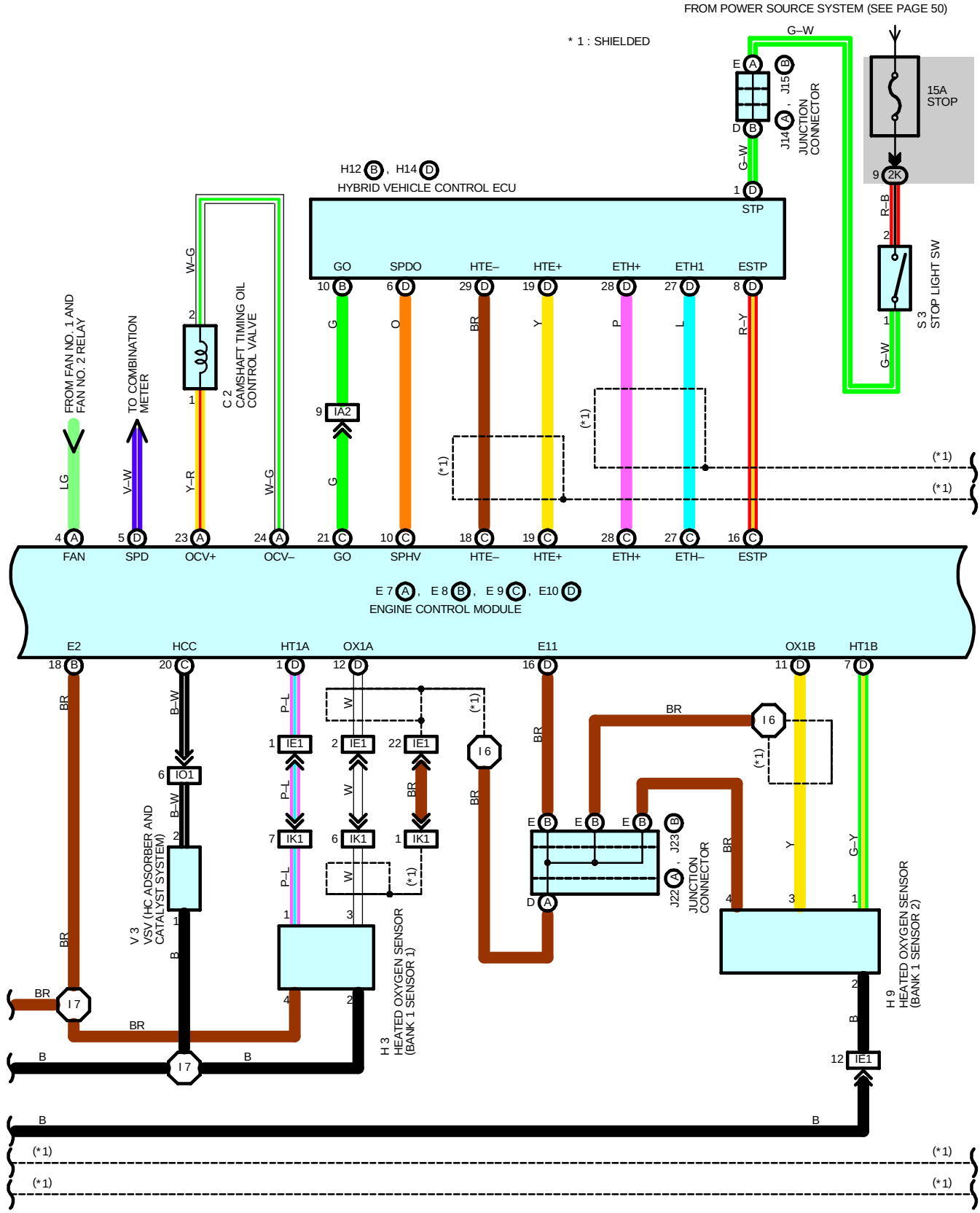
FROM POWER SOURCE SYSTEM (SEE PAGE 50)
* 1 : SHIELDED
G–W
E A B
D B A
J15 , J14
JUNCTION CONNECTOR
15A STOP
9 2K
R–B
2
1
G–W
S 3
STOP LIGHT SW
H12 B , H14 D
HYBRID VEHICLE CONTROL ECU
1 D
STP
GO SPDO HTE– HTE+ ETH+ ETH1 ESTP
10 B 6 D 29 D 19 D 28 D 27 D 8 D
G O BR Y P L R–Y
9 IA2
G
(*1)
(*1)
(*1)
(*1)
FROM FAN NO. 1 AND FAN NO. 2 RELAY
TO COMBINATION METER
W–G
2
1
C 2
CAMSHAFT TIMING OIL CONTROL VALVE
LG
V–W
Y–R
W–G
4 A 5 D 23 A 24 A 21 C 10 C 18 C 19 C 28 C 27 C 16 C
FAN SPD OCV+ OCV– GO SPHV HTE– HTE+ ETH+ ETH– ESTP
E 7 A , E 8 B , E 9 C , E10 D
ENGINE CONTROL MODULE
E2 HCC HT1A OX1A E11 OX1B HT1B
18 B 20 C 1 D 12 D 16 D 11 D 7 D
BR B–W P–L W BR BR G–Y
6 IO1
1 IE1 2 IE1 22 IE1
7 IK1 6 IK1 1 IK1
I 6
I 6
I 7
I 7
V 3
VSV (HC ADSORBER AND CATALYST SYSTEM)
H 3
HEATED OXYGEN SENSOR (BANK 1 SENSOR 1)
E B E B E B
D A
J23 , J22
JUNCTION CONNECTOR
Y
H 9
HEATED OXYGEN SENSOR (BANK 1 SENSOR 2)
12 IE1
B
(*1)
(*1)
(*1)
(*1)

ENGINE CONTROL

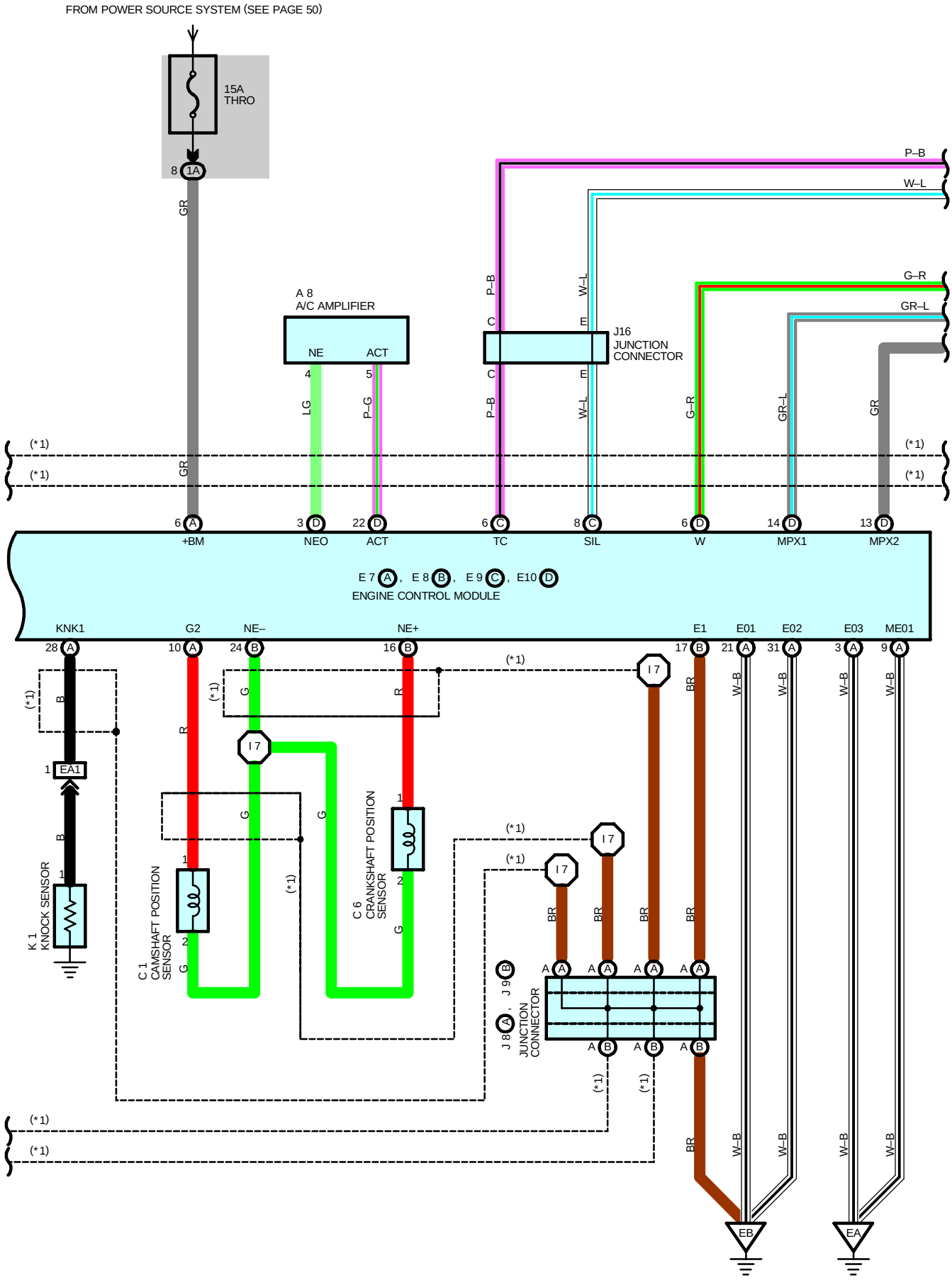

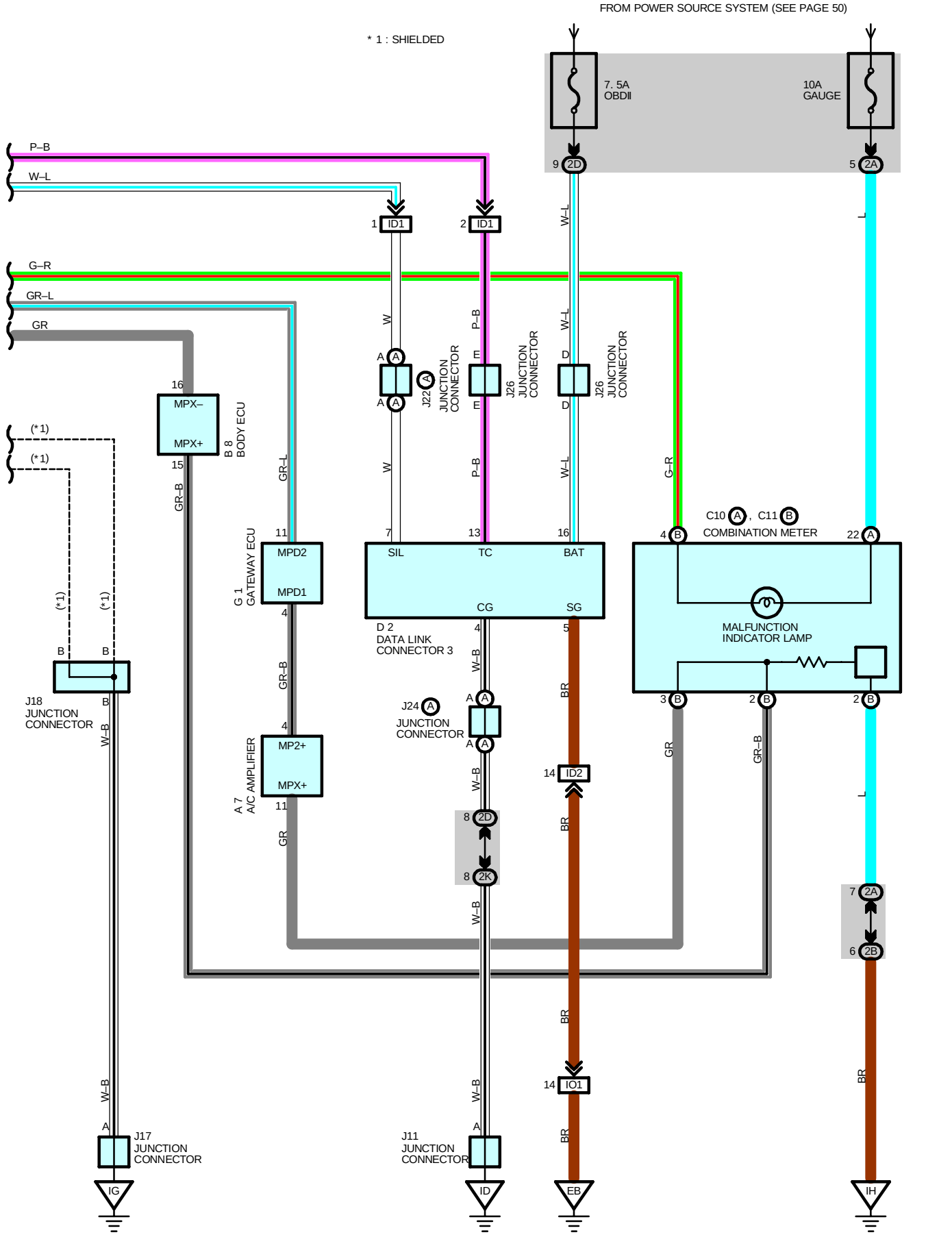
FROM POWER SOURCE SYSTEM (SEE PAGE 50)
* 1 : SHIELDED
7. 5A
OBDII
10A
GAUGE
P–B
W–L
G–R
GR–L
GR
(*1)
(*1)
MPX–
MPX+
B 8
BODY ECU
GR–B
G 1
GATEWAY ECU
MPD2
MPD1
A 7
A/C AMPLIFIER
MP2+
MPX+
J18
JUNCTION
CONNECTOR
W–B
J17
JUNCTION
CONNECTOR
IG
ID1
W
J22
JUNCTION
CONNECTOR
P–B
J26
JUNCTION
CONNECTOR
W–L
J26
JUNCTION
CONNECTOR
SIL
TC
BAT
CG
SG
D 2
DATA LINK
CONNECTOR 3
J24
JUNCTION
CONNECTOR
J11
JUNCTION
CONNECTOR
ID
ID2
IO1
EB
BR
C10 , C11
COMBINATION METER
MALFUNCTION
INDICATOR LAMP
L
2D
2A
2K
2B
IH

ENGINE CONTROL

SYSTEM OUTLINE

This system utilizes an engine control module and maintains overall control of the engine, transmission and so on. An outline of the engine control is explained here.

1. INPUT SIGNALS

(1) Engine coolant temp. signal circuit

The engine coolant temp. sensor detects the engine coolant temp. and has a built–in thermistor with a resistance which varies according to the engine coolant temp. thus the engine coolant temp. is input in the form of a control signal into TERMINAL THW of the engine control module.

(2) Intake air temp. signal circuit

The intake air temp. sensor is installed in the mass air flow meter and detects the intake air temp., which is input as a control signal into TERMINAL THA of the engine control module.

(3) Oxygen sensor signal circuit

The oxygen density in the exhaust gases is detected and input as a control signal into TERMINALS OX1A and OX1B of the engine control module.

(4) RPM signal circuit

Camshaft position and crankshaft position are detected by the camshaft position sensor and crankshaft position sensor. Camshaft position is input as a control signal to TERMINAL G2 of the engine control module, and engine RPM is input into TERMINAL NE+.

(5) Throttle signal circuit

The throttle position sensor detects the throttle valve opening angle, which is input as a control signal into TERMINALS VTA and VTA2 of the engine control module.

(6) Vehicle speed signal circuit

The vehicle speed signal from brake ECU, detects the vehicle speed and inputs a control signal into TERMINAL SPD of the engine control module via the combination meter.

(7) Battery signal circuit

Voltage is constantly applied to TERMINAL BATT of the engine control module. When the ignition SW is turned on, the voltage for engine control module start–up power supply is applied to TERMINAL +B of the engine control module via EFI relay.

(8) Engine knock signal circuit

Engine knocking is detected by knock sensor and the signal is input into TERMINAL KNK1 of the engine control module as a control signal.

2. CONTROL SYSTEM

* SFI system

  The SFI system monitors the engine condition through the signals, which are input from each sensor to the engine control module. The best fuel injection volume is decided based on this data and the program memorized by the engine control module, and the control signal is output to TERMINALS #10, #20, #30 and #40 of the engine control module to operate the injector. (Inject the fuel). The SFI system produces control of fuel injection operation by the engine control module in response to the driving conditions.

* ESA system

  The ESA system monitors the engine condition through the signals, which are input to the engine control module from each sensor. The best ignition timing is detected according to this data and the memorized data in the engine control module, and the control signal is output to TERMINALS IGT1, IGT2, IGT3 and IGT4. This signal controls the ignition coil and igniter to provide the best ignition timing for the driving conditions.

* Fuel pump control system

  The engine control module operation outputs to TERMINAL FC and controls the CIR OPN relay. Thus controls the fuel pump drive speed in response to conditions.

3. DIAGNOSIS SYSTEM

With the diagnosis system, when there is a malfunctioning in the engine control module signal system, the malfunction system is recorded in the memory. The malfunctioning system can then be found by reading the display (Code) of the malfunction indicator lamp.

4. FAIL–SAFE SYSTEM

When a malfunction occurs in any system, if there is a possibility of engine trouble being caused by continued control based on the signals from that system, the fail–safe system either controls the system by using data (Standard values) recorded in the engine control module memory or else stops the engine.

SERVICE HINTS

E7 (A), E8 (B), E9 (C), E10 (D) ENGINE CONTROL MODULE

BATT–E1 : Always approx. **9**–**14** volts
+B–E1 : **9**–**14** volts with the ignition SW on and the engine stopping
VC–E2 : **4.5**–**5.5** volts with the ignition SW on and the engine stopping
IGF–E1 : Pulse generation with the engine idling
THA–E2 : **0.5**–**3.4** volts with the engine idling and the intake air temp. **20**˚C (**68**˚F)
THW–E2 : **0.2**–**1.0** volts with the engine idling and the engine coolant temp. **80**˚C (**176**˚F)
W–E1 : **9**–**14** volts with the engine idling
: **0**–**3** volts with the ignition SW on and the engine coolant temp. sensor connector disconnects
ESTP–E1 : **9**–**14** volts with the brake pedal depressed
FC–E01 : **9**–**14** volts with the ignition SW on and the engine stopping
: **0**–**3** volts with the engine idling
+BM–E1 : Always approx. **9**–**14** volts
MREL–E1 : **9**–**14** volts with the ignition SW on and the engine stopping
EVP1–E1 : **9**–**14** volts with the ignition SW on and the engine stopping
HT1A, HT1B : **9**–**14** volts with the ignition SW on and the engine stopping
TC–E1 : **9**–**14** volts with the ignition SW on and the engine stopping
KNK1–E2 : Pulse generation with the engine idling
NE+, G2–NE–: Pulse generation with the engine idling
OCV+ –OCV– : Pulse generation with the ignition SW on and the engine stopping
IGT1, IGT2, IGT3, IGT4–E1 : Pulse generation with the engine idling
#10, #20, #30, #40–E01 : Pulse generation with the engine idling
E01, E02, E03, E1, E2, ME01–GROUND : Always continuity

E1 ENGINE COOLANT TEMP. SENSOR

2–1 : Approx. **14.96** kΩ (**–20** ˚C, **–4** ˚F)
Approx. **2.44** kΩ (**20** ˚C, **68** ˚F)
Approx. **0.31** kΩ (**80** ˚C, **176** ˚F)
Approx. **0.14** kΩ (**110** ˚C, **230** ˚F)

○ : PARTS LOCATION

Code	See Page	Code	See Page	Code	See Page
A7	36	H12 B	37	J17	37
A8	36	H14 D	37	J18	37
B8	36	I1	35	J22 A	37
C1	34	I2	35	J23 B	37
C2	34	I3	35	J24 A	37
C6	34	I4	35	J25 B	37
C10 A	36	I5	35	J26	37
C11 B	36	I6	35	K1	35
D2	36	I7	35	M1	35
E1	34	I8	35	N1	35
E7 A	36	I15	37	O1	35
E8 B	36	J1	37	S3	37
E9 C	36	J4 A	37	T2	35
E10 D	36	J5 B	37	T3	35
F12 C	34	J7	37	V1	35
F13 D	34	J8 A	37	V2	35
F16	38	J9 B	37	V3	35
F18	38	J11	37	V4	39
G1	37	J14 A	37	V5	39
H3	34	J15 B	37	V6	39
H9	37	J16	37		

ENGINE CONTROL



: JUNCTION BLOCK AND WIRE HARNESS CONNECTOR

Code	See Page	Junction Block and Wire Harness (Connector Location)
1A	27	Engine Wire and Engine Room J/B (Engine Compartment Left)
1B	27	Engine Room Main Wire and Engine Room J/B (Engine Compartment Left)
1F		
1J		
1K		
2A	30	Instrument Panel Wire and Instrument Panel J/B (Cowl Side Panel LH)
2B		
2C		
2D		
2G	31	Engine Room Main Wire and Instrument Panel J/B (Cowl Side Panel LH)
2K	31	Cowl Wire and Instrument Panel J/B (Cowl Side Panel LH)



: CONNECTOR JOINING WIRE HARNESS AND WIRE HARNESS

Code	See Page	Joining Wire Harness and Wire Harness (Connector Location)
EA1	40	Engine Wire and Engine No.4 Wire (Near the Radiator Fan)
IA1	42	Engine Room Main Wire and Cowl Wire (Cowl Side Panel LH)
IA2		
ID1	42	Instrument Panel Wire and Cowl Wire (Left Kick Panel)
ID2		
IE1	42	Instrument Panel Wire and Engine Room Main Wire (Left Kick Panel)
IK1	44	Engine Wire and Engine Room Main Wire (Right Kick Panel)
IO1	44	Engine Wire and Cowl Wire (Right Kick Panel)
BC1	46	Cowl Wire and Fuel Tank Wire (Near the Fuel Tank)



: GROUND POINTS

Code	See Page	Ground Points Location
EA	40	Engine Block
EB		
ID	42	Cowl Side Panel LH
IE		
IG	42	Cowl Side Panel RH
IH	42	Right Kick Panel
BL	46	Near the Fuel Tank



: SPLICE POINTS

Code	See Page	Wire Harness with Splice Points	Code	See Page	Wire Harness with Splice Points
E3	40	Engine Wire	I6	44	Instrument Panel Wire
E4			I7	44	Engine Wire

HYBRID VEHICLE IMMOBILISER SYSTEM

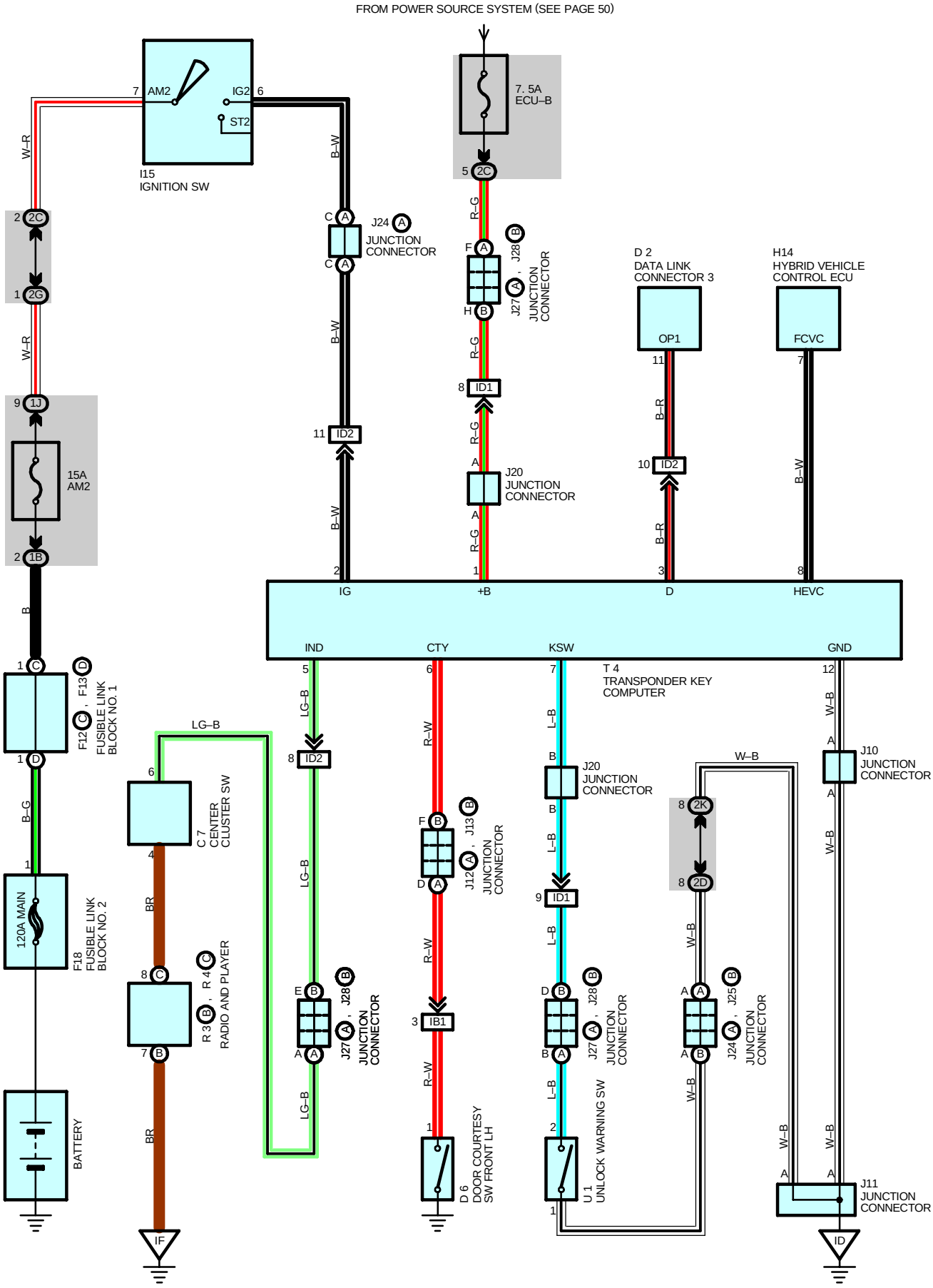

SERVICE HINTS

T4 TRANSPONDER KEY COMPUTER

1–GROUND : Always approx. **12** volts

12–GROUND : Always continuity

U1 UNLOCK WARNING SW

1–2 : Closed with the ignition key in cylinder

: PARTS LOCATION

Code	See Page	Code	See Page	Code	See Page
C7	36	I15	37	J25 B	37
D2	36	J10	37	J27 A	37
D6	38	J11	37	J28 B	37
F12 C	34	J12 A	37	R3 B	37
F13 D	34	J13 B	37	R4 C	37
F18	38	J20	37	T4	37
H14	37	J24 A	37	U1	37

: JUNCTION BLOCK AND WIRE HARNESS CONNECTOR

Code	See Page	Junction Block and Wire Harness (Connector Location)
1B	27	Engine Room Main Wire and Engine Room J/B (Engine Compartment Left)
1J		
2C	30	Instrument Panel Wire and Instrument Panel J/B (Cowl Side Panel LH)
2D		
2G	31	Engine Room Main Wire and Instrument Panel J/B (Cowl Side Panel LH)
2K	31	Cowl Wire and Instrument Panel J/B (Cowl Side Panel LH)

: CONNECTOR JOINING WIRE HARNESS AND WIRE HARNESS

Code	See Page	Joining Wire Harness and Wire Harness (Connector Location)
IB1	42	Floor Wire and Cowl Wire (Cowl Side Panel LH)
ID1	42	Instrument Panel Wire and Cowl Wire (Left Kick Panel)
ID2		

: GROUND POINTS

Code	See Page	Ground Points Location
ID	42	Cowl Side Panel LH
IF	42	Left Kick Panel

HEADLIGHT (w/ DAYTIME RUNNING LIGHT)

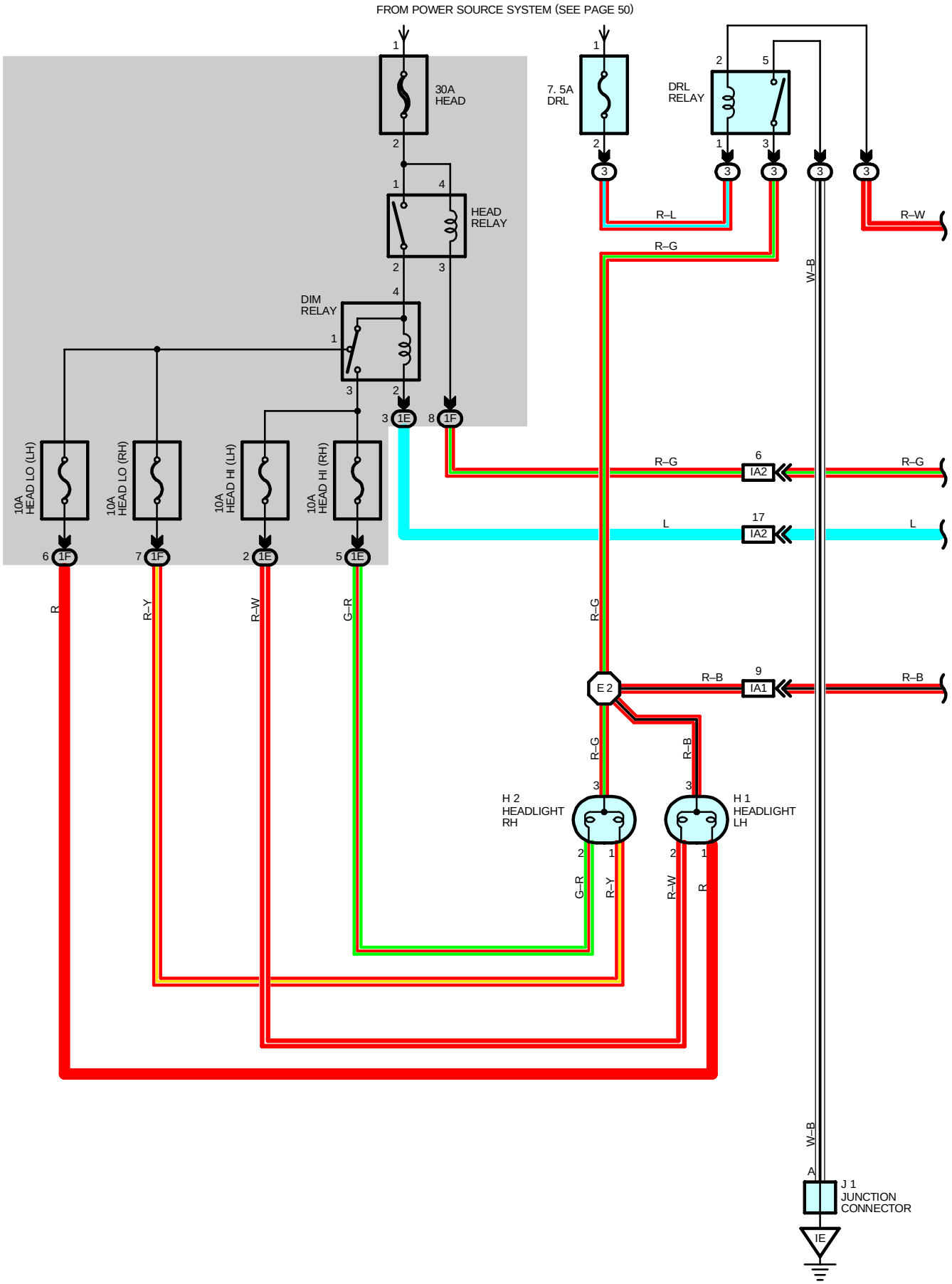

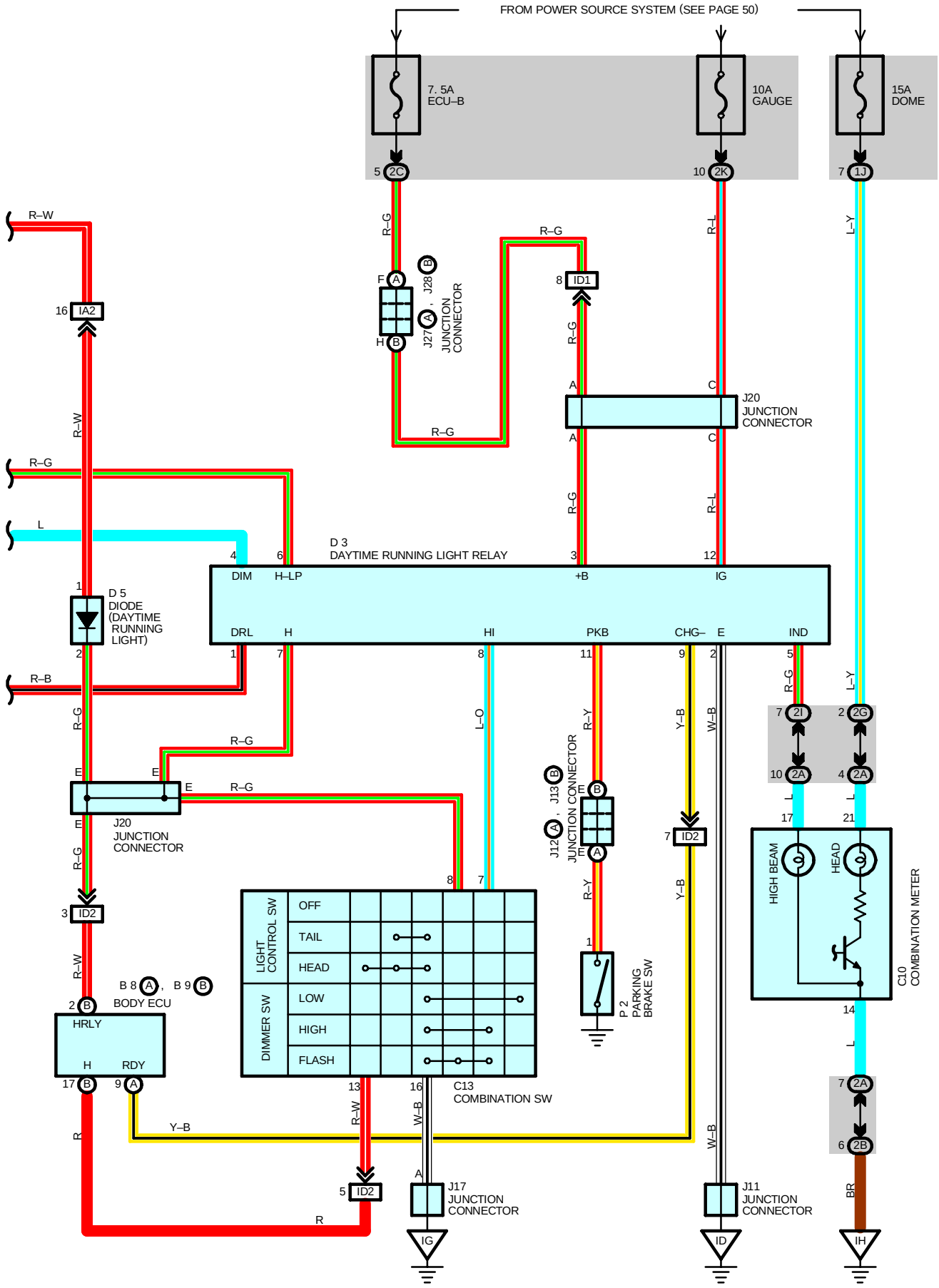
FROM POWER SOURCE SYSTEM (SEE PAGE 50)
7. 5A
ECU–B
10A
GAUGE
15A
DOME
5 2C
10 2K
7 1J
R–W
16 IA2
R–G
L
D 3
DAYTIME RUNNING LIGHT RELAY
4 DIM
6 H–LP
3 +B
12 IG
1
D 5
DIODE
(DAYTIME
RUNNING
LIGHT)
2
DRL
1
H
7
HI
8
PKB
11
CHG–
9
E
2
IND
5
R–B
L–O
R–Y
Y–B
W–B
L–Y
J20
JUNCTION
CONNECTOR
J27 , J28
JUNCTION
CONNECTOR
8 ID1
7 2I
2 2G
10 2A
4 2A
J13 , J12
JUNCTION CONNECTOR
7 ID2
3 ID2
5 ID2
B 8 , B 9
BODY ECU
HRLY
H
RDY
17
9
2
LIGHT
CONTROL SW
OFF
TAIL
HEAD
DIMMER SW
LOW
HIGH
FLASH
13
16
C13
COMBINATION SW
P 2
PARKING
BRAKE SW
HIGH BEAM
HEAD
C10
COMBINATION METER
17
21
14
7 2A
6 2B
J17
JUNCTION
CONNECTOR
J11
JUNCTION
CONNECTOR
IG
ID
IH
R

HEADLIGHT (w/ DAYTIME RUNNING LIGHT)

SYSTEM OUTLINE

When the ignition SW is turned on ST position and "READY" signal from engine control module is sent to the daytime running light relay via body ECU. If the parking brake pedal is depressed (Parking brake SW is on) at that time, the daytime running light system does not operate. If the parking brake pedal is released (Parking brake SW is off), the daytime running light system operates and the low beam headlight comes on.

SERVICE HINTS

HEAD RELAY

1–2 : Closed with the light control SW at **HEAD** position or the dimmer SW at **FLASH** position
Closed with the engine running and the parking brake lever is released (Parking brake SW off)

D3 DAYTIME RUNNING LIGHT RELAY

12–GROUND : Approx. **12** volts with the ignition SW at **ON** position
3–GROUND : Always approx. **12** volts
11–GROUND : Continuity with the parking brake lever pulled up
2–GROUND : Always continuity
8–GROUND : Continuity with the dimmer SW at **HIGH** or **FLASH** position

: PARTS LOCATION

Code	See Page	Code	See Page	Code	See Page
B8 A	36	H1	34	J17	37
B9 B	36	H2	34	J20	37
C10	36	J1	37	J27 A	37
C13	36	J11	37	J28 B	37
D3	36	J12 A	37	P2	37
D5	36	J13 B	37		

: RELAY BLOCKS

Code	See Page	Relay Blocks (Relay Block Location)
3	24	Engine Room R/B No.3 (Engine Compartment Right)

: JUNCTION BLOCK AND WIRE HARNESS CONNECTOR

Code	See Page	Junction Block and Wire Harness (Connector Location)
1E	27	Engine Room Main Wire and Engine Room J/B (Engine Compartment Left)
1F		
1J		
2A	30	Instrument Panel Wire and Instrument Panel J/B (Cowl Side Panel LH)
2B		
2C		
2G	31	Engine Room Main Wire and Instrument Panel J/B (Cowl Side Panel LH)
2I	31	Cowl Wire and Instrument Panel J/B (Cowl Side Panel LH)
2K		

: CONNECTOR JOINING WIRE HARNESS AND WIRE HARNESS

Code	See Page	Joining Wire Harness and Wire Harness (Connector Location)
IA1	42	Engine Room Main Wire and Cowl Wire (Cowl Side Panel LH)
IA2		
ID1	42	Instrument Panel Wire and Cowl Wire (Left Kick Panel)
ID2		

: GROUND POINTS

Code	See Page	Ground Points Location
ID	42	Cowl Side Panel LH
IE		
IG	42	Cowl Side Panel RH
IH	42	Right Kick Panel

: **SPLICE POINTS**

Code	See Page	Wire Harness with Splice Points	Code	See Page	Wire Harness with Splice Points
E2	40	Engine Room Main Wire			

HEADLIGHT (w/o DAYTIME RUNNING LIGHT)

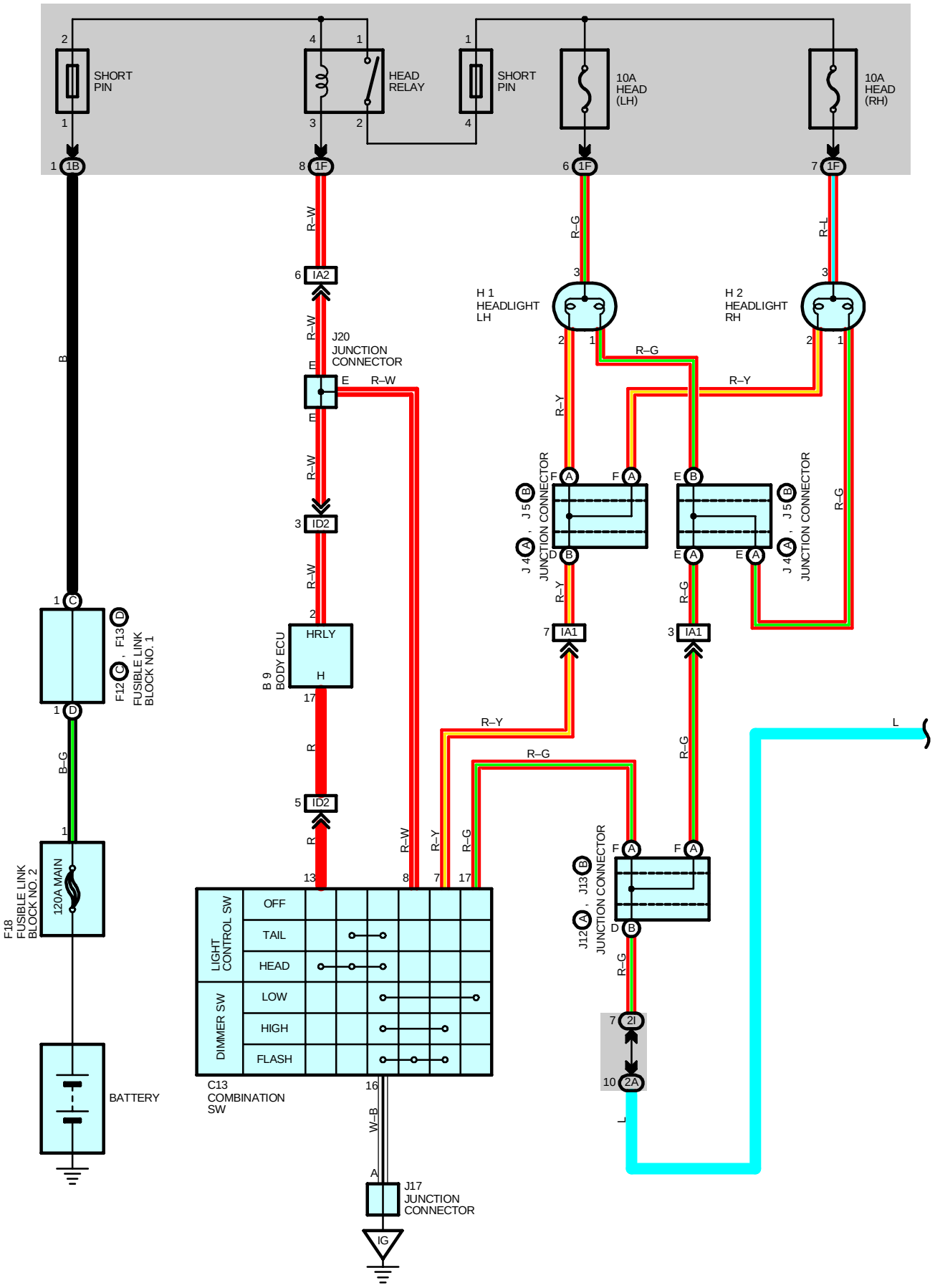

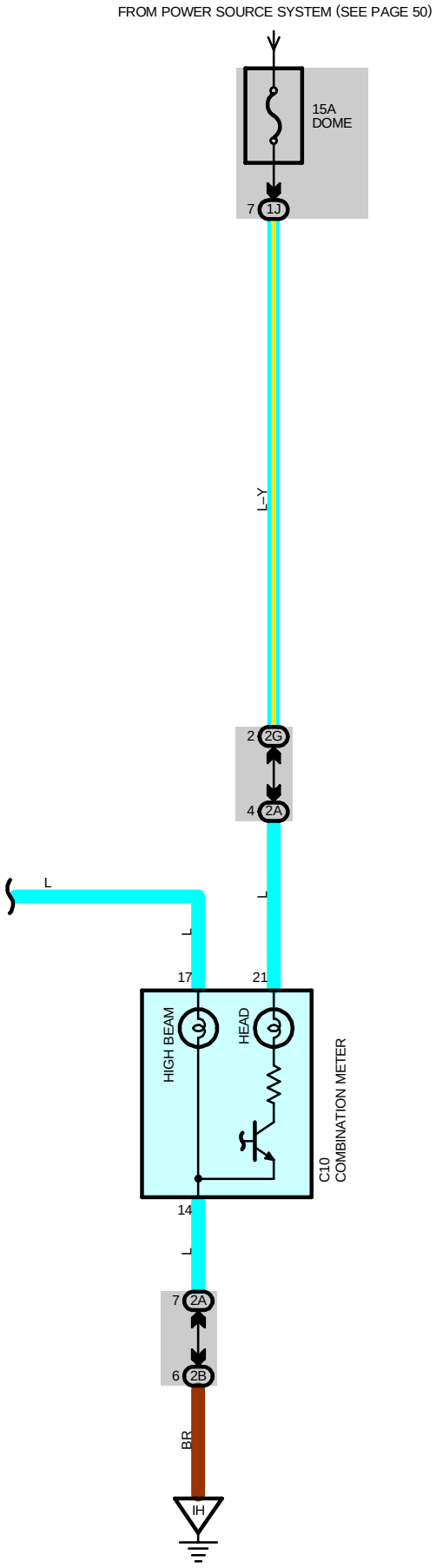
FROM POWER SOURCE SYSTEM (SEE PAGE 50)
15A
DOME
7
1J
L-Y
2
2G
4
2A
L
L
17
21
HIGH BEAM
HEAD
C10
COMBINATION METER
14
L
7
2A
6
2B
BR
IH

HEADLIGHT (w/o DAYTIME RUNNING LIGHT)

SERVICE HINTS

HEAD RELAY

1–2 : Closed with the light control SW at **HEAD** position or the dimmer SW at **FLASH** position

C13 COMBINATION SW

13–16 : Continuity with the light control SW at **HEAD** position
8–16 : Continuity with the dimmer SW at **FLASH** position
7–16 : Continuity with the dimmer SW at **HIGH** or **FLASH** position

: PARTS LOCATION

Code		See Page	Code		See Page	Code		See Page
B9		36	F18		38	J12	A	37
C10		36	H1		34	J13	B	37
C13		36	H2		34	J17		37
F12	C	34	J4	A	37	J20		37
F13	D	34	J5	B	37			

: JUNCTION BLOCK AND WIRE HARNESS CONNECTOR

Code	See Page	Junction Block and Wire Harness (Connector Location)
1B	27	Engine Room Main Wire and Engine Room J/B (Engine Compartment Left)
1F		
1J		
2A	30	Instrument Panel Wire and Instrument Panel J/B (Cowl Side Panel LH)
2B		
2G	31	Engine Room Main Wire and Instrument Panel J/B (Cowl Side Panel LH)
2I	31	Cowl Wire and Instrument Panel J/B (Cowl Side Panel LH)

: CONNECTOR JOINING WIRE HARNESS AND WIRE HARNESS

Code	See Page	Joining Wire Harness and Wire Harness (Connector Location)
IA1	42	Engine Room Main Wire and Cowl Wire (Cowl Side Panel LH)
IA2		
ID2	42	Instrument Panel Wire and Cowl Wire (Left Kick Panel)

: GROUND POINTS

Code	See Page	Ground Points Location
IG	42	Cowl Side Panel RH
IH	42	Right Kick Panel

TAILLIGHT

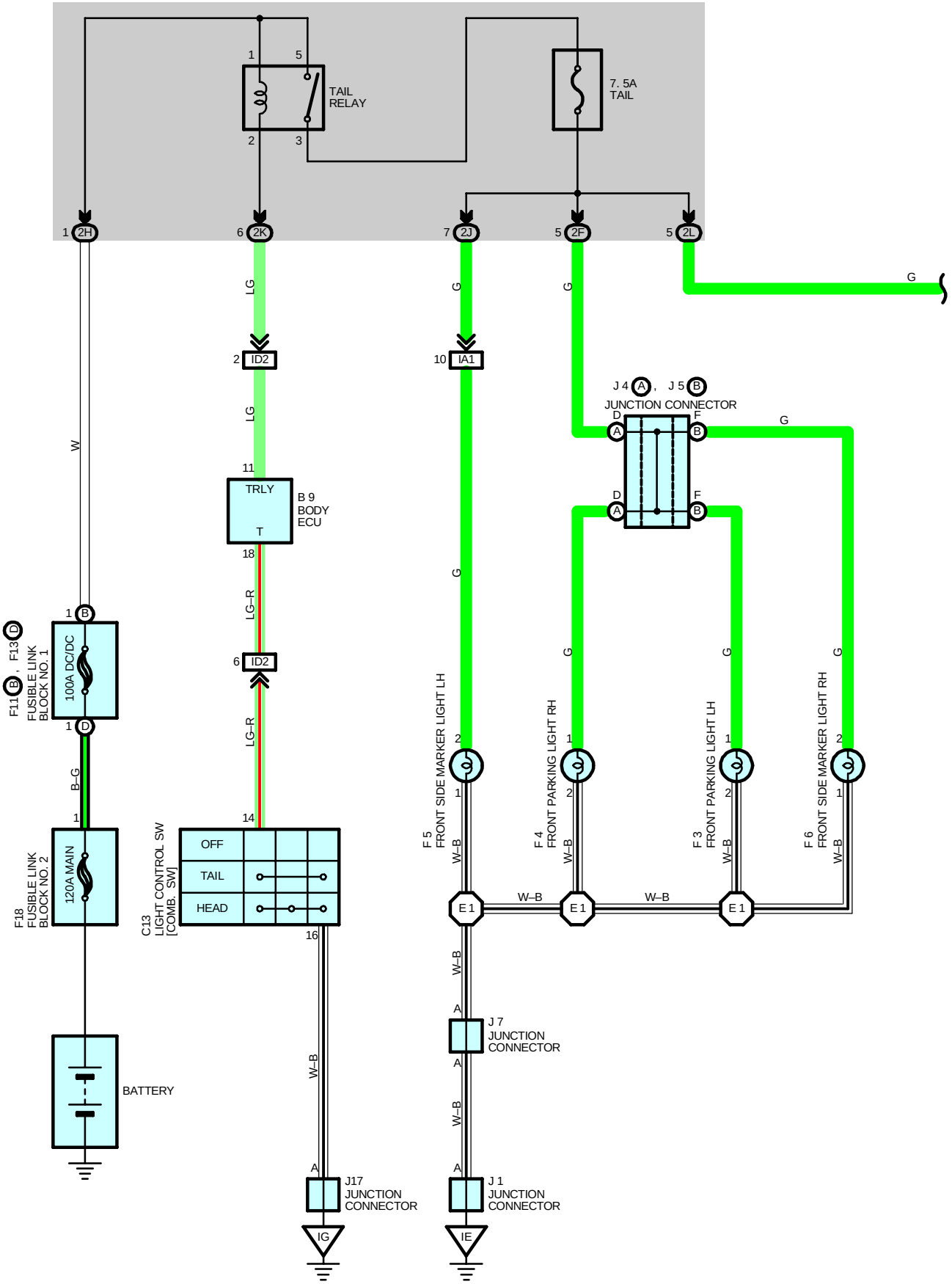
TAIL RELAY
7. 5A TAIL
2H
2K
2J
2F
2L
LG
G
W
2 ID2
10 IA1
11 TRLY
T
B 9 BODY ECU
18
LG–R
6 ID2
14
J 4 A , J 5 B
JUNCTION CONNECTOR
D F
A B
F11 B , F13 D
FUSIBLE LINK BLOCK NO. 1
100A DC/DC
B–G
F18 FUSIBLE LINK BLOCK NO. 2
120A MAIN
C13 LIGHT CONTROL SW [COMB. SW]
OFF
TAIL
HEAD
16
BATTERY
F 5 FRONT SIDE MARKER LIGHT LH
F 4 FRONT PARKING LIGHT RH
F 3 FRONT PARKING LIGHT LH
F 6 FRONT SIDE MARKER LIGHT RH
W–B
E 1
J 7 JUNCTION CONNECTOR
J17 JUNCTION CONNECTOR
J 1 JUNCTION CONNECTOR
IG
IE

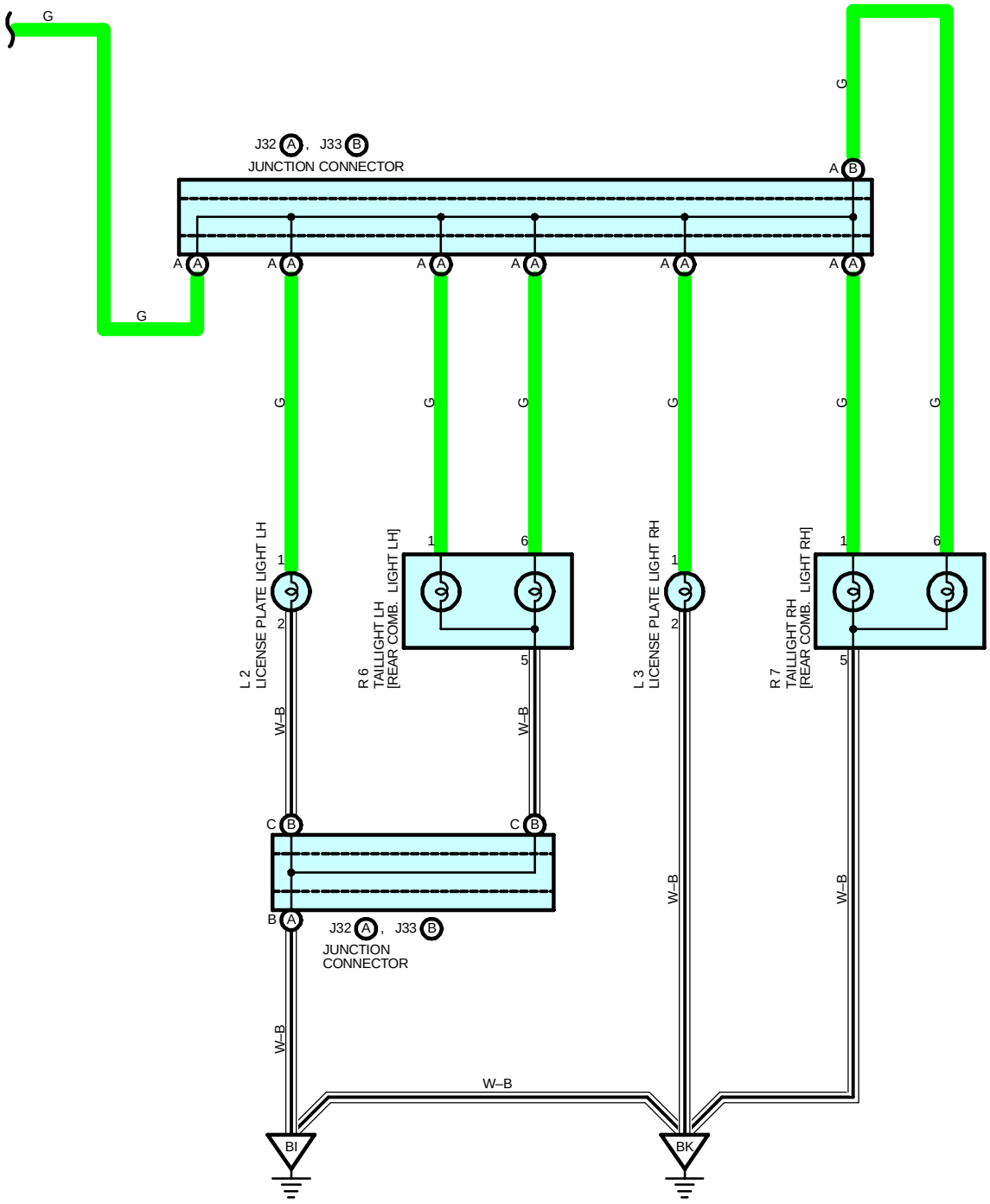
G
J32 A , J33 B
JUNCTION CONNECTOR
A B
A A A A A A A A A A A A
G
G
G
G
G
G
G
G
L 2
LICENSE PLATE LIGHT LH
1
2
W–B
R 6
TAILLIGHT LH
[REAR COMB. LIGHT LH]
1
6
5
W–B
L 3
LICENSE PLATE LIGHT RH
1
2
W–B
R 7
TAILLIGHT RH
[REAR COMB. LIGHT RH]
1
6
5
W–B
C B
C B
B A
J32 A , J33 B
JUNCTION
CONNECTOR
W–B
W–B
BI
BK

TAILLIGHT

SERVICE HINTS

TAIL RELAY

5–3 : Closed with the light control SW at **TAIL** or **HEAD** position

: PARTS LOCATION

Code	See Page	Code	See Page	Code	See Page
B9	36	F13 D	34	J32 A	38
C13	36	F18	38	J33 B	38
F3	34	J1	37	L2	38
F4	34	J4 A	37	L3	38
F5	34	J5 B	37	R6	39
F6	34	J7	37	R7	39
F11 B	34	J17	37		

: JUNCTION BLOCK AND WIRE HARNESS CONNECTOR

Code	See Page	Junction Block and Wire Harness (Connector Location)
2F	31	Engine Room Main Wire and Instrument Panel J/B (Cowl Side Panel LH)
2H		
2J	31	Cowl Wire and Instrument Panel J/B (Cowl Side Panel LH)
2K		
2L	31	Floor Wire and Instrument Panel J/B (Cowl Side Panel LH)

: CONNECTOR JOINING WIRE HARNESS AND WIRE HARNESS

Code	See Page	Joining Wire Harness and Wire Harness (Connector Location)
IA1	42	Engine Room Main Wire and Cowl Wire (Cowl Side Panel LH)
ID2	42	Instrument Panel Wire and Cowl Wire (Left Kick Panel)

: GROUND POINTS

Code	See Page	Ground Points Location
IE	42	Cowl Side Panel LH
IG	42	Cowl Side Panel RH
BI	46	Left Side of Rear Pillar
BK	46	Back Panel Center

: SPLICE POINTS

Code	See Page	Wire Harness with Splice Points	Code	See Page	Wire Harness with Splice Points
E1	40	Engine Room Main Wire			

ILLUMINATION

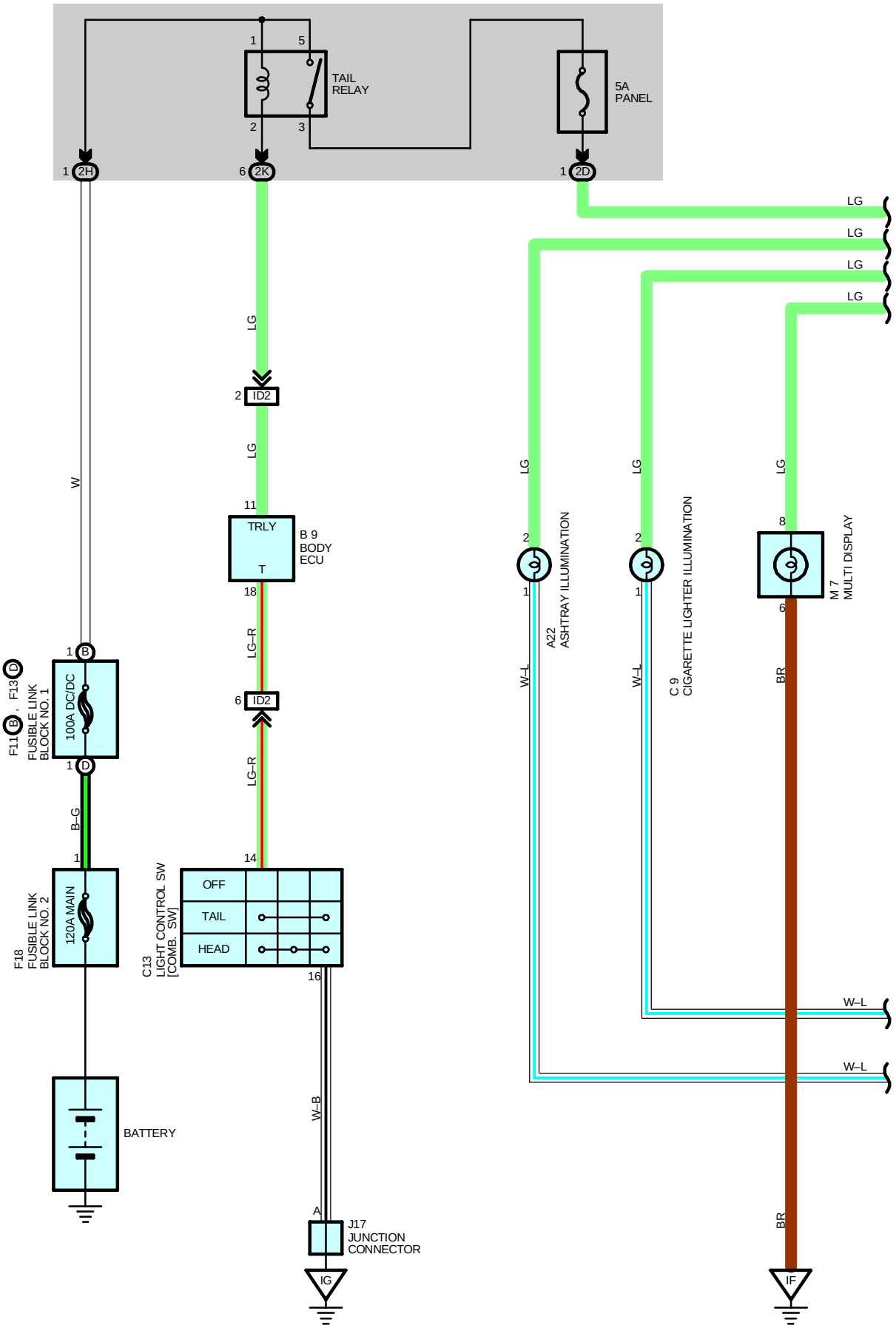

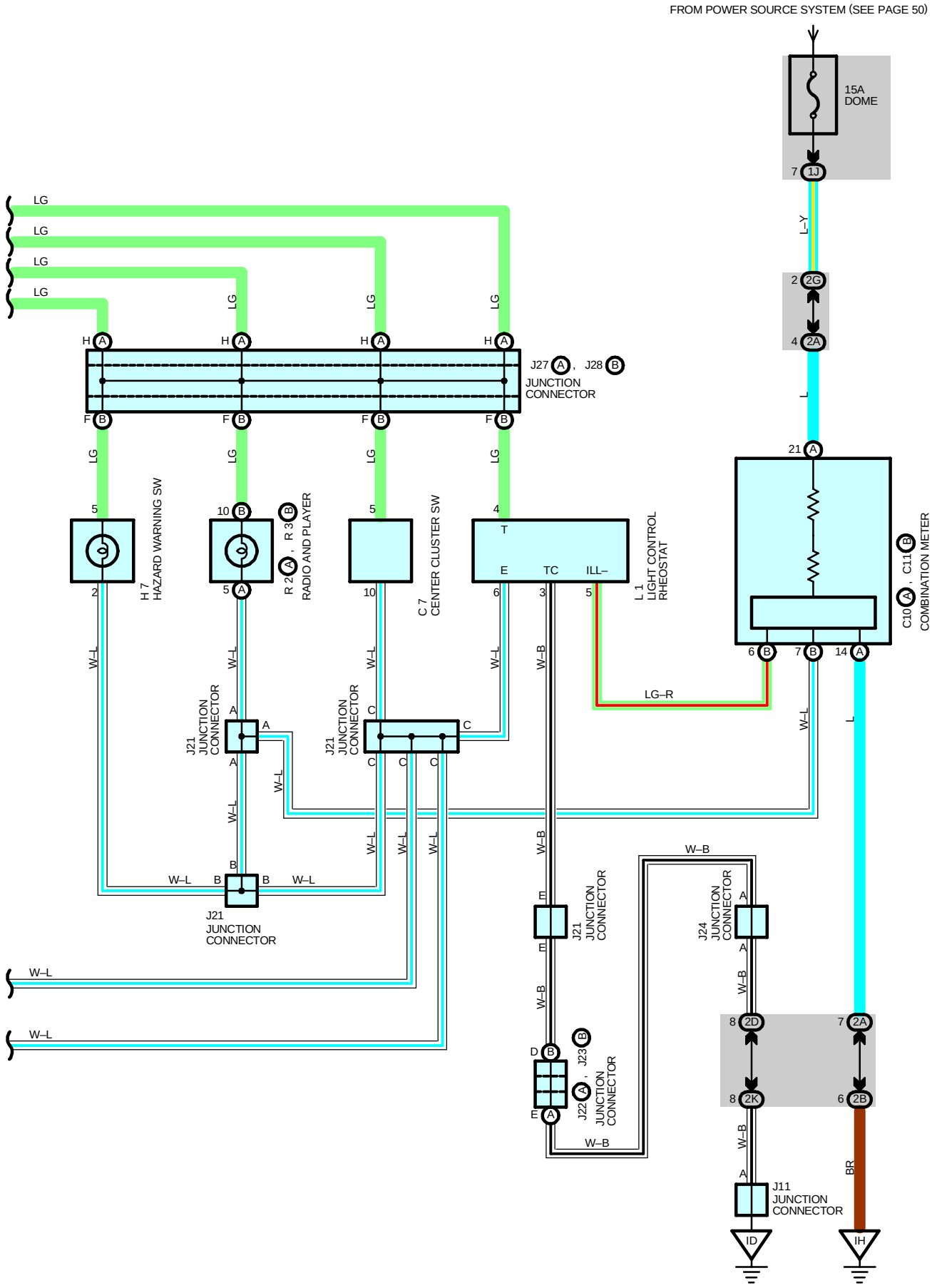
FROM POWER SOURCE SYSTEM (SEE PAGE 50)
15A
DOME
7 1J
L–Y
2 2G
4 2A
L
21 A
C10 A , C11 B
COMBINATION METER
6 B
7 B
14 A
LG–R
L 1
LIGHT CONTROL
RHEOSTAT
T
E
TC
ILL–
5
3
6
LG
H A
F B
J27 A , J28 B
JUNCTION
CONNECTOR
H 7
HAZARD WARNING SW
5
2
10 B
R 2 A , R 3 B
RADIO AND PLAYER
C 7
CENTER CLUSTER SW
10
4
W–L
W–B
J21
JUNCTION
CONNECTOR
J24
JUNCTION
CONNECTOR
J22 A , J23 B
8 2D
8 2K
7 2A
6 2B
BR
J11
JUNCTION
CONNECTOR
ID
IH

ILLUMINATION

SERVICE HINTS

TAIL RELAY

5–3 : Closed with the light control SW at **TAIL** or **HEAD** position

C13 COMBINATION SW

14–16 : Closed with the light control SW at **TAIL** or **HEAD** position

○ : PARTS LOCATION

Code	See Page	Code	See Page	Code	See Page
A22	36	F13 D	34	J24	37
B9	36	F18	38	J27 A	37
C7	36	H7	37	J28 B	37
C9	36	J11	37	L1	37
C10 A	36	J17	37	M7	37
C11 B	36	J21	37	R2 A	37
C13	36	J22 A	37	R3 B	37
F11 B	34	J23 B	37		

: JUNCTION BLOCK AND WIRE HARNESS CONNECTOR

Code	See Page	Junction Block and Wire Harness (Connector Location)
1J	27	Engine Room Main Wire and Engine Room J/B (Engine Compartment Left)
2A	30	Instrument Panel Wire and Instrument Panel J/B (Cowl Side Panel LH)
2B		
2D		
2G	31	Engine Room Main Wire and Instrument Panel J/B (Cowl Side Panel LH)
2H		
2K	31	Cowl Wire and Instrument Panel J/B (Cowl Side Panel LH)

: CONNECTOR JOINING WIRE HARNESS AND WIRE HARNESS

Code	See Page	Joining Wire Harness and Wire Harness (Connector Location)
ID2	42	Instrument Panel Wire and Cowl Wire (Left Kick Panel)

▽ : GROUND POINTS

Code	See Page	Ground Points Location
ID	42	Cowl Side Panel LH
IF	42	Left Kick Panel
IG	42	Cowl Side Panel RH
IH	42	Right Kick Panel

TURN SIGNAL AND HAZARD WARNING LIGHT

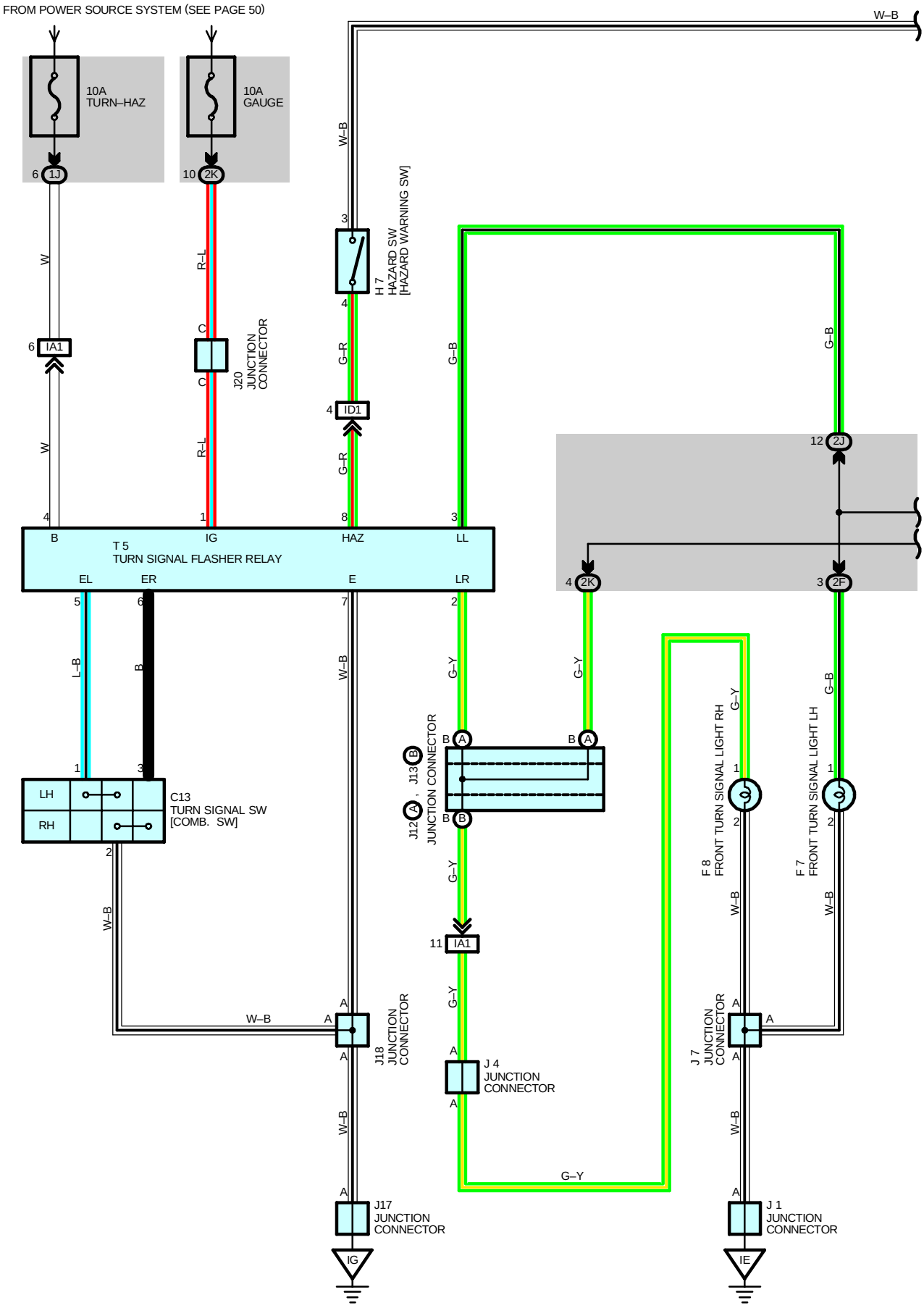

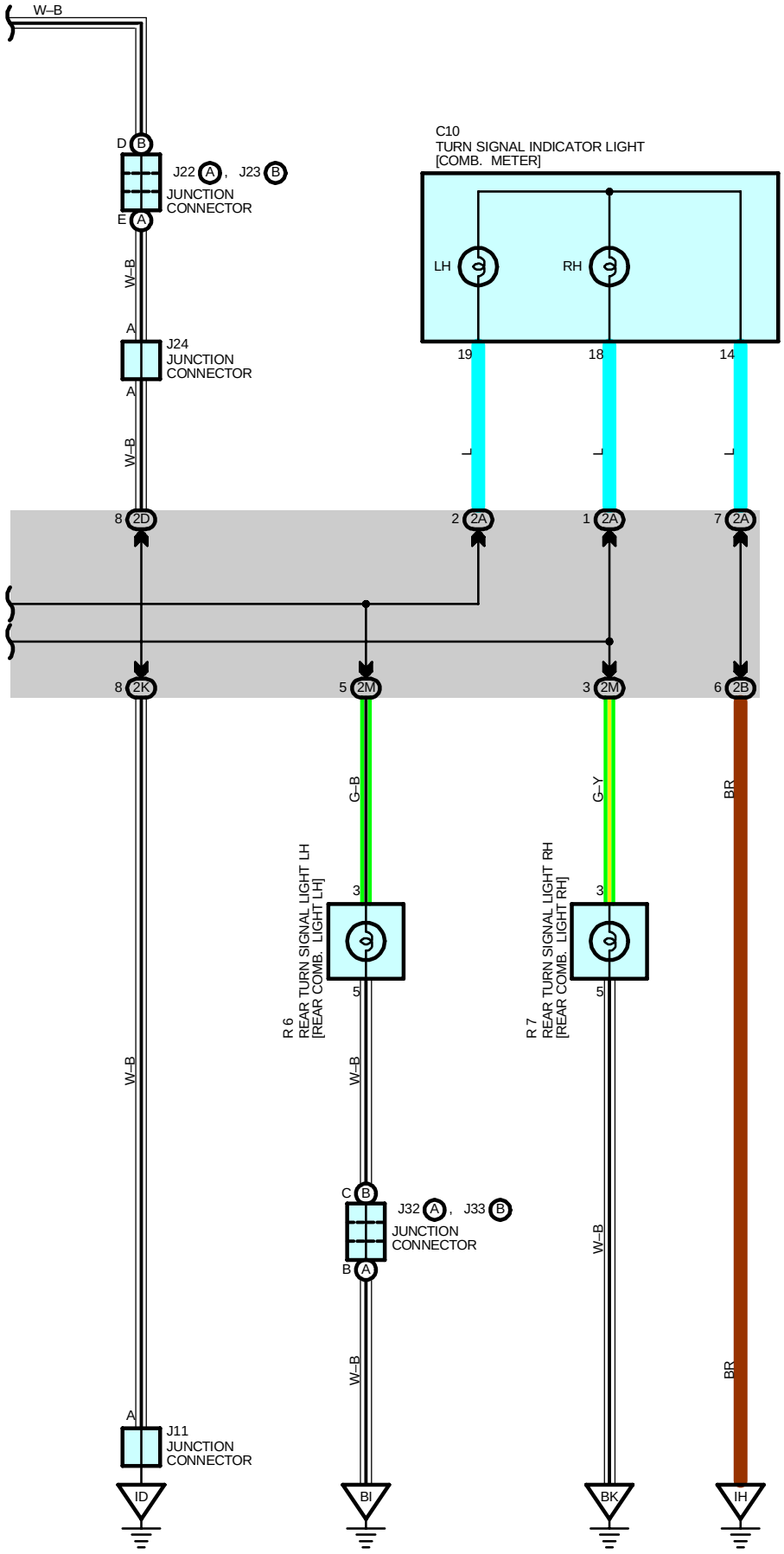
W–B
D B
J22 A , J23 B
JUNCTION CONNECTOR
E A
W–B
A
J24
JUNCTION CONNECTOR
A
W–B
C10
TURN SIGNAL INDICATOR LIGHT [COMB. METER]
LH
RH
19
18
14
L
L
L
8 2D
2 2A
1 2A
7 2A
8 2K
5 2M
3 2M
6 2B
G–B
G–Y
BR
R 6
REAR TURN SIGNAL LIGHT LH [REAR COMB. LIGHT LH]
R 7
REAR TURN SIGNAL LIGHT RH [REAR COMB. LIGHT RH]
3
5
W–B
C B
J32 A , J33 B
JUNCTION CONNECTOR
B A
W–B
W–B
BR
A
J11
JUNCTION CONNECTOR
ID
BI
BK
IH

TURN SIGNAL AND HAZARD WARNING LIGHT

SERVICE HINTS

T5 TURN SIGNAL FLASHER RELAY

1–GROUND : Approx. **12** volts with the ignition SW at **ON** position
4–GROUND : Always approx. **12** volts
2, 3–GROUND : Changes from approx. **12** to **0** volts with the ignition SW at **ON** position and the turn signal SW at **LEFT** or **RIGHT** position or the hazard SW at **ON** position
5–GROUND : Continuity with the ignition SW at **ON** position and the turn signal SW at **LEFT** position
6–GROUND : Continuity with the ignition SW at **ON** position and the turn signal SW at **RIGHT** position
8–GROUND : Continuity with the hazard SW at **ON** position
7–GROUND : Always continuity

○ : PARTS LOCATION

Code	See Page	Code	See Page	Code	See Page
C10	36	J11	37	J24	37
C13	36	J12 A	37	J32 A	38
F7	34	J13 B	37	J33 B	38
F8	34	J17	37	R6	39
H7	37	J18	37	R7	39
J1	37	J20	37	T5	37
J4	37	J22 A	37		
J7	37	J23 B	37		

: JUNCTION BLOCK AND WIRE HARNESS CONNECTOR

Code	See Page	Junction Block and Wire Harness (Connector Location)
1J	27	Engine Room Main Wire and Engine Room J/B (Engine Compartment Left)
2A	30	Instrument Panel Wire and Instrument Panel J/B (Cowl Side Panel LH)
2B		
2D		
2F	31	Engine Room Main Wire and Instrument Panel J/B (Cowl Side Panel LH)
2J	31	Cowl Wire and Instrument Panel J/B (Cowl Side Panel LH)
2K		
2M	31	Floor Wire and Instrument Panel J/B (Cowl Side Panel LH)

: CONNECTOR JOINING WIRE HARNESS AND WIRE HARNESS

Code	See Page	Joining Wire Harness and Wire Harness (Connector Location)
IA1	42	Engine Room Main Wire and Cowl Wire (Cowl Side Panel LH)
ID1	42	Instrument Panel Wire and Cowl Wire (Left Kick Panel)

▽ : GROUND POINTS

Code	See Page	Ground Points Location
ID	42	Cowl Side Panel LH
IE		
IG	42	Cowl Side Panel RH
IH	42	Right Kick Panel
BI	46	Left Side of Rear Pillar
BK	46	Back Panel Center

STOP LIGHT

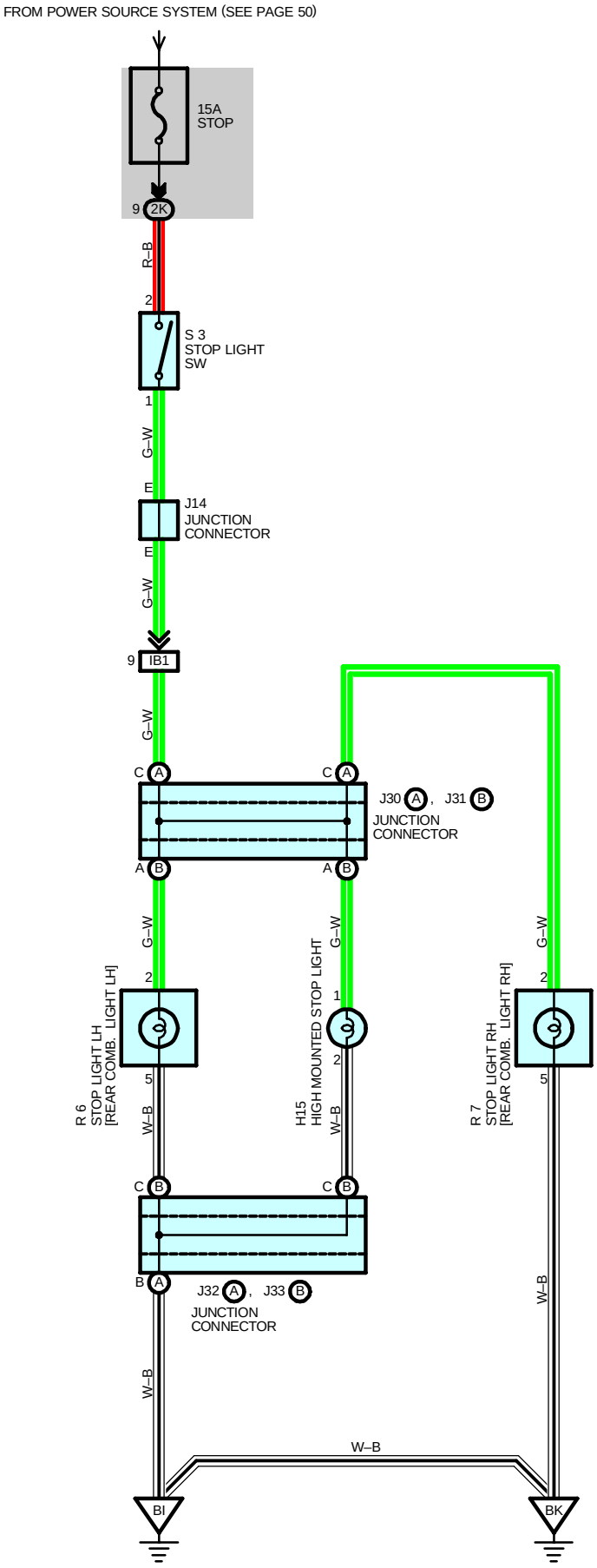
FROM POWER SOURCE SYSTEM (SEE PAGE 50)
15A
STOP
9 2K
R–B
2
S 3
STOP LIGHT
SW
1
G–W
E
J14
JUNCTION
CONNECTOR
E
G–W
9 IB1
G–W
C A
C A
J30 A , J31 B
JUNCTION
CONNECTOR
A B
A B
G–W
G–W
G–W
2
1
2
R 6
STOP LIGHT LH
[REAR COMB. LIGHT LH]
5
W–B
H15
HIGH MOUNTED STOP LIGHT
W–B
R 7
STOP LIGHT RH
[REAR COMB. LIGHT RH]
5
C B
C B
B A
J32 A , J33 B
JUNCTION
CONNECTOR
W–B
W–B
W–B
BI
BK

SERVICE HINTS

S3 STOP LIGHT SW

2–1 : Closed with the brake pedal depressed

: PARTS LOCATION

Code		See Page	Code		See Page	Code	See Page
H15		38	J31	B	38	R6	39
J14		37	J32	A	38	R7	39
J30	A	38	J33	B	38	S3	37

: JUNCTION BLOCK AND WIRE HARNESS CONNECTOR

Code	See Page	Junction Block and Wire Harness (Connector Location)
2K	31	Cowl Wire and Instrument Panel J/B (Cowl Side Panel LH)

: CONNECTOR JOINING WIRE HARNESS AND WIRE HARNESS

Code	See Page	Joining Wire Harness and Wire Harness (Connector Location)
IB1	42	Floor Wire and Cowl Wire (Cowl Side Panel LH)

: GROUND POINTS

Code	See Page	Ground Points Location
BI	46	Left Side of Rear Pillar
BK	46	Back Panel Center

BACK–UP LIGHT

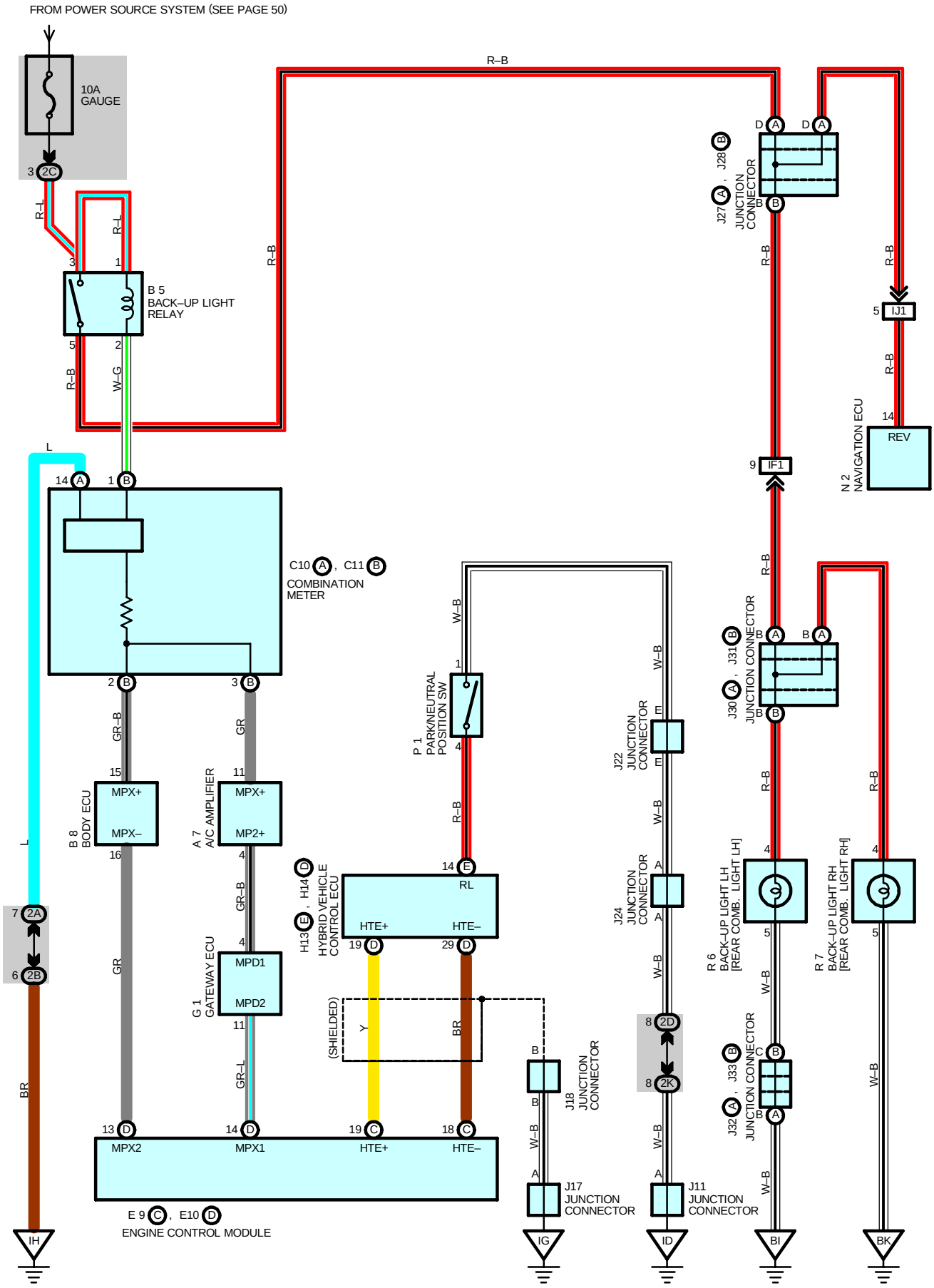

SERVICE HINTS

P1 PARK/NEUTRAL POSITION SW

4–1 : Closed with the shift lever at **R** position

B5 BACK–UP LIGHT RELAY

3–5 : Closed with the shift lever at **R** position

: PARTS LOCATION

Code	See Page	Code	See Page	Code	See Page
A7	36	H14 D	37	J31 B	38
B5	36	J11	37	J32 A	38
B8	36	J17	37	J33 B	38
C10 A	36	J18	37	N2	39
C11 B	36	J22	37	P1	37
E9 C	36	J24	37	R6	39
E10 D	36	J27 A	37	R7	39
G1	37	J28 B	37		
H13 E	37	J30 A	38		

: JUNCTION BLOCK AND WIRE HARNESS CONNECTOR

Code	See Page	Junction Block and Wire Harness (Connector Location)
2A	30	Instrument Panel Wire and Instrument Panel J/B (Cowl Side Panel LH)
2B		
2C		
2D		
2K	31	Cowl Wire and Instrument Panel J/B (Cowl Side Panel LH)

: CONNECTOR JOINING WIRE HARNESS AND WIRE HARNESS

Code	See Page	Joining Wire Harness and Wire Harness (Connector Location)
IF1	42	Instrument Panel Wire and Floor Wire (Left Kick Panel)
IJ1	44	Floor No.3 Wire and Instrument Panel Wire (Under the Instrument Panel Center)

: GROUND POINTS

Code	See Page	Ground Points Location
ID	42	Cowl Side Panel LH
IG	42	Cowl Side Panel RH
IH	42	Right Kick Panel
BI	46	Left Side of Rear Pillar
BK	46	Back Panel Center

LIGHT AUTO TURN OFF

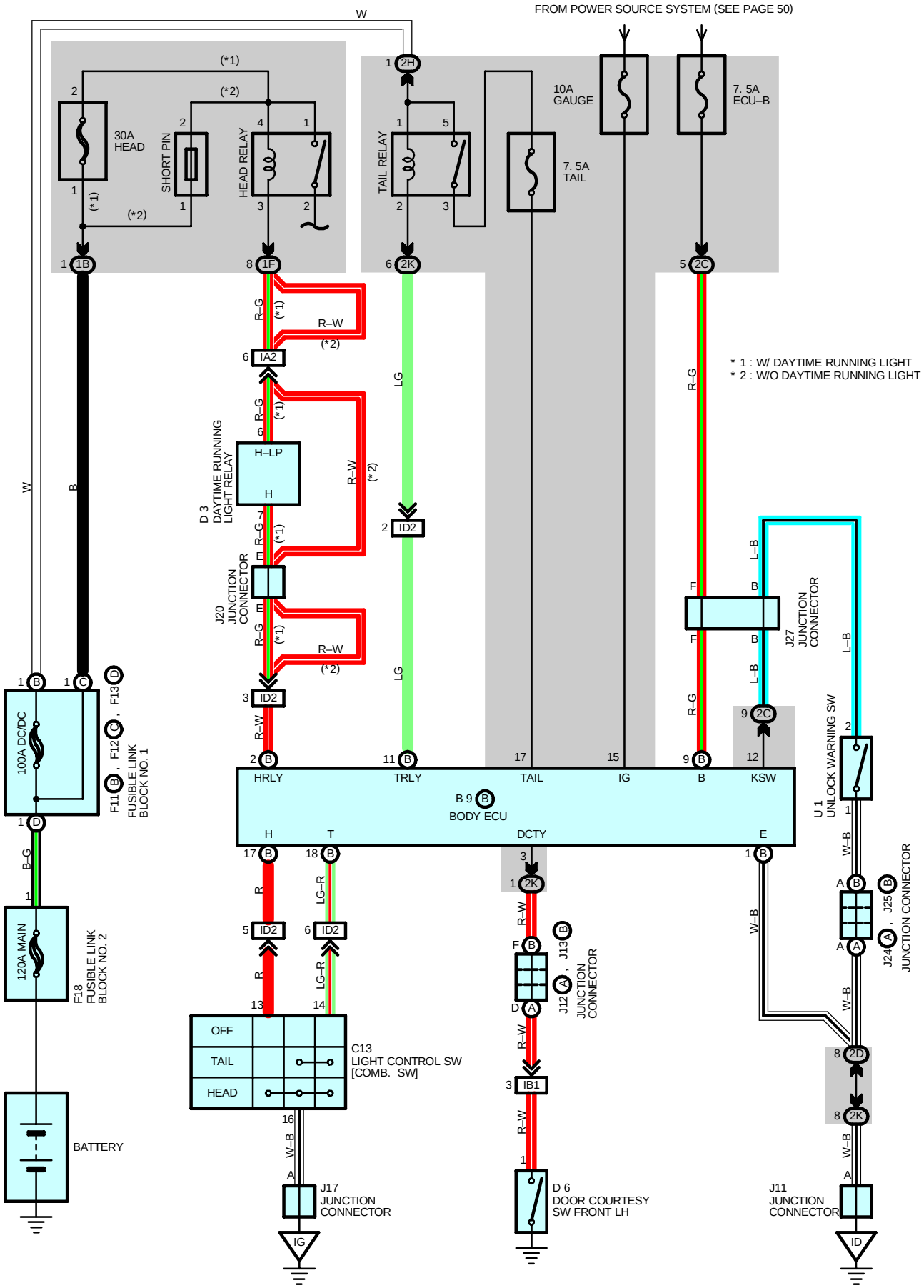

SYSTEM OUTLINE

With the ignition SW turned on, the current flows to TERMINAL 15 of the body ECU through GAUGE fuse.
Voltage is applied at all times to TERMINAL (A) 11 of the body ECU through the TAIL relay. Coil side, and to TERMINAL (A) 2 through the HEAD relay coil side (w/o daytime running light) or through the daytime running light relay (w/ daytime running light).

1. NORMAL LIGHTING OPERATION

<Turn taillight on>
With the light control SW turned to TAIL position, a signal is input into TERMINAL (A) 18 of the body ECU. Due to this signal, the current flowing to TERMINAL (A) 11 of the body ECU flows to TERMINAL (A) 18 to TERMINAL 14 of the light control SW to TERMINAL 16 to GROUND, and taillight relay causes taillights to turn on.

<Turn headlight on>
With the light control SW turned to HEAD position, a signal is input into TERMINALS (A) 17 and (A) 18 of the body ECU. Due to this signal, the current flowing to TERMINAL (A) 2 of the body ECU flows to TERMINAL (A) 17 to TERMINAL 13 of the light control SW to TERMINAL 16 to GROUND in the headlight circuit, and causes taillight and HEAD relay to turn the lights on. The taillight circuit is same as above.

2. LIGHT AUTO TURN OFF OPERATION

With light on and ignition SW turned off (Input signal goes to TERMINAL 15 of the body ECU), when the driver's door is opened (Input signal goes to TERMINAL 3 of the body ECU), the ECU operates and the current is cut off which flows from TERMINAL (A) 11 of the body ECU to TERMINAL (A) 18 in taillight circuit and from TERMINAL (A) 2 to TERMINAL (A) 17 in headlight circuit.
As a result, all lights are turned off automatically.

SERVICE HINTS

HEAD RELAY

2–1 : Closed with the light control SW at **HEAD** position or the dimmer SW at **FLASH** position
Closed with the engine running and the parking brake lever released (Parking brake SW off) [w/ daytime running light]

TAIL RELAY

3–5 : Closed with the light control SW at **TAIL** or **HEAD** position

D6 DOOR COURTESY SW LH

1–GROUND : Continuity with the front LH door open

B8 (A), B9 (B) BODY ECU

15–GROUND : Approx. **12** volts with the ignition SW at **ON** position
3–GROUND : Continuity with the front LH door open
(B) 9–GROUND : Always approx. **12** volts
(A) 1–GROUND : Always continuity
(A) 2–GROUND : Continuity with the light control SW at **HEAD** position
(A)11–GROUND : Continuity with the light control SW at **TAIL** or **HEAD** position

: PARTS LOCATION

Code	See Page	Code	See Page	Code	See Page
B9 B	36	F13 D	34	J20	37
C13	36	F18	38	J24 A	37
D3	36	J11	37	J25 B	37
D6	38	J12 A	37	J27	37
F11 B	34	J13 B	37	U1	37
F12 C	34	J17	37		

: JUNCTION BLOCK AND WIRE HARNESS CONNECTOR

Code	See Page	Junction Block and Wire Harness (Connector Location)
1B	27	Engine Room Main Wire and Engine Room J/B (Engine Compartment Left)
1F		
2C	30	Instrument Panel Wire and Instrument Panel J/B (Cowl Side Panel LH)
2D		
2H	31	Engine Room Main Wire and Instrument Panel J/B (Cowl Side Panel LH)
2K	31	Cowl Wire and Instrument Panel J/B (Cowl Side Panel LH)

LIGHT AUTO TURN OFF

: CONNECTOR JOINING WIRE HARNESS AND WIRE HARNESS

Code	See Page	Joining Wire Harness and Wire Harness (Connector Location)
IA2	42	Engine Room Main Wire and Cowl Wire (Cowl Side Panel LH)
IB1	42	Floor Wire and Cowl Wire (Cowl Side Panel LH)
ID2	42	Instrument Panel Wire and Cowl Wire (Left Kick Panel)

: GROUND POINTS

Code	See Page	Ground Points Location
ID	42	Cowl Side Panel LH
IG	42	Cowl Side Panel RH

INTERIOR LIGHT

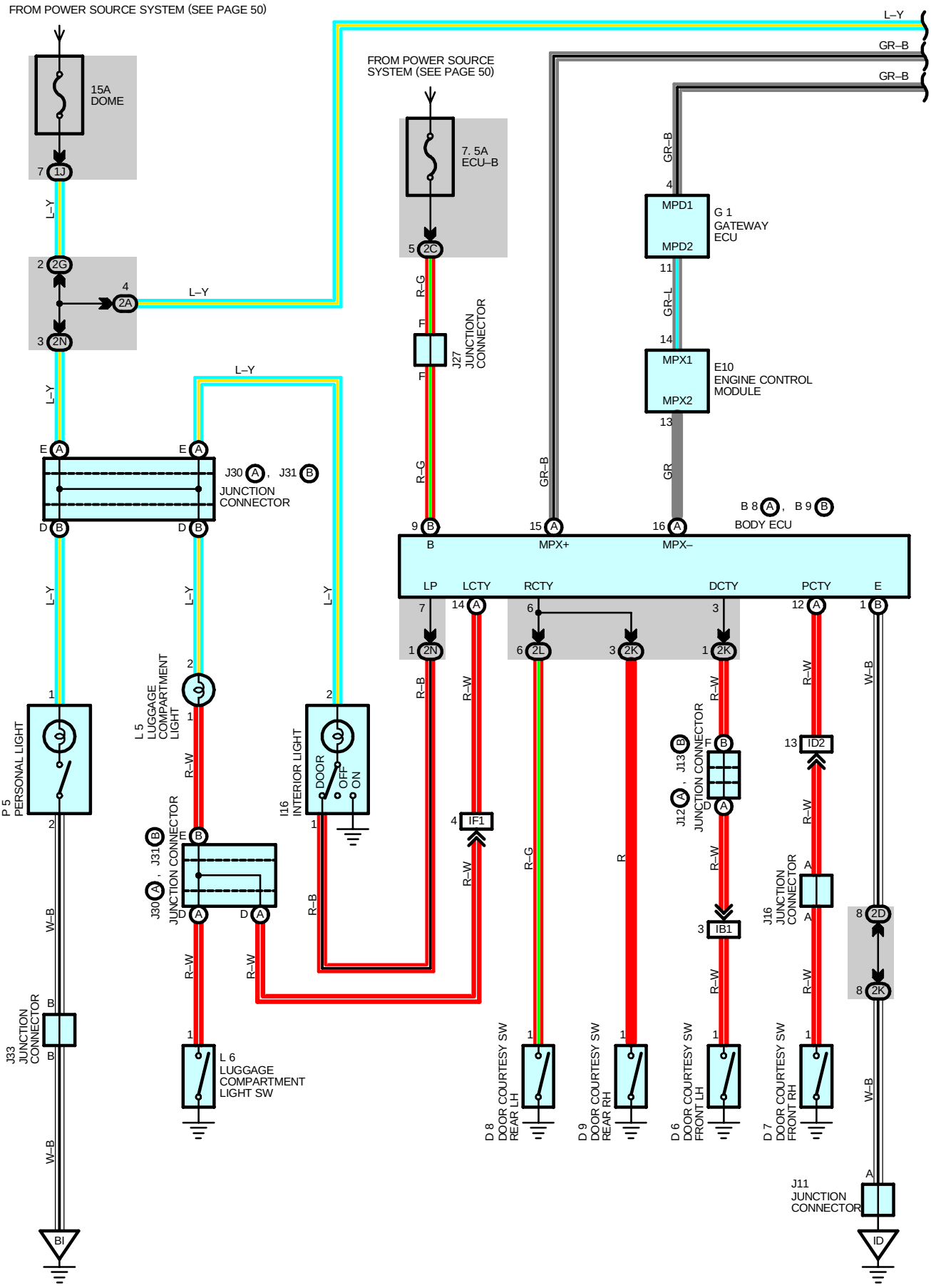

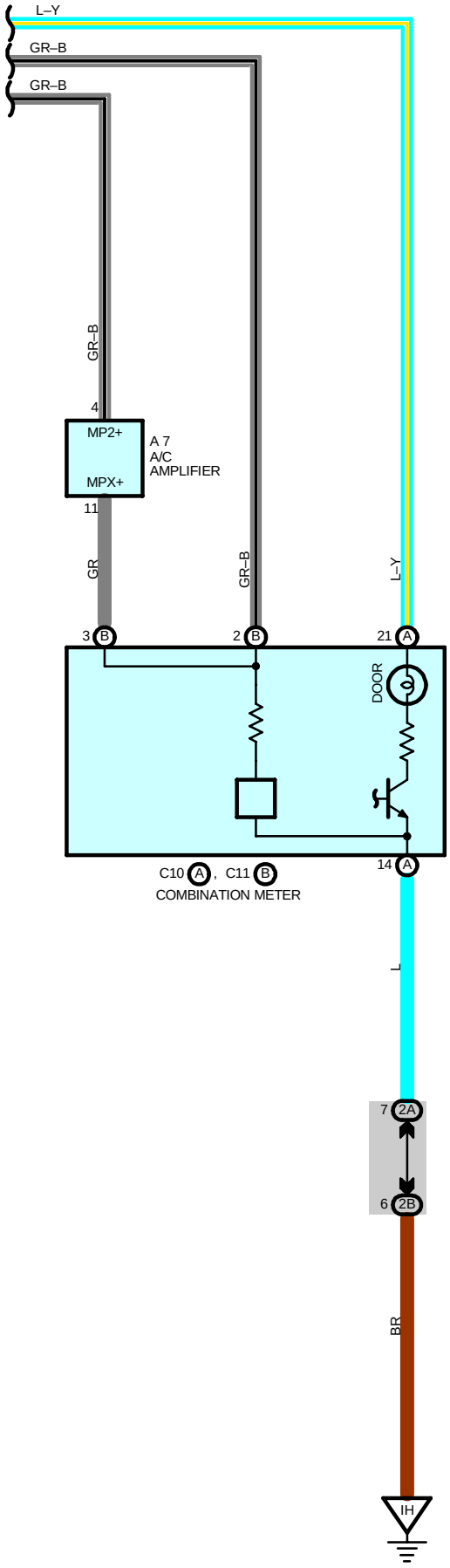
L–Y
GR–B
GR–B
GR–B
4
MP2+
MPX+
A 7
A/C
AMPLIFIER
11
GR
GR–B
L–Y
3 B
2 B
21 A
DOOR
14 A
C10 A , C11 B
COMBINATION METER
L
7 2A
6 2B
BR
IH

INTERIOR LIGHT

SERVICE HINTS

B8 (A), B9 (B) BODY ECU

3–GROUND : Continuity with front LH door open
6–GROUND : Continuity with rear LH, RH door open
(A)14–GROUND : Continuity with front RH door open
(B) 9–GROUND : Always approx. **12** volts

L6 LUGGAGE COMPARTMENT LIGHT SW

1–GROUND : Closed with the luggage compartment door open

○ : PARTS LOCATION

Code	See Page	Code	See Page	Code	See Page
A7	36	D9	38	J27	37
B8 A	36	E10	36	J30 A	38
B9 B	36	G1	37	J31 B	38
C10 A	36	I16	38	J33	38
C11 B	36	J11	37	L5	38
D6	38	J12 A	37	L6	38
D7	38	J13 B	37	P5	39
D8	38	J16	37		

⬭ : JUNCTION BLOCK AND WIRE HARNESS CONNECTOR

Code	See Page	Junction Block and Wire Harness (Connector Location)
1J	27	Engine Room Main Wire and Engine Room J/B (Engine Compartment Left)
2A	30	Instrument Panel Wire and Instrument Panel J/B (Cowl Side Panel LH)
2B		
2C		
2D		
2G	31	Engine Room Main Wire and Instrument Panel J/B (Cowl Side Panel LH)
2K	31	Cowl Wire and Instrument Panel J/B (Cowl Side Panel LH)
2L	31	Floor Wire and Instrument Panel J/B (Cowl Side Panel LH)
2N		

▭ : CONNECTOR JOINING WIRE HARNESS AND WIRE HARNESS

Code	See Page	Joining Wire Harness and Wire Harness (Connector Location)
IB1	42	Floor Wire and Cowl Wire (Cowl Side Panel LH)
ID2	42	Instrument Panel Wire and Cowl Wire (Left Kick Panel)
IF1	42	Instrument Panel Wire and Floor Wire (Left Kick Panel)

▽ : GROUND POINTS

Code	See Page	Ground Points Location
ID	42	Cowl Side Panel LH
IH	42	Right Kick Panel
BI	46	Left Side of Rear Pillar

MULTIPLEX COMMUNICATION SYSTEM (COMMUNICATION BUS)

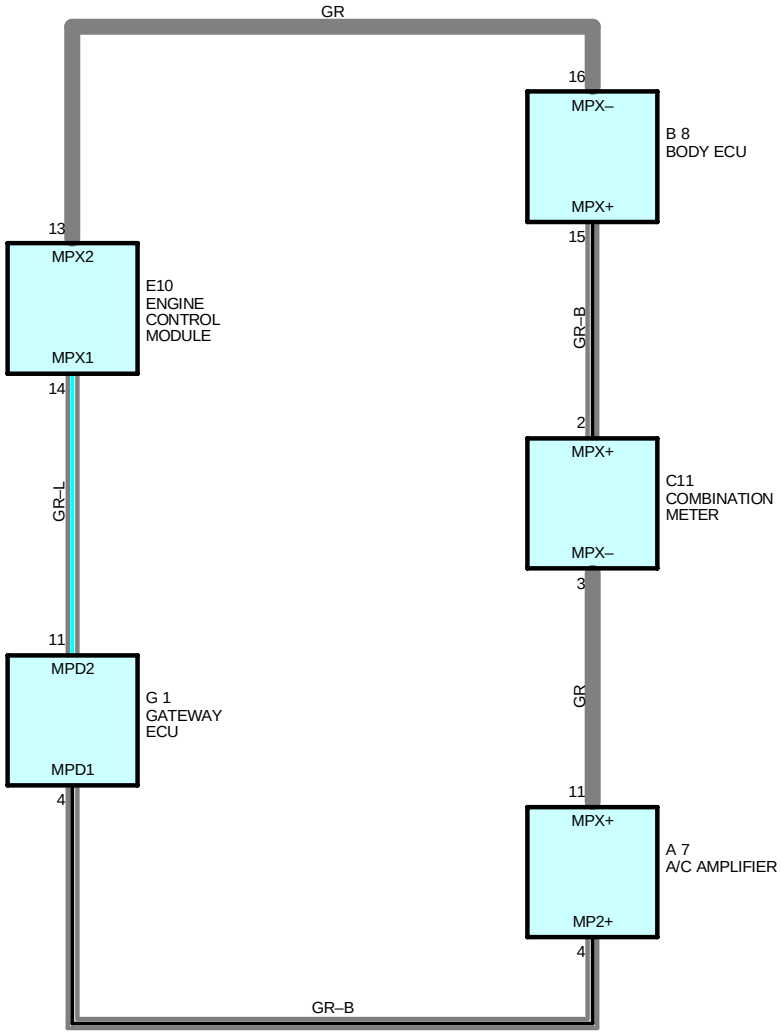

KEY REMINDER AND LIGHT REMINDER BUZZER

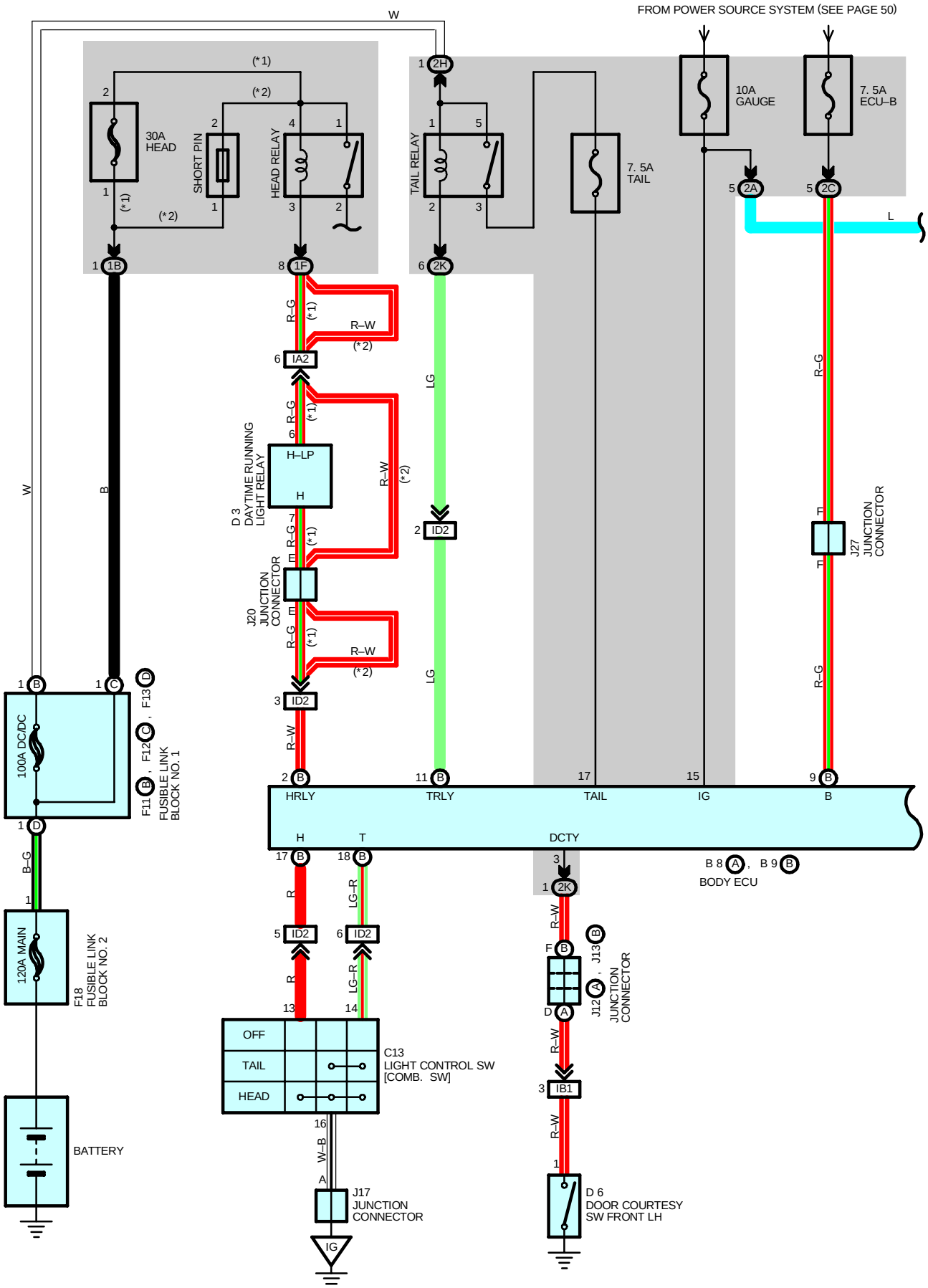

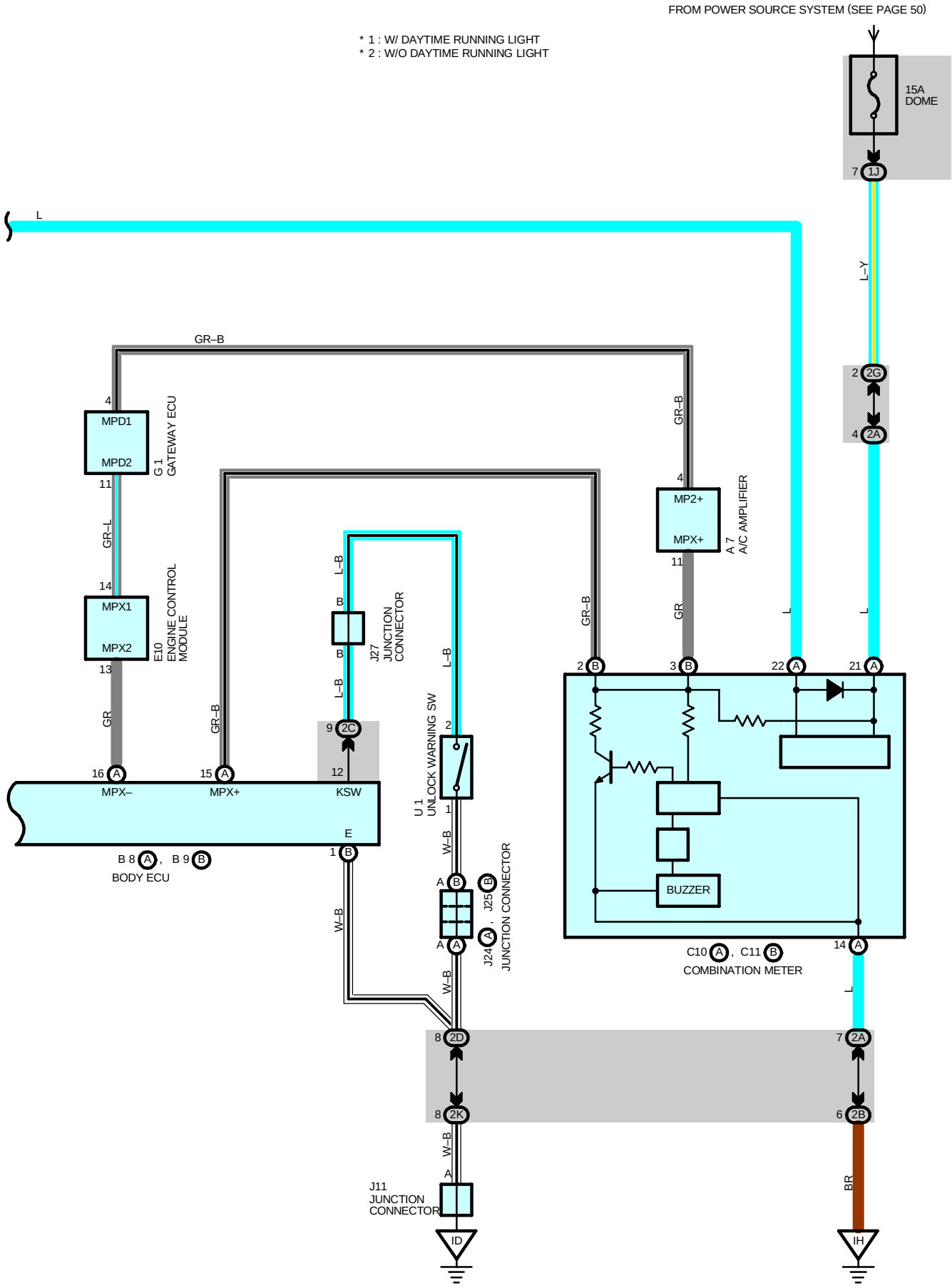
FROM POWER SOURCE SYSTEM (SEE PAGE 50)
* 1 : W/ DAYTIME RUNNING LIGHT
* 2 : W/O DAYTIME RUNNING LIGHT
15A
DOME
7 1J
L
L–Y
GR–B
2 2G
4 2A
4
MPD1
MPD2
11
G 1
GATEWAY ECU
GR–L
14
MPX1
MPX2
13
E10
ENGINE CONTROL
MODULE
GR
16 A
MPX–
15 A
MPX+
12
KSW
E
1 B
B 8 A , B 9 B
BODY ECU
GR–B
L–B
B
B
J27
JUNCTION
CONNECTOR
L–B
9 2C
U 1
UNLOCK WARNING SW
2
1
W–B
A B
A A
J25 , J24
JUNCTION CONNECTOR
W–B
W–B
8 2D
8 2K
W–B
A
J11
JUNCTION
CONNECTOR
ID
GR–B
4
MP2+
MPX+
11
A 7
A/C AMPLIFIER
GR
2 B
3 B
22 A
21 A
BUZZER
C10 A , C11 B
COMBINATION METER
14 A
L
7 2A
6 2B
BR
IH

KEY REMINDER AND LIGHT REMINDER BUZZER

SYSTEM OUTLINE

The current always flows from GAUGE fuse to body ECU TERMINAL 15.

1. LIGHT REMINDER BUZZER SYSTEM

If you open the door of the driver's side when either headlight or taillight is on with ignition SW being off, the buzzer comes on.

2. KEY REMINDER BUZZER SYSTEM

If you open the door of the driver's side when the ignition key is inserted in ignition SW being off, the buzzer comes on.

SERVICE HINTS

B8 (A), B9 (B) BODY ECU

(B) 9–GROUND : Always approx. **12** volts
(A) 1–GROUND : Always continuity
12–GROUND : Continuity with the ignition key in cylinder

D6 DOOR COURTESY SW FRONT LH

1–GROUND : Closed with the driver's door open

C10 (A) COMBINATION METER

(A)22–GROUND : Approx. **12** volts with the ignition SW at **ON** position
(A)21–GROUND : Always approx. **12** volts
(A)14–GROUND : Always continuity

○ : PARTS LOCATION

Code	See Page	Code	See Page	Code	See Page
A7	36	E10	36	J13 B	37
B8 A	36	F11 B	34	J17	37
B9 B	36	F12 C	34	J20	37
C10 A	36	F13 D	34	J24 A	37
C11 B	36	F18	38	J25 B	37
C13	36	G1	37	J27	37
D3	36	J11	37	U1	37
D6	38	J12 A	37		

⬭ : JUNCTION BLOCK AND WIRE HARNESS CONNECTOR

Code	See Page	Junction Block and Wire Harness (Connector Location)
1B	27	Engine Room Main Wire and Engine Room J/B (Engine Compartment Left)
1F		
1J		
2A	30	Instrument Panel Wire and Instrument Panel J/B (Cowl Side Panel LH)
2B		
2C		
2D		
2G	31	Engine Room Main Wire and Instrument Panel J/B (Cowl Side Panel LH)
2H		
2K	31	Cowl Wire and Instrument Panel J/B (Cowl Side Panel LH)

▭ : CONNECTOR JOINING WIRE HARNESS AND WIRE HARNESS

Code	See Page	Joining Wire Harness and Wire Harness (Connector Location)
IA2	42	Engine Room Main Wire and Cowl Wire (Cowl Side Panel LH)
IB1	42	Floor Wire and Cowl Wire (Cowl Side Panel LH)
ID2	42	Instrument Panel Wire and Cowl Wire (Left Kick Panel)

▽ **: GROUND POINTS**

Code	See Page	Ground Points Location
ID	42	Cowl Side Panel LH
IG	42	Cowl Side Panel RH
IH	42	Right Kick Panel

SEAT BELT WARNING

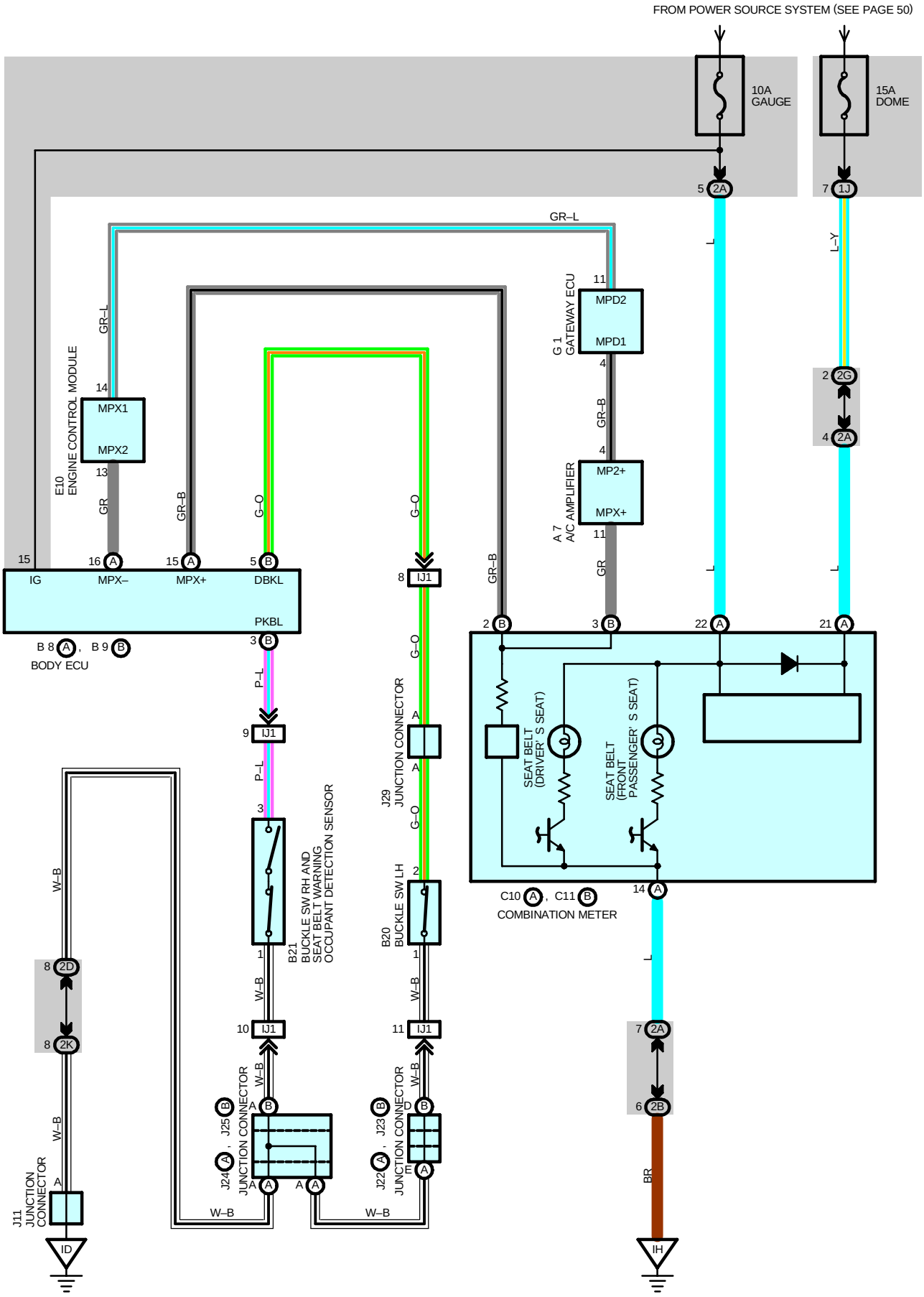

SYSTEM OUTLINE

When the driver has not fastened the seat belt while the ignition SW is ON, the driver seat belt warning light blinks, and a warning buzzer comes on.
Also, in the front passenger seat, a sensor recognizes a passenger, and when the passenger has not fastened the seat belt, the front passenger seat belt warning light blinks.

SERVICE HINTS

B20 BUCKLE SW LH

1–2 : Closed with driver's seat belt in use

: PARTS LOCATION

Code	See Page	Code	See Page	Code	See Page
A7	36	C10 A	36	J22 A	37
B8 A	36	C11 B	36	J23 B	37
B9 B	36	E10	36	J24 A	37
B20	38	G1	37	J25 B	37
B21	38	J11	37	J29	37

: JUNCTION BLOCK AND WIRE HARNESS CONNECTOR

Code	See Page	Junction Block and Wire Harness (Connector Location)
1J	27	Engine Room Main Wire and Engine Room J/B (Engine Compartment Left)
2A	30	Instrument Panel Wire and Instrument Panel J/B (Cowl Side Panel LH)
2B		
2D		
2G	31	Engine Room Main Wire and Instrument Panel J/B (Cowl Side Panel LH)
2K	31	Cowl Wire and Instrument Panel J/B (Cowl Side Panel LH)

: CONNECTOR JOINING WIRE HARNESS AND WIRE HARNESS

Code	See Page	Joining Wire Harness and Wire Harness (Connector Location)
IJ1	44	Floor No.3 Wire and Instrument Panel Wire (Under the Instrument Panel Center)

: GROUND POINTS

Code	See Page	Ground Points Location
ID	42	Cowl Side Panel LH
IH	42	Right Kick Panel

WIPER AND WASHER

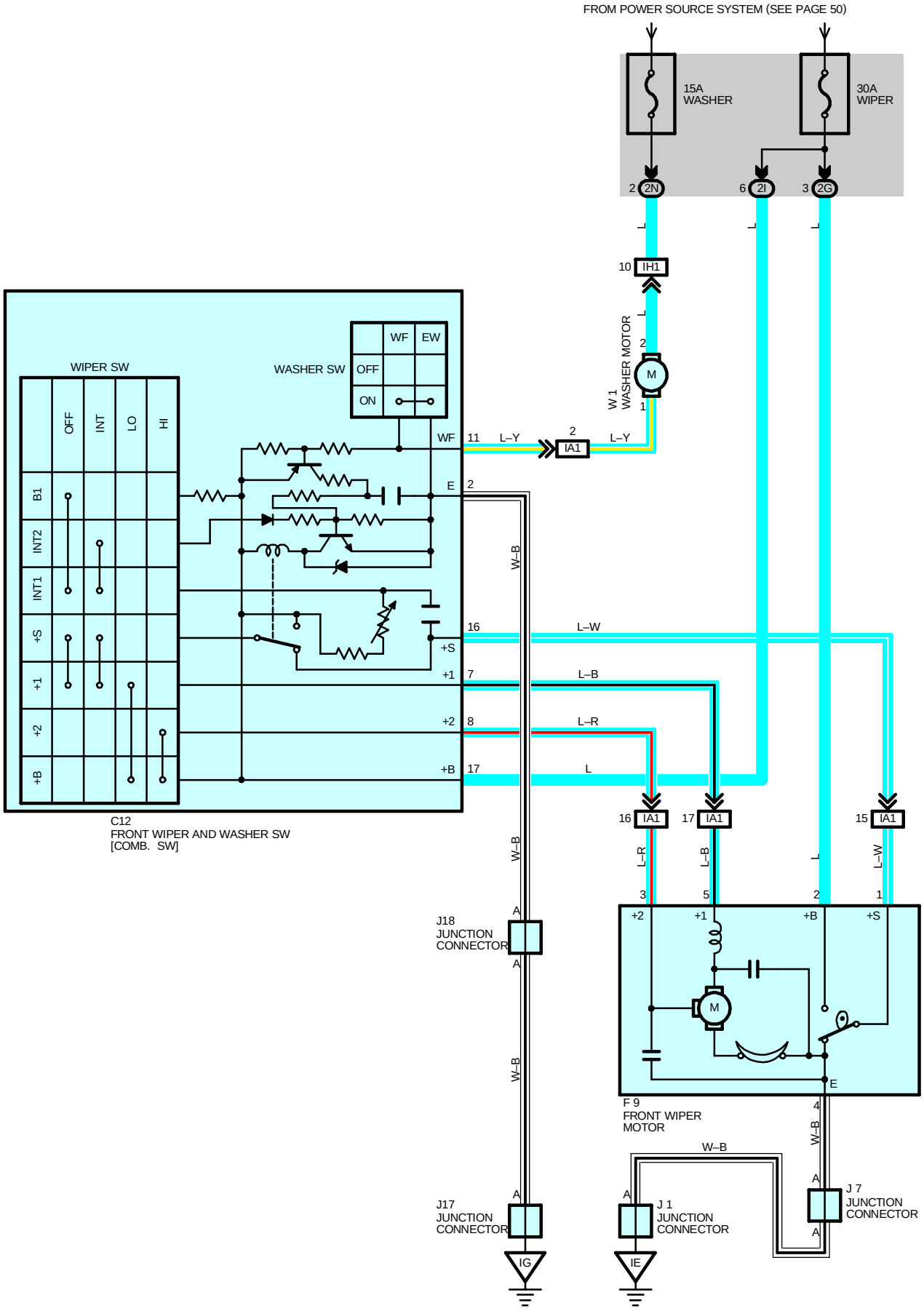

SYSTEM OUTLINE

When the ignition SW is turned ON, the current flows from WIPER fuse to wiper and washer SW TERMINAL 17 and front wiper motor TERMINAL 2 or the current flows from WASHER fuse to washer motor TERMINAL 2.

1. LO POSITION

When the wiper and washer SW is at LO position, the current flows from wiper and washer SW TERMINAL 17 to TERMINAL 7 to front wiper motor TERMINAL 5 to TERMINAL 4 to GROUND, and the front wiper motor runs at low speed.

2. HI POSITION

When the wiper and washer SW is at HI position, the current flows from wiper and washer SW TERMINAL 17 to TERMINAL 8 to front wiper motor TERMINAL 3 to TERMINAL 4 to GROUND, and the front wiper motor runs at high speed.

3. INT POSITION

When the wiper and washer SW is at INT position, the wiper relay is activated and the current flows from wiper and washer SW TERMINAL 17 to TERMINAL 2 to GROUND. This current activates the intermittent circuit, and the current flows from wiper and washer SW TERMINAL 17 to TERMINAL 7 to front wiper motor TERMINAL 5 to TERMINAL 4 to GROUND, and operates the front wipers.

4. WASHER CONTINUOUS OPERATION

When the wiper and washer SW is pulled to WASHER position (Washer SW ON position), the current from the WASHER fuse flows to washer motor TERMINAL 2 to TERMINAL 1 to wiper and washer SW TERMINAL 11 to TERMINAL 2 to GROUND, and operates the washer motor to emit a water spray. At the same time, the current flows from the WIP fuse to wiper and washer SW TERMINAL 17 to TERMINAL 7 to front wiper motor TERMINAL 5 to TERMINAL 4 to GROUND, and operates the front wiper motor.

SERVICE HINTS

C12 FRONT WIPER AND WASHER SW

2–GROUND : Always continuity
7–GROUND : Approx. **12** volts with the front wiper and washer SW at **LO** position
Approx. **2** to **12** seconds intermittently with the front wiper and washer SW at **INT** position
8–GROUND : Approx. **12** volts with the front wiper and washer SW at **HI** position
16–GROUND : Approx. **12** volts with the ignition SW on unless the front wiper motor at **STOP** position
17–GROUND : Approx. **12** volts the ignition SW at **ON** or **ST** position

F9 FRONT WIPER MOTOR

2–1 : Closed unless the wiper motor at **STOP** position

: PARTS LOCATION

Code	See Page	Code	See Page	Code	See Page
C12	36	J7	37	W1	35
F9	34	J17	37		
J1	37	J18	37		

: JUNCTION BLOCK AND WIRE HARNESS CONNECTOR

Code	See Page	Junction Block and Wire Harness (Connector Location)
2G	31	Engine Room Main Wire and Instrument Panel J/B (Cowl Side Panel LH)
2I	31	Cowl Wire and Instrument Panel J/B (Cowl Side Panel LH)
2N	31	Floor Wire and Instrument Panel J/B (Cowl Side Panel LH)

: CONNECTOR JOINING WIRE HARNESS AND WIRE HARNESS

Code	See Page	Joining Wire Harness and Wire Harness (Connector Location)
IA1	42	Engine Room Main Wire and Cowl Wire (Cowl Side Panel LH)
IH1	42	Floor Wire and Engine Room Main Wire (Left Kick Panel)

: GROUND POINTS

Code	See Page	Ground Points Location
IE	42	Cowl Side Panel LH
IG	42	Cowl Side Panel RH

CIGARETTE LIGHTER

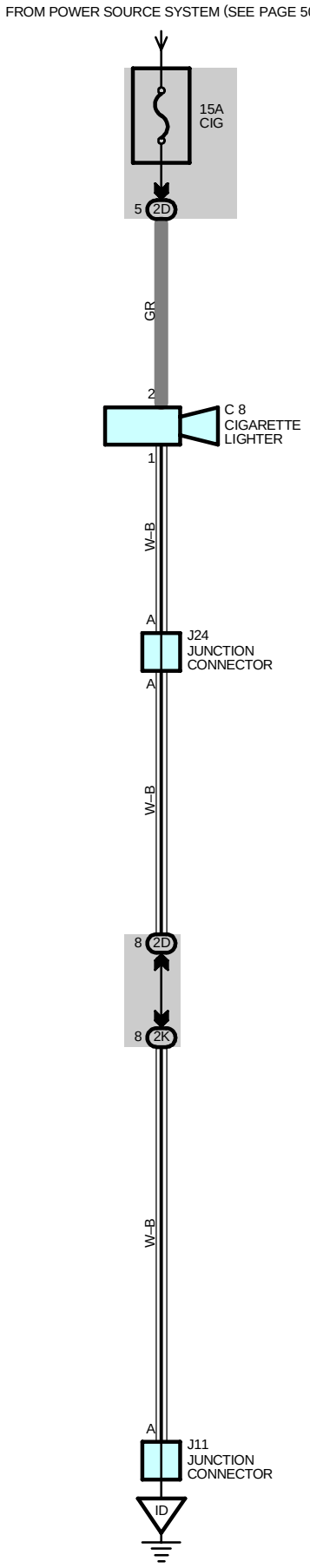

SERVICE HINTS

C8 CIGARETTE LIGHTER

2–GROUND : Approx. **12** volts with the ignition SW at **ACC** or **ON** position

1–GROUND : Always continuity

: PARTS LOCATION

Code	See Page	Code	See Page	Code	See Page
C8	36	J11	37	J24	37

: JUNCTION BLOCK AND WIRE HARNESS CONNECTOR

Code	See Page	Junction Block and Wire Harness (Connector Location)
2D	30	Instrument Panel Wire and Instrument Panel J/B (Cowl Side Panel LH)
2K	31	Cowl Wire and Instrument Panel J/B (Cowl Side Panel LH)

: GROUND POINTS

Code	See Page	Ground Points Location
ID	42	Cowl Side Panel LH

HORN

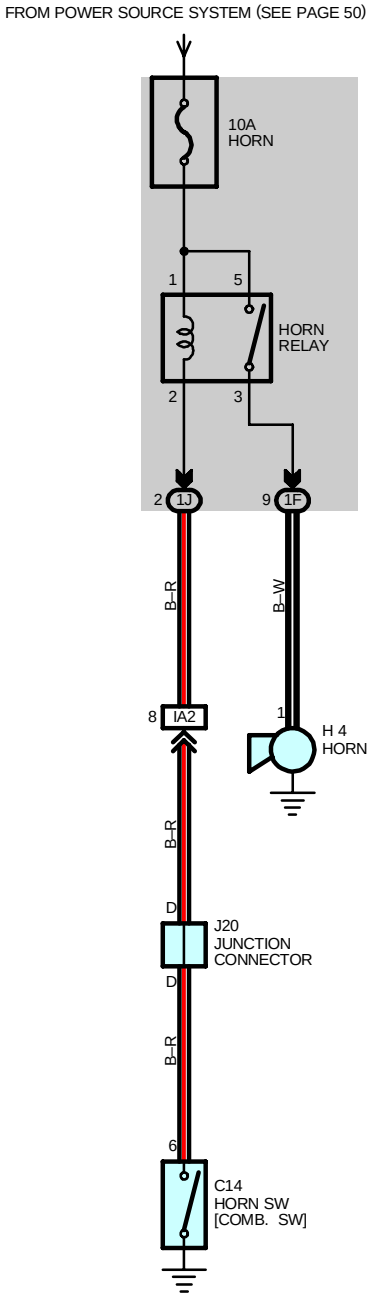
FROM POWER SOURCE SYSTEM (SEE PAGE 50)
10A
HORN
1
5
HORN
RELAY
2
3
2
1J
9
1F
B–R
B–W
8
IA2
1
H 4
HORN
B–R
D
J20
JUNCTION
CONNECTOR
D
B–R
6
C14
HORN SW
[COMB. SW]

SERVICE HINTS

HORN RELAY

5–3 : Closed with the horn SW on

: PARTS LOCATION

Code	See Page	Code	See Page	Code	See Page
C14	36	H4	34	J20	37

: JUNCTION BLOCK AND WIRE HARNESS CONNECTOR

Code	See Page	Junction Block and Wire Harness (Connector Location)
1F	27	Engine Room Main Wire and Engine Room J/B (Engine Compartment Left)
1J		

: CONNECTOR JOINING WIRE HARNESS AND WIRE HARNESS

Code	See Page	Joining Wire Harness and Wire Harness (Connector Location)
IA2	42	Engine Room Main Wire and Cowl Wire (Cowl Side Panel LH)

POWER WINDOW

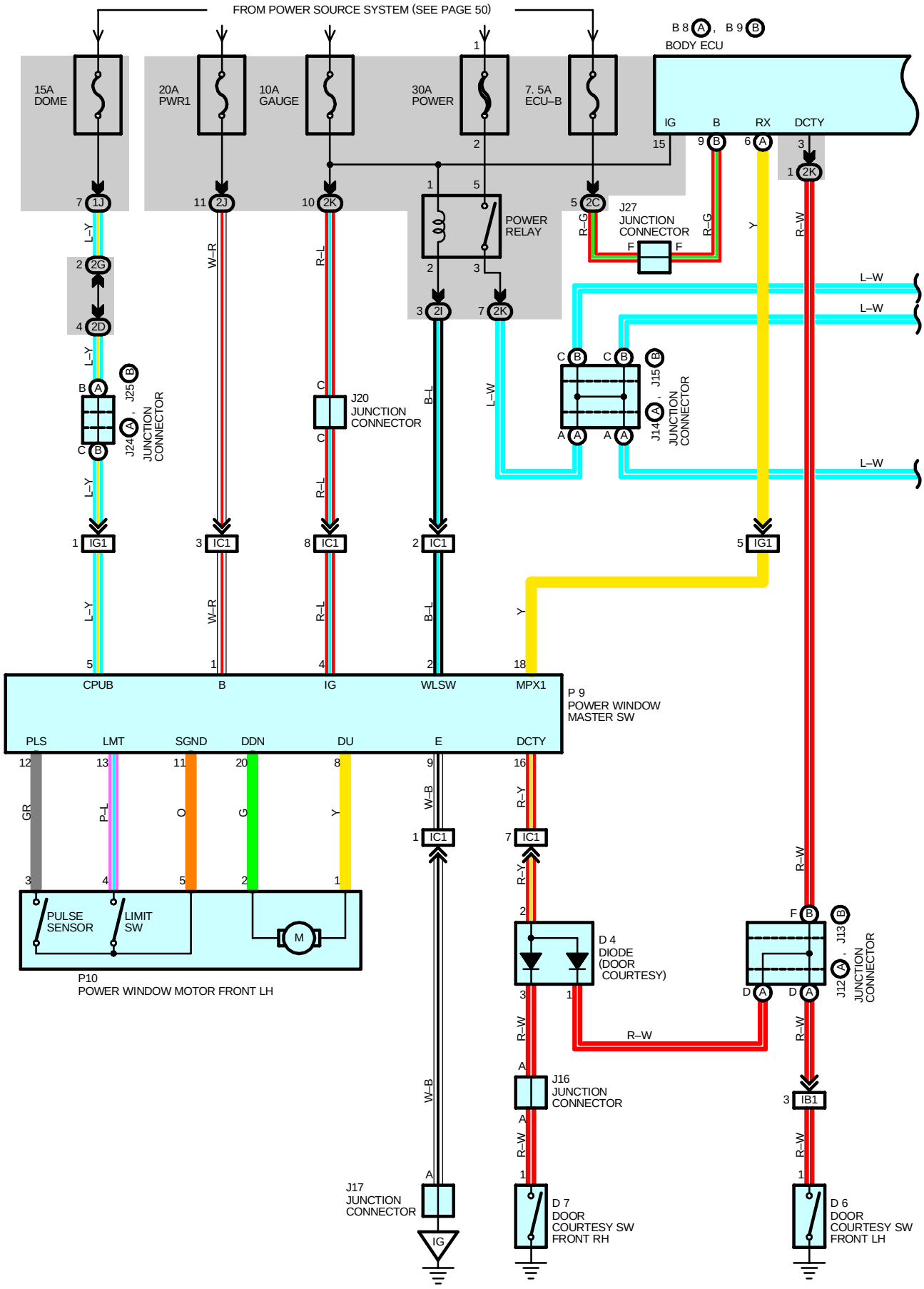

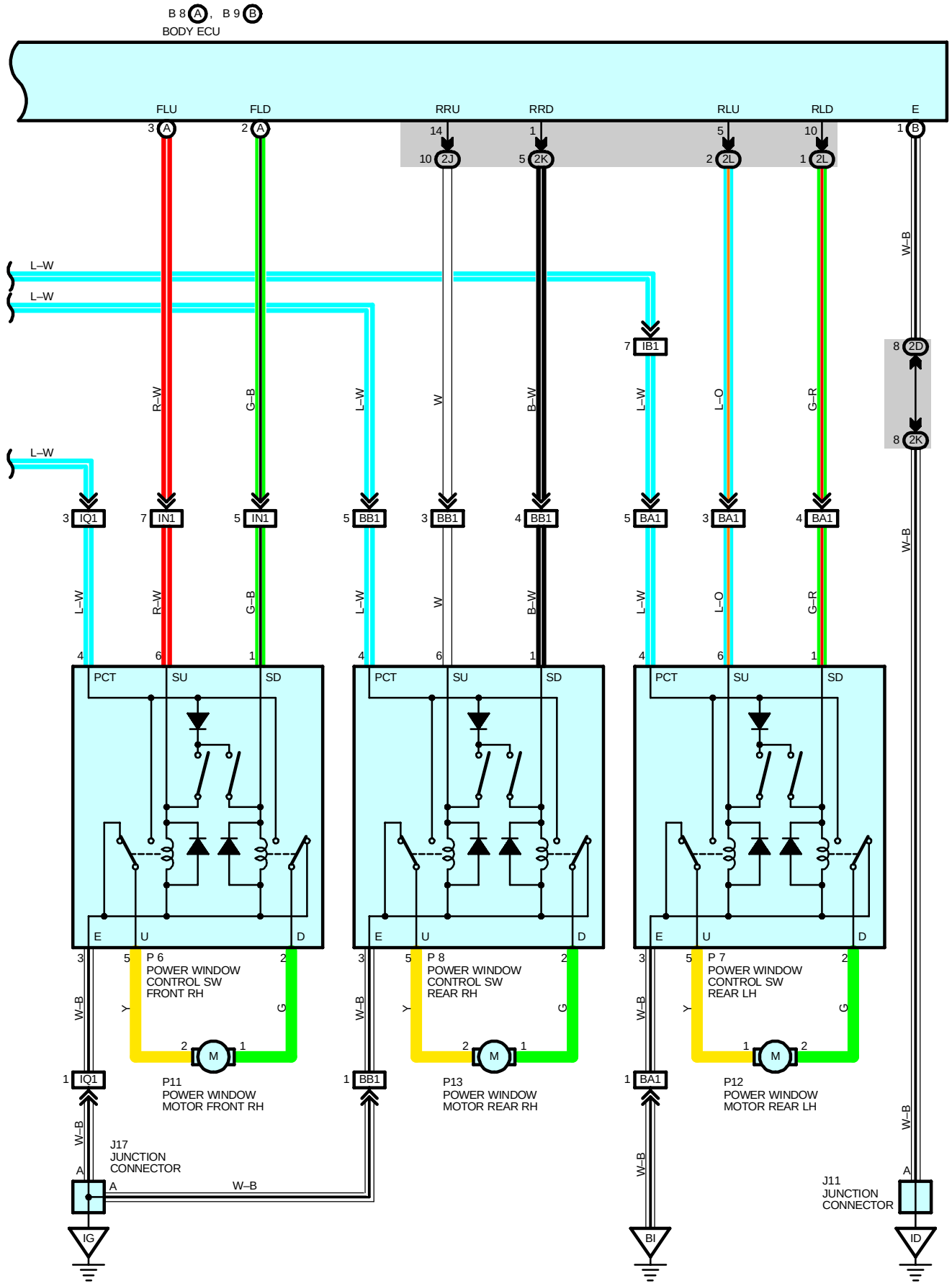
B 8 A , B 9 B
BODY ECU
FLU
FLD
RRU
RRD
RLU
RLD
E
L–W
R–W
G–B
W
B–W
L–O
G–R
W–B
IB1
IQ1
IN1
BB1
BA1
2D
2J
2K
2L
PCT
SU
SD
E
U
D
P 6
POWER WINDOW
CONTROL SW
FRONT RH
P 8
POWER WINDOW
CONTROL SW
REAR RH
P 7
POWER WINDOW
CONTROL SW
REAR LH
M
P11
POWER WINDOW
MOTOR FRONT RH
P13
POWER WINDOW
MOTOR REAR RH
P12
POWER WINDOW
MOTOR REAR LH
J17
JUNCTION
CONNECTOR
J11
JUNCTION
CONNECTOR
IG
BI
ID

POWER WINDOW

SYSTEM OUTLINE

Communication between power window master SW and body ECU is controlled and body ECU recognizes the conditions of each SW to control the operation of windows.

1. MANUAL UP OR DOWN OPERATION (DRIVER'S WINDOW, PASSENGER'S WINDOW)

During you are pushing power window master SW (Driver side) halfway down, the motor operates and the window on the driver's side opens. During you are pulling power window master SW (Driver side) halfway up, the motor operates and the windows on the driver's side closes. The window on the passenger's side opens or closes by pushing down or pulling up power window master SW (Front passenger, rear passenger) or power window SW front RH, rear LH, RH.

2. AUTO UP OR DOWN OPERATION (DRIVER'S WINDOW)

When the power window master SW (Driver side) is fully pushed down, the motor operates and the window on the driver's side automatically opens. When the power window master SW (Driver side) is fully pulled up, the motor operates and the window on the driver's side automatically closes.

3. STOPPING AUTOMATIC WINDOW OPERATION

If you push the power window master SW (Driver side) halfway down during the window on the driver's side is raising automatically, the motor's operation stops. And if you pull the power window master SW (Driver side) halfway up during the window on the driver's side is lowering automatically, the motor's operation stops.

4. KEY OFF POWER WINDOW OPERATION

After the Ignition SW is turned off, the windows can be operated for about 43 seconds. However, the window operation stops when either front doors opens.

5. JAM PROTECTION FUNCTION (DRIVER'S WINDOW)

When any foreign object gets caught during power window UP operation, the motor rotates in the opposite direction to open the window.

SERVICE HINTS

P9 POWER WINDOW MASTER SW

1–GROUND : Always approx. **12** volts
4–GROUND : Approx. **12** volts with the ignition SW at **ON** position
9–GROUND : Always continuity

B8 (A), B9 (B) BODY ECU

15–GROUND : Approx. **12** volts with the ignition SW at **ON** position
(B)9–GROUND : Always approx. 12 volts

: PARTS LOCATION

Code	See Page	Code	See Page	Code	See Page
B8 A	36	J15 B	37	P7	39
B9 B	36	J16	37	P8	39
D4	36	J17	37	P9	39
D6	38	J20	37	P10	39
D7	38	J24 A	37	P11	39
J12 A	37	J25 B	37	P12	39
J13 B	37	J27	37	P13	39
J14 A	37	P6	39		

: JUNCTION BLOCK AND WIRE HARNESS CONNECTOR

Code	See Page	Junction Block and Wire Harness (Connector Location)
1J	27	Engine Room Main Wire and Engine Room J/B (Engine Compartment Left)
2C	30	Instrument Panel Wire and Instrument Panel J/B (Cowl Side Panel LH)
2D		
2G	31	Engine Room Main Wire and Instrument Panel J/B (Cowl Side Panel LH)
2I	31	Cowl Wire and Instrument Panel J/B (Cowl Side Panel LH)
2J		
2K		
2L	31	Floor Wire and Instrument Panel J/B (Cowl Side Panel LH)

: CONNECTOR JOINING WIRE HARNESS AND WIRE HARNESS

Code	See Page	Joining Wire Harness and Wire Harness (Connector Location)
IB1	42	Floor Wire and Cowl Wire (Cowl Side Panel LH)
IC1	42	Front Door LH Wire and Cowl Wire (Left Kick Panel)
IG1	42	Front Door LH Wire and Instrument Panel Wire (Left Kick Panel)
IN1	44	Front Door RH Wire and Instrument Panel Wire (Right Kick Panel)
IQ1	44	Front Door RH Wire and Cowl Wire (Right Kick Panel)
BA1	46	Rear Door No.2 Wire and Floor Wire (Center Pillar LH)
BB1	46	Rear Door No.1 Wire and Cowl Wire (Center Pillar RH)

: GROUND POINTS

Code	See Page	Ground Points Location
IG	42	Cowl Side Panel RH
BI	46	Left Side of Rear Pillar

REMOTE CONTROL MIRROR

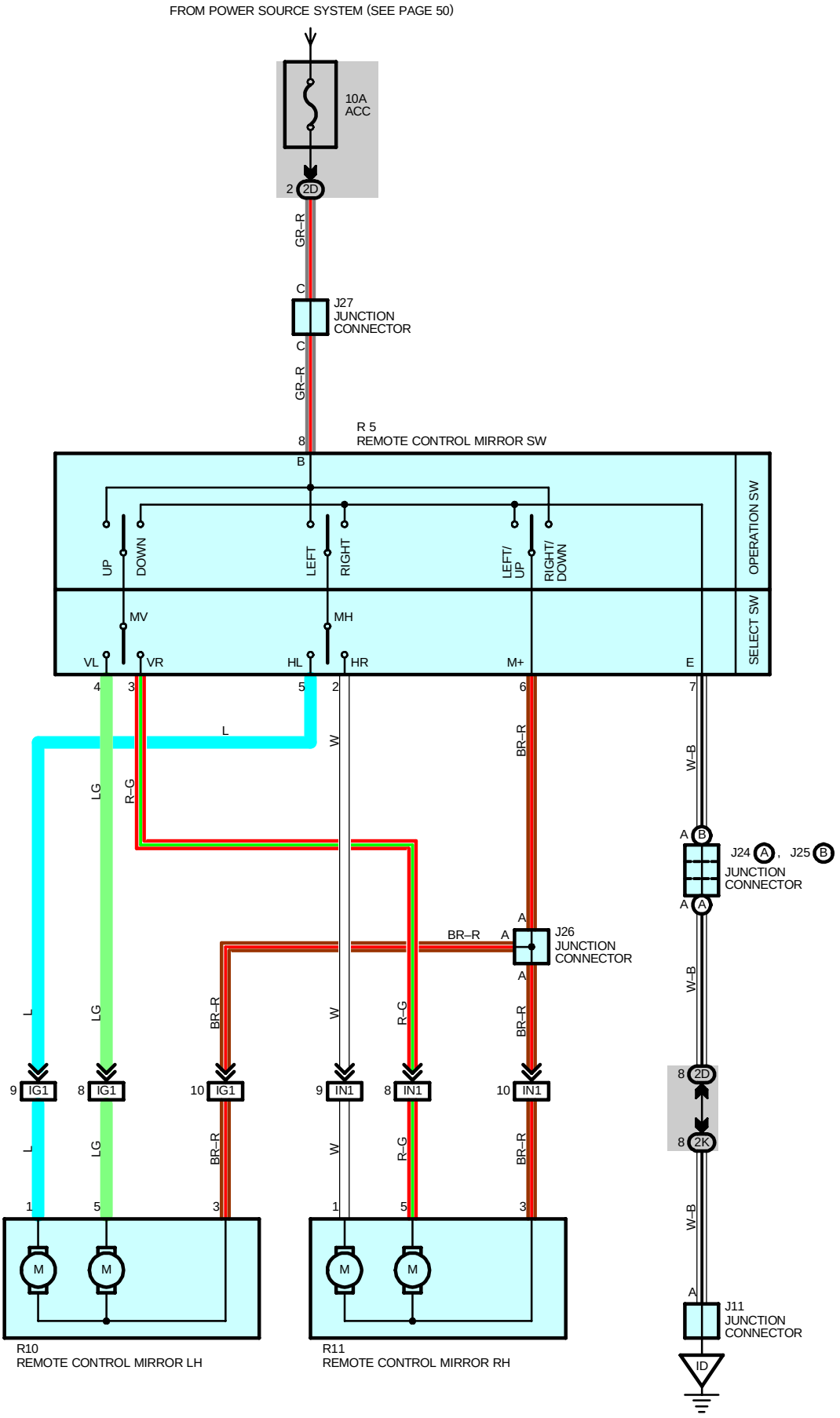

SERVICE HINTS

R5 REMOTE CONTROL MIRROR SW

8–GROUND : Approx. **12** volts with the ignition SW at **ACC** or **ON** position

6–7 : Continuity with the operation SW at **UP** or **LEFT** position

8–6 : Continuity with the operation SW at **DOWN** or **RIGHT** position

: PARTS LOCATION

Code		See Page	Code	See Page	Code	See Page
J11		37	J26	37	R10	39
J24	A	37	J27	37	R11	39
J25	B	37	R5	37		

: JUNCTION BLOCK AND WIRE HARNESS CONNECTOR

Code	See Page	Junction Block and Wire Harness (Connector Location)
2D	30	Instrument Panel Wire and Instrument Panel J/B (Cowl Side Panel LH)
2K	31	Cowl Wire and Instrument Panel J/B (Cowl Side Panel LH)

: CONNECTOR JOINING WIRE HARNESS AND WIRE HARNESS

Code	See Page	Joining Wire Harness and Wire Harness (Connector Location)
IG1	42	Front Door LH Wire and Instrument Panel Wire (Left Kick Panel)
IN1	44	Front Door RH Wire and Instrument Panel Wire (Right Kick Panel)

: GROUND POINTS

Code	See Page	Ground Points Location
ID	42	Cowl Side Panel LH

SHIFT LOCK

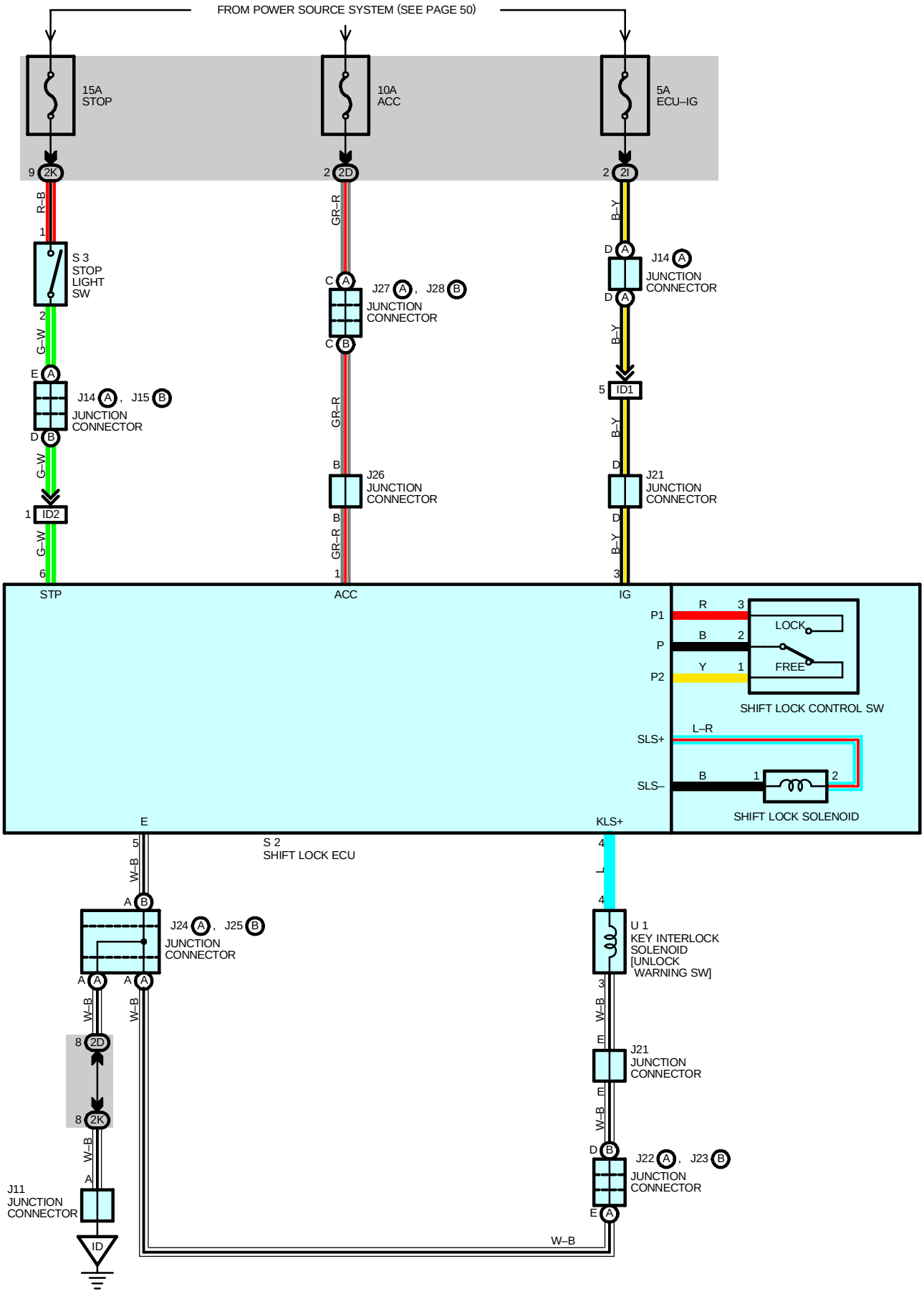
FROM POWER SOURCE SYSTEM (SEE PAGE 50)
15A
STOP
10A
ACC
5A
ECU–IG
9 2K
2 2D
2 2I
R–B
GR–R
B–Y
1
S 3
STOP
LIGHT
SW
2
G–W
C A
J27 A , J28 B
JUNCTION
CONNECTOR
C B
D A
J14 A
JUNCTION
CONNECTOR
D A
B–Y
E A
J14 A , J15 B
JUNCTION
CONNECTOR
D B
5 ID1
1 ID2
B
J26
JUNCTION
CONNECTOR
B
D
J21
JUNCTION
CONNECTOR
D
6
1
3
STP
ACC
IG
P1
P
P2
R 3
B 2
Y 1
LOCK
FREE
SHIFT LOCK CONTROL SW
L–R
SLS+
SLS–
B 1 2
SHIFT LOCK SOLENOID
E
KLS+
5
S 2
SHIFT LOCK ECU
4
L
W–B
A B
J24 A , J25 B
JUNCTION
CONNECTOR
A A A A
4
U 1
KEY INTERLOCK
SOLENOID
[UNLOCK
WARNING SW]
3
8 2D
8 2K
E
J21
JUNCTION
CONNECTOR
D B
J22 A , J23 B
JUNCTION
CONNECTOR
E A
J11
JUNCTION
CONNECTOR
ID
W–B

SYSTEM OUTLINE

When the ignition SW is turned to ACC position the current from the ACC fuse flows to TERMINAL 1 of the shift lock ECU, in the ON position, the current from the ECU–IG fuse flows to TERMINAL 3 of the ECU.

1. SHIFT LOCK MECHANISM

With the ignition SW on, when a signal that the brake pedal is depressed (Stop light SW on) and a signal that the shift lever is put in P position (Continuity between P1 and P of the shift lock control SW) is input to the ECU, the ECU operates and current flows from TERMINAL 3 of the ECU to TERMINAL SLS+ of the shift lock solenoid to solenoid to TERMINAL SLS– to TERMINAL 5 of the ECU to GROUND. This causes the shift lock solenoid to turn on (Plate stopper disengages) and the shift lever can shift into position other than the P.

2. KEY INTERLOCK MECHANISM

With the ignition SW ON or ACC position, when the shift lever is put in P position (No continuity between P2 and P of shift lock control SW), the current flowing from TERMINAL 4 of the ECU to the key interlock solenoid is cut off. This causes the key interlock solenoid to turn off (Lock lever disengages from LOCK position) and the ignition key can be turned from ACC to LOCK position.

SERVICE HINTS

S2 SHIFT LOCK ECU

1–GROUND : Approx. **12** volts with the ignition SW at **ACC** or **ON** position
3–GROUND : Approx. **12** volts with the ignition SW at **ON** position
5–GROUND : Always continuity
6–GROUND : Approx. **12** volts with the brake pedal depressed

S3 STOP LIGHT SW

2–1 : Closed with the brake pedal depressed

: PARTS LOCATION

Code	See Page	Code	See Page	Code	See Page
J11	37	J23 B	37	J28 B	37
J14 A	37	J24 A	37	S2	37
J15 B	37	J25 B	37	S3	37
J21	37	J26	37	U1	37
J22 A	37	J27 A	37		

: JUNCTION BLOCK AND WIRE HARNESS CONNECTOR

Code	See Page	Junction Block and Wire Harness (Connector Location)
2D	30	Instrument Panel Wire and Instrument Panel J/B (Cowl Side Panel LH)
2I	31	Cowl Wire and Instrument Panel J/B (Cowl Side Panel LH)
2K		

: CONNECTOR JOINING WIRE HARNESS AND WIRE HARNESS

Code	See Page	Joining Wire Harness and Wire Harness (Connector Location)
ID1	42	Instrument Panel Wire and Cowl Wire (Left Kick Panel)
ID2		

: GROUND POINTS

Code	See Page	Ground Points Location
ID	42	Cowl Side Panel LH

DOOR LOCK CONTROL

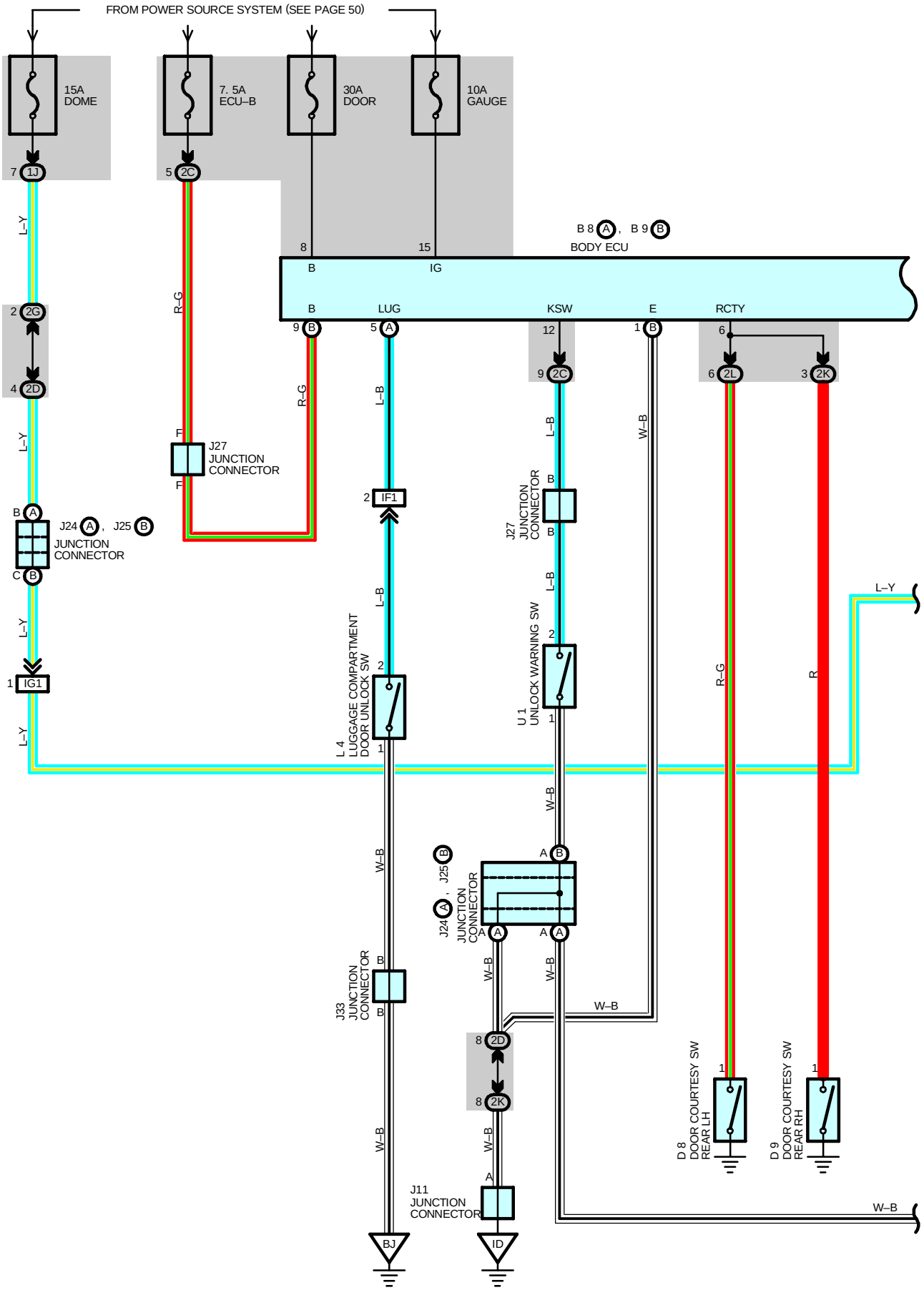

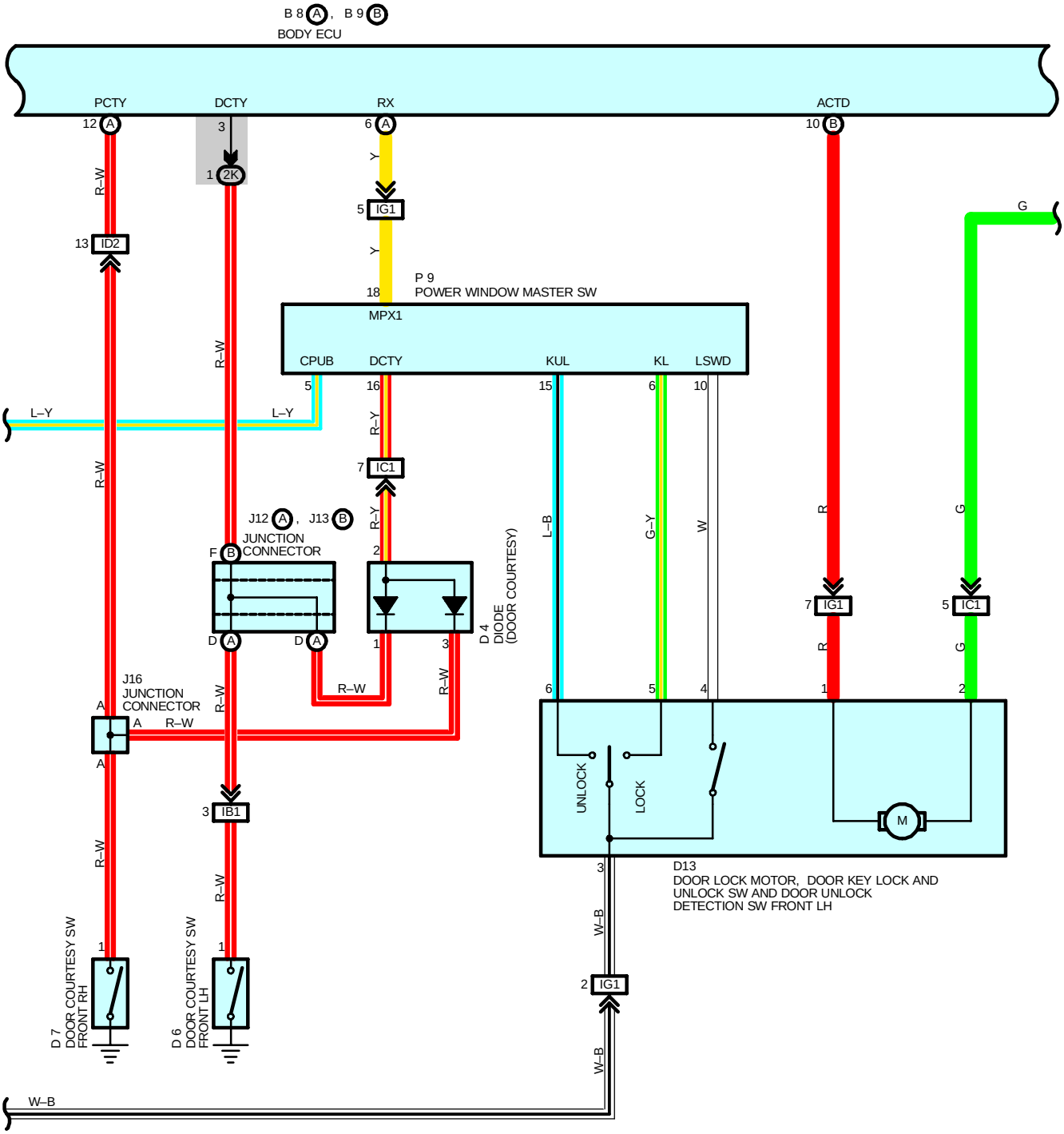
B 8 A , B 9 B
BODY ECU
PCTY
DCTY
RX
ACTD
12 A
3
1 2K
6 A
10 B
R–W
Y
5 IG1
G
13 ID2
P 9
POWER WINDOW MASTER SW
18
MPX1
CPUB
DCTY
KUL
KL
LSWD
5
16
15
6
10
L–Y
L–Y
R–W
R–Y
7 IC1
J12 A , J13 B
JUNCTION
CONNECTOR
F B
2
L–B
G–Y
W
R
G
7 IG1
5 IC1
D A
D A
1
3
D 4
DIODE
(DOOR COURTESY)
J16
JUNCTION
CONNECTOR
A
A
R–W
6
5
4
1
2
UNLOCK
LOCK
M
3 IB1
D13
DOOR LOCK MOTOR, DOOR KEY LOCK AND
UNLOCK SW AND DOOR UNLOCK
DETECTION SW FRONT LH
W–B
2 IG1
D 7
DOOR COURTESY SW
FRONT RH
D 6
DOOR COURTESY SW
FRONT LH
W–B

DOOR LOCK CONTROL

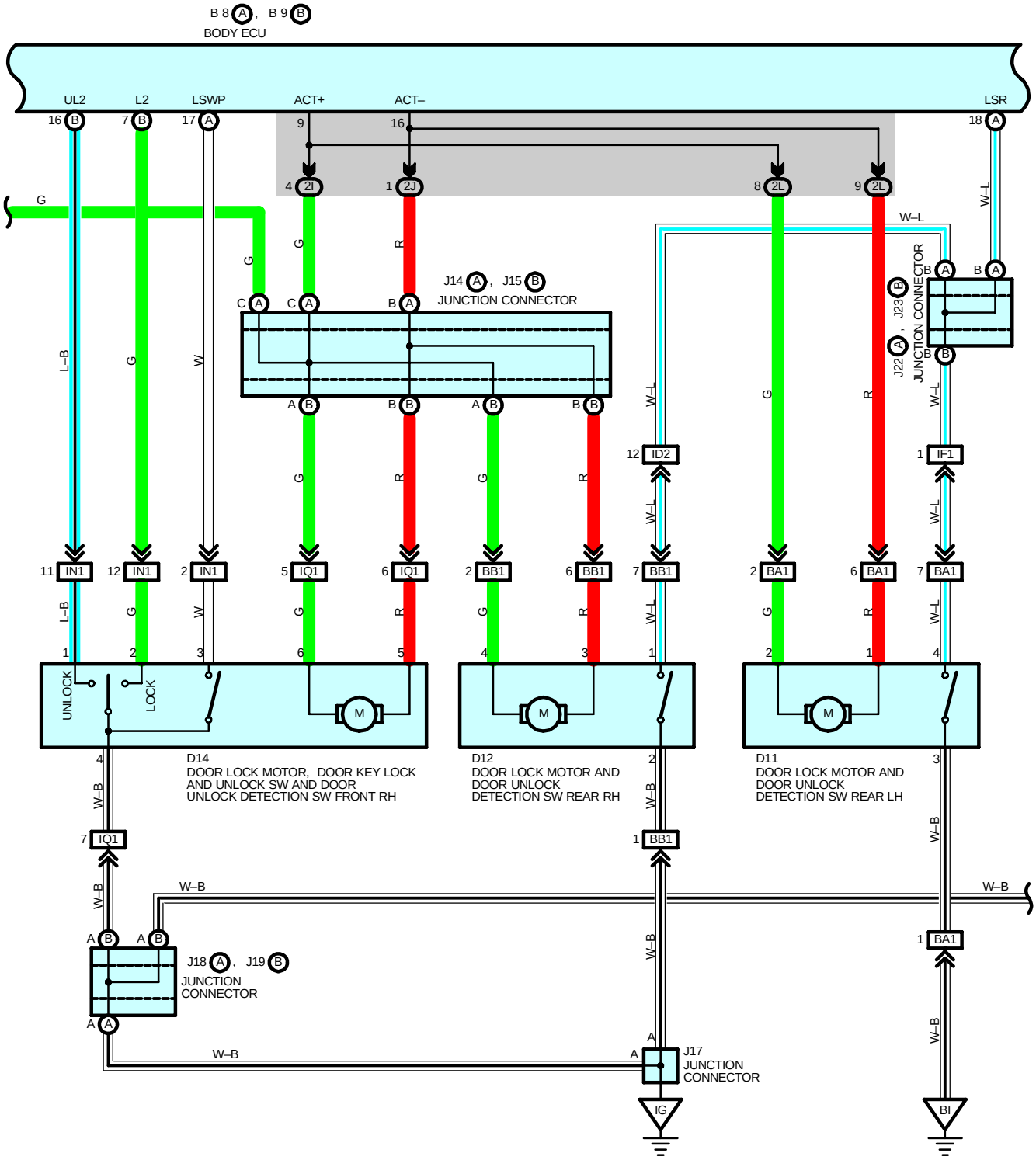

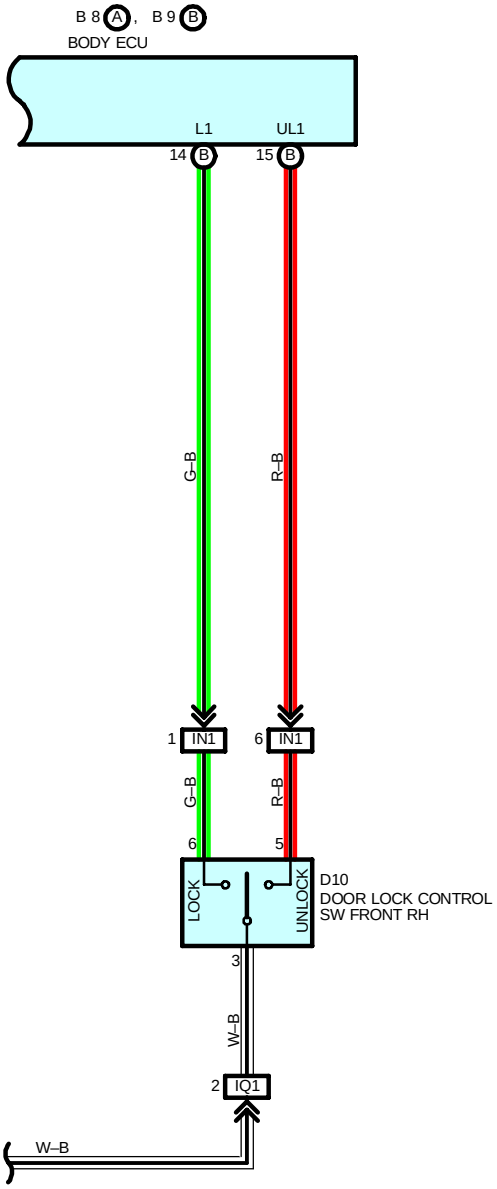
B 8 A , B 9 B
BODY ECU
L1
UL1
14 B
15 B
G–B
R–B
1 IN1
6 IN1
G–B
R–B
6
5
LOCK
UNLOCK
D10
DOOR LOCK CONTROL
SW FRONT RH
3
W–B
2 IQ1
W–B

DOOR LOCK CONTROL

SYSTEM OUTLINE

The current is always sent from DOOR fuse to TERMINAL B of body ECU. When ignition SW is turned on, the current is sent from GAUGE fuse to TERMINAL IG of the body ECU.

1. MANUAL LOCK OPERATION

When the door lock control SW (Power window master SW) is turned to LOCK position, the lock signal from TERMINAL MPX1 of power window master SW is input to TERMINAL RX of body ECU to operate ECU. The current is sent from TERMINAL ACT+ of ECU to each motor and the motor locks the doors by the current sent from TERMINAL ACT– of ECU to GROUND.

2. MANUAL UNLOCK OPERATION

When the door lock control SW (Power window master SW) is turned to UNLOCK position, the unlock signal from TERMINAL MPX1 of power window master SW is input to TERMINAL RX of body ECU to operate ECU. The current is sent from TERMINAL ACT– of ECU to each motor and the motor unlocks the doors by the current sent from TERMINAL ACT+ of ECU to GROUND.

3. DOOR KEY LOCK AND UNLOCK OPERATION

* Lock operation from the driver's side door
  When the driver's side door is locked using the ignition key, all the doors are locked.
* Unlock operation from the driver's side door
  When the driver's side door is unlocked once using the ignition key, only the driver's side door is unlocked. If this operation is repeated within 3 seconds, all the other doors are unlocked.
* Lock operation from the front passenger's side door
  When the front passenger's side door is locked using the ignition key, all the doors are locked.
* Unlock operation from the front passenger's side door
  When the front passenger's side door is unlocked using the ignition key, all the doors are unlocked

SERVICE HINTS

B8 (A), B9 (B) BODY ECU

15–GROUND : Approx. **12** volts with the ignition SW at **ON** position
8–GROUND : Always approx. **12** volts
(B) 1–GROUND : Always continuity

D6, D7, D8, D9 DOOR COURTESY SW FRONT LH, RH, REAR LH, RH

1–GROUND : Closed with each of the door open

U1 UNLOCK WARNING SW

1–2 : Closed with the ignition key in the cylinder

○ : PARTS LOCATION

Code	See Page	Code	See Page	Code	See Page
B8 A	36	D13	38	J19 B	37
B9 B	36	D14	38	J22 A	37
D4	36	J11	37	J23 B	37
D6	38	J12 A	37	J24 A	37
D7	38	J13 B	37	J25 B	37
D8	38	J14 A	37	J27	37
D9	38	J15 B	37	J33	38
D10	38	J16	37	L4	38
D11	38	J17	37	P9	39
D12	38	J18 A	37	U1	37

: JUNCTION BLOCK AND WIRE HARNESS CONNECTOR

Code	See Page	Junction Block and Wire Harness (Connector Location)
1J	27	Engine Room Main Wire and Engine Room J/B (Engine Compartment Left)
2C	30	Instrument Panel Wire and Instrument Panel J/B (Cowl Side Panel LH)
2D		
2G	31	Engine Room Main Wire and Instrument Panel J/B (Cowl Side Panel LH)
2I	31	Cowl Wire and Instrument Panel J/B (Cowl Side Panel LH)
2J		
2K		
2L	31	Floor Wire and Instrument Panel J/B (Cowl Side Panel LH)

: CONNECTOR JOINING WIRE HARNESS AND WIRE HARNESS

Code	See Page	Joining Wire Harness and Wire Harness (Connector Location)
IB1	42	Floor Wire and Cowl Wire (Cowl Side Panel LH)
IC1	42	Front Door LH Wire and Cowl Wire (Left Kick Panel)
ID2	42	Instrument Panel Wire and Cowl Wire (Left Kick Panel)
IF1	42	Instrument Panel Wire and Floor Wire (Left Kick Panel)
IG1	42	Front Door LH Wire and Instrument Panel Wire (Left Kick Panel)
IN1	44	Front Door RH Wire and Instrument Panel Wire (Right Kick Panel)
IQ1	44	Front Door RH Wire and Cowl Wire (Right Kick Panel)
BA1	46	Rear Door No.2 Wire and Floor Wire (Center Pillar LH)
BB1	46	Rear Door No.1 Wire and Cowl Wire (Center Pillar RH)

: GROUND POINTS

Code	See Page	Ground Points Location
ID	42	Cowl Side Panel LH
IG	42	Cowl Side Panel RH
BI	46	Left Side of Rear Pillar
BJ	46	Right Side of Rear Pillar

WIRELESS DOOR LOCK CONTROL

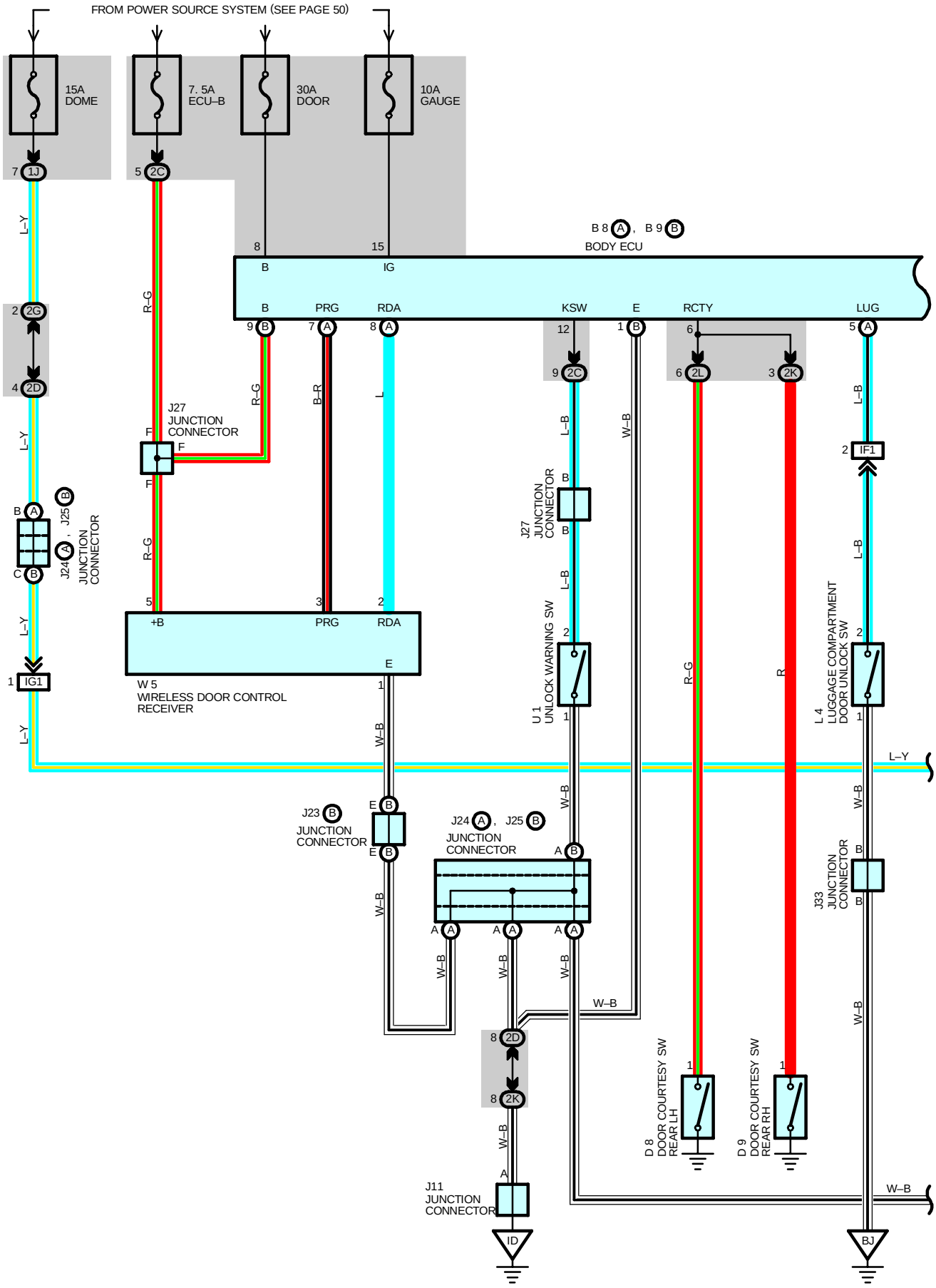

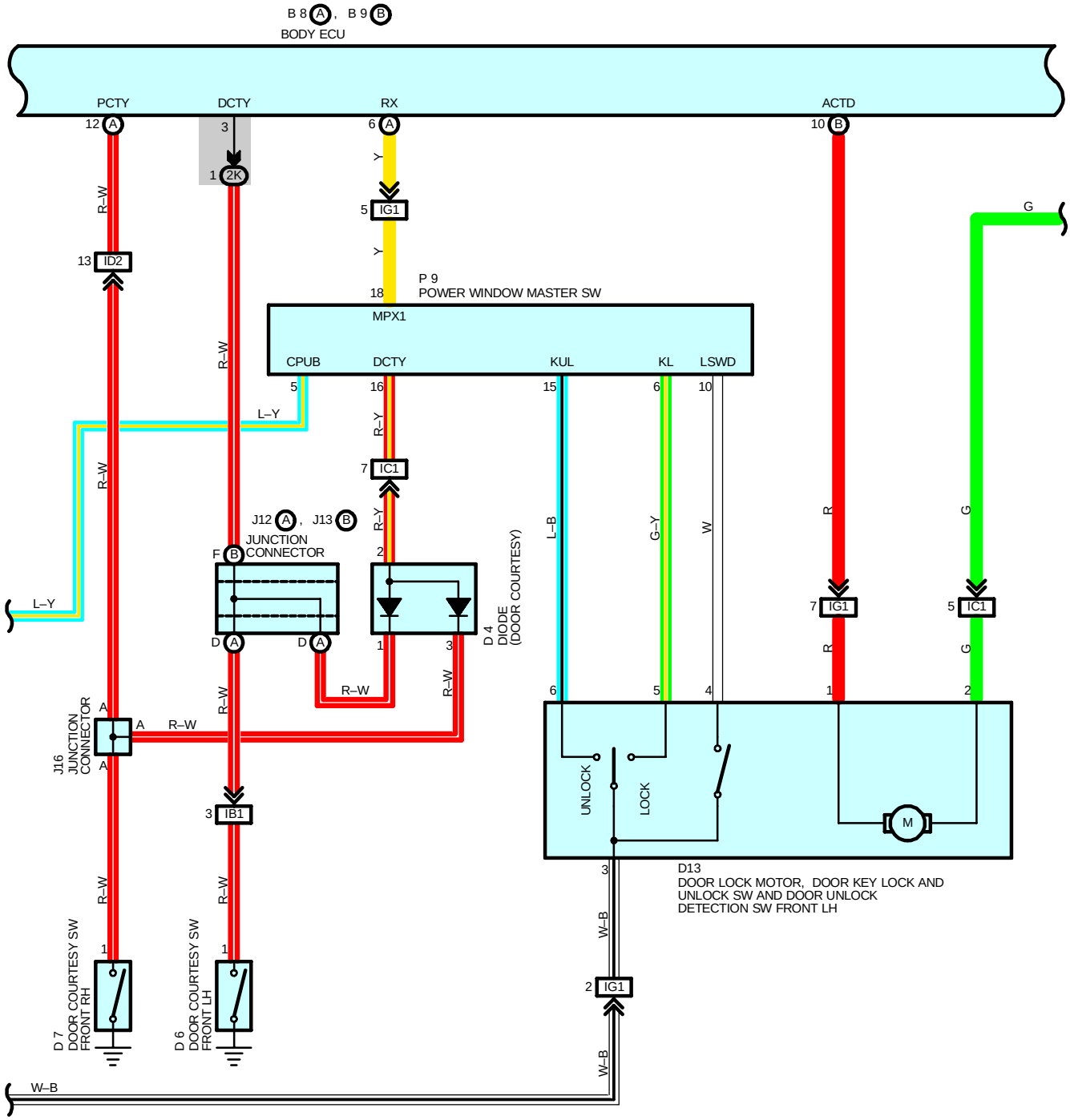
B 8 A , B 9 B
BODY ECU
PCTY
DCTY
RX
ACTD
12 A
3
1 2K
6 A
10 B
Y
5 IG1
G
13 ID2
P 9
POWER WINDOW MASTER SW
18
MPX1
CPUB
DCTY
KUL
KL
LSWD
5
16
15
6
10
R–W
L–Y
R–Y
7 IC1
J12 A , J13 B
JUNCTION CONNECTOR
F B
2
D A
D A
1
3
D 4
DIODE
(DOOR COURTESY)
L–B
G–Y
W
R
G
7 IG1
5 IC1
6
5
4
1
2
J16
JUNCTION CONNECTOR
A
A
3 IB1
UNLOCK
LOCK
M
D13
DOOR LOCK MOTOR, DOOR KEY LOCK AND
UNLOCK SW AND DOOR UNLOCK
DETECTION SW FRONT LH
3
W–B
2 IG1
D 7
DOOR COURTESY SW
FRONT RH
D 6
DOOR COURTESY SW
FRONT LH
W–B

WIRELESS DOOR LOCK CONTROL

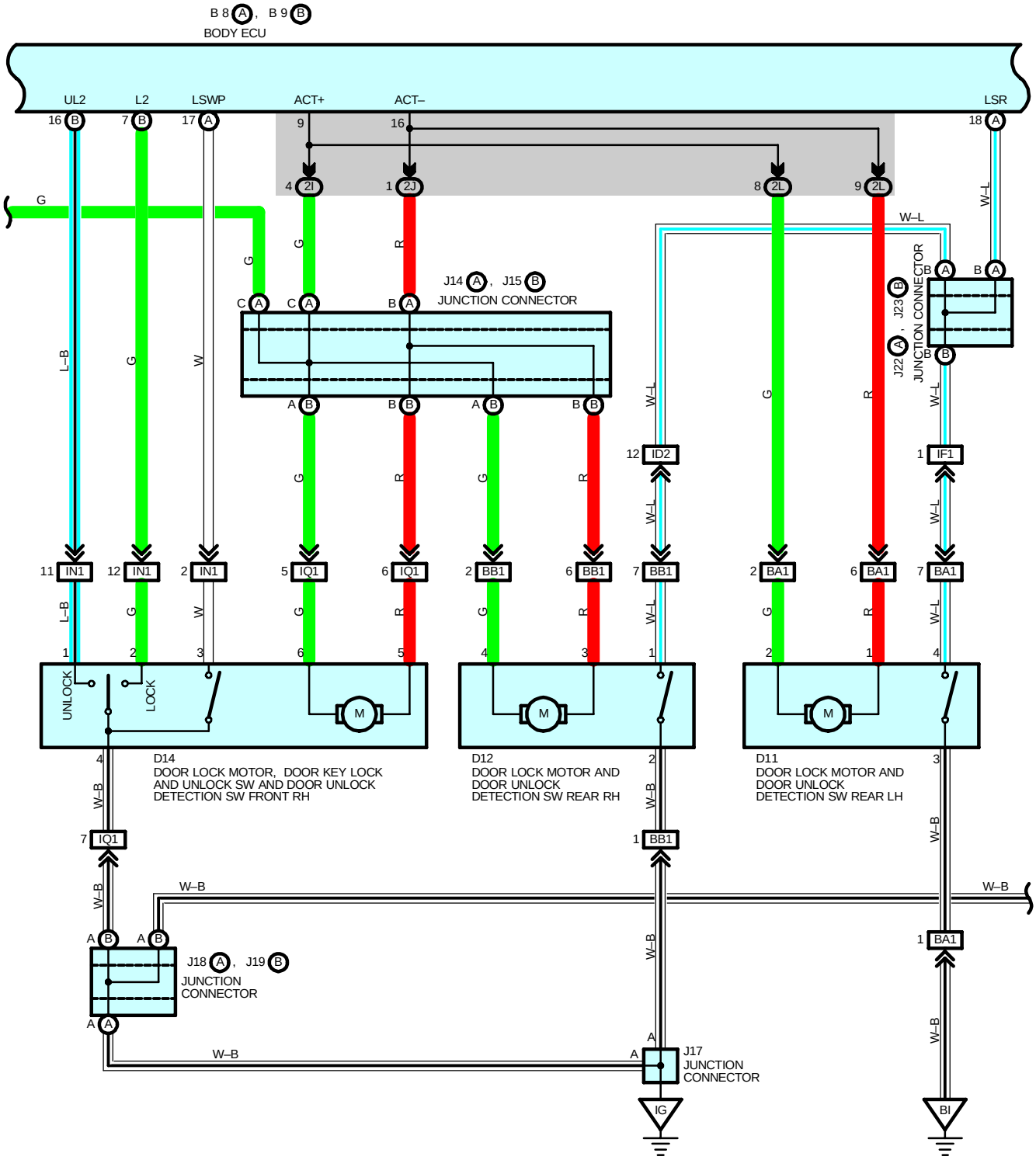

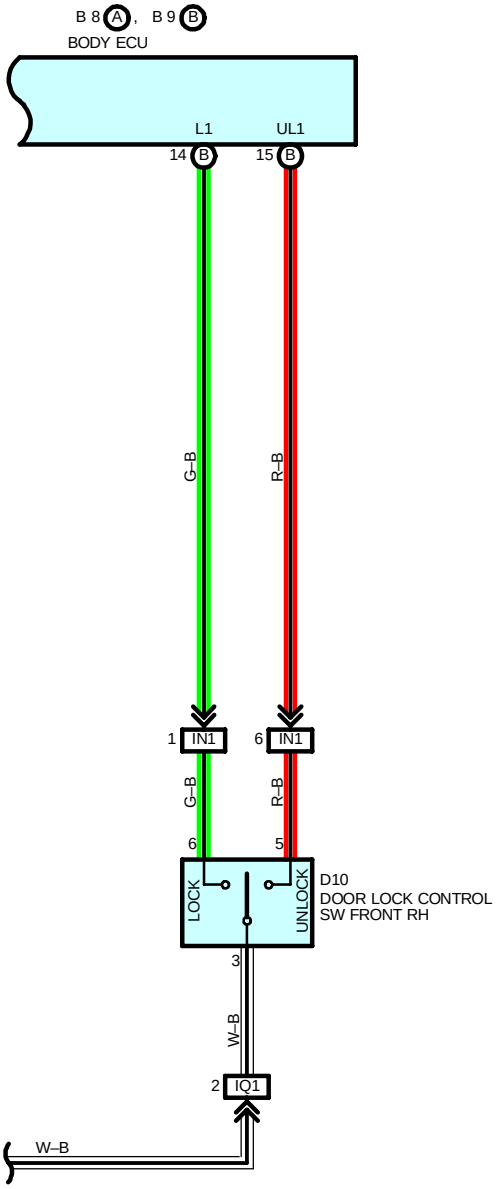
B 8 A , B 9 B
BODY ECU
L1
UL1
14 B
15 B
G–B
R–B
1 IN1
6 IN1
G–B
R–B
6
5
LOCK
UNLOCK
D10
DOOR LOCK CONTROL
SW FRONT RH
3
W–B
2 IQ1
W–B

WIRELESS DOOR LOCK CONTROL

SYSTEM OUTLINE

The current is always sent from DOOR fuse to TERMINAL B of body ECU. At the same time, the current is always sent from DOME fuse to TERMINAL CPUB of power window master SW, and from ECU–B fuse to wireless door lock receiver. When ignition SW is turned on, the current is sent from GAUGE fuse to TERMINAL IG of body ECU.

1. WIRELESS DOOR LOCK OR UNLOCK NORMAL OPERATION

∗ Lock operation
When the LOCK SW of the transmitter is pushed, all the doors are locked.
∗ Unlock operation
When the UNLOCK SW of the transmitter is pushed, all the doors are unlocked.

2. AUTOMATIC LOCK OPERATION

After all the doors are unlocked by pushing the UNLOCK SW of the transmitter, unless each of the doors is opened or the ignition key is inserted, all the doors are locked again.

3. VISUAL CONFIRMATION OF LOCK OR UNLOCK FUNCTION

When doors are locked by using the transmitter, the taillight and parking lights blink once. When doors are unlocked by using the transmitter, the taillights and parking lights blink twice. If UNLOCK SW of the transmitter is pushed while all the doors are locked, doors are unlocked and the room lights are turned on simultaneously.

4. WIRELESS CONTROL STOP FUNCTION

If the following situations occur, wireless door lock function does not operate.
∗ When each of the doors opens. (Door courtesy SW is on)
∗ When ignition key is inserted to ignition SW. (Unlock warning SW is on)
∗ When ignition SW is on.

5. REPEAT FUNCTION

If the doors are not locked after the lock signal is out put from transmitter by pushing LOCK SW, the lock signal is sent again to lock the doors.

6. PANIC MODE FUNCTION

When the panic SW of the transmitter is pushed, the horn comes on, and the headlight and taillight flashes.

SERVICE HINTS

B8 (A), B9 (B) BODY ECU

15–GROUND : Approx. **12** volts with the ignition SW at **ON** position
8–GROUND : Always approx. **12** volts
(B) 1–GROUND : Always continuity

W5 WIRELESS DOOR LOCK CONTROL RECEIVER

5–GROUND : Always approx. **12** volts
1–GROUND : Always continuity

U1 UNLOCK WARNING SW

2–1 : Closed with the ignition key in the cylinder

○ : PARTS LOCATION

Code	See Page	Code	See Page	Code	See Page
B8 A	36	D14	38	J23 B	37
B9 B	36	J11	37	J24 A	37
D4	36	J12 A	37	J25 B	37
D6	38	J13 B	37	J27	37
D7	38	J14 A	37	J33	38
D8	38	J15 B	37	L4	38
D9	38	J16	37	P9	39
D10	38	J17	37	U1	37
D11	38	J18 A	37	W5	37
D12	38	J19 B	37		
D13	38	J22 A	37		

: JUNCTION BLOCK AND WIRE HARNESS CONNECTOR

Code	See Page	Junction Block and Wire Harness (Connector Location)
1J	27	Engine Room Main Wire and Engine Room J/B (Engine Compartment Left)
2C	30	Instrument Panel Wire and Instrument Panel J/B (Cowl Side Panel LH)
2D		
2G	31	Engine Room Main Wire and Instrument Panel J/B (Cowl Side Panel LH)
2I	31	Cowl Wire and Instrument Panel J/B (Cowl Side Panel LH)
2J		
2K		
2L	31	Floor Wire and Instrument Panel J/B (Cowl Side Panel LH)

: CONNECTOR JOINING WIRE HARNESS AND WIRE HARNESS

Code	See Page	Joining Wire Harness and Wire Harness (Connector Location)
IB1	42	Floor Wire and Cowl Wire (Cowl Side Panel LH)
IC1	42	Front Door LH Wire and Cowl Wire (Left Kick Panel)
ID2	42	Instrument Panel Wire and Cowl Wire (Left Kick Panel)
IF1	42	Instrument Panel Wire and Floor Wire (Left Kick Panel)
IG1	42	Front Door LH Wire and Instrument Panel Wire (Left Kick Panel)
IN1	44	Front Door RH Wire and Instrument Panel Wire (Right Kick Panel)
IQ1	44	Front Door RH Wire and Cowl Wire (Right Kick Panel)
BA1	46	Rear Door No.2 Wire and Floor Wire (Center Pillar LH)
BB1	46	Rear Door No.1 Wire and Cowl Wire (Center Pillar RH)

: GROUND POINTS

Code	See Page	Ground Points Location
ID	42	Cowl Side Panel LH
IG	42	Cowl Side Panel RH
BI	46	Left Side of Rear Pillar
BJ	46	Right Side of Rear Pillar

THEFT DETERRENT

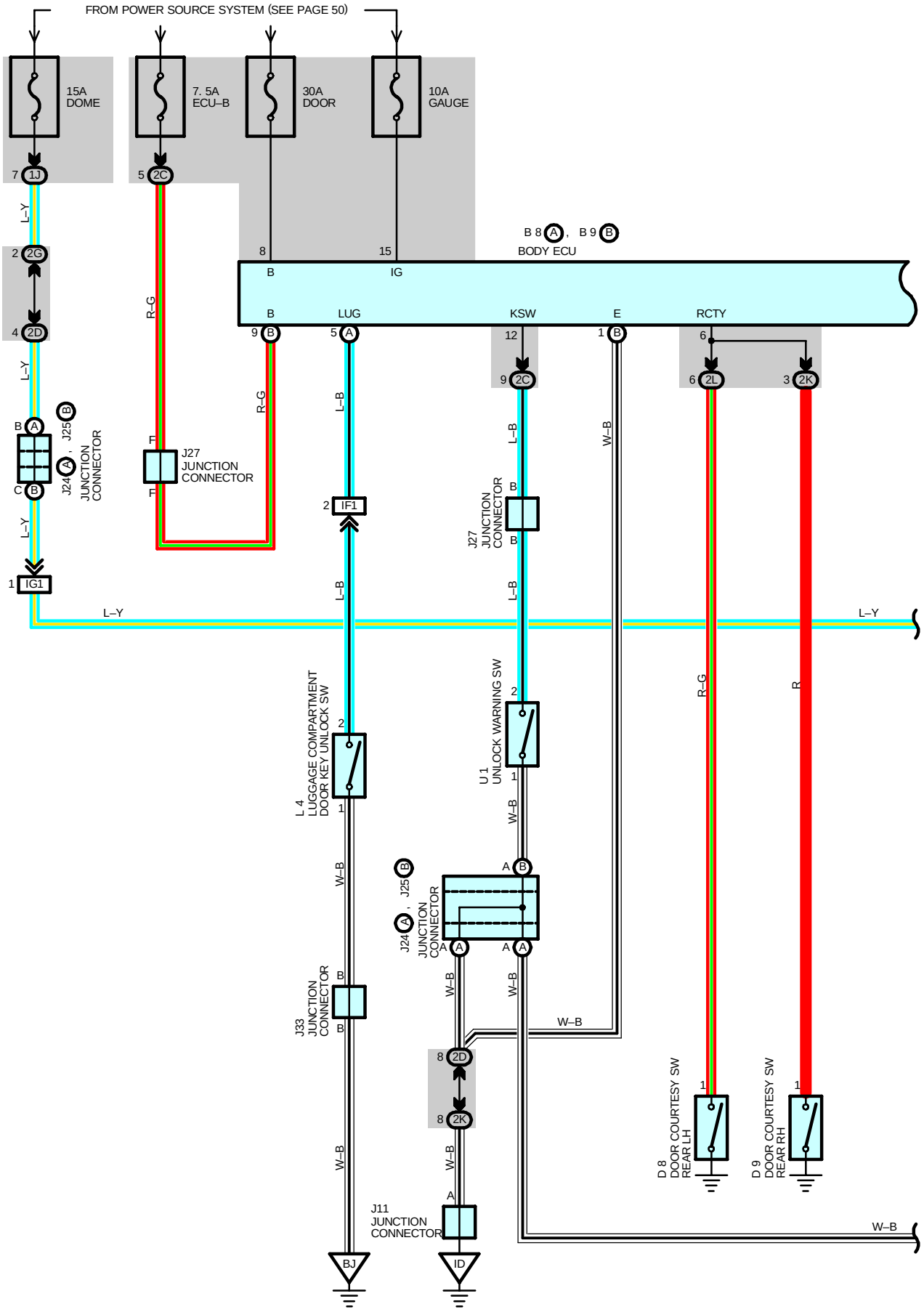

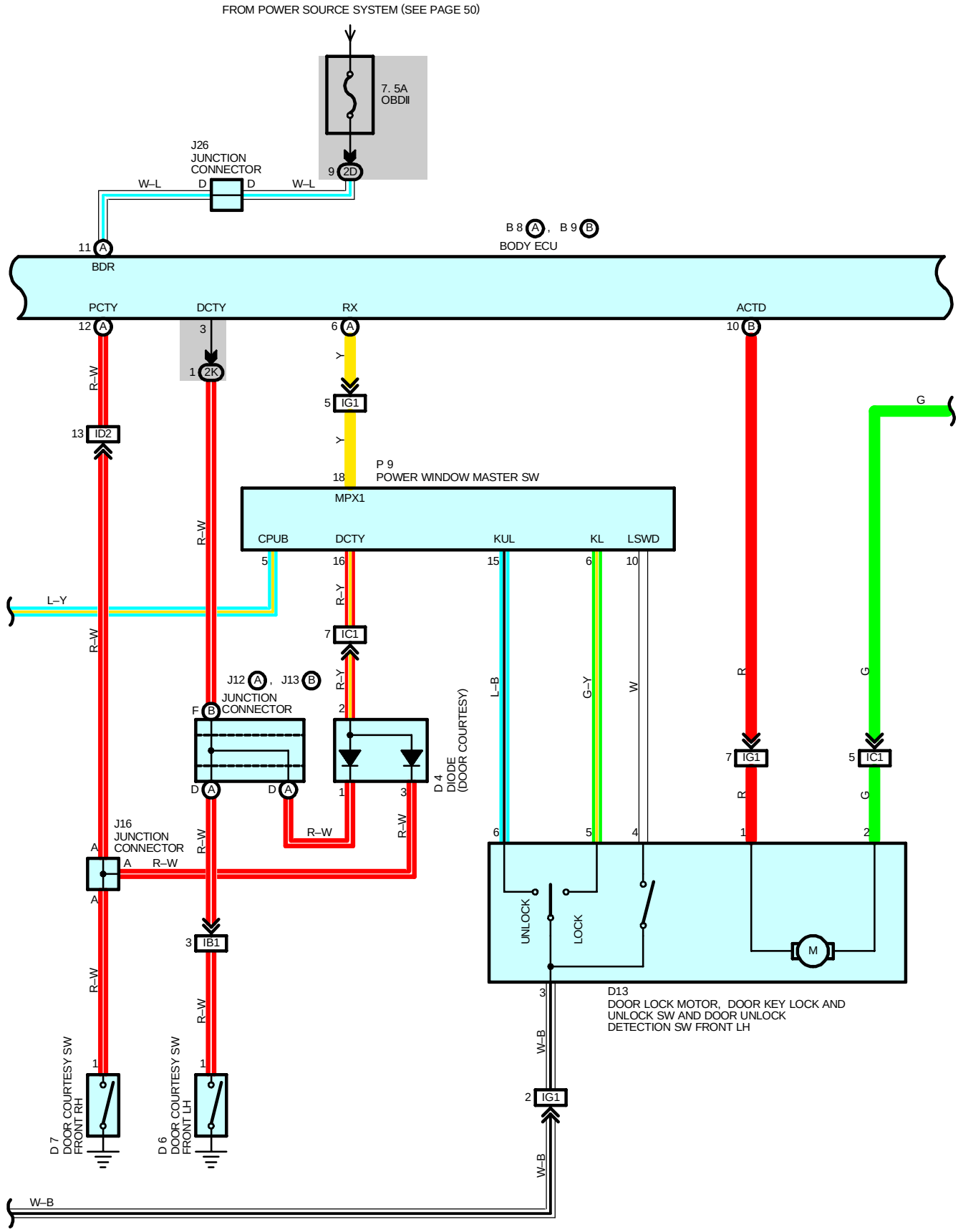
FROM POWER SOURCE SYSTEM (SEE PAGE 50)
7. 5A
OBDII
J26
JUNCTION
CONNECTOR
9 2D
W–L
D
D
W–L
11 A
BDR
B 8 A , B 9 B
BODY ECU
PCTY
DCTY
RX
ACTD
12 A
3
1 2K
6 A
10 B
R–W
Y
5 IG1
13 ID2
G
18
P 9
POWER WINDOW MASTER SW
MPX1
CPUB
DCTY
KUL
KL
LSWD
5
16
15
6
10
L–Y
R–W
R–Y
7 IC1
J12 A , J13 B
JUNCTION
CONNECTOR
F B
2
L–B
G–Y
W
R
G
D A
D A
1
3
D 4
DIODE
(DOOR COURTESY)
7 IG1
5 IC1
J16
JUNCTION
CONNECTOR
A
A
R–W
6
5
4
1
2
UNLOCK
LOCK
M
3 IB1
3
D13
DOOR LOCK MOTOR, DOOR KEY LOCK AND
UNLOCK SW AND DOOR UNLOCK
DETECTION SW FRONT LH
W–B
2 IG1
1
D 7
DOOR COURTESY SW
FRONT RH
D 6
DOOR COURTESY SW
FRONT LH
W–B

THEFT DETERRENT

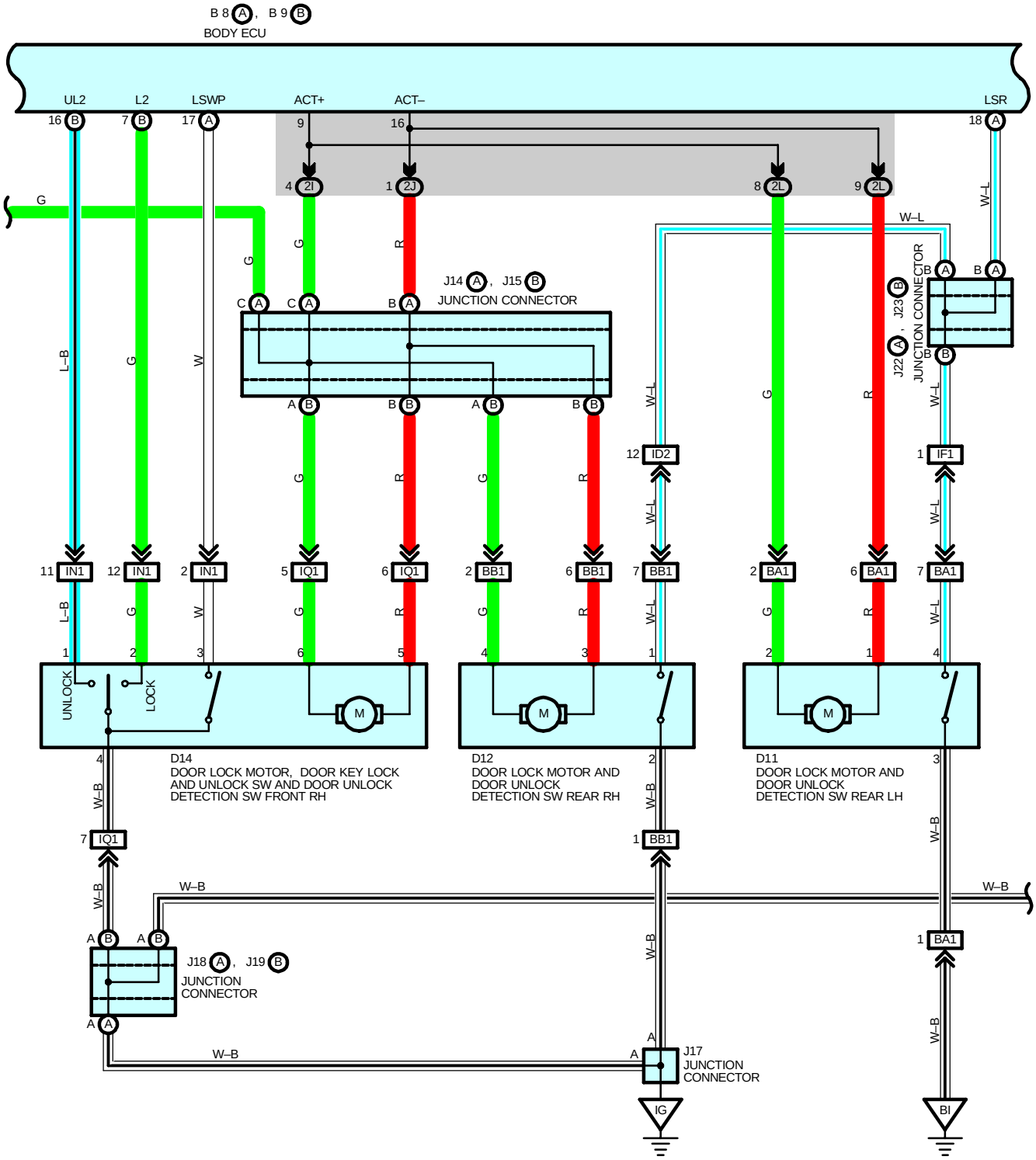

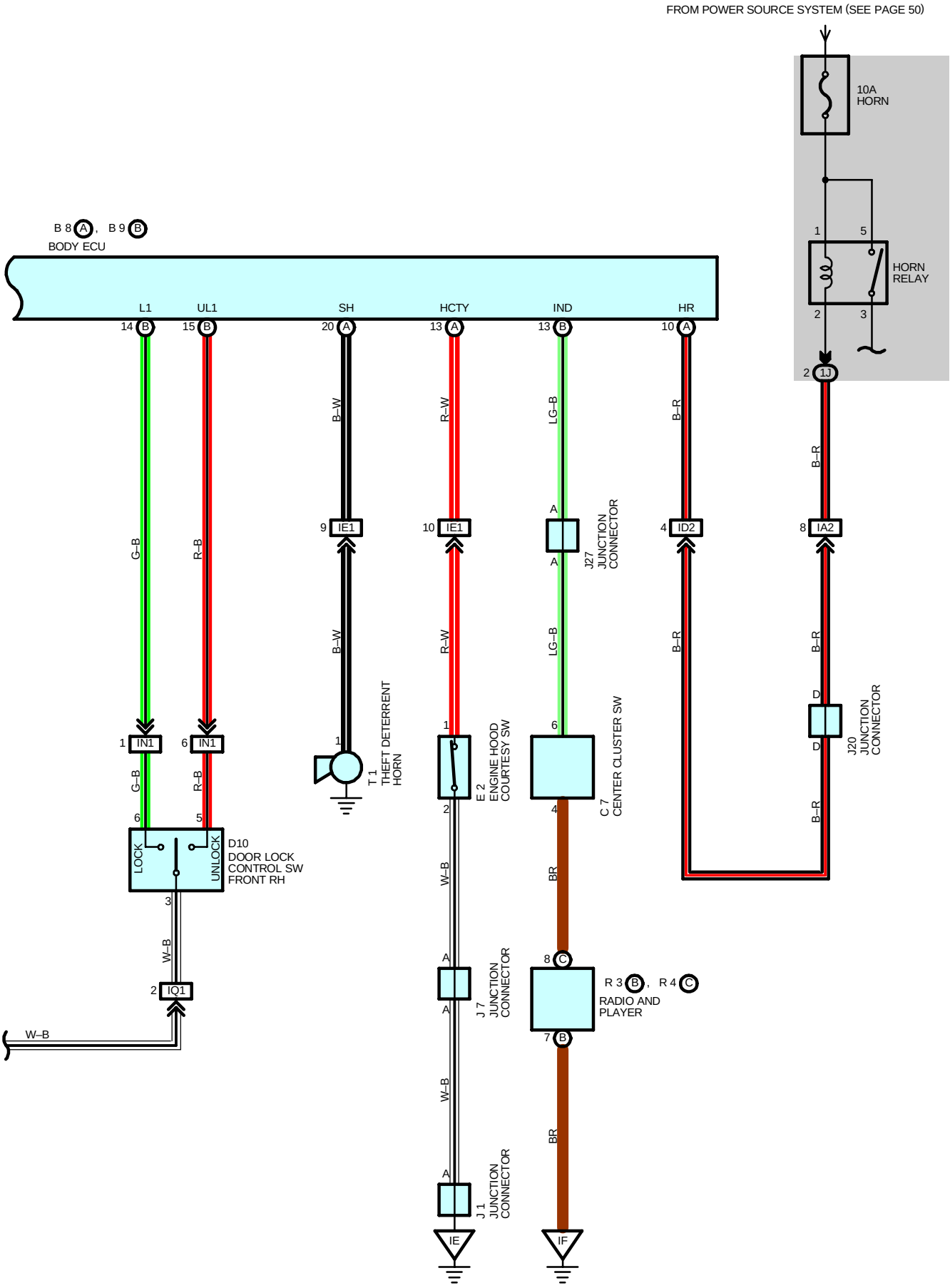
FROM POWER SOURCE SYSTEM (SEE PAGE 50)
10A
HORN
HORN
RELAY
B 8 A , B 9 B
BODY ECU
L1
UL1
SH
HCTY
IND
HR
14 B
15 B
20 A
13 A
13 B
10 A
2 1J
G–B
R–B
B–W
R–W
LG–B
B–R
9 IE1
10 IE1
A
J27
JUNCTION
CONNECTOR
4 ID2
8 IA2
1 IN1
6 IN1
T 1
THEFT DETERRENT
HORN
E 2
ENGINE HOOD
COURTESY SW
C 7
CENTER CLUSTER SW
D
J20
JUNCTION
CONNECTOR
LOCK
UNLOCK
D10
DOOR LOCK
CONTROL SW
FRONT RH
3
W–B
2 IQ1
W–B
J 7
JUNCTION
CONNECTOR
8 C
R 3 B , R 4 C
RADIO AND
PLAYER
7 B
BR
J 1
JUNCTION
CONNECTOR
IE
IF

THEFT DETERRENT

SERVICE HINTS

D13 DOOR KEY LOCK AND UNLOCK SW AND DOOR UNLOCK DETECTION SW FRONT LH

6–3 : Closed with door lock cylinder unlocked with key
5–3 : Closed with door lock cylinder locked with key

D14 DOOR KEY LOCK AND UNLOCK SW AND DOOR UNLOCK DETECTION SW FRONT RH

1–4 : Closed with door lock cylinder unlocked with key
2–4 : Closed with door lock cylinder locked with key

E2 ENGINE HOOD COURTESY SW

2–1 : Open with engine hood open

U1 UNLOCK WARNING SW

2–1 : Closed with ignition key in cylinder

L4 LUGGAGE COMPARTMENT DOOR KEY UNLOCK SW

2–1 : Closed with luggage compartment door lock cylinder unlock

B8 (A), B9 (B) BODY ECU

(A)17–GROUND : Continuity with front RH door unlocked
(B) 1–GROUND : Always continuity
(A) 5–GROUND : Continuity with luggage compartment door unlocked
(A)13–GROUND : Continuity with engine hood closed
(A) 5–GROUND : Continuity with luggage compartment door open
(A)12–GROUND : Continuity with front RH door open
(B) 9–GROUND : Always approx. **12** volts
8–GROUND : Always approx. **12** volts
15–GROUND : Approx. **12** volts with the ignition SW at **ON** position
6–GROUND : Continuity with rear LH, RH door open
3–GROUND : Continuity with front LH door open

: PARTS LOCATION

Code	See Page	Code	See Page	Code	See Page
B8 A	36	E2	34	J22 A	37
B9 B	36	J1	37	J23 B	37
C7	36	J7	37	J24 A	37
D4	36	J11	37	J25 B	37
D6	38	J12 A	37	J26	37
D7	38	J13 B	37	J27	37
D8	38	J14 A	37	J33	38
D9	38	J15 B	37	L4	38
D10	38	J16	37	P9	39
D11	38	J17	37	R3 B	37
D12	38	J18 A	37	R4 C	37
D13	38	J19 B	37	T1	35
D14	38	J20	37	U1	37

: JUNCTION BLOCK AND WIRE HARNESS CONNECTOR

Code	See Page	Junction Block and Wire Harness (Connector Location)
1J	27	Engine Room Main Wire and Engine Room J/B (Engine Compartment Left)
2C	30	Instrument Panel Wire and Instrument Panel J/B (Cowl Side Panel LH)
2D		
2G	31	Engine Room Main Wire and Instrument Panel J/B (Cowl Side Panel LH)
2I	31	Cowl Wire and Instrument Panel J/B (Cowl Side Panel LH)
2J		
2K		
2L	31	Floor Wire and Instrument Panel J/B (Cowl Side Panel LH)

: CONNECTOR JOINING WIRE HARNESS AND WIRE HARNESS

Code	See Page	Joining Wire Harness and Wire Harness (Connector Location)
IA2	42	Engine Room Main Wire and Cowl Wire (Cowl Side Panel LH)
IB1	42	Floor Wire and Cowl Wire (Cowl Side Panel LH)
IC1	42	Front Door LH Wire and Cowl Wire (Left Kick Panel)
ID2	42	Instrument Panel Wire and Cowl Wire (Left Kick Panel)
IE1	42	Instrument Panel Wire and Engine Room Main Wire (Left Kick Panel)
IF1	42	Instrument Panel Wire and Floor Wire (Left Kick Panel)
IG1	42	Front Door LH Wire and Instrument Panel Wire (Left Kick Panel)
IN1	44	Front Door RH Wire and Instrument Panel Wire (Right Kick Panel)
IQ1	44	Front Door RH Wire and Cowl Wire (Right Kick Panel)
BA1	46	Rear Door No.2 Wire and Floor Wire (Center Pillar LH)
BB1	46	Rear Door No.1 Wire and Cowl Wire (Center Pillar RH)

: GROUND POINTS

Code	See Page	Ground Points Location
ID	42	Cowl Side Panel LH
IE		
IF	42	Left Kick Panel
IG	42	Cowl Side Panel RH
BI	46	Left Side of Rear Pillar
BJ	46	Right Side of Rear Pillar

RADIO AND PLAYER

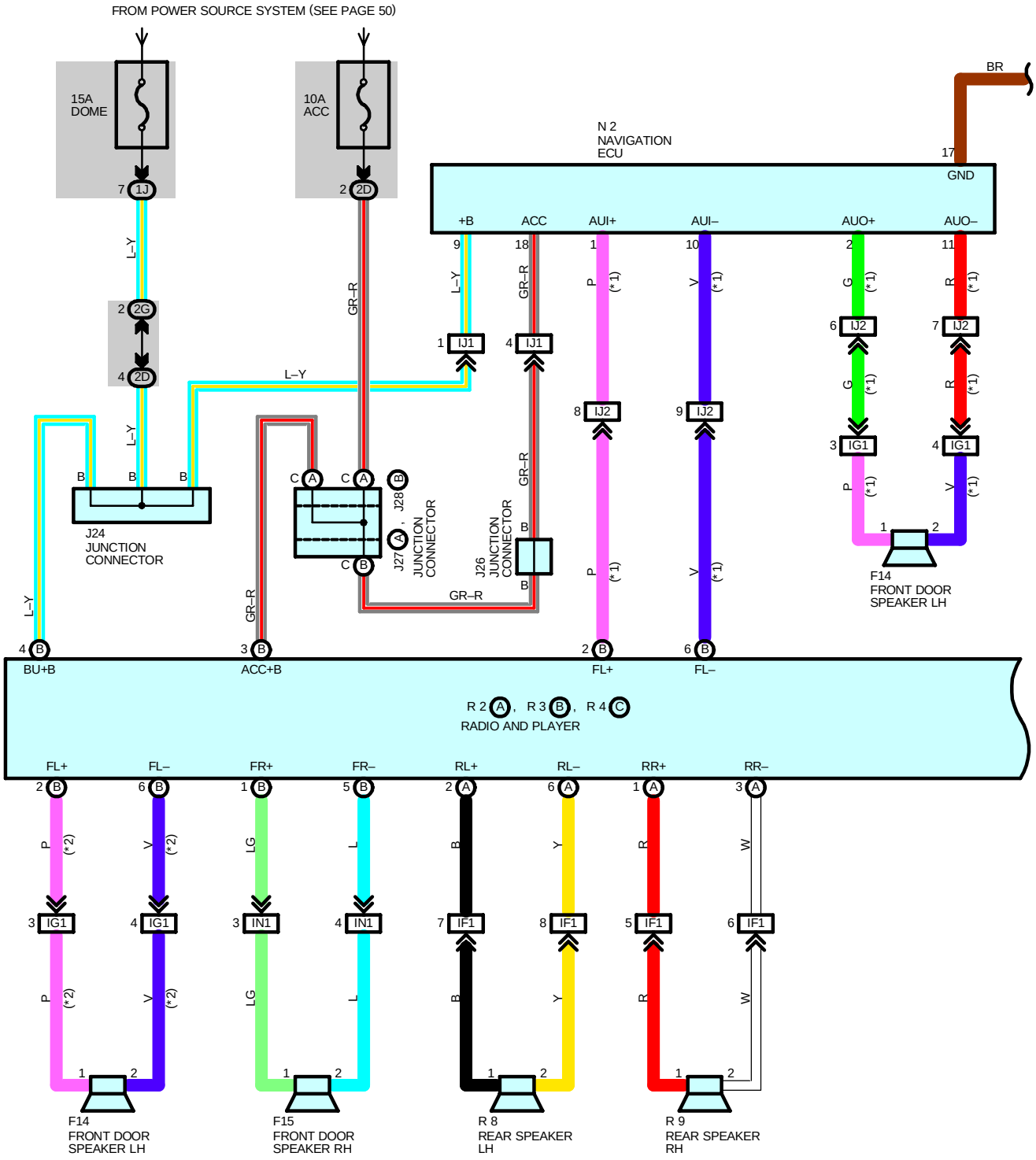

* 1 : W/ NAVIGATION SYSTEM
* 2 : W/O NAVIGATION SYSTEM

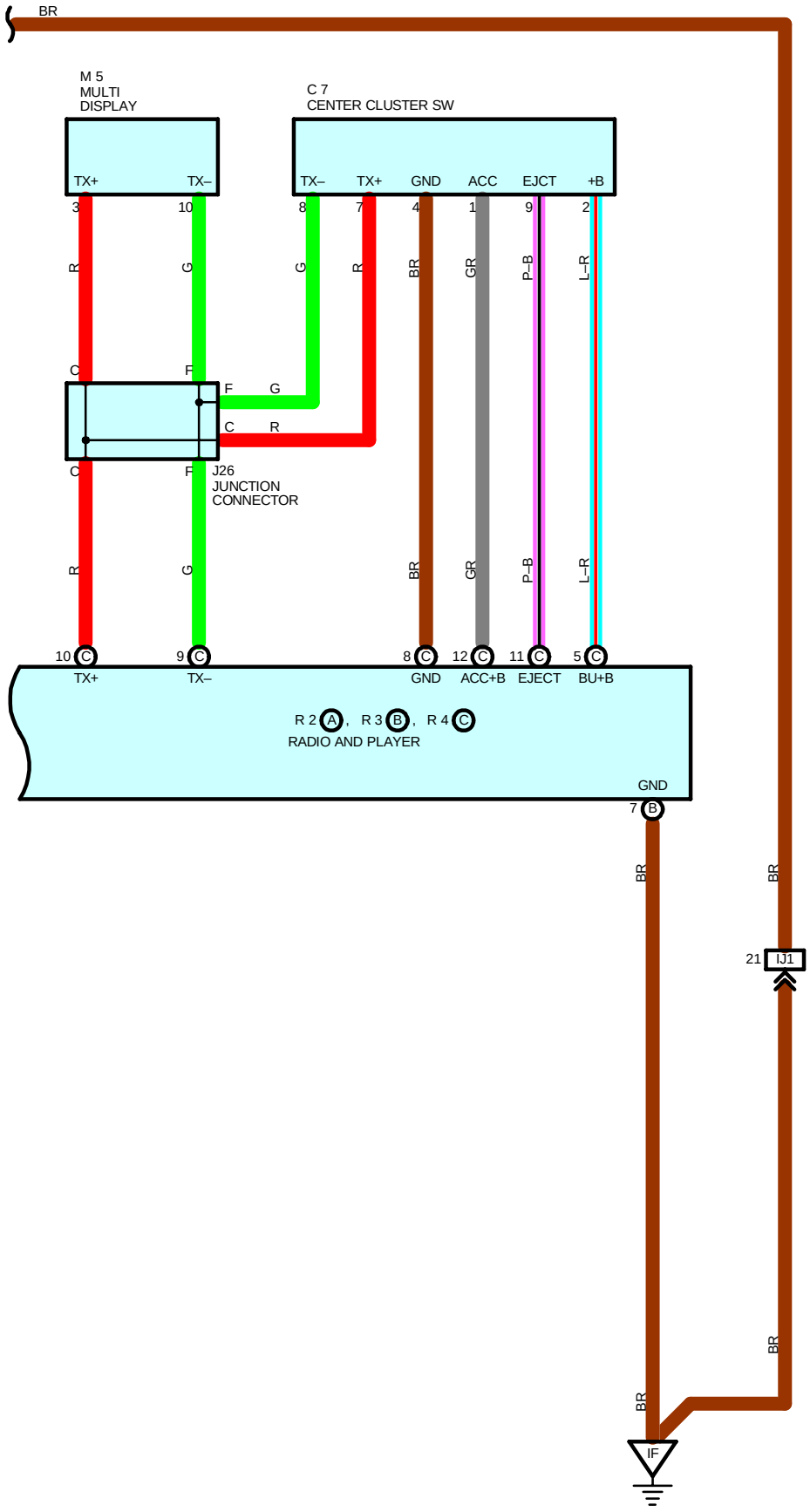

RADIO AND PLAYER

SERVICE HINTS

R3 (B) RADIO AND PLAYER

(B)4–GROUND : Always approx. **12** volts
(B)3–GROUND : Approx. **12** volts with the ignition SW at **ON** or **ACC** position
(B)7–GROUND : Always continuity

N2 NAVIGATION ECU

9–GROUND : Always approx. **12** volts
18–GROUND : Approx. **12** volts with the ignition SW at **ON** or **ACC** position
17–GROUND : Always continuity

: PARTS LOCATION

Code	See Page	Code	See Page	Code	See Page
C7	36	J27 A	37	R3 B	37
F14	38	J28 B	37	R4 C	37
F15	38	M5	37	R8	39
J24	37	N2	39	R9	39
J26	37	R2 A	37		

: JUNCTION BLOCK AND WIRE HARNESS CONNECTOR

Code	See Page	Junction Block and Wire Harness (Connector Location)
1J	27	Engine Room Main Wire and Engine Room J/B (Engine Compartment Left)
2D	30	Instrument Panel Wire and Instrument Panel J/B (Cowl Side Panel LH)
2G	31	Engine Room Main Wire and Instrument Panel J/B (Cowl Side Panel LH)

: CONNECTOR JOINING WIRE HARNESS AND WIRE HARNESS

Code	See Page	Joining Wire Harness and Wire Harness (Connector Location)
IF1	42	Instrument Panel Wire and Floor Wire (Left Kick Panel)
IG1	42	Front Door LH Wire and Instrument Panel Wire (Left Kick Panel)
IJ1	44	Floor No.3 Wire and Instrument Panel Wire (Under the Instrument Panel Center)
IJ2		
IN1	44	Front Door RH Wire and Instrument Panel Wire (Right Kick Panel)

: GROUND POINTS

Code	See Page	Ground Points Location
IF	42	Left Kick Panel

NAVIGATION SYSTEM

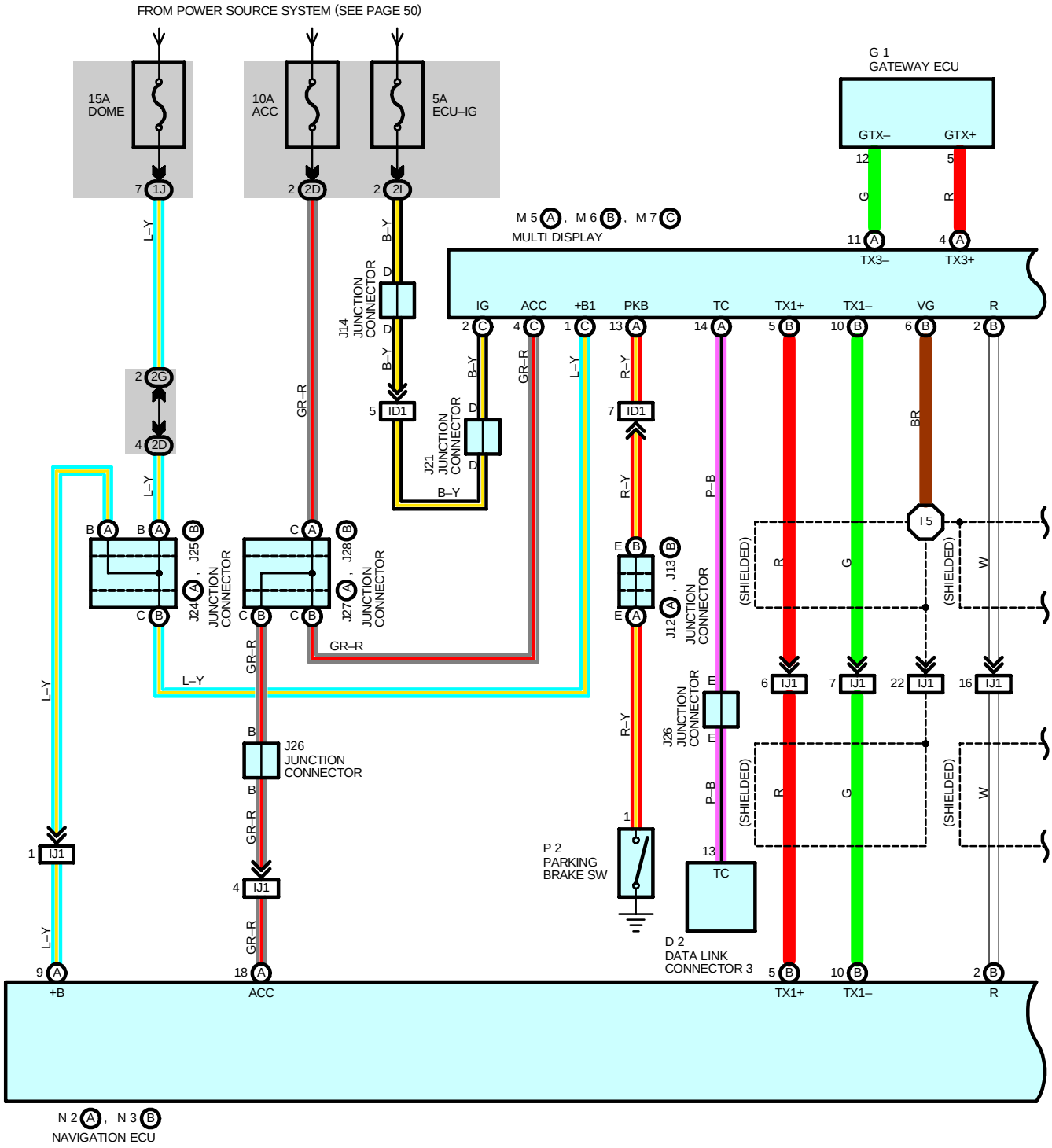

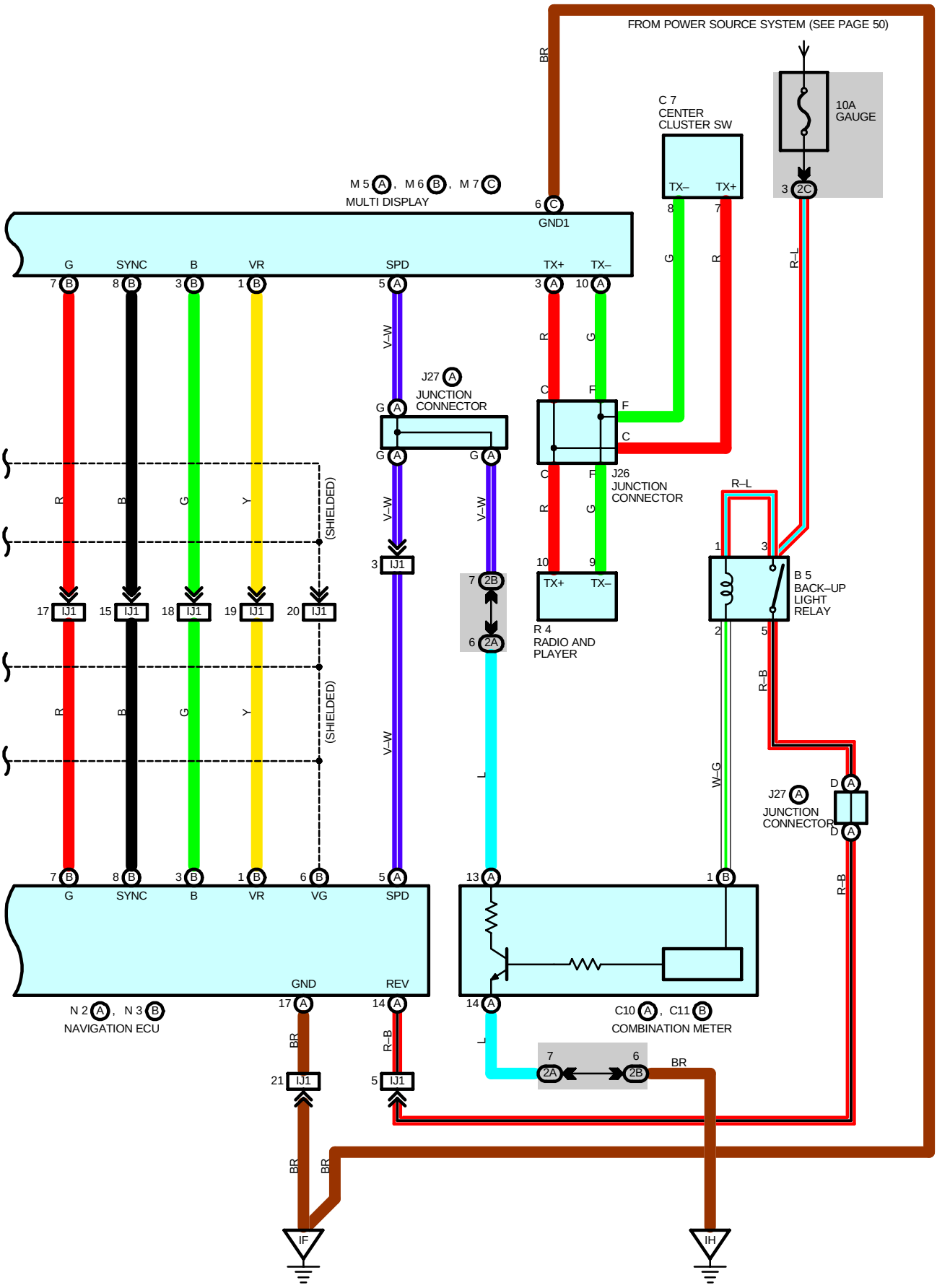
FROM POWER SOURCE SYSTEM (SEE PAGE 50)
BR
C 7
CENTER
CLUSTER SW
TX–
TX+
10A
GAUGE
3 2C
M 5 A , M 6 B , M 7 C
MULTI DISPLAY
6 C
GND1
G
SYNC
B
VR
SPD
TX+
TX–
7 B
8 B
3 B
1 B
5 A
3 A
10 A
8
7
G
R
R–L
V–W
R
G
J27 A
JUNCTION
CONNECTOR
G A
C
F
F
C
J26
JUNCTION
CONNECTOR
R–L
(SHIELDED)
3 IJ1
17 IJ1
15 IJ1
18 IJ1
19 IJ1
20 IJ1
7 2B
6 2A
10
9
TX+
TX–
R 4
RADIO AND
PLAYER
1
3
B 5
BACK–UP
LIGHT
RELAY
2
5
R–B
W–G
L
J27 A
JUNCTION
CONNECTOR
D A
D A
R–B
7 B
8 B
3 B
1 B
6 B
5 A
G
SYNC
B
VR
VG
SPD
13 A
1 B
GND
REV
17 A
14 A
14 A
N 2 A , N 3 B
NAVIGATION ECU
C10 A , C11 B
COMBINATION METER
BR
R–B
L
7
6
2A
2B
BR
21 IJ1
5 IJ1
BR
BR
IF
IH

NAVIGATION SYSTEM

SERVICE HINTS

N2 (A) NAVIGATION ECU

(A) 9–GROUND : Always approx. **12** volts
(A)18–GROUND : Approx. **12** volts with the ignition SW at **ON** or **ACC** position
(A)17–GROUND : Always continuity

M7 (C) MULTI DISPLAY

(C)2–GROUND : Approx. **12** volts with the ignition SW at **ON** position
(C)4–GROUND : Approx. **12** volts with the ignition SW at **ON** or **ACC** position
(C)6–GROUND : Always continuity

: PARTS LOCATION

Code		See Page	Code		See Page	Code		See Page
B5		36	J14		37	M6	B	37
C7		36	J21		37	M7	C	37
C10	A	36	J24	A	37	N2	A	39
C11	B	36	J25	B	37	N3	B	39
D2		36	J26		37	P2		37
G1		37	J27	A	37	R4		37
J12	A	37	J28	B	37			
J13	B	37	M5	A	37			

: JUNCTION BLOCK AND WIRE HARNESS CONNECTOR

Code	See Page	Junction Block and Wire Harness (Connector Location)
1J	27	Engine Room Main Wire and Engine Room J/B (Engine Compartment Left)
2A	30	Instrument Panel Wire and Instrument Panel J/B (Cowl Side Panel LH)
2B		
2C		
2D		
2G	31	Engine Room Main Wire and Instrument Panel J/B (Cowl Side Panel LH)
2I	31	Cowl Wire and Instrument Panel J/B (Cowl Side Panel LH)

: CONNECTOR JOINING WIRE HARNESS AND WIRE HARNESS

Code	See Page	Joining Wire Harness and Wire Harness (Connector Location)
ID1	42	Instrument Panel Wire and Cowl Wire (Left Kick Panel)
IJ1	44	Floor No.3 Wire and Instrument Panel Wire (Under the Instrument Panel Center)

: GROUND POINTS

Code	See Page	Ground Points Location
IF	42	Left Kick Panel
IH	42	Right Kick Panel

: SPLICE POINTS

Code	See Page	Wire Harness with Splice Points	Code	See Page	Wire Harness with Splice Points
I5	44	Instrument Panel Wire			

GATEWAY SYSTEM

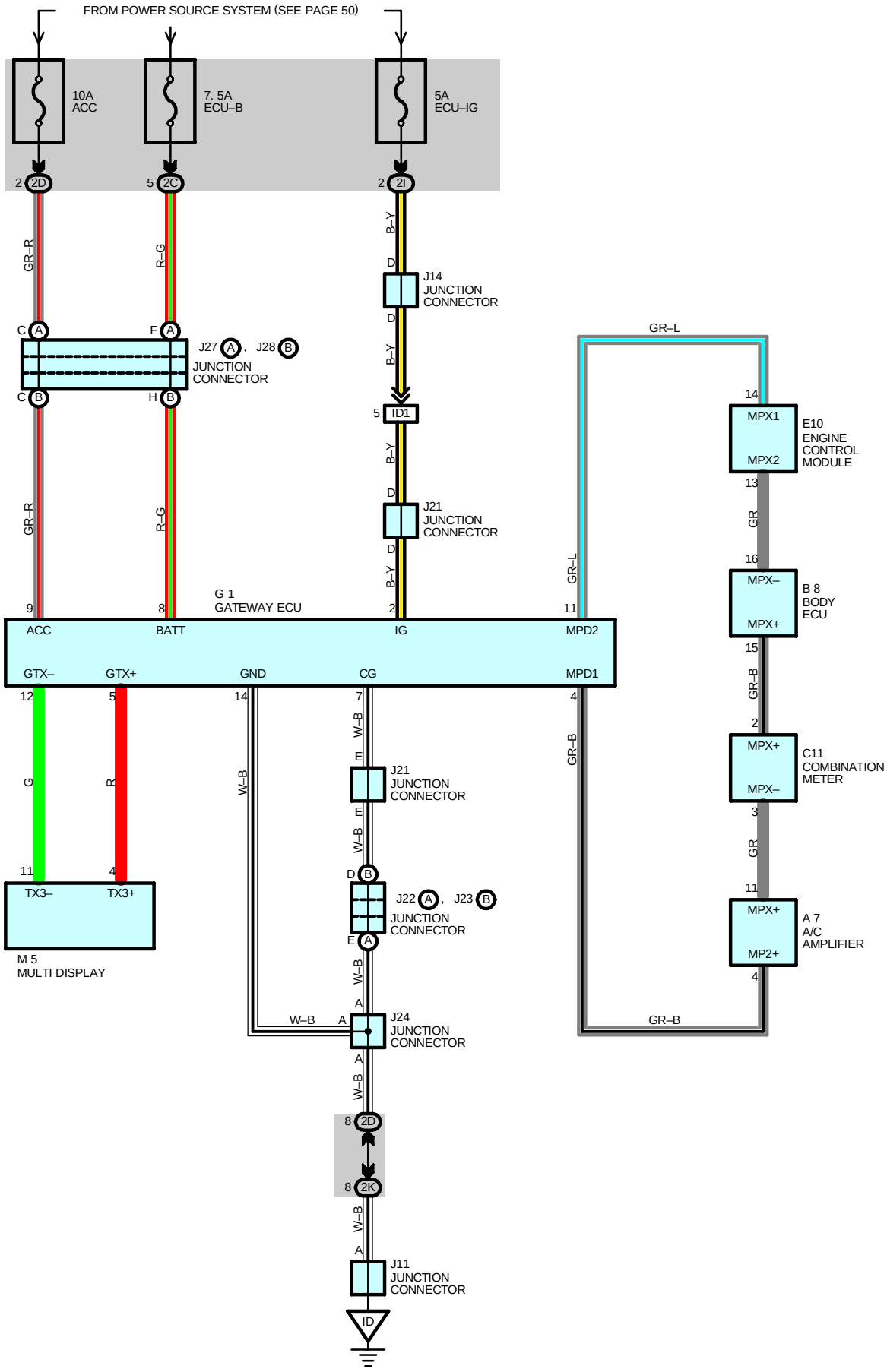

SERVICE HINTS

G1 GATEWAY ECU

8–GROUND : Always approx. **12** volts
2–GROUND : Approx. **12** volts with the ignition SW at **ON** position
9–GROUND : Approx. **12** volts with the ignition SW at **ACC** or **ON** position
7, 14–GROUND : Always continuity

: PARTS LOCATION

Code	See Page	Code		See Page	Code		See Page
A7	36	J11		37	J24		37
B8	36	J14		37	J27	A	37
C11	36	J21		37	J28	B	37
E10	36	J22	A	37	M5		37
G1	37	J23	B	37			

: JUNCTION BLOCK AND WIRE HARNESS CONNECTOR

Code	See Page	Junction Block and Wire Harness (Connector Location)
2C	30	Instrument Panel Wire and Instrument Panel J/B (Cowl Side Panel LH)
2D		
2I	31	Cowl Wire and Instrument Panel J/B (Cowl Side Panel LH)
2K		

: CONNECTOR JOINING WIRE HARNESS AND WIRE HARNESS

Code	See Page	Joining Wire Harness and Wire Harness (Connector Location)
ID1	42	Instrument Panel Wire and Cowl Wire (Left Kick Panel)

: GROUND POINTS

Code	See Page	Ground Points Location
ID	42	Cowl Side Panel LH

ELECTRIC TENSION REDUCER

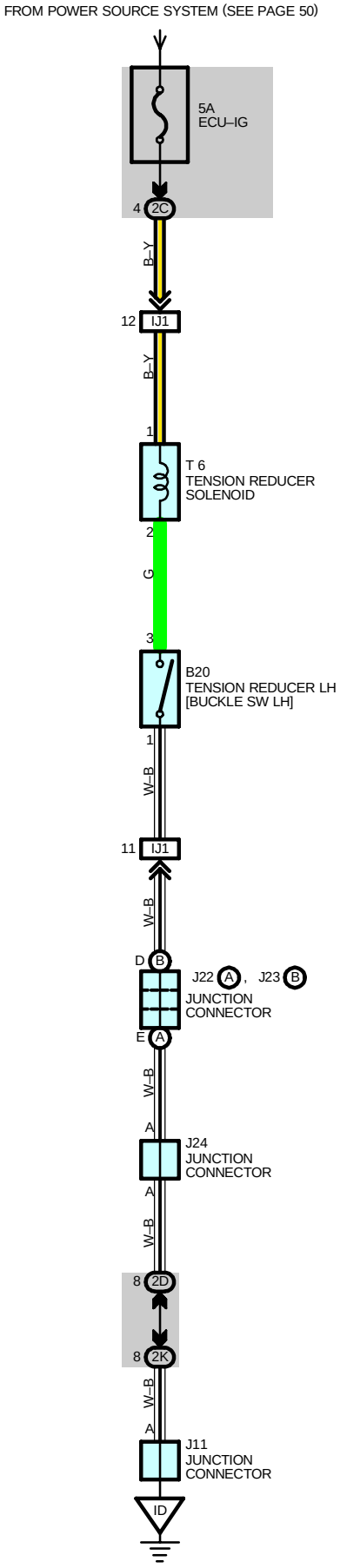

SERVICE HINTS

T6 TENSION REDUCER SOLENOID

1–GROUND : Approx. **12** volts with the ignition SW at **ON** position

B20 TENSION REDUCER LH

1–2 : Closed with driver's seat belt in use

: PARTS LOCATION

Code	See Page	Code		See Page	Code	See Page
B20	38	J22	A	37	J24	37
J11	37	J23	B	37	T6	39

: JUNCTION BLOCK AND WIRE HARNESS CONNECTOR

Code	See Page	Junction Block and Wire Harness (Connector Location)
2C	30	Instrument Panel Wire and Instrument Panel J/B (Cowl Side Panel LH)
2D		
2K	31	Cowl Wire and Instrument Panel J/B (Cowl Side Panel LH)

: CONNECTOR JOINING WIRE HARNESS AND WIRE HARNESS

Code	See Page	Joining Wire Harness and Wire Harness (Connector Location)
IJ1	44	Floor No.3 Wire and Instrument Panel Wire (Under the Instrument Panel Center)

: GROUND POINTS

Code	See Page	Ground Points Location
ID	42	Cowl Side Panel LH

EMPS

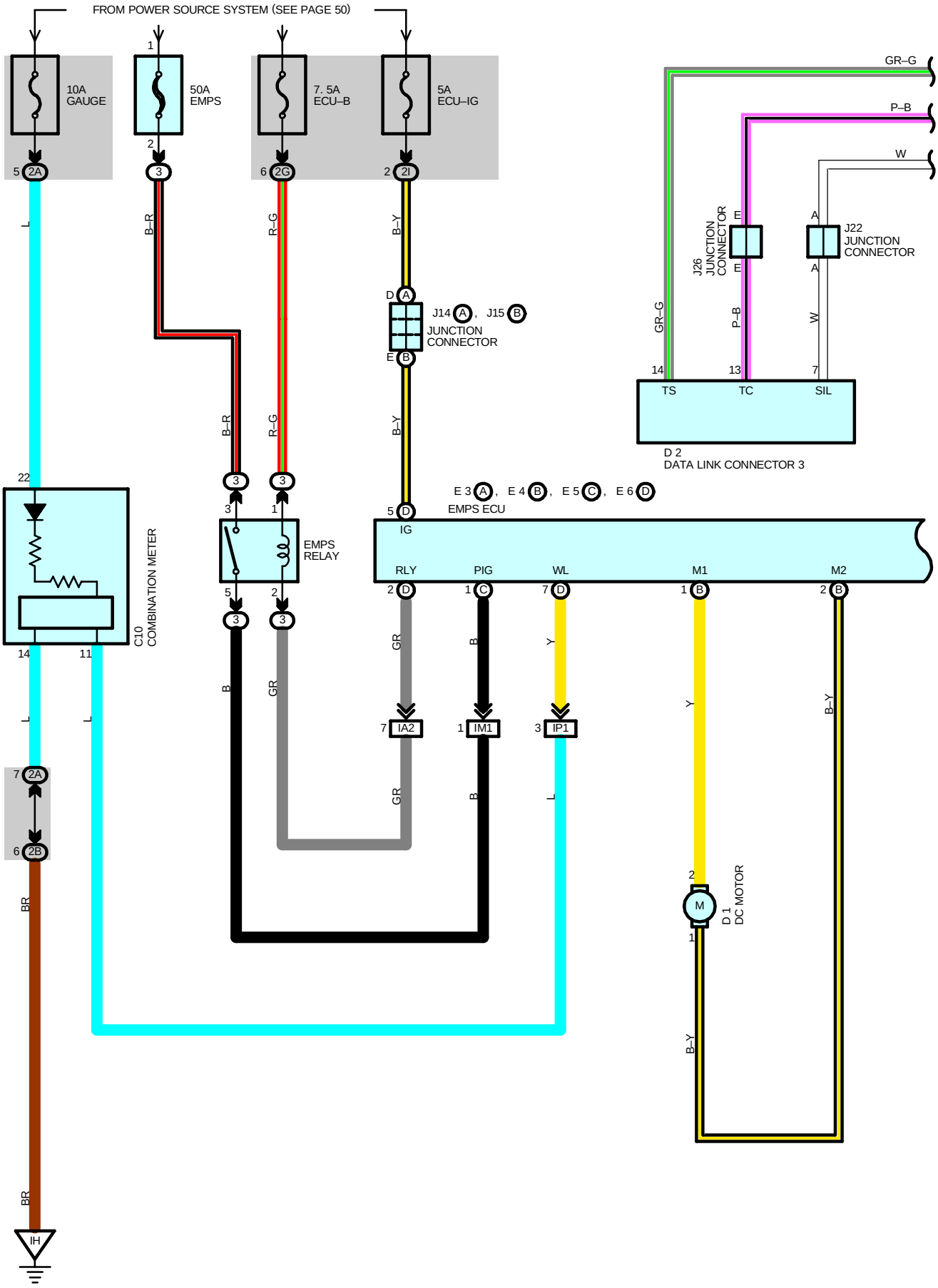
FROM POWER SOURCE SYSTEM (SEE PAGE 50)
10A GAUGE
50A EMPS
7. 5A ECU–B
5A ECU–IG
GR–G
P–B
W
J26 JUNCTION CONNECTOR
J22 JUNCTION CONNECTOR
J14 , J15
JUNCTION CONNECTOR
TS
TC
SIL
D 2
DATA LINK CONNECTOR 3
E 3 , E 4 , E 5 , E 6
EMPS ECU
IG
RLY
PIG
WL
M1
M2
EMPS RELAY
C10 COMBINATION METER
IA2
IM1
IP1
D 1
DC MOTOR
M
IH
L
B–R
R–G
B–Y
B
GR
Y
BR

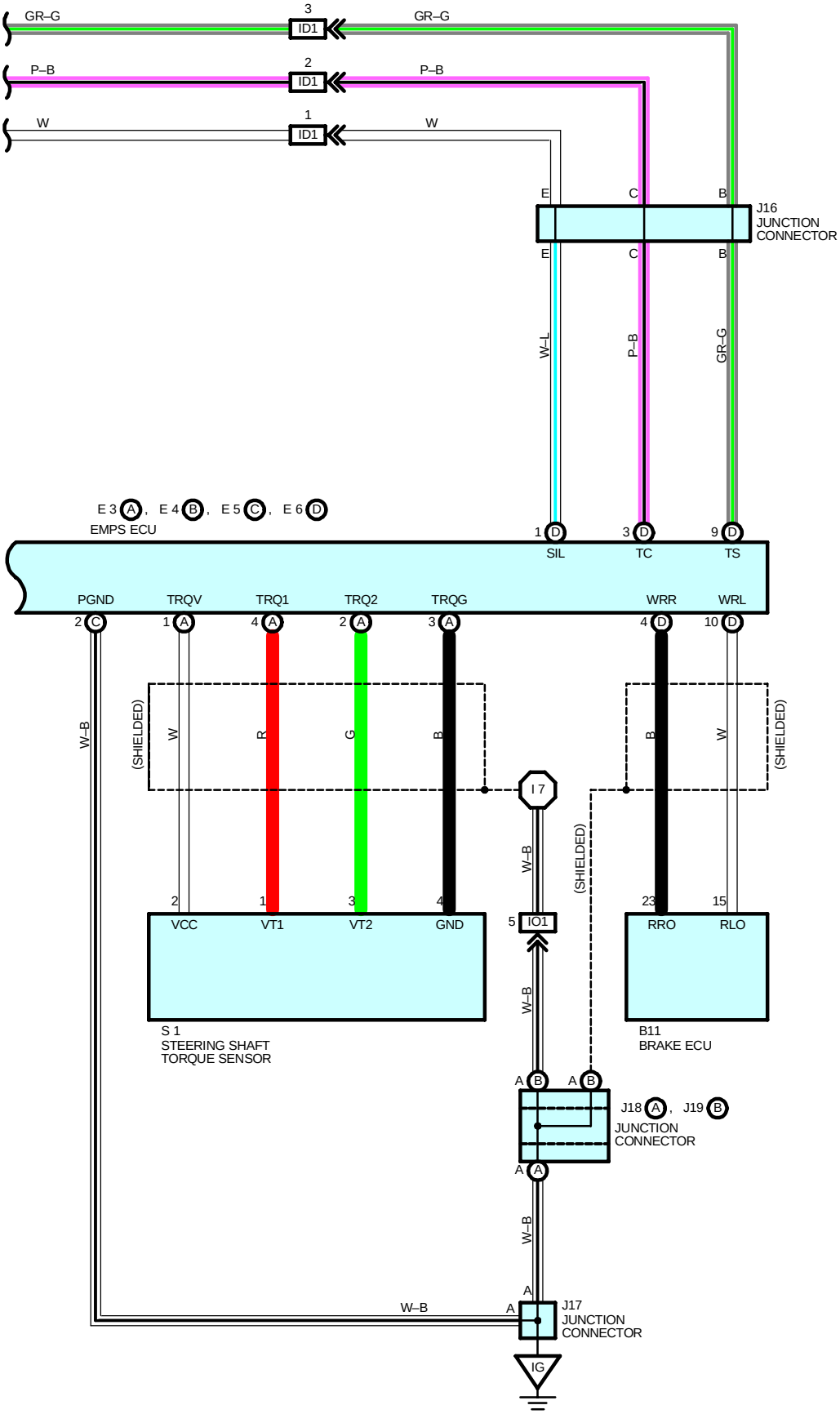
GR–G
3
ID1
GR–G
P–B
2
ID1
P–B
W
1
ID1
W
E
C
B
J16
JUNCTION
CONNECTOR
W–L
P–B
GR–G
E 3 A , E 4 B , E 5 C , E 6 D
EMPS ECU
1 D
SIL
3 D
TC
9 D
TS
PGND
TRQV
TRQ1
TRQ2
TRQG
WRR
WRL
2 C
1 A
4 A
2 A
3 A
4 D
10 D
W–B
(SHIELDED)
W
R
G
B
B
W
(SHIELDED)
I 7
W–B
(SHIELDED)
2
1
3
4
23
15
5 IO1
VCC
VT1
VT2
GND
RRO
RLO
S 1
STEERING SHAFT
TORQUE SENSOR
B11
BRAKE ECU
W–B
A B
A B
J18 A , J19 B
JUNCTION
CONNECTOR
A A
W–B
A
W–B
A
J17
JUNCTION
CONNECTOR
IG

EMPS

SYSTEM OUTLINE

In this system, the controller determines the direction and the amount of the assistant force based on the signals from the vehicle speed sensor and the torque sensor that is built in the gear box. The controller then assists the operation of the steering wheel by controlling the DC motor installed in the steering gear box.

SERVICE HINTS

E5 (C), E6 (D) EMPS ECU

(D) 5–GROUND : Approx. **12** volts with the ignition SW at **ON** position
(C) 2–GROUND : Always continuity

: PARTS LOCATION

Code		See Page	Code		See Page	Code		See Page
B11		36	E5	C	36	J18	A	37
C10		36	E6	D	36	J19	B	37
D1		34	J14	A	37	J22		37
D2		36	J15	B	37	J26		37
E3	A	36	J16		37	S1		35
E4	B	36	J17		37			

: RELAY BLOCKS

Code	See Page	Relay Blocks (Relay Block Location)
3	24	Engine Room R/B No.3 (Engine Compartment Right)

: JUNCTION BLOCK AND WIRE HARNESS CONNECTOR

Code	See Page	Junction Block and Wire Harness (Connector Location)
2A	30	Instrument Panel Wire and Instrument Panel J/B (Cowl Side Panel LH)
2B		
2G	31	Engine Room Main Wire and Instrument Panel J/B (Cowl Side Panel LH)
2I	31	Cowl Wire and Instrument Panel J/B (Cowl Side Panel LH)

: CONNECTOR JOINING WIRE HARNESS AND WIRE HARNESS

Code	See Page	Joining Wire Harness and Wire Harness (Connector Location)
IA2	42	Engine Room Main Wire and Cowl Wire (Cowl Side Panel LH)
ID1	42	Instrument Panel Wire and Cowl Wire (Left Kick Panel)
IM1	44	Engine Room Main Wire and Cowl Wire (Right Kick Panel)
IO1	44	Engine Wire and Cowl Wire (Right Kick Panel)
IP1	44	Instrument Panel Wire and Cowl Wire (Right Kick Panel)

: GROUND POINTS

Code	See Page	Ground Points Location
IG	42	Cowl Side Panel RH
IH	42	Right Kick Panel

: SPLICE POINTS

Code	See Page	Wire Harness with Splice Points	Code	See Page	Wire Harness with Splice Points
I7	44	Engine Wire			

NOTICE: When inspecting or repairing the SRS, perform the operation in accordance with the following precautionary instructions and the procedure and precautions in the Repair Manual for the applicable model year.

- Malfunction symptoms of the SRS are difficult to confirm, so the DTCs become the most important source of information when troubleshooting. When troubleshooting the SRS, always inspect the DTCs before disconnecting the battery.
- **Work must be started after 90 seconds from when the ignition switch is turned to the "LOCK" position and the negative (–) terminal cable is disconnected from the battery.**
  (The SRS is equipped with a back–up power source so that if work is started within 90 seconds from disconnecting the negative (–) terminal cable of the battery, the SRS may be deployed.)
- When the negative (–) terminal cable is disconnected from the battery, the memory of the clock and audio system will be canceled. So before starting work, make a record of the contents memorized in the audio memory system. When work is finished, reset the audio systems as they were before and adjust the clock. To avoid erasing the memory in each memory system, never use a back–up power supply from outside the vehicle.
- Before repairs, remove the airbag sensor if shocks are likely to be applied to the sensor during repairs.
- Do not expose the steering wheel pad, front passenger airbag assembly, side airbag assembly, seat belt pretensioner, airbag sensor assembly or side airbag sensor directly to hot air or flames.
- Even in cases of a minor collision where the SRS does not deploy, the steering wheel pad, front passenger airbag assembly, side airbag assembly, seat belt pretensioner, airbag sensor assembly and side airbag sensor assembly should be inspected.
- Never use SRS parts from another vehicle. When replacing parts, replace them with new parts.
- Never disassemble and repair the steering wheel pad, front passenger airbag assembly, side airbag assembly, seat belt pretensioner, airbag sensor assembly or side airbag sensor assembly in order to reuse it.
- If the steering wheel pad, front passenger airbag assembly, side airbag assembly, seat belt pretensioner, airbag sensor assembly or side airbag sensor assembly has been dropped, or if there are cracks, dents or other defects in the case, bracket or connector, replace them with new ones.
- Use a volt/ohmmeter with high impedance (10 kΩ/V minimum) for troubleshooting the system's electrical circuits.
- Information labels are attached to the periphery of the SRS components. Follow the instructions on the notices.
- After work on the SRS is completed, perform the SRS warning light check.
- If the vehicle is equipped with a mobile communication system, refer to the precaution in the IN section of the Repair Manual.

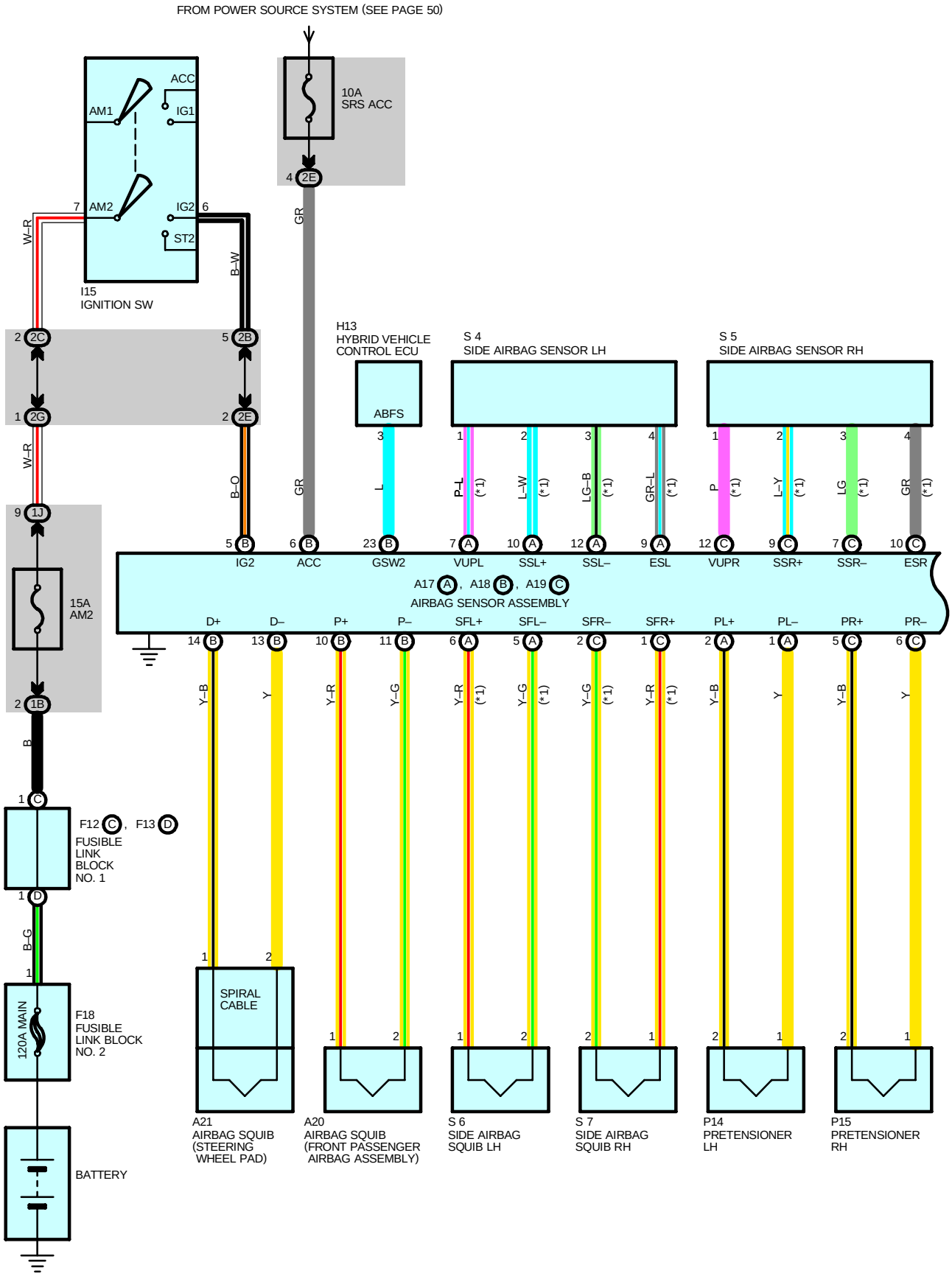
FROM POWER SOURCE SYSTEM (SEE PAGE 50)
10A
SRS ACC
4 2E
GR
ACC
AM1
IG1
AM2
IG2
ST2
7
6
W–R
B–W
I15
IGNITION SW
2 2C
5 2B
1 2G
2 2E
W–R
B–O
9 1J
15A
AM2
2 1B
B
1 C
F12 C , F13 D
FUSIBLE
LINK
BLOCK
NO. 1
1 D
B–G
1
120A MAIN
F18
FUSIBLE
LINK BLOCK
NO. 2
BATTERY
H13
HYBRID VEHICLE
CONTROL ECU
ABFS
3
L
23 B
GSW2
S 4
SIDE AIRBAG SENSOR LH
1
P–L
(*1)
7 A
VUPL
2
L–W
(*1)
10 A
SSL+
3
LG–B
(*1)
12 A
SSL–
4
GR–L
(*1)
9 A
ESL
S 5
SIDE AIRBAG SENSOR RH
1
P
(*1)
12 C
VUPR
2
L–Y
(*1)
9 C
SSR+
3
LG
(*1)
7 C
SSR–
4
GR
(*1)
10 C
ESR
5 B
IG2
6 B
ACC
A17 A , A18 B , A19 C
AIRBAG SENSOR ASSEMBLY
D+
D–
P+
P–
SFL+
SFL–
SFR–
SFR+
PL+
PL–
PR+
PR–
14 B
13 B
10 B
11 B
6 A
5 A
2 C
1 C
2 A
1 A
5 C
6 C
Y–B
Y
Y–R
Y–G
(*1)
SPIRAL
CABLE
A21
AIRBAG SQUIB
(STEERING
WHEEL PAD)
A20
AIRBAG SQUIB
(FRONT PASSENGER
AIRBAG ASSEMBLY)
S 6
SIDE AIRBAG
SQUIB LH
S 7
SIDE AIRBAG
SQUIB RH
P14
PRETENSIONER
LH
P15
PRETENSIONER
RH

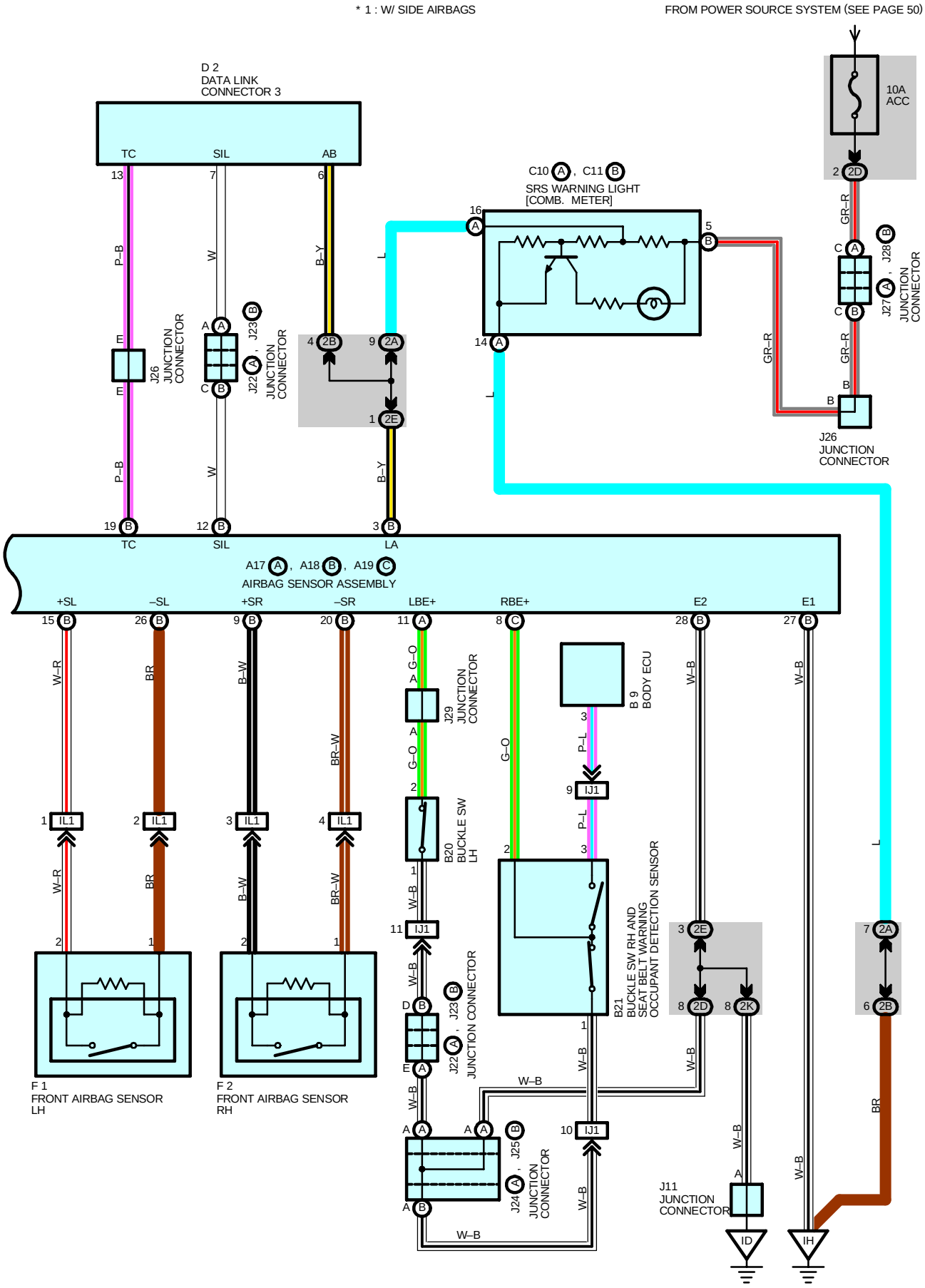
* 1 : W/ SIDE AIRBAGS
FROM POWER SOURCE SYSTEM (SEE PAGE 50)
D 2
DATA LINK
CONNECTOR 3
TC
SIL
AB
10A
ACC
C10 A , C11 B
SRS WARNING LIGHT
[COMB. METER]
J26
JUNCTION
CONNECTOR
J23 , J22
JUNCTION
CONNECTOR
J27 , J28
JUNCTION
CONNECTOR
A17 A , A18 B , A19 C
AIRBAG SENSOR ASSEMBLY
+SL
–SL
+SR
–SR
LBE+
RBE+
E2
E1
J29
JUNCTION
CONNECTOR
B 9
BODY ECU
B20
BUCKLE SW
LH
B21
BUCKLE SW RH AND
SEAT BELT WARNING
OCCUPANT DETECTION SENSOR
J25 , J24
JUNCTION
CONNECTOR
J11
JUNCTION
CONNECTOR
F 1
FRONT AIRBAG SENSOR
LH
F 2
FRONT AIRBAG SENSOR
RH
ID
IH

SRS

SYSTEM OUTLINE

The SRS is a driver and front passenger protection device which has a supplemental role to the seat belts.
When the ignition SW is turned to ACC or ON, current from the SRS ACC fuse flows to TERMINAL (B) 6 of the airbag sensor assembly. Only when the ignition SW is on does the current flow TERMINAL (B) 5 of the airbag sensor assembly.
If an accident occurs while driving, when the frontal impact exceeds a set level, current flows to TERMINALS (B) 14, (B) 10, (A) 2 and (C) 5 of the airbag sensor assembly to TERMINAL 1 of the airbag squibs and the pretensioners to TERMINAL 2 to TERMINALS (B) 13, (B) 11, (A) 1 and (C) 6 of the airbag sensor assembly to TERMINAL (B) 27, (B) 28 or BODY GROUND to GROUND, so that current flows to the front airbag squibs and the pretensioners and causes them to operate.
When the side impact also exceeds a set level, current from the ignition SW (IG2) or SRS ACC fuse flows to TERMINALS (A) 5, (C) 2, (A) 2 and (C) 5 of the airbag sensor assembly to TERMINAL 1 of the side airbag squibs and the pretensioners to TERMINAL 2 to TERMINALS (A) 6, (C) 1, (A) 1 and (C) 6 of the airbag sensor assembly to TERMINAL (B) 27, (B) 28 or BODY GROUND to GROUND, causing side airbag squibs and the pretensioners to operate.
The airbag stored inside the steering wheel pad is instantaneously expanded to soften the shock to the driver.
The airbag stored inside the passenger's instrument panel is instantaneously expanded to soften the shock to the front passenger.
Side airbags are instantaneously expanded to soften the shock of side to the driver and front passenger (w/ side airbags).
The pretensioners make sure of the seat belt restrainability.

○ : PARTS LOCATION

Code	See Page	Code	See Page	Code	See Page
A17 A	36	F1	34	J25 B	37
A18 B	36	F2	34	J26	37
A19 C	36	F12 C	34	J27 A	37
A20	36	F13 D	34	J28 B	37
A21	36	F18	38	J29	37
B9	36	H13	37	P14	39
B20	38	I15	37	P15	39
B21	38	J11	37	S4	39
C10 A	36	J22 A	37	S5	39
C11 B	36	J23 B	37	S6	39
D2	36	J24 A	37	S7	39

: JUNCTION BLOCK AND WIRE HARNESS CONNECTOR

Code	See Page	Junction Block and Wire Harness (Connector Location)
1B	27	Engine Room Main Wire and Engine Room J/B (Engine Compartment Left)
1J		
2A	30	Instrument Panel Wire and Instrument Panel J/B (Cowl Side Panel LH)
2B		
2C		
2D		
2E		
2G	31	Engine Room Main Wire and Instrument Panel J/B (Cowl Side Panel LH)
2K	31	Cowl Wire and Instrument Panel J/B (Cowl Side Panel LH)

: CONNECTOR JOINING WIRE HARNESS AND WIRE HARNESS

Code	See Page	Joining Wire Harness and Wire Harness (Connector Location)
IJ1	44	Floor No.3 Wire and Instrument Panel Wire (Under the Instrument Panel Center)
IL1	44	Instrument Panel Wire and Engine Room Main Wire (Right Kick Panel)

: GROUND POINTS

Code	See Page	Ground Points Location
ID	42	Cowl Side Panel LH
IH	42	Right Kick Panel

ABS

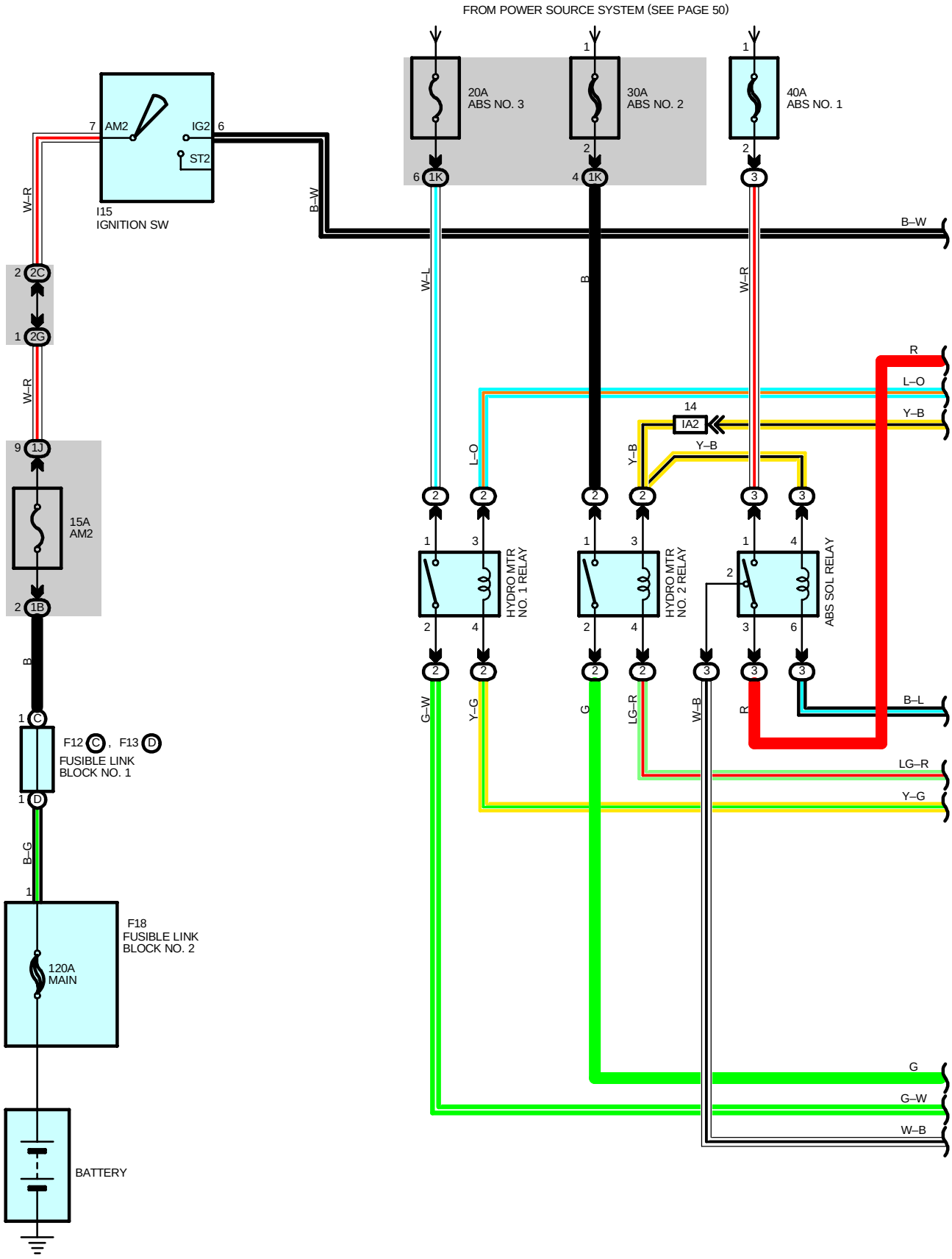
FROM POWER SOURCE SYSTEM (SEE PAGE 50)
20A
ABS NO. 3
30A
ABS NO. 2
40A
ABS NO. 1
AM2
IG2
ST2
I15
IGNITION SW
W–R
B–W
W–L
B
R
L–O
Y–B
IA2
14
2C
2G
1J
15A
AM2
1B
1C
F12 C , F13 D
FUSIBLE LINK
BLOCK NO. 1
1D
B–G
F18
FUSIBLE LINK
BLOCK NO. 2
120A
MAIN
BATTERY
1K
3
HYDRO MTR
NO. 1 RELAY
HYDRO MTR
NO. 2 RELAY
ABS SOL RELAY
G–W
Y–G
G
LG–R
W–B
B–L

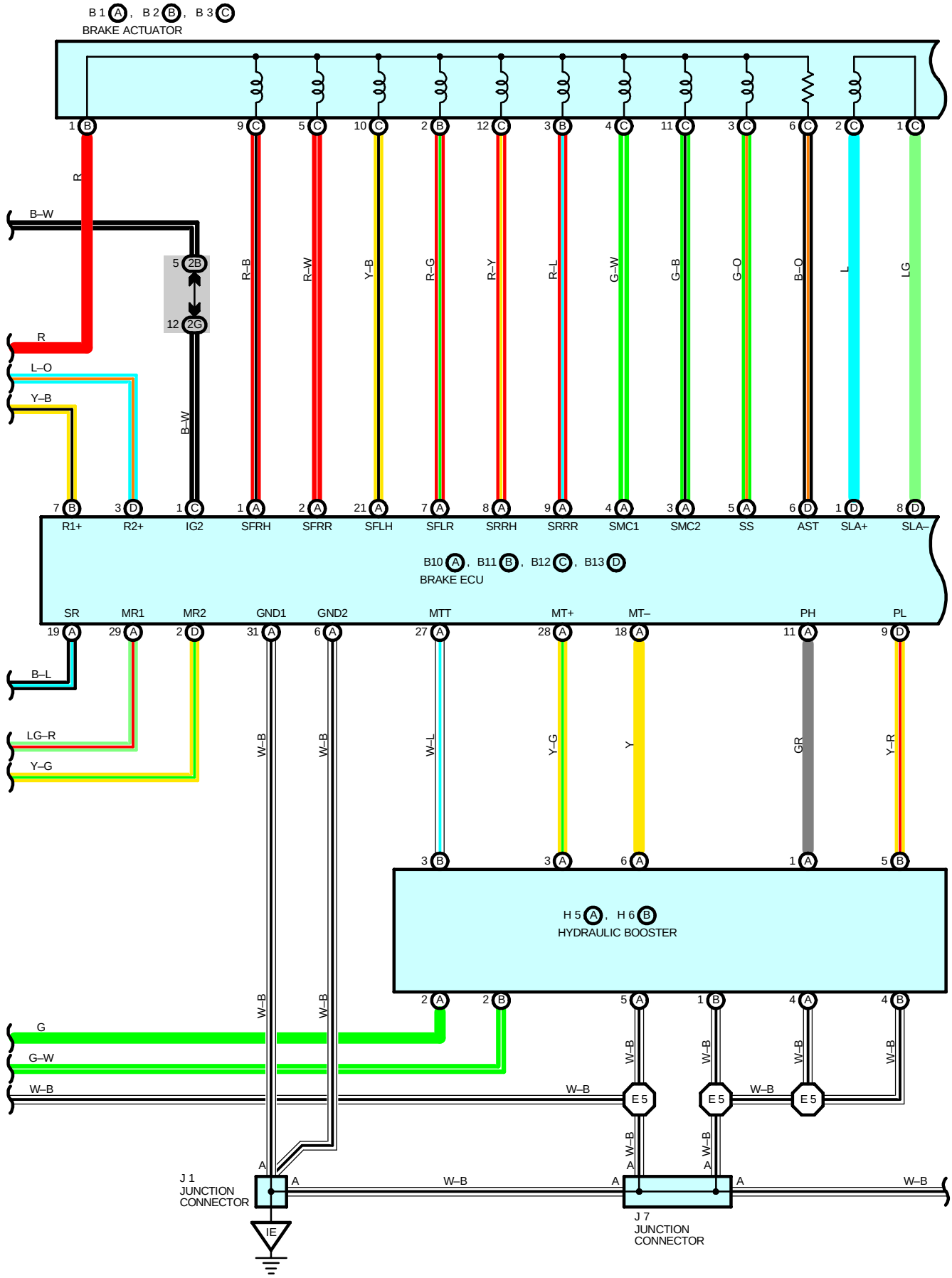
B 1 A , B 2 B , B 3 C
BRAKE ACTUATOR
1 B
9 C
5 C
10 C
2 B
12 C
3 B
4 C
11 C
3 C
6 C
2 C
1 C
R
B–W
5 2B
12 2G
R
L–O
Y–B
B–W
R–B
R–W
Y–B
R–G
R–Y
R–L
G–W
G–B
G–O
B–O
L
LG
7 B
3 D
1 C
1 A
2 A
21 A
7 A
8 A
9 A
4 A
3 A
5 A
6 D
1 D
8 D
R1+
R2+
IG2
SFRH
SFRR
SFLH
SFLR
SRRH
SRRR
SMC1
SMC2
SS
AST
SLA+
SLA–
B10 A , B11 B , B12 C , B13 D
BRAKE ECU
SR
MR1
MR2
GND1
GND2
MTT
MT+
MT–
PH
PL
19 A
29 A
2 D
31 A
6 A
27 A
28 A
18 A
11 A
9 D
B–L
LG–R
Y–G
W–B
W–B
W–L
Y–G
Y
GR
Y–R
3 B
3 A
6 A
1 A
5 B
H 5 A , H 6 B
HYDRAULIC BOOSTER
2 A
2 B
5 A
1 B
4 A
4 B
G
G–W
W–B
W–B
W–B
W–B
W–B
W–B
W–B
W–B
E 5
E 5
E 5
A
A
A
A
A
A
J 1
JUNCTION
CONNECTOR
IE
J 7
JUNCTION
CONNECTOR

ABS

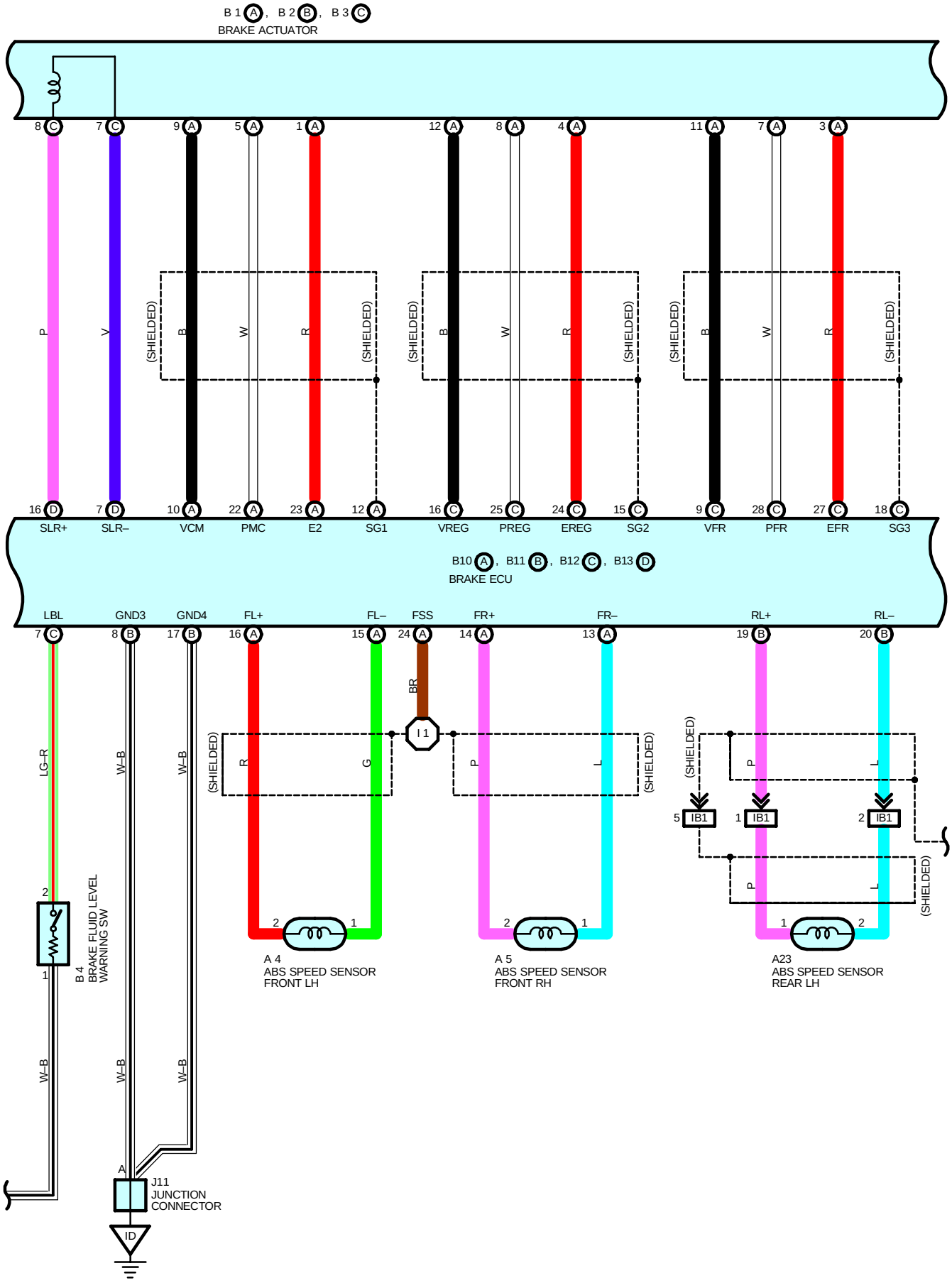
B 1 A , B 2 B , B 3 C
BRAKE ACTUATOR
8 C 7 C 9 A 5 A 1 A 12 A 8 A 4 A 11 A 7 A 3 A
P V B W R (SHIELDED) B W R (SHIELDED) B W R (SHIELDED)
16 D 7 D 10 A 22 A 23 A 12 A 16 C 25 C 24 C 15 C 9 C 28 C 27 C 18 C
SLR+ SLR– VCM PMC E2 SG1 VREG PREG EREG SG2 VFR PFR EFR SG3
B10 A , B11 B , B12 C , B13 D
BRAKE ECU
LBL GND3 GND4 FL+ FL– FSS FR+ FR– RL+ RL–
7 C 8 B 17 B 16 A 15 A 24 A 14 A 13 A 19 B 20 B
LG–R W–B W–B R G BR P L (SHIELDED) P L (SHIELDED)
I 1
5 IB1 1 IB1 2 IB1
2 1
B 4
BRAKE FLUID LEVEL
WARNING SW
W–B W–B W–B
A
J11
JUNCTION
CONNECTOR
ID
A 4
ABS SPEED SENSOR
FRONT LH
A 5
ABS SPEED SENSOR
FRONT RH
A23
ABS SPEED SENSOR
REAR LH

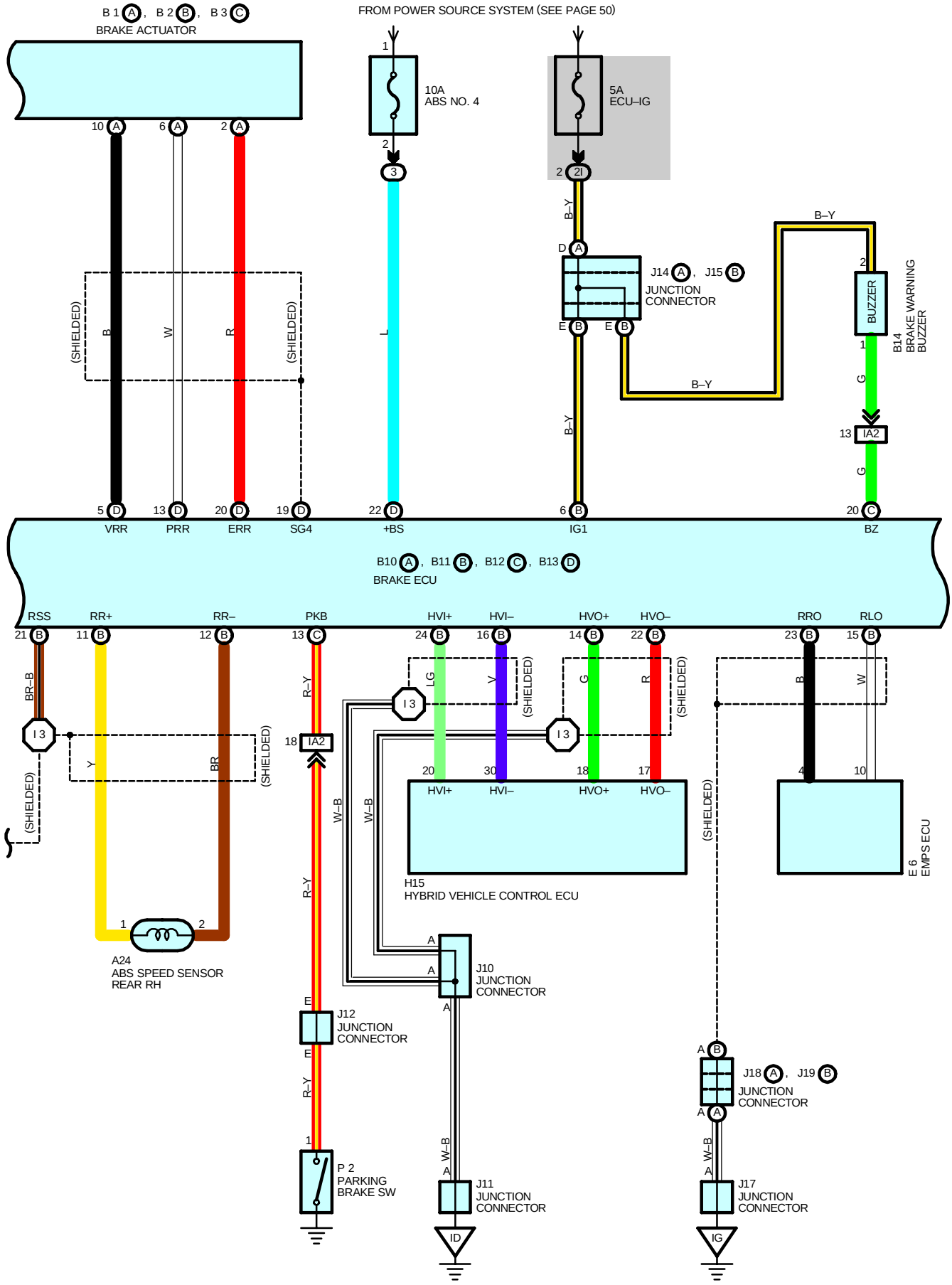
B 1 A , B 2 B , B 3 C
BRAKE ACTUATOR
FROM POWER SOURCE SYSTEM (SEE PAGE 50)
10A
ABS NO. 4
5A
ECU–IG
J14 A , J15 B
JUNCTION
CONNECTOR
BUZZER
B14
BRAKE WARNING
BUZZER
(SHIELDED)
B
W
R
L
B–Y
G
VRR
PRR
ERR
SG4
+BS
IG1
BZ
B10 A , B11 B , B12 C , B13 D
BRAKE ECU
RSS
RR+
RR–
PKB
HVI+
HVI–
HVO+
HVO–
RRO
RLO
BR–B
Y
BR
R–Y
LG
V
G
R
W–B
I 3
IA2
H15
HYBRID VEHICLE CONTROL ECU
E 6
EMPS ECU
A24
ABS SPEED SENSOR
REAR RH
J10
JUNCTION
CONNECTOR
J11
JUNCTION
CONNECTOR
J12
JUNCTION
CONNECTOR
J17
JUNCTION
CONNECTOR
J18 A , J19 B
JUNCTION
CONNECTOR
P 2
PARKING
BRAKE SW
ID
IG

ABS

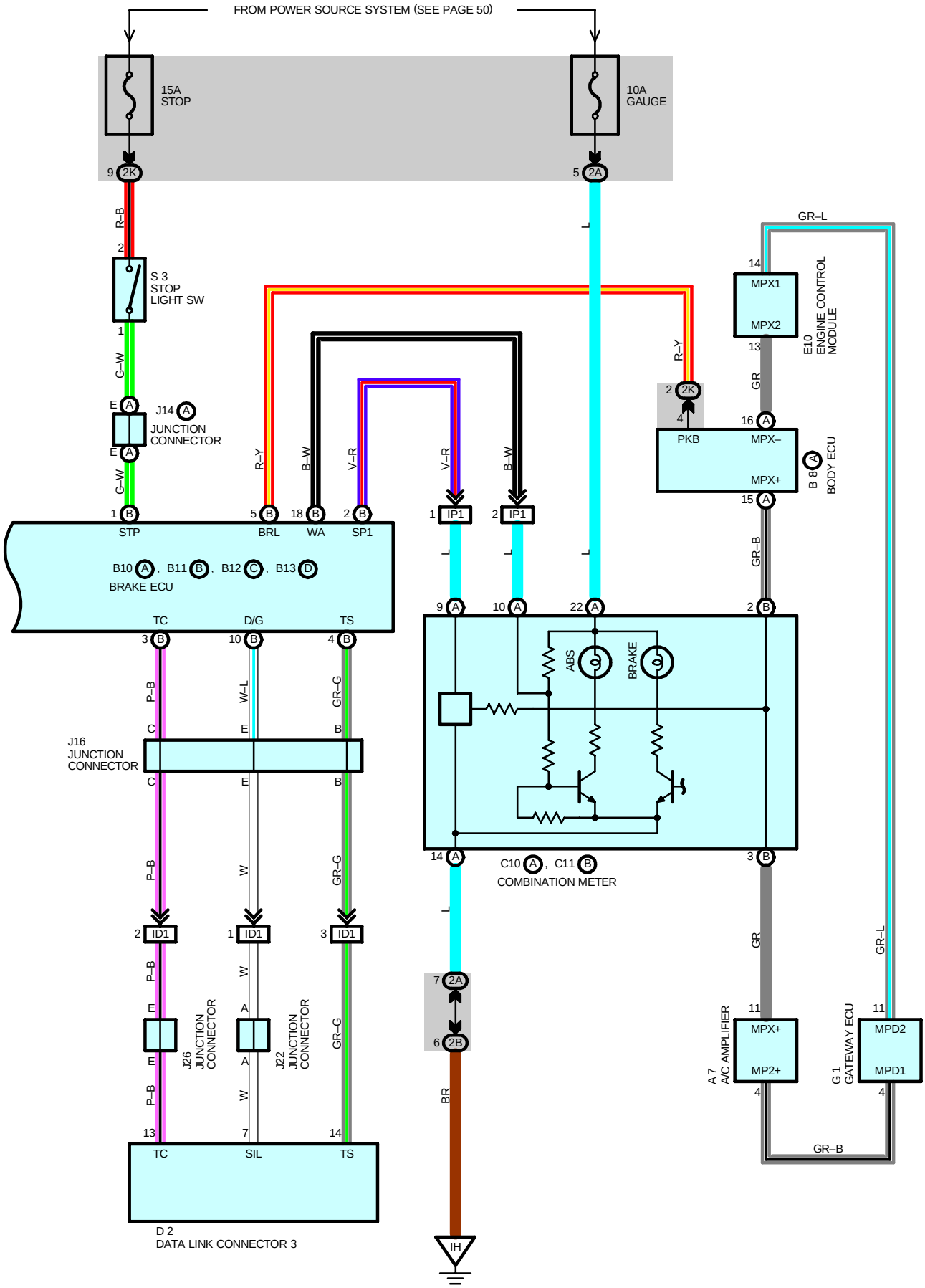
FROM POWER SOURCE SYSTEM (SEE PAGE 50)
15A
STOP
10A
GAUGE
9 2K
5 2A
R–B
2
S 3
STOP
LIGHT SW
1
G–W
E A J14 A
JUNCTION
CONNECTOR
E A
G–W
1 B
STP
R–Y
B–W
V–R
V–R
B–W
5 B
BRL
18 B
WA
2 B
SP1
1 IP1
2 IP1
L
L
L
B10 A , B11 B , B12 C , B13 D
BRAKE ECU
TC
D/G
TS
3 B
10 B
4 B
P–B
W–L
GR–G
C
E
B
J16
JUNCTION
CONNECTOR
C
E
B
P–B
W
GR–G
2 ID1
1 ID1
3 ID1
P–B
W
GR–G
E
A
E
A
P–B
W
J26
JUNCTION
CONNECTOR
J22
JUNCTION
CONNECTOR
13
7
14
TC
SIL
TS
D 2
DATA LINK CONNECTOR 3
9 A
10 A
22 A
14 A
3 B
ABS
BRAKE
C10 A , C11 B
COMBINATION METER
L
7 2A
6 2B
BR
IH
R–Y
2 2K
4
PKB
GR–L
14
MPX1
MPX2
13
E10
ENGINE CONTROL
MODULE
GR
16 A
MPX–
MPX+
B 8 A
BODY ECU
15 A
GR–B
2 B
GR
GR–L
11
MPX+
MP2+
4
A 7
A/C AMPLIFIER
11
MPD2
MPD1
4
G 1
GATEWAY ECU
GR–B

SYSTEM OUTLINE

1. INPUT SIGNALS

(1) Speed sensor signal

The speed of the wheels is detected and input to TERMINALS FL+, FR+, RL+ and RR+ of the brake ECU.

(2) Stop light SW signal

A signal is input to TERMINAL STP of the brake ECU when the brake pedal is depressed.

2. ABS SYSTEM OPERATION

During sudden braking the brake ECU has signals input from each sensor, which controls the current to the solenoid inside the actuator and lets the hydraulic pressure acting on each wheel cylinder escape to the reservoir. The pump inside the actuator is also operating at this time and it returns the brake fluid from the reservoir to the master cylinder, thus preventing locking of the vehicle wheels.

If the brake ECU judges that the hydraulic pressure acting on the wheel cylinder is insufficient, the current on the solenoid is controlled and the hydraulic pressure is increased. Holding of the hydraulic pressure is also controlled by the brake ECU, by the same method as above. Pressure reduction, holding and increase are repeated to maintain vehicle stability and to improve steerability during sudden braking.

SERVICE HINTS

A4, A5 ABS SPEED SENSOR FRONT LH, RH

2–1 : **1.4**–**1.8** kΩ (**20**°C, **68**°F)

A23, A24 ABS SPEED SENSOR REAR LH, RH

2–1 : **1.04**–**1.3** kΩ (**20**°C, **68**°F)

B10 (A), B11 (B), B12 (C), B13 (D) BRAKE ECU

(B) 6, (C) 1–GROUND : Approx. **12** volts with the ignition SW at **ON** position

(D) 22–GROUND : Always approx. **12** volts

(A) 6, (A)31–GROUND : Always continuity

○ : PARTS LOCATION

Code	See Page	Code	See Page	Code	See Page
A4	34	C10 A	36	J10	37
A5	34	C11 B	36	J11	37
A7	36	D2	36	J12	37
A23	38	E6	36	J14 A	37
A24	38	E10	36	J15 B	37
B1 A	34	F12 C	34	J16	37
B2 B	34	F13 D	34	J17	37
B3 C	34	F18	38	J18 A	37
B4	34	G1	37	J19 B	37
B8 A	36	H5 A	34	J22	37
B10 A	36	H6 B	34	J26	37
B11 B	36	H15	38	P2	37
B12 C	36	I15	37	S3	37
B13 D	36	J1	37		
B14	36	J7	37		

▭ : RELAY BLOCKS

Code	See Page	Relay Blocks (Relay Block Location)
2	23	Engine Room R/B No.2 (Right Side of Reserve Tank)
3	24	Engine Room R/B No.3 (Engine Compartment Right)

ABS



: JUNCTION BLOCK AND WIRE HARNESS CONNECTOR

Code	See Page	Junction Block and Wire Harness (Connector Location)
1B	27	Engine Room Main Wire and Engine Room J/B (Engine Compartment Left)
1J		
1K		
2A	30	Instrument Panel Wire and Instrument Panel J/B (Cowl Side Panel LH)
2B		
2C		
2G	31	Engine Room Main Wire and Instrument Panel J/B (Cowl Side Panel LH)
2I	31	Cowl Wire and Instrument Panel J/B (Cowl Side Panel LH)
2K		



: CONNECTOR JOINING WIRE HARNESS AND WIRE HARNESS

Code	See Page	Joining Wire Harness and Wire Harness (Connector Location)
IA2	42	Engine Room Main Wire and Cowl Wire (Cowl Side Panel LH)
IB1	42	Floor Wire and Cowl Wire (Cowl Side Panel LH)
ID1	42	Instrument Panel Wire and Cowl Wire (Left Kick Panel)
IP1	44	Instrument Panel Wire and Cowl Wire (Right Kick Panel)



: GROUND POINTS

Code	See Page	Ground Points Location
ID	42	Cowl Side Panel LH
IE		
IG	42	Cowl Side Panel RH
IH	42	Right Kick Panel



: SPLICE POINTS

Code	See Page	Wire Harness with Splice Points	Code	See Page	Wire Harness with Splice Points
E5	40	Engine Room Main Wire	I3	44	Cowl Wire
I1	44				

REAR WINDOW DEFOGGER

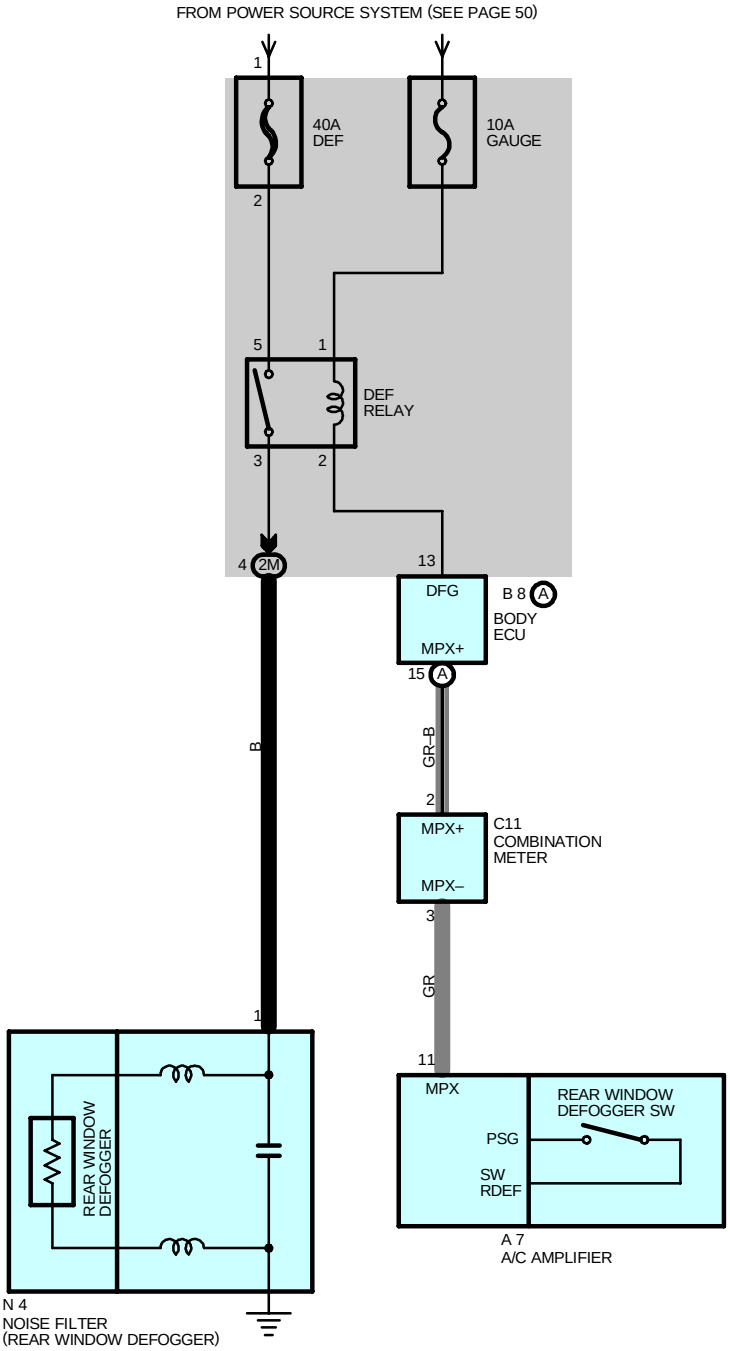

SERVICE HINTS

DEF RELAY

5–3 : Closed with the ignition SW on and the rear window defogger SW on

: PARTS LOCATION

Code		See Page	Code	See Page	Code	See Page
A7		36	C11	36		
B8	A	36	N4	39		

: JUNCTION BLOCK AND WIRE HARNESS CONNECTOR

Code	See Page	Junction Block and Wire Harness (Connector Location)
2M	31	Floor Wire and Instrument Panel J/B (Cowl Side Panel LH)

COMBINATION METER

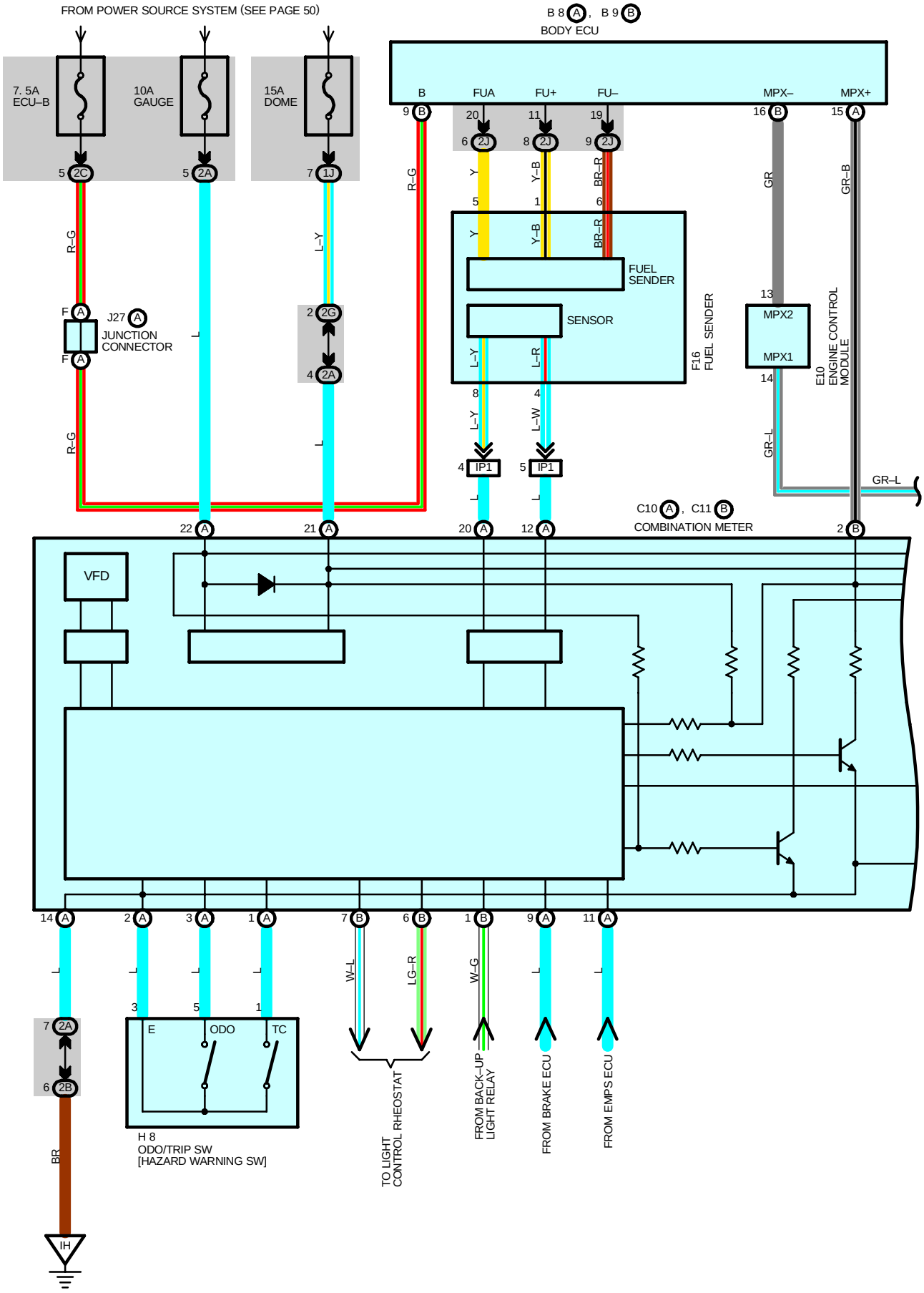

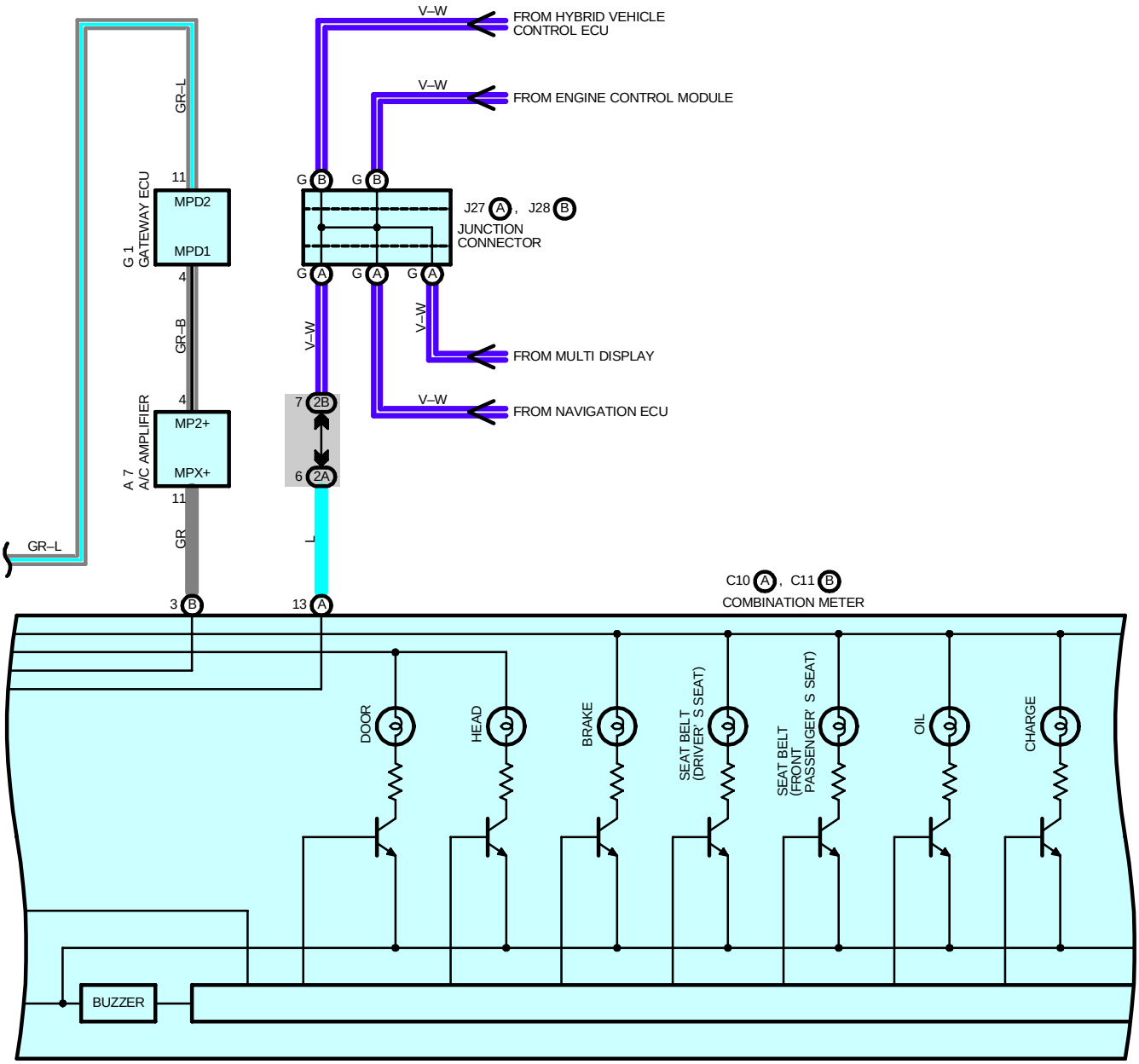
V–W
FROM HYBRID VEHICLE CONTROL ECU
V–W
FROM ENGINE CONTROL MODULE
GR–L
11
MPD2
MPD1
G 1
GATEWAY ECU
4
GR–B
4
MP2+
MPX+
A 7
A/C AMPLIFIER
11
GR
3 B
GR–L
G B
G B
J27 A , J28 B
JUNCTION CONNECTOR
G A
G A
G A
V–W
V–W
FROM MULTI DISPLAY
7 2B
6 2A
V–W
FROM NAVIGATION ECU
L
13 A
C10 A , C11 B
COMBINATION METER
DOOR
HEAD
BRAKE
SEAT BELT (DRIVER' S SEAT)
SEAT BELT (FRONT PASSENGER' S SEAT)
OIL
CHARGE
BUZZER

COMBINATION METER

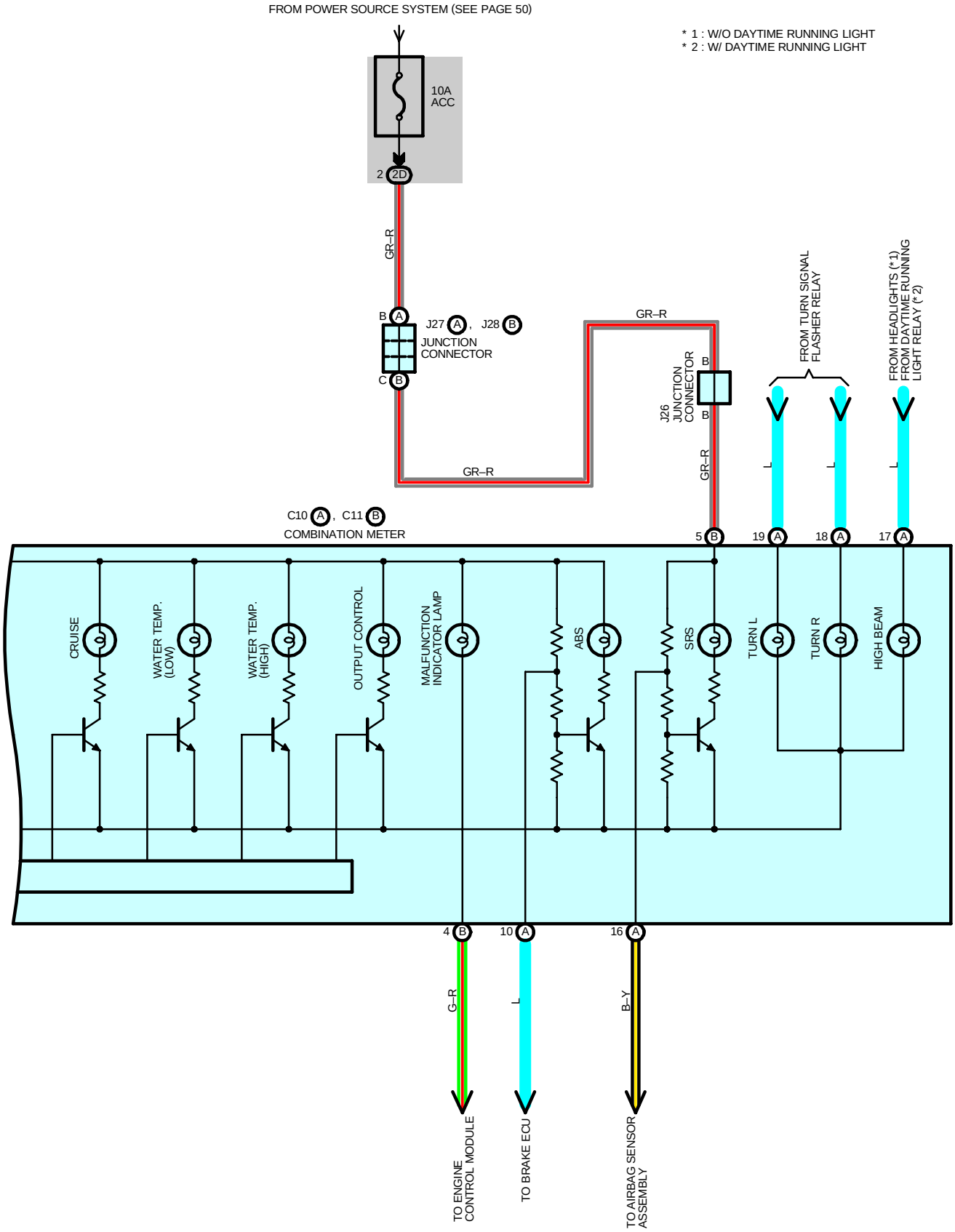

SERVICE HINTS

C10 (A), C11 (B) COMBINATION METER

(A)22–GROUND : Approx. **12** volts with the ignition SW at **ON** position
(B) 5–GROUND : Approx. **12** volts with the ignition SW at **ON** or **ACC** position
(A)21–GROUND : Always approx. **12** volts
(A)14–GROUND : Always continuity

: PARTS LOCATION

Code		See Page	Code		See Page	Code		See Page
A7		36	C11	B	36	H8		37
B8	A	36	E10		36	J26		37
B9	B	36	F16		38	J27	A	37
C10	A	36	G1		37	J28	B	37

: JUNCTION BLOCK AND WIRE HARNESS CONNECTOR

Code	See Page	Junction Block and Wire Harness (Connector Location)
1J	27	Engine Room Main Wire and Engine Room J/B (Engine Compartment Left)
2A	30	Instrument Panel Wire and Instrument Panel J/B (Cowl Side Panel LH)
2B		
2C		
2D		
2G	31	Engine Room Main Wire and Instrument Panel J/B (Cowl Side Panel LH)
2J	31	Cowl Wire and Instrument Panel J/B (Cowl Side Panel LH)

: CONNECTOR JOINING WIRE HARNESS AND WIRE HARNESS

Code	See Page	Joining Wire Harness and Wire Harness (Connector Location)
IP1	44	Instrument Panel Wire and Cowl Wire (Right Kick Panel)

: GROUND POINTS

Code	See Page	Ground Points Location
IH	42	Right Kick Panel

RADIATOR FAN AND CONDENSER FAN

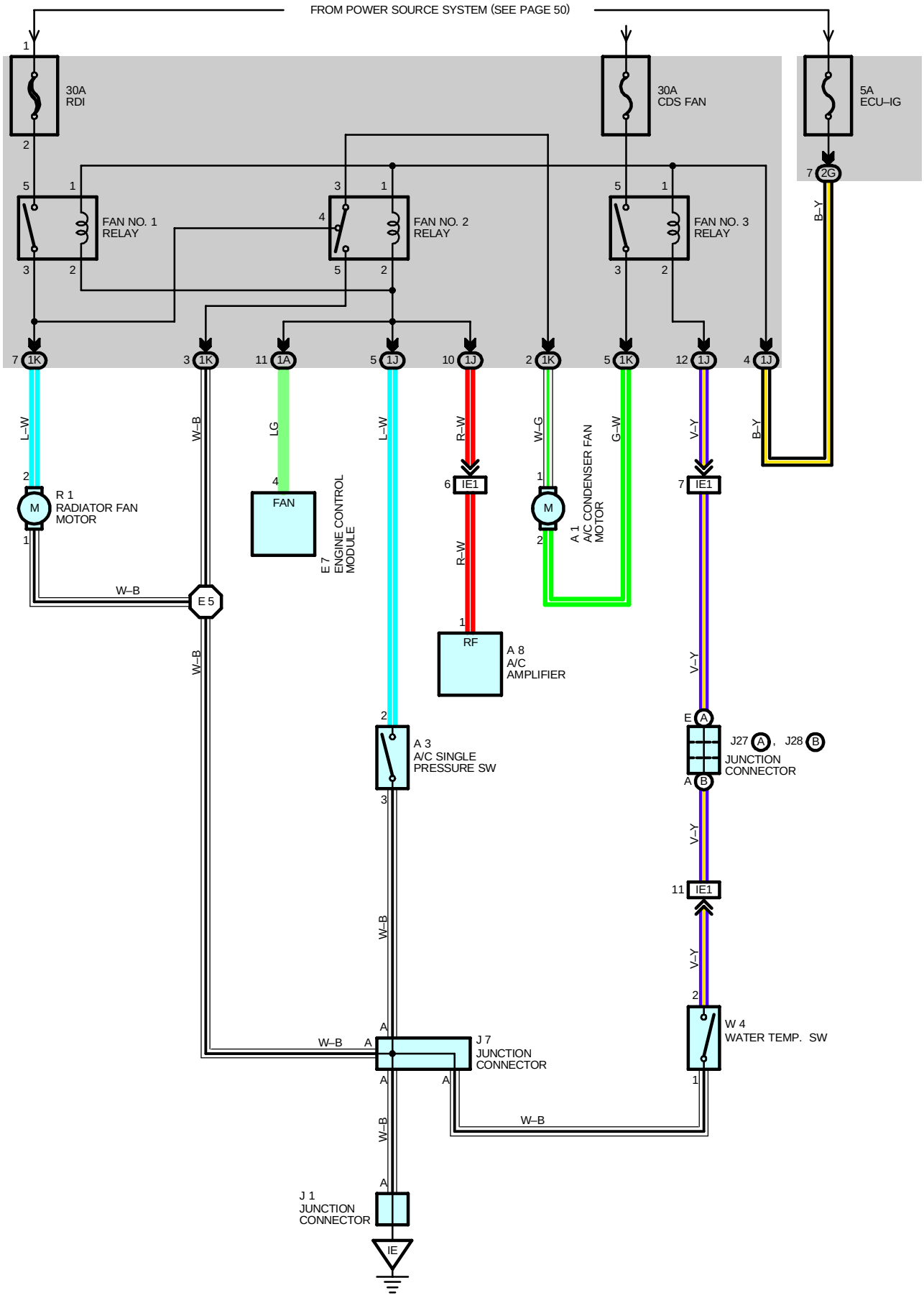

SYSTEM OUTLINE

The radiator fan motor and A/C condenser fan motor operates according to the water temp. SW (Inverter), A/C single pressure SW, and the A/C system condition. The FAN NO.1 relay, FAN NO.2 relay, FAN NO.3 relay are turned on/off, to operate the fan motors at low speed (In series), or high speed (In parallel).

1. LOW SPEED OPERATION

When the water temp. SW (Inverter) is on, the radiator fan motor and A/C condenser fan motor operates at low speed.

2. HIGH SPEED OPERATION

When the water temp. SW (Inverter) is on, if the A/C system is operating A/C single pressure SW is on, the radiator fan motor and A/C condenser fan motor operates at high speed.

SERVICE HINTS

A3 A/C SINGLE PRESSURE SW

3–2 : Close above approx. **15.2** kgf/cm^2 (**220** psi, **1520** kpa)
Open below approx. **12.3** kgf/cm^2 (**178** psi, **1230** kpa)

: PARTS LOCATION

Code	See Page	Code		See Page	Code	See Page
A1	34	J1		37	R1	35
A3	34	J7		37	W4	35
A8	36	J27	A	37		
E7	36	J28	B	37		

: JUNCTION BLOCK AND WIRE HARNESS CONNECTOR

Code	See Page	Junction Block and Wire Harness (Connector Location)
1A	27	Engine Wire and Engine Room J/B (Engine Compartment Left)
1J	27	Engine Room Main Wire and Engine Room J/B (Engine Compartment Left)
1K		
2G	31	Engine Room Main Wire and Instrument Panel J/B (Cowl Side Panel LH)

: CONNECTOR JOINING WIRE HARNESS AND WIRE HARNESS

Code	See Page	Joining Wire Harness and Wire Harness (Connector Location)
IE1	42	Instrument Panel Wire and Engine Room Main Wire (Left Kick Panel)

: GROUND POINTS

Code	See Page	Ground Points Location
IE	42	Cowl Side Panel LH

: SPLICE POINTS

Code	See Page	Wire Harness with Splice Points	Code	See Page	Wire Harness with Splice Points
E5	40	Engine Room Main Wire			

AIR CONDITIONING

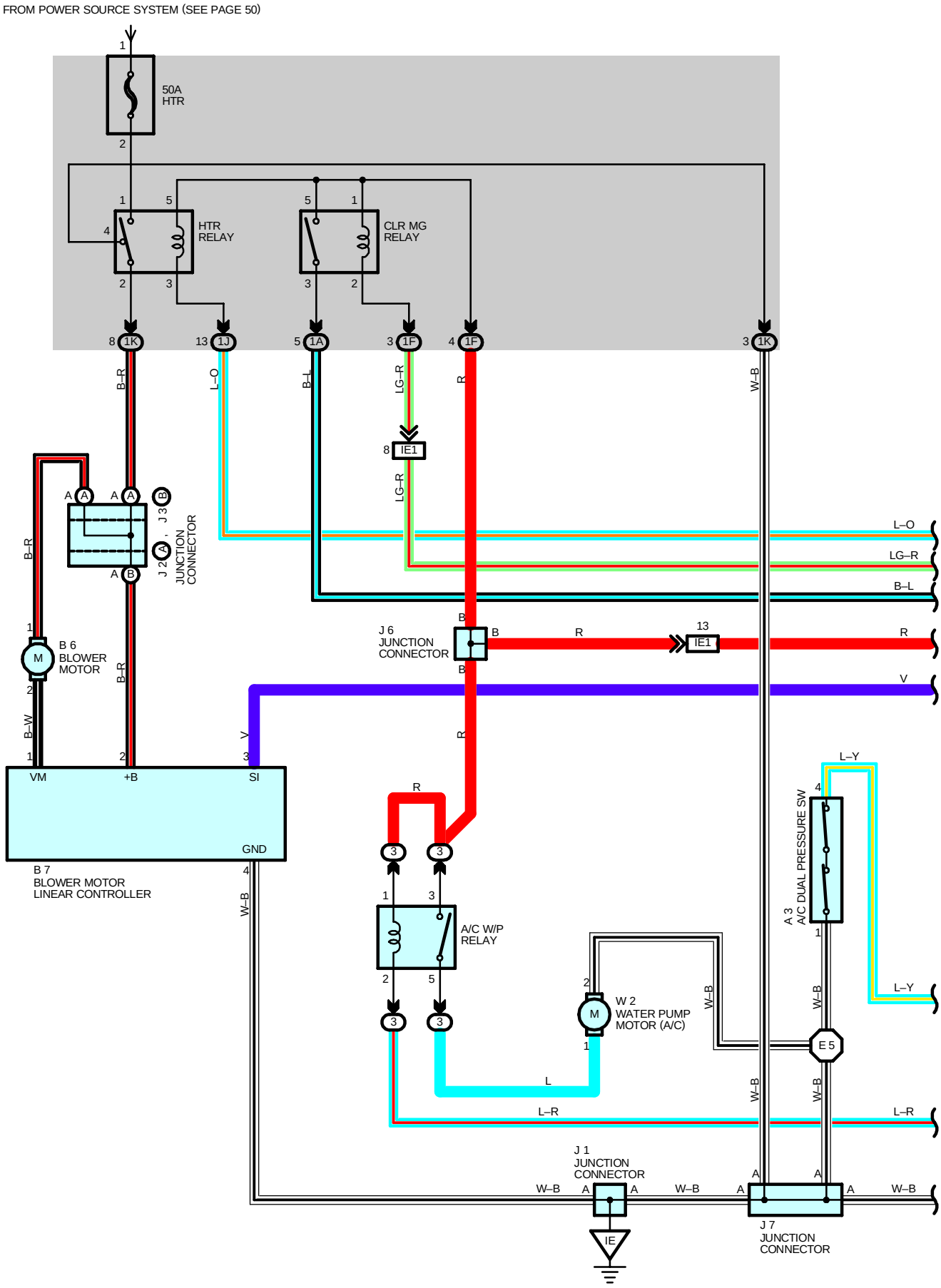

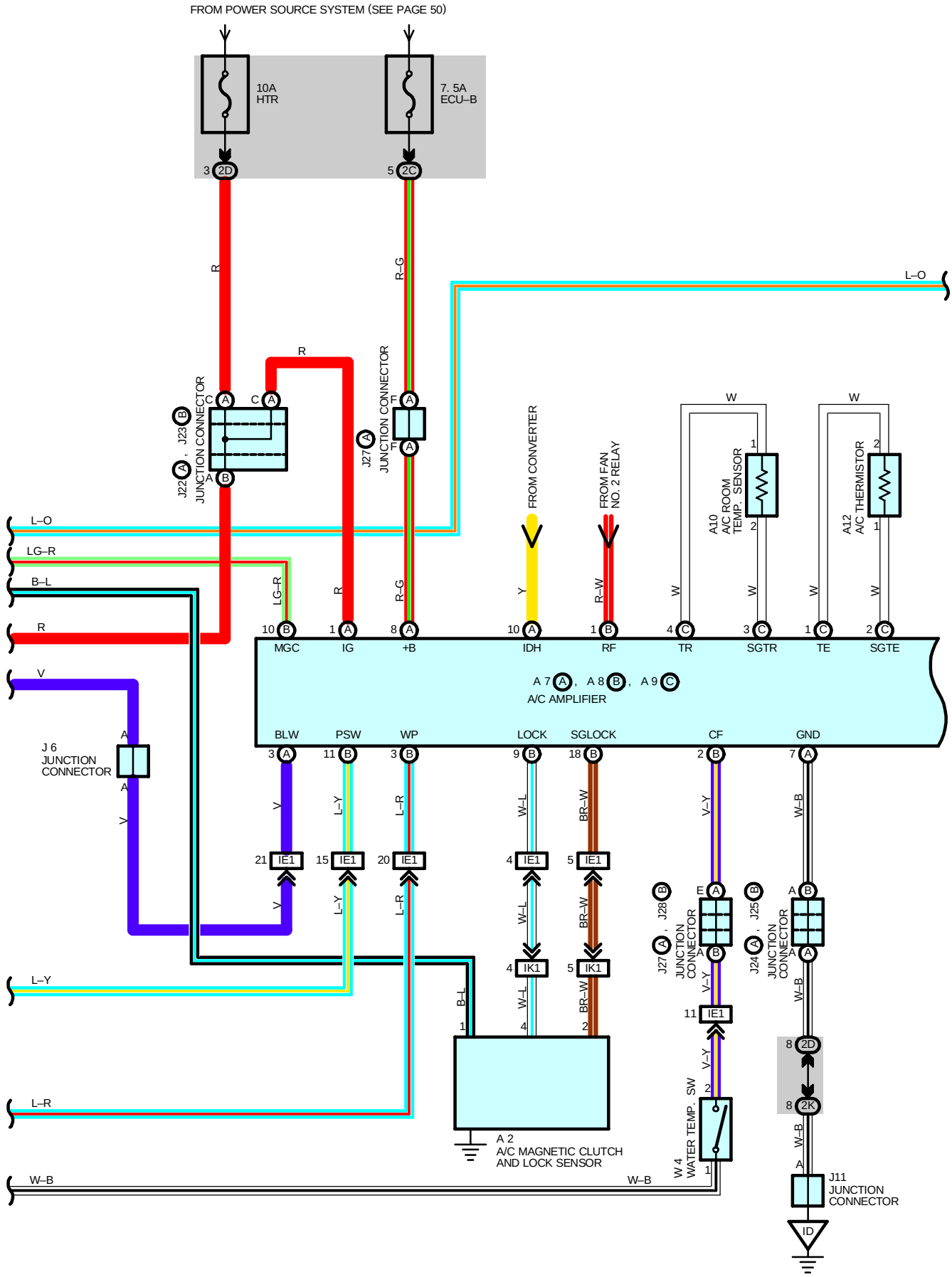
FROM POWER SOURCE SYSTEM (SEE PAGE 50)
10A HTR
7. 5A ECU–B
3 2D
5 2C
R
R–G
L–O
R
J23 , J22 JUNCTION CONNECTOR
J27 JUNCTION CONNECTOR
FROM CONVERTER
FROM FAN NO. 2 RELAY
W
A10 A/C ROOM TEMP. SENSOR
A12 A/C THERMISTOR
L–O
LG–R
B–L
R
V
J 6 JUNCTION CONNECTOR
10 MGC
1 IG
8 +B
10 IDH
1 RF
4 TR
3 SGTR
1 TE
2 SGTE
A 7 , A 8 , A 9
A/C AMPLIFIER
BLW
PSW
WP
LOCK
SGLOCK
CF
GND
21 IE1
15 IE1
20 IE1
4 IE1
5 IE1
11 IE1
4 IK1
5 IK1
J28 , J27 JUNCTION CONNECTOR
J25 , J24 JUNCTION CONNECTOR
W 4 WATER TEMP. SW
8 2D
8 2K
J11 JUNCTION CONNECTOR
ID
L–Y
L–R
B–L
W–B
A 2 A/C MAGNETIC CLUTCH AND LOCK SENSOR

AIR CONDITIONING

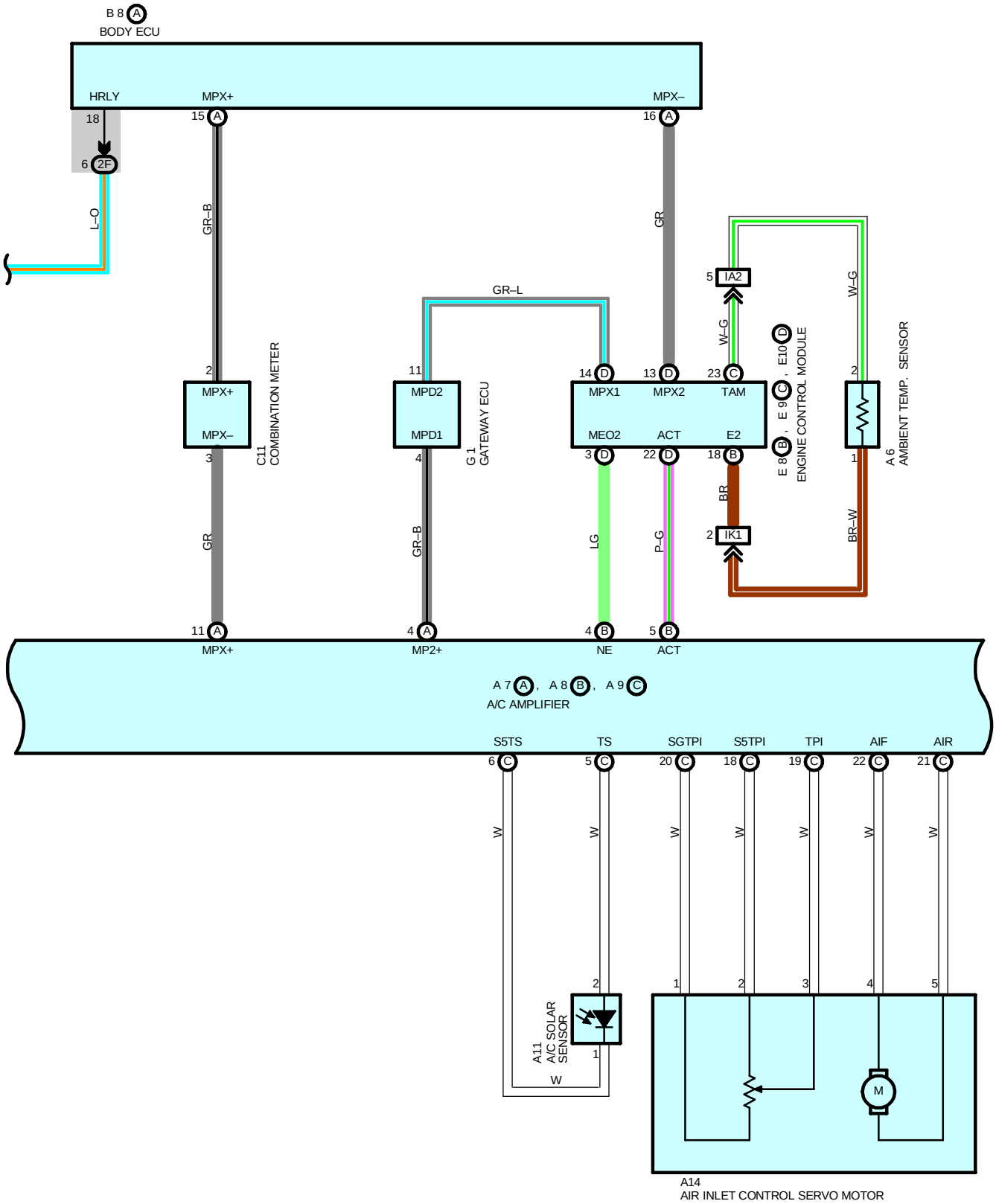

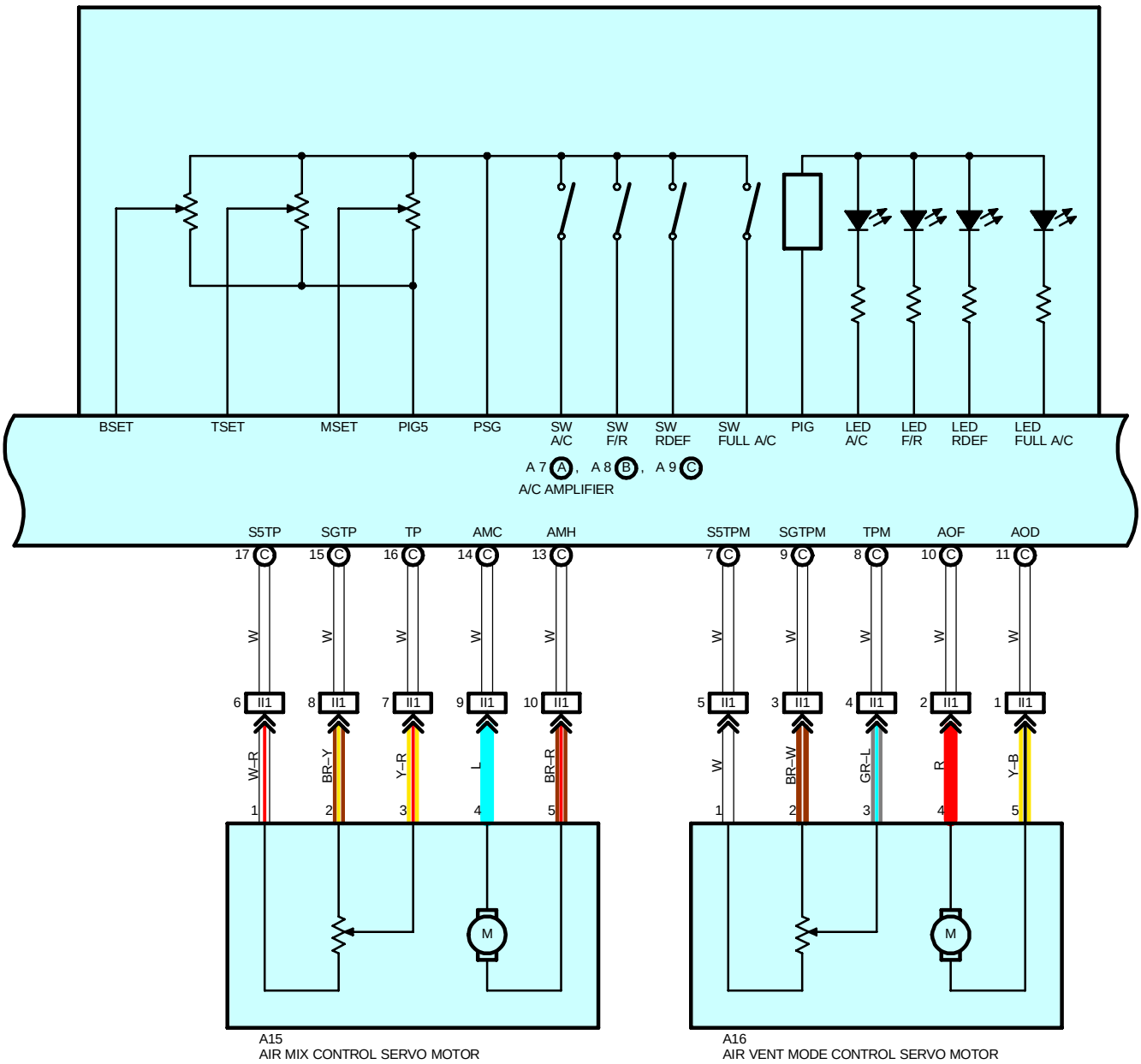

A15
AIR MIX CONTROL SERVO MOTOR

A16
AIR VENT MODE CONTROL SERVO MOTOR

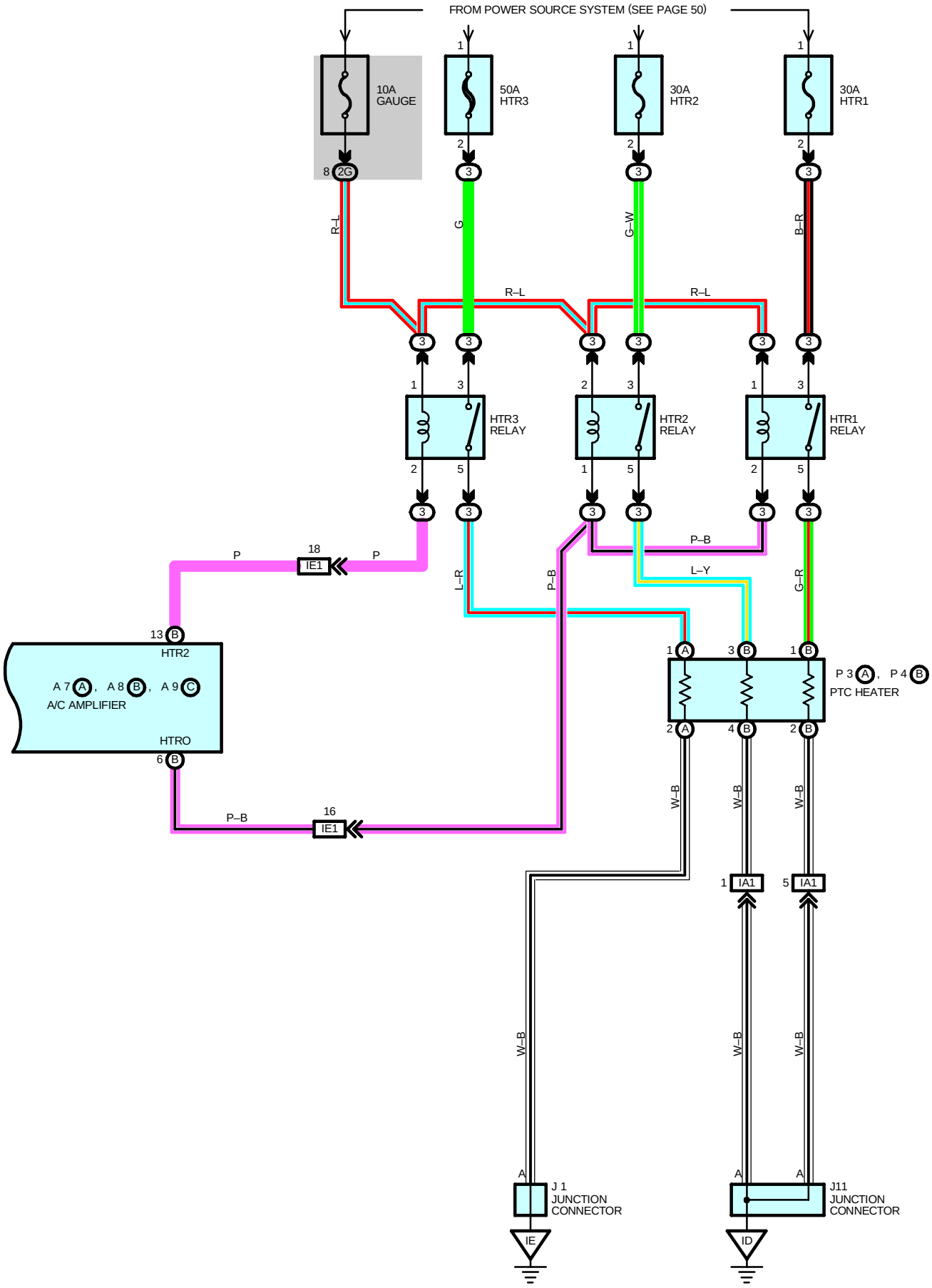
FROM POWER SOURCE SYSTEM (SEE PAGE 50)
10A GAUGE
50A HTR3
30A HTR2
30A HTR1
8 2G
R–L
G
G–W
B–R
HTR3 RELAY
HTR2 RELAY
HTR1 RELAY
P
18 IE1
P
L–R
P–B
L–Y
G–R
13 B
HTR2
A 7 A , A 8 B , A 9 C
A/C AMPLIFIER
HTRO
6 B
P–B
16 IE1
P 3 A , P 4 B
PTC HEATER
W–B
1 IA1
5 IA1
J 1 JUNCTION CONNECTOR
J11 JUNCTION CONNECTOR
IE
ID

SERVICE HINTS

A3 A/C DUAL PRESSURE SW

1–4 : Open with the refrigerant pressure at less than approx. **196** kpa (**2.0** kgf/cm^2, **28.4** psi), or more than approx. **3140** kpa (**32** kgf/cm^2, **455** psi),

A7 (A), A8 (B), A9 (C) A/C AMPLIFIER

(A) 8–GROUND : Always approx. **12** volts
(A) 1–GROUND : Approx. **12** volts with the ignition SW at **ON** position
(A)24–GROUND : Always continuity

: PARTS LOCATION

Code	See Page	Code	See Page	Code	See Page
A2	34	B6	36	J7	37
A3	34	B7	36	J11	37
A6	34	B8 A	36	J22 A	37
A7 A	36	C11	36	J23 B	37
A8 B	36	E8 B	36	J24 A	37
A9 C	36	E9 C	36	J25 B	37
A10	36	E10 D	36	J27 A	37
A11	36	G1	37	J28 B	37
A12	36	J1	37	P3 A	37
A14	36	J2 A	37	P4 B	37
A15	36	J3 B	37	W2	35
A16	36	J6	37	W4	35

: RELAY BLOCKS

Code	See Page	Relay Blocks (Relay Block Location)
3	24	Engine Room R/B No.3 (Engine Compartment Right)

: JUNCTION BLOCK AND WIRE HARNESS CONNECTOR

Code	See Page	Junction Block and Wire Harness (Connector Location)
1A	27	Engine Wire and Engine Room J/B (Engine Compartment Left)
1F	27	Engine Room Main Wire and Engine Room J/B (Engine Compartment Left)
1J		
1K		
2C	30	Instrument Panel Wire and Instrument Panel J/B (Cowl Side Panel LH)
2D		
2F	31	Engine Room Main Wire and Instrument Panel J/B (Cowl Side Panel LH)
2G		
2K	31	Cowl Wire and Instrument Panel J/B (Cowl Side Panel LH)

: CONNECTOR JOINING WIRE HARNESS AND WIRE HARNESS

Code	See Page	Joining Wire Harness and Wire Harness (Connector Location)
IA1	42	Engine Room Main Wire and Cowl Wire (Cowl Side Panel LH)
IA2		
IE1	42	Instrument Panel Wire and Engine Room Main Wire (Left Kick Panel)
II1	44	Instrument Panel Wire and A/C Sub Wire (Instrument Panel Brace LH)
IK1	44	Engine Wire and Engine Room Main Wire (Right Kick Panel)

: GROUND POINTS

Code	See Page	Ground Points Location
ID	42	Cowl Side Panel LH
IE		

 **: SPLICE POINTS**

Code	See Page	Wire Harness with Splice Points	Code	See Page	Wire Harness with Splice Points
E5	40	Engine Room Main Wire			

I GROUND POINT

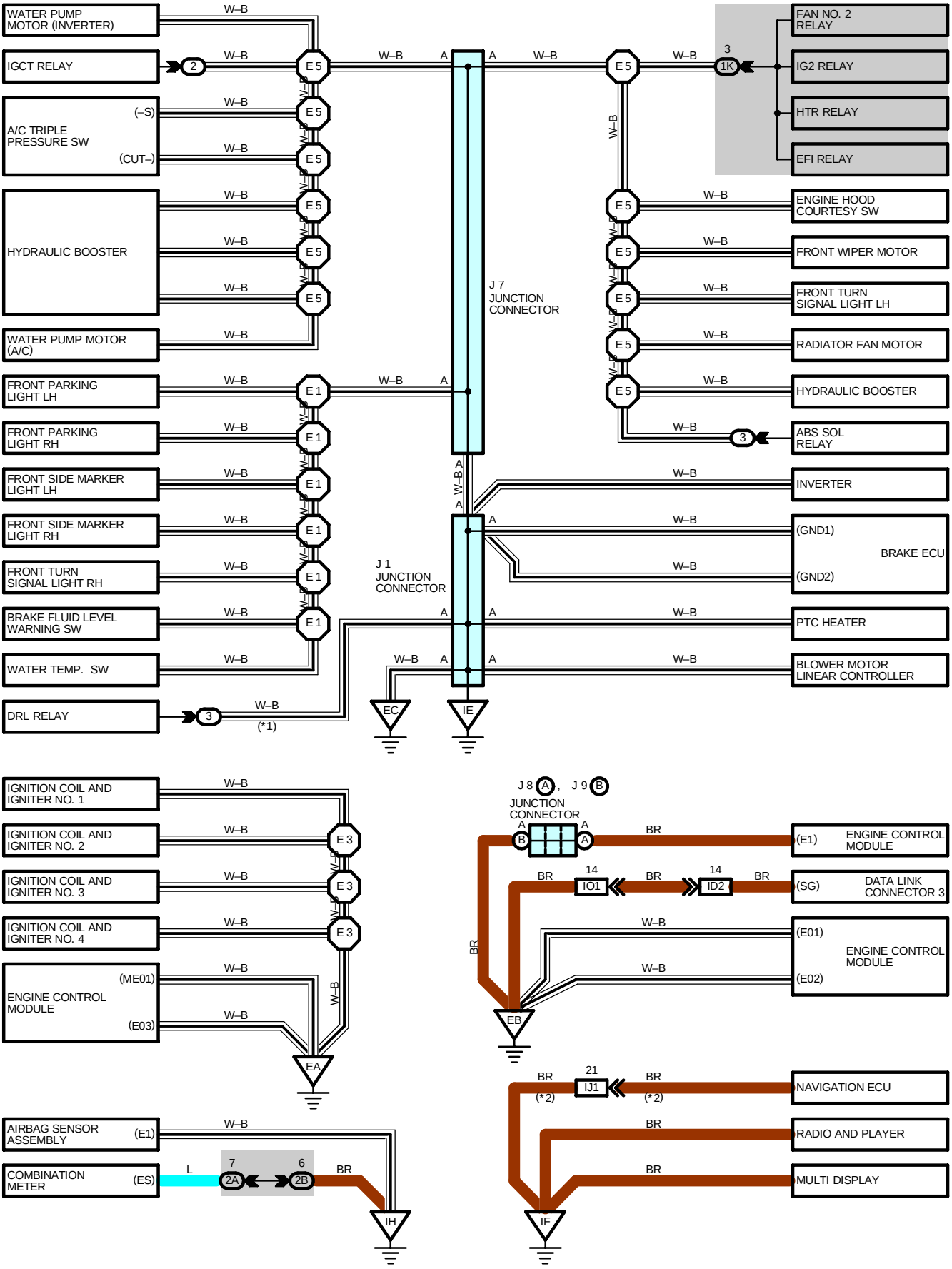

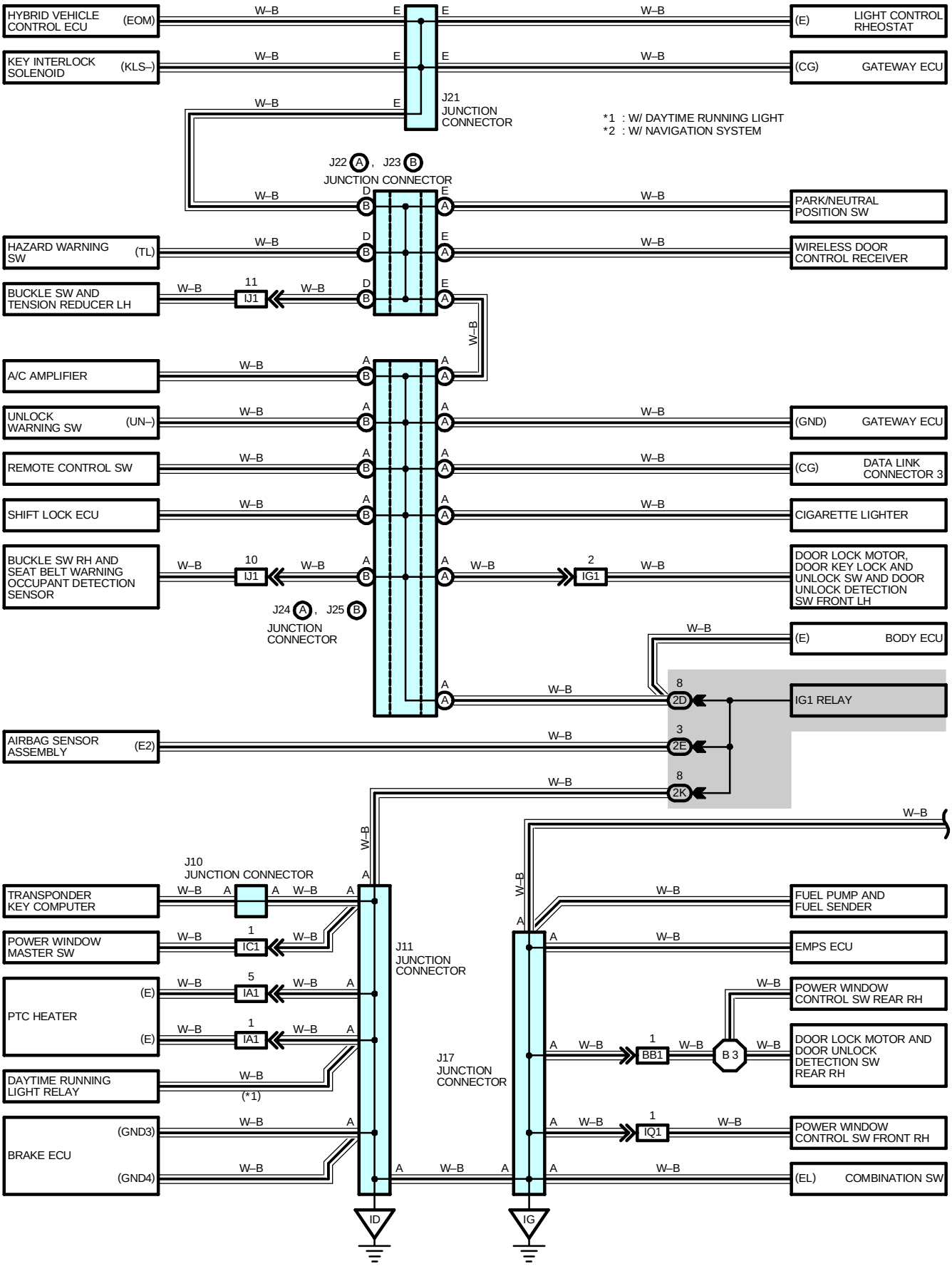
HYBRID VEHICLE CONTROL ECU (EOM)
KEY INTERLOCK SOLENOID (KLS–)
J21 JUNCTION CONNECTOR
*1 : W/ DAYTIME RUNNING LIGHT
*2 : W/ NAVIGATION SYSTEM
(E) LIGHT CONTROL RHEOSTAT
(CG) GATEWAY ECU
J22 A , J23 B JUNCTION CONNECTOR
PARK/NEUTRAL POSITION SW
HAZARD WARNING SW (TL)
WIRELESS DOOR CONTROL RECEIVER
BUCKLE SW AND TENSION REDUCER LH
IJ1
A/C AMPLIFIER
UNLOCK WARNING SW (UN–)
(GND) GATEWAY ECU
REMOTE CONTROL SW
(CG) DATA LINK CONNECTOR 3
SHIFT LOCK ECU
CIGARETTE LIGHTER
BUCKLE SW RH AND SEAT BELT WARNING OCCUPANT DETECTION SENSOR
IG1
DOOR LOCK MOTOR, DOOR KEY LOCK AND UNLOCK SW AND DOOR UNLOCK DETECTION SW FRONT LH
J24 A , J25 B JUNCTION CONNECTOR
(E) BODY ECU
IG1 RELAY
AIRBAG SENSOR ASSEMBLY (E2)
2D
2E
2K
J10 JUNCTION CONNECTOR
TRANSPONDER KEY COMPUTER
POWER WINDOW MASTER SW
IC1
PTC HEATER
(E)
IA1
DAYTIME RUNNING LIGHT RELAY
(*1)
BRAKE ECU
(GND3)
(GND4)
J11 JUNCTION CONNECTOR
J17 JUNCTION CONNECTOR
FUEL PUMP AND FUEL SENDER
EMPS ECU
POWER WINDOW CONTROL SW REAR RH
DOOR LOCK MOTOR AND DOOR UNLOCK DETECTION SW REAR RH
BB1
B 3
POWER WINDOW CONTROL SW FRONT RH
IQ1
(EL) COMBINATION SW
ID
IG

I GROUND POINT

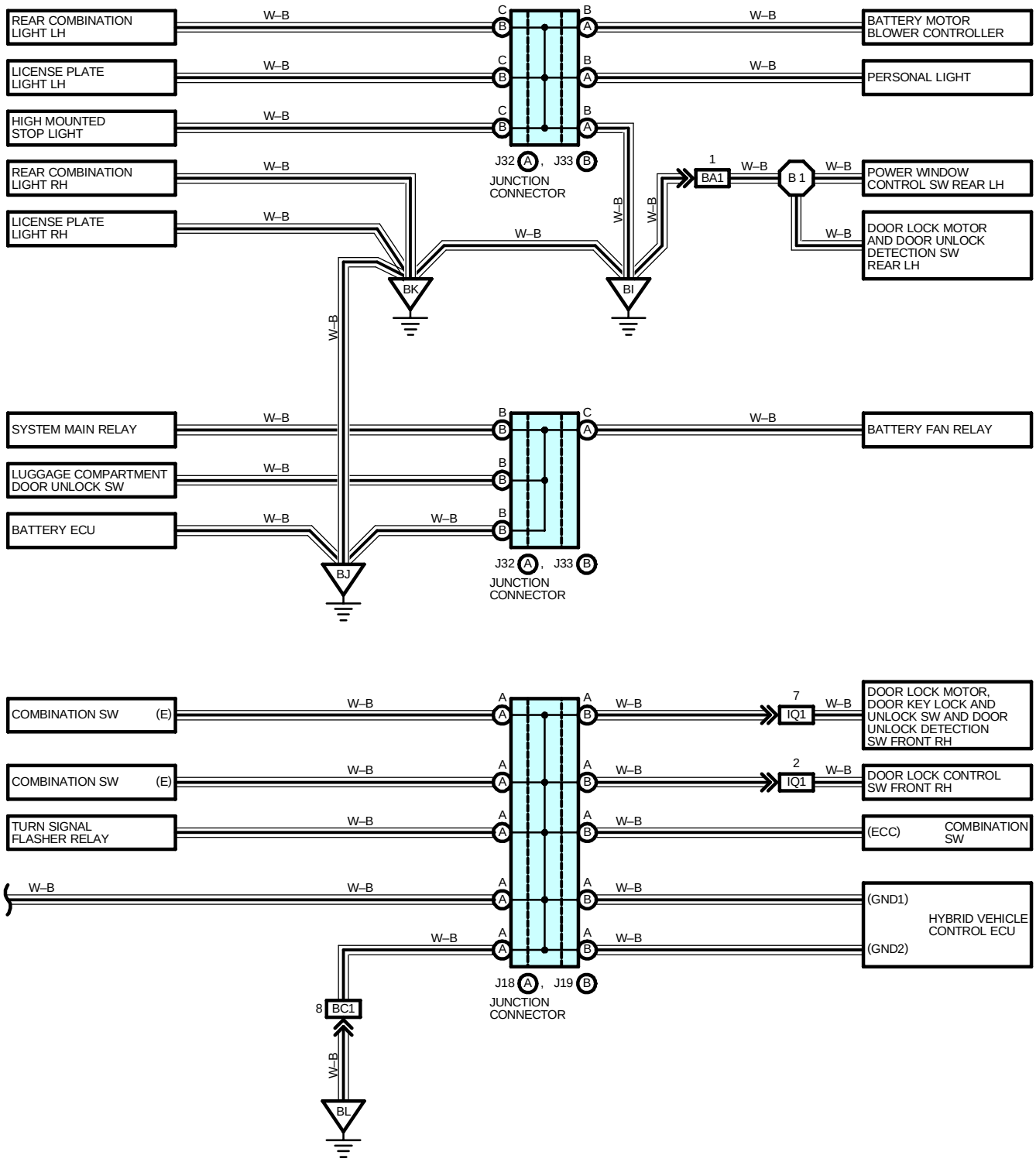

: PARTS LOCATION

Code	See Page	Code	See Page	Code	See Page
J1	37	J17	37	J24 A	37
J7	37	J18 A	37	J25 B	37
J8 A	37	J19 B	37	J32 A	38
J9 B	37	J21	37	J33 B	38
J10	37	J22 A	37		
J11	37	J23 B	37		

: RELAY BLOCKS

Code	See Page	Relay Blocks (Relay Block Location)
2	23	Engine Room R/B No.2 (Right Side of Reserve Tank)
3	24	Engine Room R/B No.3 (Engine Compartment Right)

: JUNCTION BLOCK AND WIRE HARNESS CONNECTOR

Code	See Page	Junction Block and Wire Harness (Connector Location)
1K	27	Engine Room Main Wire and Engine Room J/B (Engine Compartment Left)
2A	30	Instrument Panel Wire and Instrument Panel J/B (Cowl Side Panel LH)
2B		
2D		
2E		
2K	31	Cowl Wire and Instrument Panel J/B (Cowl Side Panel LH)

: CONNECTOR JOINING WIRE HARNESS AND WIRE HARNESS

Code	See Page	Joining Wire Harness and Wire Harness (Connector Location)
IA1	42	Engine Room Main Wire and Cowl Wire (Cowl Side Panel LH)
IC1	42	Front Door LH Wire and Cowl Wire (Left Kick Panel)
ID2	42	Instrument Panel Wire and Cowl Wire (Left Kick Panel)
IG1	42	Front Door LH Wire and Instrument Panel Wire (Left Kick Panel)
IJ1	44	Floor No.3 Wire and Instrument Panel Wire (Under the Instrument Panel Center)
IO1	44	Engine Wire and Cowl Wire (Right Kick Panel)
IQ1	44	Front Door RH Wire and Cowl Wire (Right Kick Panel)
BA1	46	Rear Door No.2 Wire and Floor Wire (Center Pillar LH)
BB1	46	Rear Door No.1 Wire and Cowl Wire (Center Pillar RH)
BC1	46	Cowl Wire and Fuel Tank Wire (Near the Fuel Tank)

: GROUND POINTS

Code	See Page	Ground Points Location
EA	40	Engine Block
EB		
EC	40	Engine Compartment Left
ID	42	Cowl Side Panel LH
IE		
IF	42	Left Kick Panel
IG	42	Cowl Side Panel RH
IH	42	Right Kick Panel
BI	46	Left Side of Rear Pillar
BJ	46	Right Side of Rear Pillar
BK	46	Back Panel Center
BL	46	Near the Fuel Tank

I GROUND POINT

 **: SPLICE POINTS**

Code	See Page	Wire Harness with Splice Points	Code	See Page	Wire Harness with Splice Points
E1	40	Engine Room Main Wire	B1	46	Rear Door No.2 Wire
E3	40	Engine Wire	B3	46	Rear Door No.1 Wire
E5	40	Engine Room Main Wire			

J POWER SOURCE (Current Flow Chart)

The chart below shows the route by which current flows from the battery to each electrical source (Fusible Link, Circuit Breaker, Fuse, etc.) and other Parts.

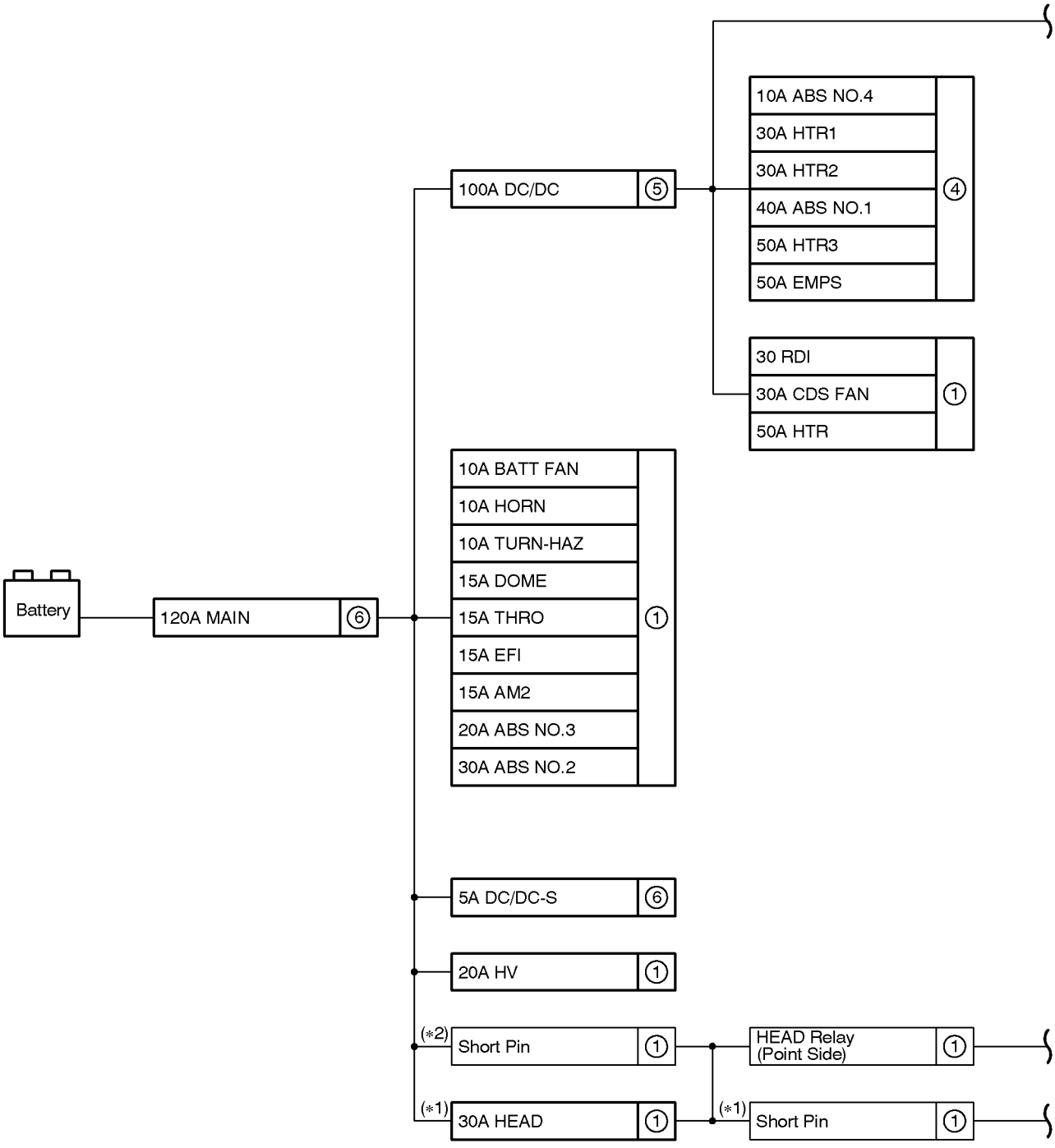

[LOCATION] ① : Engine Room J/B (See Page 26) ② : Instrument Panel J/B (See Page 30)
⑤ : Fusible Link Block No.1 (F10,F11,F12,F13 on See Page 22)

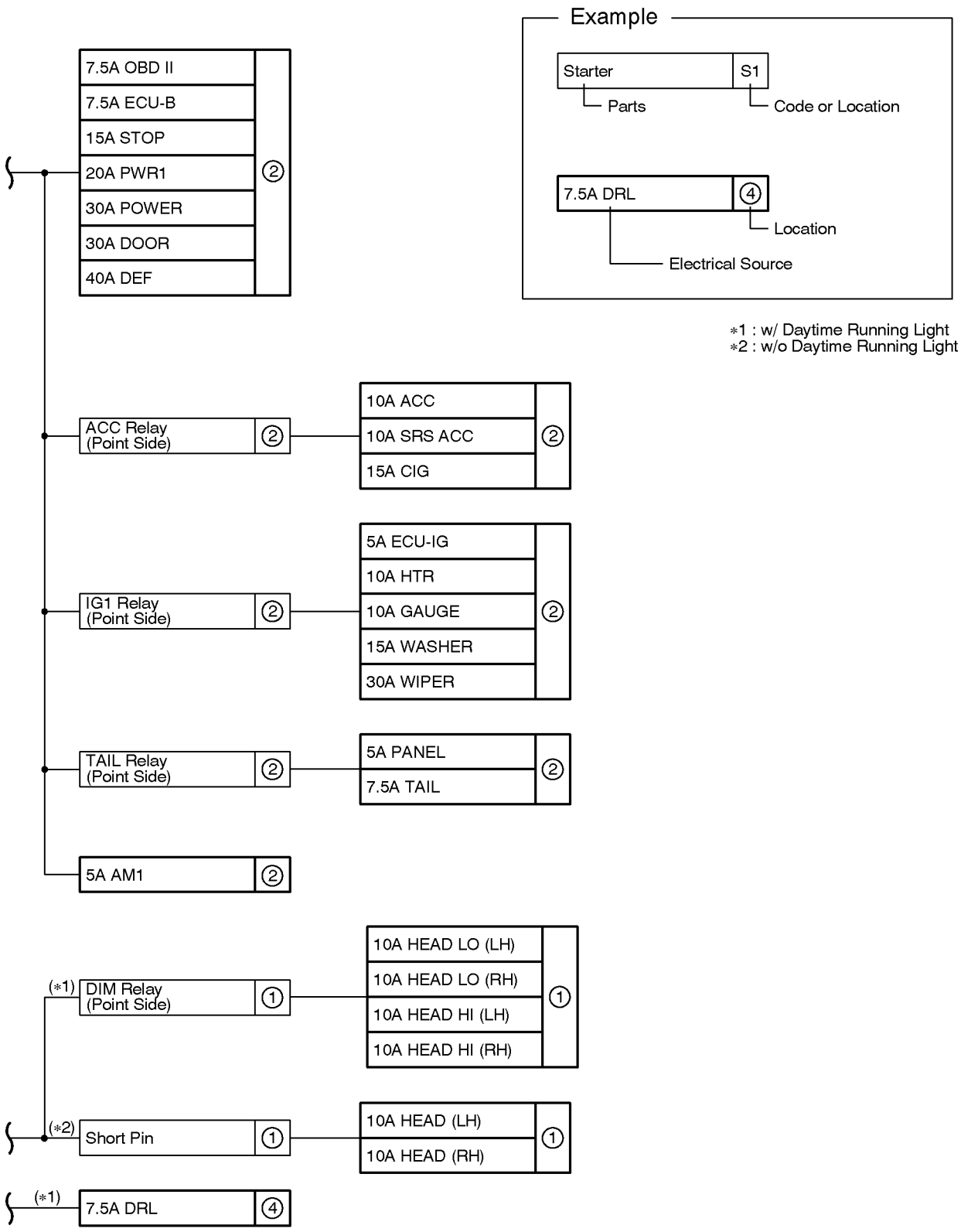

③ : Engine Room R/B No.2 (See Page 23) ④ : Engine Room R/B No.3 (See Page 24)

⑥ : Fusible Link Block No.2 (F17,F18 on See Page 23)

J POWER SOURCE (Current Flow Chart)

Fusible Link Block No.1 (See Page 22)

Fuse		System	Page
100A	DC/DC	Illumination	92
		Key Reminder and Light Reminder Buzzer	114
		Light Auto Turn Off	104
		Taillight	88
		TOYOTA Hybrid System	54

Fusible Link Block No.2 (See Page 23)

Fuse		System	Page
5A	DC/DC–S	TOYOTA Hybrid System	54
120A	MAIN	ABS	172
		Engine Control	68
		Headlight (w/o Daytime Running Light)	84
		Hybrid Vehicle Immobiliser System	78
		Illumination	92
		Key Reminder and Light Reminder Buzzer	114
		Light Auto Turn Off	104
		SRS	167
		Taillight	88
		TOYOTA Hybrid System	54

Engine Room R/B No.3 (See Page 24)

Fuse		System	Page
7.5A	DRL	Headlight (w/ Daytime Running Light)	80
10A	ABS NO.4	ABS	172
30A	HTR1	Air Conditioning	188
30A	HTR2	Air Conditioning	188
40A	ABS NO.1	ABS	172
50A	EMPS	EMPS	164
50A	HTR3	Air Conditioning	188

Engine Room J/B (See Page 26)

Fuse		System	Page
10A	BATT FAN	TOYOTA Hybrid System	54
10A	HEAD (LH)	Headlight (w/o Daytime Running Light)	84
10A	HEAD (RH)	Headlight (w/o Daytime Running Light)	84
10A	HEAD HI (LH)	Headlight (w/ Daytime Running Light)	80
10A	HEAD HI (RH)	Headlight (w/ Daytime Running Light)	80
10A	HEAD LO (LH)	Headlight (w/ Daytime Running Light)	80
10A	HEAD LO (RH)	Headlight (w/ Daytime Running Light)	80
10A	HORN	Horn	124
		Theft Deterrent	146
10A	TURN–HAZ	Turn Signal and Hazard Warning Light	96

* These are the page numbers of the first page on which the related system is shown.

Fuse		System	Page
15A	AM2	ABS	172
		Engine Control	68
		Hybrid Vehicle Immobiliser System	78
		SRS	167
		TOYOTA Hybrid System	54
15A	DOME	Combination Meter	182
		Door Lock Control	134
		Headlight (w/ Daytime Running Light)	80
		Headlight (w//o Daytime Running Light)	84
		Illumination	92
		Interior Light	108
		Key Reminder and Light Reminder Buzzer	114
		Navigation System	156
		Power Window	126
		Radio and Player	152
		Seat Belt Warning	118
		Theft Deterrent	146
		TOYOTA Hybrid System	54
		Wireless Door Lock Control	140
15A	EFI	Engine Control	68
15A	THRO	Engine Control	68
20A	ABS NO.3	ABS	172
20A	HV	TOYOTA Hybrid System	54
30A	ABS NO.2	ABS	172
30A	CDS FAN	Radiator Fan and Condenser Fan	186
30A	HEAD	Headlight (w/ Daytime Running Light)	80
		Key Reminder and Light Reminder Buzzer	114
		Light Auto Turn Off	104
30A	RDI	Radiator Fan and Condenser Fan	186
50A	HTR	Air Conditioning	188

Instrument Panel J/B (See Page 30)

Fuse		System	Page
5A	ECU–IG	ABS	172
		Electric Tension Reducer	162
		EMPS	164
		Gateway System	160
		Navigation System	156
		Radiator Fan and Condenser Fan	186
		Shift Lock	132
5A	PANEL	Illumination	92
7.5A	ECU–B	Air Conditioning	188
		Combination Meter	182

* These are the page numbers of the first page on which the related system is shown.

J POWER SOURCE (Current Flow Chart)

Fuse		System	Page
7.5A	ECU–B	Door Lock Control	134
		EMPS	164
		Gateway System	160
		Headlight (w/ Daytime Running Light)	80
		Hybrid Vehicle Immobiliser System	78
		Interior Light	108
		Key Reminder and Light Reminder Buzzer	114
		Light Auto Turn Off	104
		Power Window	126
		Theft Deterrent	146
		Wireless Door Lock Control	140
7.5A	OBDII	Engine Control	68
		Theft Deterrent	146
7.5A	TAIL	Key Reminder and Light Reminder Buzzer	114
		Light Auto Turn Off	104
		Taillight	88
10A	ACC	Combination Meter	182
		Gateway System	160
		Navigation System	156
		Radio and Player	152
		Remote Control Mirror	130
		Shift Lock	132
		SRS	167
10A	GAUGE	ABS	172
		Air Conditioning	188
		Back–Up Light	102
		Combination Meter	182
		Door Lock Control	134
		EMPS	164
		Engine Control	68
		Headlight (w/ Daytime Running Light)	80
		Key Reminder and Light Reminder Buzzer	114
		Light Auto Turn Off	104
		Navigation System	156
		Power Window	126
		Rear Window Defogger	180
		Seat Belt Warning	118
		Theft Deterrent	146
		TOYOTA Hybrid System	54
		Turn Signal and Hazard Warning Light	96
		Wireless Door Lock Control	140
10A	HTR	Air Conditioning	188
10A	SRS ACC	SRS	167

* These are the page numbers of the first page on which the related system is shown.

Fuse		System	Page
15A	CIG	Cigarette Lighter	122
15A	STOP	ABS Engine Control Shift Lock Stop Light	172 68 132 100
15A	WASHER	Wiper and Washer	120
20A	PWR1	Power Window	126
30A	DOOR	Door Lock Control Theft Deterrent Wireless Door Lock Control	134 146 140
30A	POWER	Power Window	126
30A	WIPER	Wiper and Washer	120
40A	DEF	Rear Window Defogger	180

* These are the page numbers of the first page on which the related system is shown.

K CONNECTOR LIST

A1
BLACK



A2
DARK GRAY



A3
BLACK

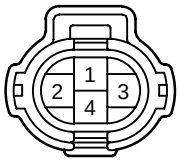

A4
GRAY



A5
GRAY



A6
BLACK



A7

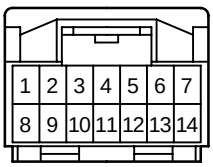

A8

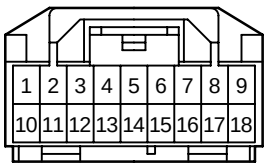

A9

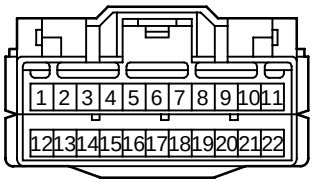

A10

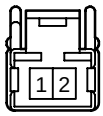

A11



A12



A13
BLACK



A14

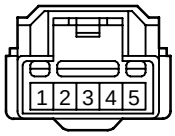

A15
BLACK

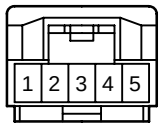

A16

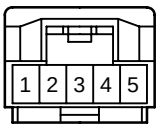

A17
YELLOW

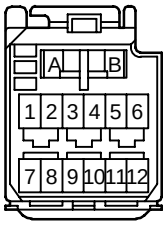

A18
YELLOW

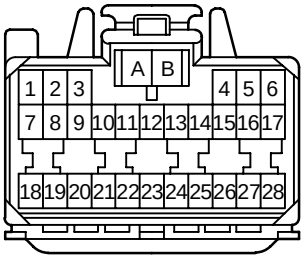

A19
YELLOW

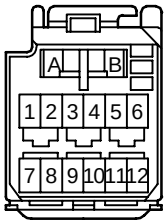

A20
YELLOW

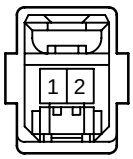

A21
YELLOW

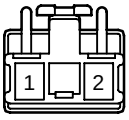

A22
BLACK



A23

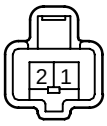

A24



B1
GRAY



B2
BLACK



B3
BLACK

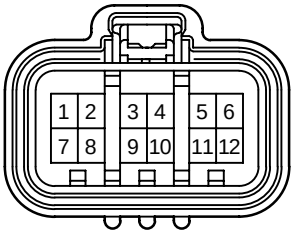

B4
GRAY



B5
BROWN

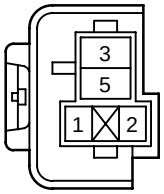

B6

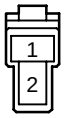

B7
BLACK

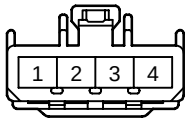

B8

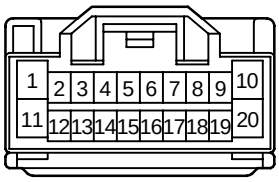

B9

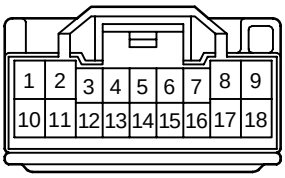

B10

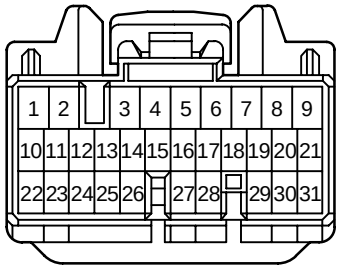

B11
BLACK

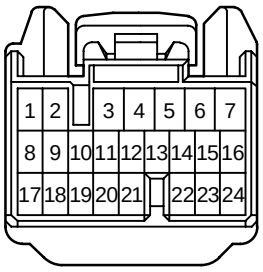

B12

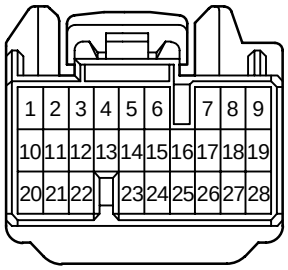

B13
BLACK

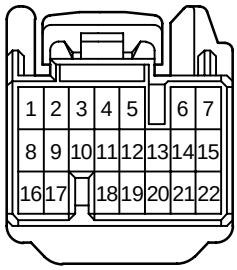

B14
BLACK

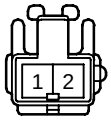

B15
BLACK

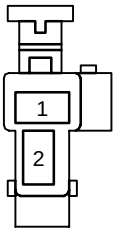

B16

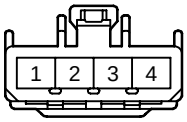

B17

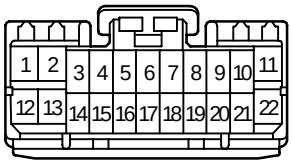

B18

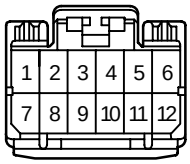

B19
BROWN

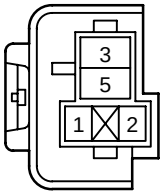

B20

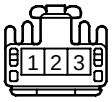

B21

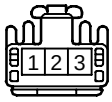

C1
BLACK



C2
BLACK



C3
YELLOW

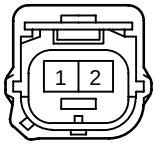

C4
GRAY



C5
GRAY

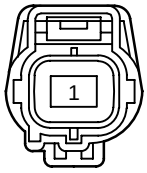

C6
BLACK

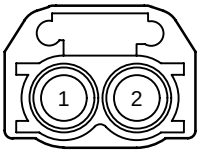

C7

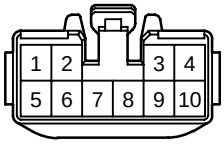

C8



C9
GRAY

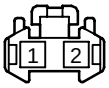

C10

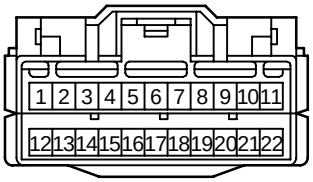

C11

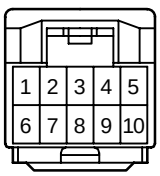

C12
BLACK

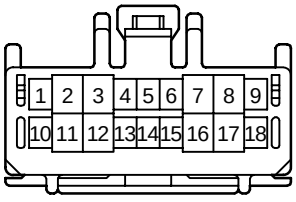

K CONNECTOR LIST

C13

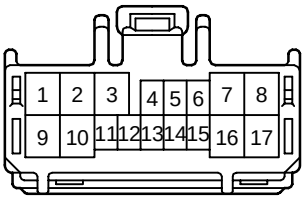

C14

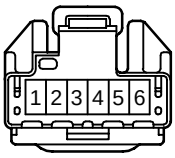

D1
GRAY

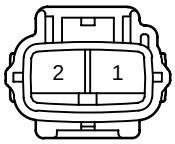

D2

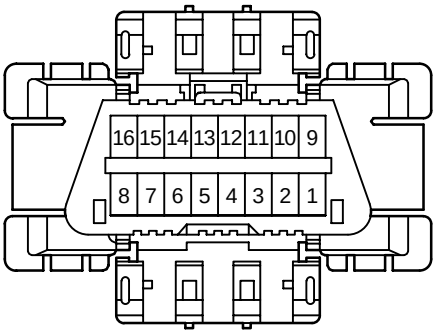

D3

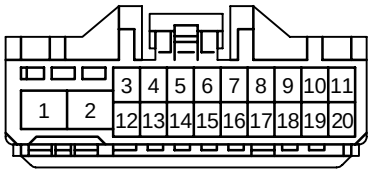

D4
BLACK

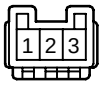

D5
BLACK



D6



D7



D8



D9



D10

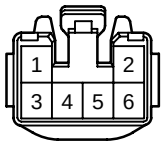

D11
BLACK



D12
BLACK



D13
BLACK

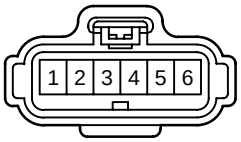

D14
BLACK

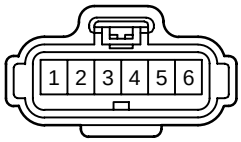

E1
DARK GRAY



E2



E3

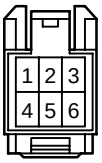

E4

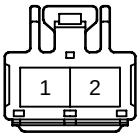

E5
GRAY



E6

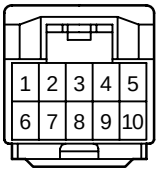

E7
BLACK

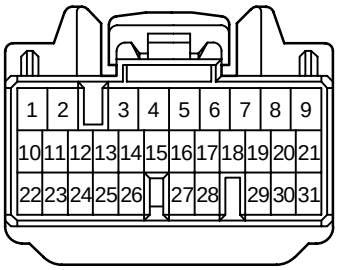

E8
BLACK

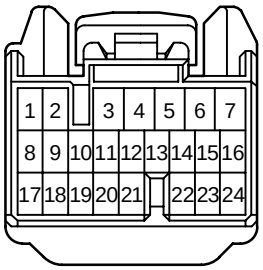

E9
BLACK

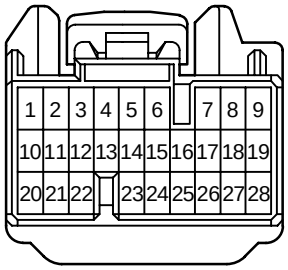

E10
BLACK

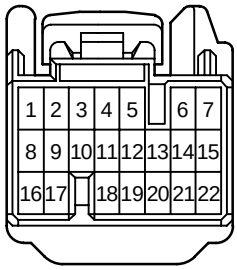

F1
YELLOW

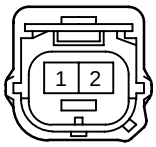

F2
YELLOW

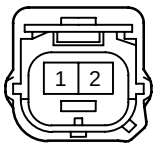

F3
GRAY



F4
GRAY



F5
GRAY



F6
GRAY



F7
GRAY

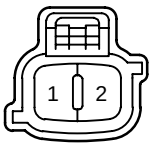

F8
GRAY

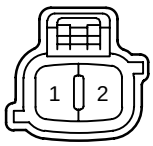

F9
GRAY

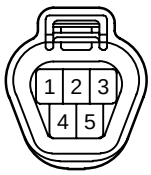

F10

(See Page 22)

F11

(See Page 22)

F12

(See Page 22)

F13

(See Page 22)

F14

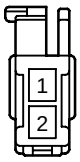

F15

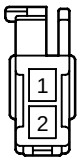

F16
GRAY

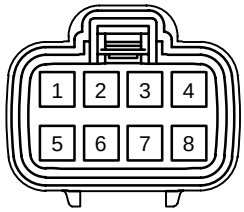

F17

(See Page 23)

F18

(See Page 23)

G1
GRAY

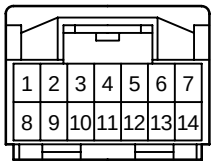

H1
GRAY

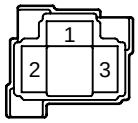

H2
GRAY

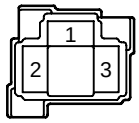

H3
DARK GRAY

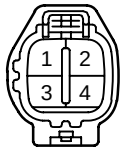

H4
BLACK

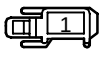

H5
BLACK

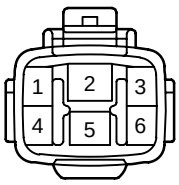

H6
GRAY

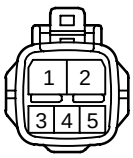

H7

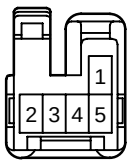

H8

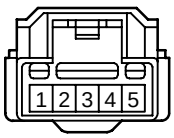

H9



K CONNECTOR LIST

H10

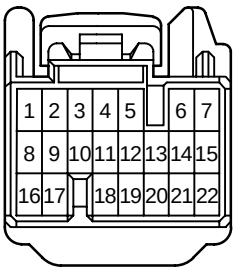

H11
BLACK

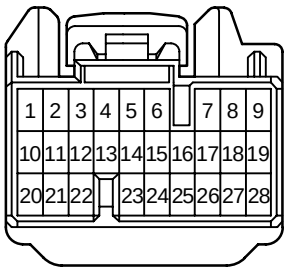

H12

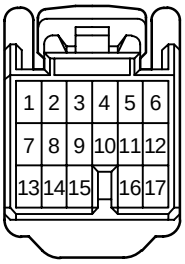

H13
BLACK

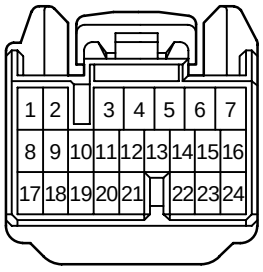

H14

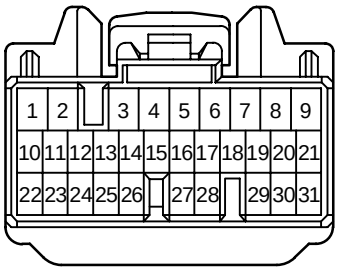

H15



H16

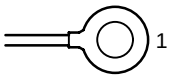

H17

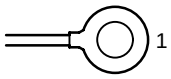

I1
BLACK

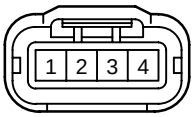

I2
GRAY

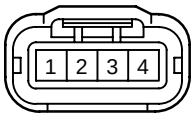

I3
BLACK

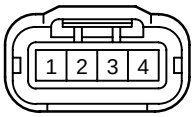

I4
GRAY

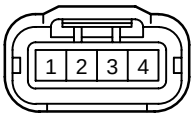

I5
BLACK

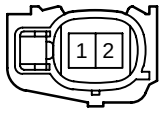

I6
GRAY

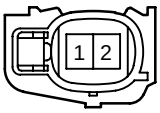

I7
BLACK

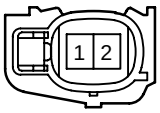

I8
GRAY

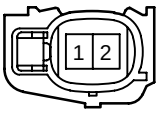

I9
GRAY



I10
GRAY



I11
GRAY



I12
GRAY

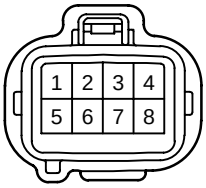

I13



I14



I15

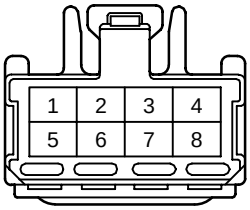

I16
BLACK

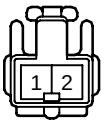

I17

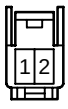

J1

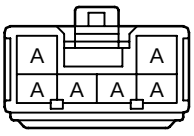

J2

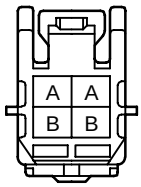

J3

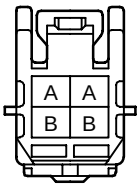

J4

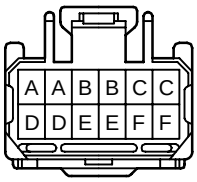

J5

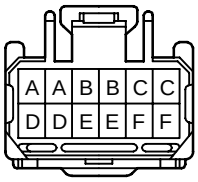

J6
(w/ Daytime Running Light)

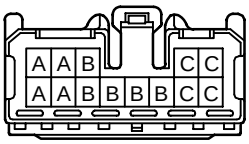

J6
(w/o Daytime Running Light)

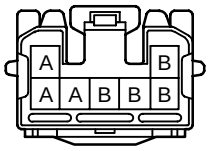

J7
BLUE



J8
GRAY

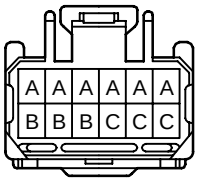

J9
GRAY

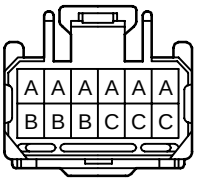

J10
BLACK

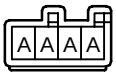

J11

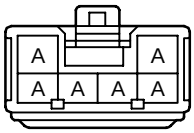

J12

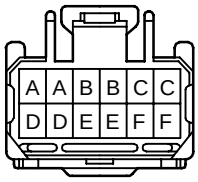

J13

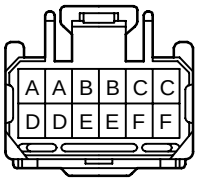

J14
BLACK

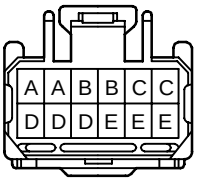

J15
BLACK

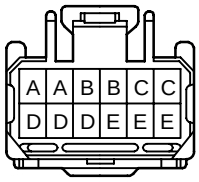

J16

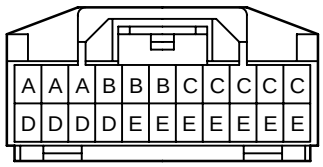

J17

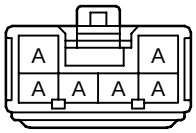

J18
GRAY

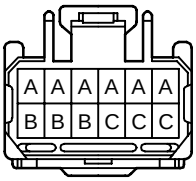

J19
GRAY

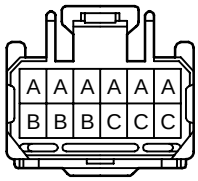

J20

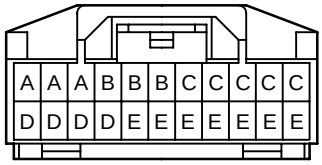

J21

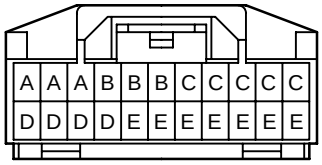

J22
BLACK

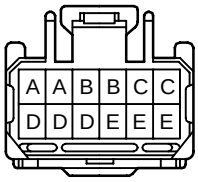

J23
BLACK

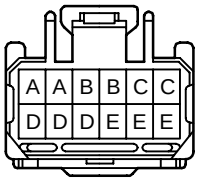

J24
GRAY

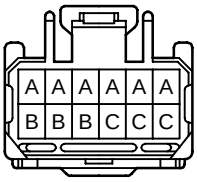

J25
GRAY

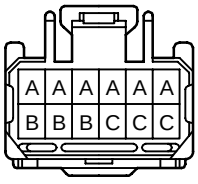

J26

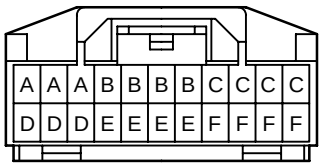

J27
BLUE

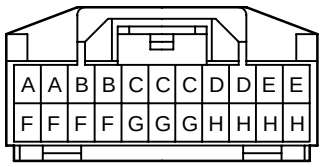

K CONNECTOR LIST

J28
BLUE

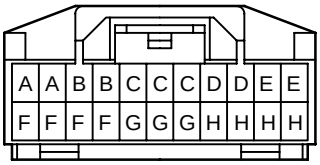

J29
BLACK



J30
BLACK

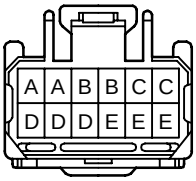

J31
BLACK

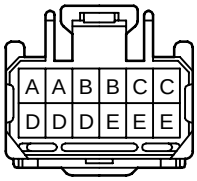

J32
GRAY

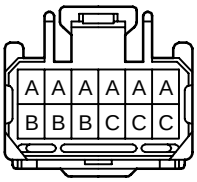

J33
GRAY

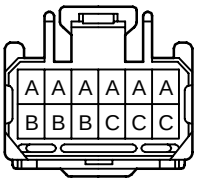

K1
DARK GRAY



L1

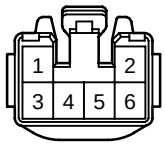

L2
GRAY



L3
GRAY



L4

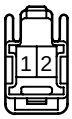

L5



L6



M1
BLACK

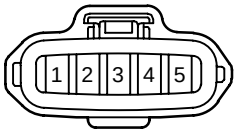

M2
GRAY

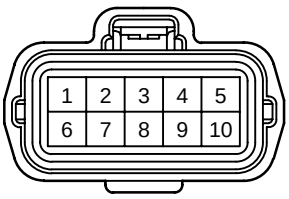

M3
GRAY



M4
GRAY



M5

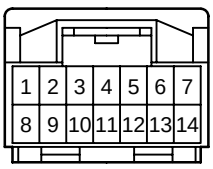

M6
BLUE

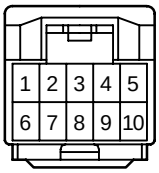

M7
BLUE

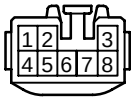

N1
GRAY

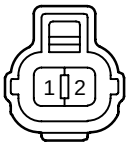

N2

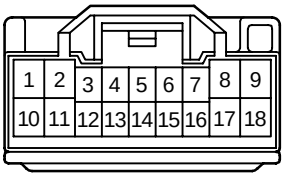

N3

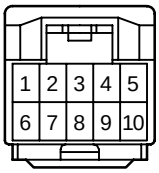

N4

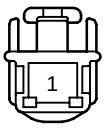

O1
BLACK



P1

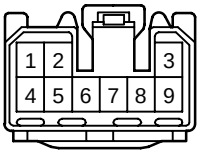

P2



P3

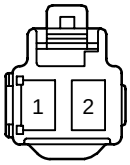

P4

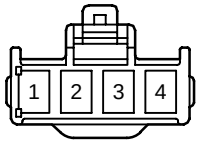

P5

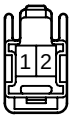

P6

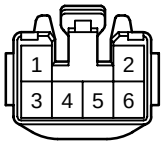

P7
GRAY

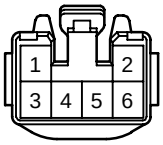

P8

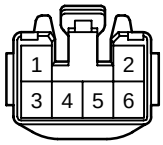

P9
BLUE

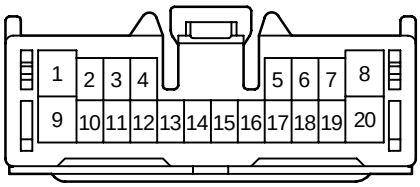

P10
BLACK

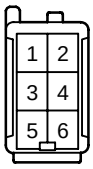

P11

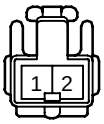

P12

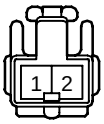

P13

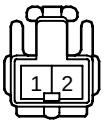

P14

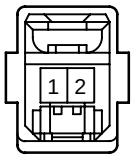

P15

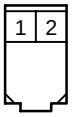

R1
BLACK



R2

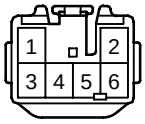

R3

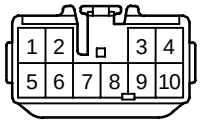

R4

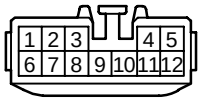

R5

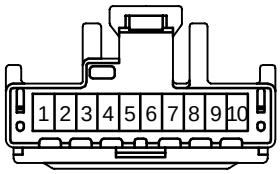

R6

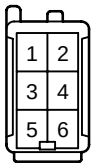

R7

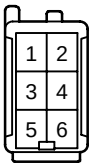

R8

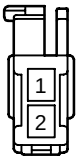

R9



R10

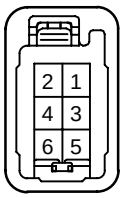

R11

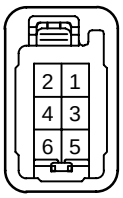

S1
GRAY



S2

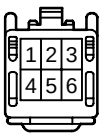

S3

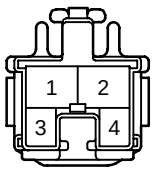

S4
YELLOW

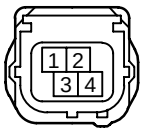

S5
YELLOW

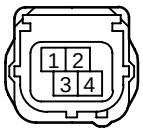

S6
YELLOW



S7
YELLOW



S8

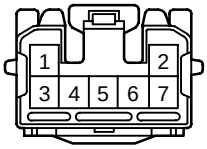

S9

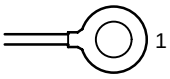

S10

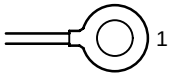

S11

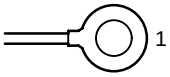

S12

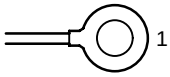

T1
BLACK

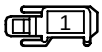

T2
BLACK



T3
BLACK

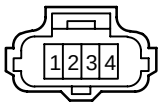

T4

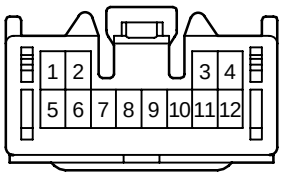

T5
BLACK



T6

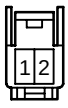

U1

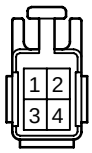

K CONNECTOR LIST

V1
BLACK

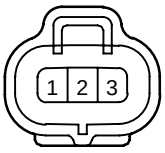

V2
BLUE

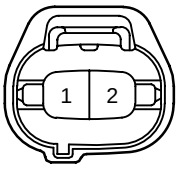

V3
BROWN

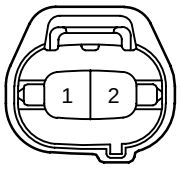

V4
BLACK



V5
BLACK

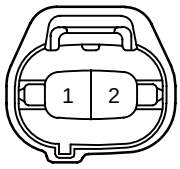

V6
BLUE



W1
BLACK

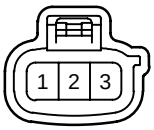

W2
BLACK



W3
GRAY



W4
DARK GRAY



W5

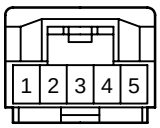

L PART NUMBER OF CONNECTORS

Code	Part Name	Part Number
A 1	A/C Condenser Fan Motor	90980–11237
A 2	A/C Magnetic Clutch and Lock Sensor	90980–10942
A 3	A/C Triple Pressure SW (A/C Dual and Single Pressure SW)	90980–10943
A 4	ABS Speed Sensor Front LH	90980–11003
A 5	ABS Speed Sensor Front RH	
A 6	Ambient Temp. Sensor	90980–11070
A 7	A/C Amplifier	90980–11911
A 8	A/C Amplifier	90980–11913
A 9	A/C Amplifier	90980–11927
A10	A/C Room Temp. Sensor	90980–11919
A11	A/C Solar Sensor	
A12	A/C Thermistor	
A13	Accel Position Sensor	90980–11144
A14	Air Inlet Control Servo Motor	90980–11921
A15	Air Mix Control Servo Motor	90980–11909
A16	Air Vent Mode Control Servo Motor	
A17	Airbag Sensor Assembly	90980–11869
A18	Airbag Sensor Assembly	90980–11872
A19	Airbag Sensor Assembly	90980–11867
A20	Airbag Squib (Front Passenger Airbag Assembly)	90980–11884
A21	Airbag Squib (Steering Wheel Pad)	90980–10850
A22	Ashtray Illumination	90980–12111
A23	ABS Speed Sensor Rear LH	90980–11060
A24	ABS Speed Sensor Rear RH	
B 1	Brake Actuator	90980–11087
B 2	Brake Actuator	90980–11161
B 3	Brake Actuator	90980–11698
B 4	Brake Fluid Level Warning SW	90980–11207
B 5	Back–Up Light Relay	82660–20340
B 6	Blower Motor	90980–10214
B 7	Blower Motor Linear Controller	90980–11676
B 8	Body ECU	90980–11971
B 9	Body ECU	90980–11973
B10	Brake ECU	90980–11935
B11	Brake ECU	90980–11476
B12	Brake ECU	90980–11637
B13	Brake ECU	90980–11638
B14	Brake Warning Buzzer	90980–10906
B15	Battery Blower Motor	82824–47130
B16	Battery Blower Motor Controller	90980–11676
B17	Battery ECU	90980–11392
B18	Battery ECU	90980–11424
B19	Battery Fan Relay	82660–20340

Code	Part Name	Part Number
B20	Buckle SW and Tension Reducer LH	90980–11471
B21	Buckle SW RH and Seat Belt Warning Occupant Detection Sensor	
C 1	Camshaft Position Sensor	90980–10947
C 2	Camshaft Timing Oil Control Valve	90980–11162
C 3	Circuit Breaker Sensor	90980–11898
C 4	Converter	90980–10942
C 5	Converter	90980–11963
C 6	Crankshaft Position Sensor	90980–12028
C 7	Center Cluster SW	90980–10801
C 8	Cigarette Lighter	90980–10760
C 9	Cigarette Lighter Illumination	90980–11148
C10	Combination Meter	90980–11927
C11	Combination Meter	90980–11923
C12	Combination SW	90980–11594
C13	Combination SW	90980–11672
C14	Combination SW	90980–11616
D 1	DC Motor	90980–10838
D 2	Data Link Connector 3	90980–11665
D 3	Daytime Running Light Relay	90980–12034
D 4	Diode (Door Courtesy)	90980–11251
D 5	Diode (Daytime Running Light)	90980–10962
D 6	Door Courtesy SW Front LH	90980–10871
D 7	Door Courtesy SW Front RH	
D 8	Door Courtesy SW Rear LH	
D 9	Door Courtesy SW Rear RH	
D10	Door Lock Control SW Front RH	90980–10797
D11	Door Lock Motor and Door Unlock Detection SW Rear LH	90980–11150
D12	Door Lock Motor and Door Unlock Detection SW Rear RH	
D13	Door Lock Motor, Door Key Lock and Unlock SW and Door Unlock Detection SW Front LH	90980–11858
D14	Door Lock Motor, Door Key Lock and Unlock SW and Door Unlock Detection SW Front RH	
E 1	Engine Coolant Temp. Sensor	90980–10737
E 2	Engine Hood Courtesy SW	90980–11189
E 3	EMPS ECU	90980–12012
E 4	EMPS ECU	90980–11579
E 5	EMPS ECU	90980–12120
E 6	EMPS ECU	90980–11923
E 7	Engine Control Module	90980–11421
E 8	Engine Control Module	90980–11476
E 9	Engine Control Module	90980–11637

Note: Not all of the above part numbers of the connector are established for the supply.

Code	Part Name	Part Number
E10	Engine Control Module	90980–11638
F 1	Front Airbag Sensor LH	90980–11856
F 2	Front Airbag Sensor RH	
F 3	Front Parking Light LH	90980–11162
F 4	Front Parking Light RH	
F 5	Front Side Marker Light LH	
F 6	Front Side Marker Light RH	
F 7	Front Turn Signal Light LH	90980–11019
F 8	Front Turn Signal Light RH	
F 9	Front Wiper Motor	90980–11599
F10	Fusible Link Block No.1	–
F11	Fusible Link Block No.1	
F12	Fusible Link Block No.1	
F13	Fusible Link Block No.1	90980–11775
F14	Front Door Speaker LH	90980–10935
F15	Front Door Speaker RH	
F16	Fuel Pump and Fuel Sender	90980–12164
F17	Fusible Link Block No.2	90980–10916
F18	Fusible Link Block No.2	90980–11775
G 1	Gateway ECU	90980–11911
H 1	Headlight LH	90980–11314
H 2	Headlight RH	
H 3	Heated Oxygen Sensor (Bank 1 Sensor1)	90980–11028
H 4	Horn	90980–10619
H 5	Hydraulic Booster	90980–10939
H 6	Hydraulic Booster	90980–10946
H 7	Hazard Warning SW	90980–11319
H 8	Hazard Warning SW	90980–11921
H 9	Heated Oxygen Sensor (Bank 1 Sensor 2)	90980–11028
H10	Hybrid Vehicle Control ECU	90980–11638
H11	Hybrid Vehicle Control ECU	90980–11637
H12	Hybrid Vehicle Control ECU	90980–11586
H13	Hybrid Vehicle Control ECU	90980–11476
H14	Hybrid Vehicle Control ECU	90980–11421
H15	High Mounted Stop Light	90980–11060
H16	Hybrid Vehicle Battery	–
H17	Hybrid Vehicle Battery	
I 1	Ignition Coil and Igniter No.1	90980–11885
I 2	Ignition Coil and Igniter No.2	
I 3	Ignition Coil and Igniter No.3	
I 4	Ignition Coil and Igniter No.4	
I 5	Injector No.1	90980–11875
I 6	Injector No.2	
I 7	Injector No.3	
I 8	Injector No.4	
I 9	Inverter	90980–11034

Code	Part Name	Part Number
I10	Inverter	90980–10891
I11	Inverter	90980–10988
I12	Inverter	90980–10897
I13	Inverter	90980–11943
I14	Inverter	90980–11944
I15	Ignition SW	90980–11615
I16	Interior Light	90980–10860
I17	Interlock SW	90980–11918
J 1	Junction Connector	90980–10976
J 2	Junction Connector	90980–11742
J 3	Junction Connector	
J 4	Junction Connector	90980–11661
J 5	Junction Connector	
J 6	Junction Connector (w/ Daytime Running Light)	90980–11542
	Junction Connector (w/o Daytime Running Light)	90980–11529
J 7	Junction Connector	90980–10803
J 8	Junction Connector	90980–11661
J 9	Junction Connector	
J10	Junction Connector	90980–11398
J11	Junction Connector	90980–10976
J12	Junction Connector	90980–11661
J13	Junction Connector	
J14	Junction Connector	
J15	Junction Connector	
J16	Junction Connector	90980–11915
J17	Junction Connector	90980–10976
J18	Junction Connector	90980–11661
J19	Junction Connector	
J20	Junction Connector	90980–11915
J21	Junction Connector	
J22	Junction Connector	90980–11661
J23	Junction Connector	
J24	Junction Connector	
J25	Junction Connector	
J26	Junction Connector	90980–11915
J27	Junction Connector	
J28	Junction Connector	
J29	Junction Connector	90980–11396
J30	Junction Connector	90980–11661
J31	Junction Connector	
J32	Junction Connector	
J33	Junction Connector	
K 1	Knock Sensor	90980–11166
L 1	Light Control Rheostat	90980–10797

L PART NUMBER OF CONNECTORS

Code	Part Name	Part Number
L 2	License Plate Light LH	90980–11148
L 3	License Plate Light RH	
L 4	Luggage Compartment Door Unlock SW	90980–11212
L 5	Luggage Compartment Light	90980–11148
L 6	Luggage Compartment Light SW	90980–11097
M 1	Mass Air Flow Meter	90980–11317
M 2	Motor Generator No.1	90980–11658
M 3	Motor Generator No.2	90980–11034
M 4	Motor Generator No.2	90980–11143
M 5	Multi Display	90980–11911
M 6	Multi Display	90980–11923
M 7	Multi Display	90980–10799
N 1	Noise Filter (Ignition)	90980–10843
N 2	Navigation ECU	90980–11973
N 3	Navigation ECU	90980–11923
N 4	Noise Filter (Rear Window Defogger)	90980–11259
O 1	Oil Pressure SW	90980–11363
P 1	Park/Neutral Position SW	90980–11535
P 2	Parking Brake SW	90980–11147
P 3	PTC Heater	90980–10903
P 4	PTC Heater	90980–10867
P 5	Personal Light	90980–11212
P 6	Power Window Control SW Front RH	90980–10797
P 7	Power Window Control SW Rear LH	
P 8	Power Window Control SW Rear RH	
P 9	Power Window Master SW	90980–11469
P10	Power Window Motor Front LH	90980–11011
P11	Power Window Motor Front RH	90980–10860
P12	Power Window Motor Rear LH	
P13	Power Window Motor Rear RH	
P14	Pretensioner LH	90980–11884
P15	Pretensioner RH	90980–11862
R 1	Radiator Fan Motor	90980–11237
R 2	Radio and Player	90980–10996
R 3	Radio and Player	90980–10997
R 4	Radio and Player	90980–10903
R 5	Remote Control Mirror SW	90980–11657
R 6	Rear Combination Light LH	90980–11011
R 7	Rear Combination Light RH	
R 8	Rear Speaker LH	90980–10935
R 9	Rear Speaker RH	
R10	Remote Control Mirror LH	90980–11587
R11	Remote Control Mirror RH	
S 1	Steering Shaft Torque Sensor	90980–10942
S 2	Shift Lock ECU	90980–11488
S 3	Stop Light SW	90980–11118

Code	Part Name	Part Number
S 4	Side Airbag Sensor LH	90980–11857
S 5	Side Airbag Sensor RH	
S 6	Side Airbag Squib LH	90980–11864
S 7	Side Airbag Squib RH	
S 8	System Main Relay	90980–11529
S 9	System Main Relay	82675–36050
S10	System Main Relay	
S11	System Main Relay	–
S12	System Main Relay	
T 1	Theft Deterrent Horn	90980–10619
T 2	Throttle Control Motor	90980–11162
T 3	Throttle Position Sensor	90980–10711
T 4	Transponder Key Computer	90980–11475
T 5	Turn Signal Flasher Relay	90980–10799
T 6	Tension Reducer Solenoid	90980–11918
U 1	Unlock Warning SW and Key Interlock Solenoid	90980–10795
V 1	Vacuum Sensor (HC Adsorber and Catalyst System)	90980–10845
V 2	VSV (EVAP)	90980–11156
V 3	VSV (HC Adsorber and Catalyst System)	90980–11149
V 4	Vapor Pressure Sensor	90980–11143
V 5	VSV (Canister Closed Valve)	90980–11156
V 6	VSV (Parge Flow Switching Valve)	90980–11859
W 1	Washer Motor	90980–10981
W 2	Water Pump Motor (A/C)	90980–10887
W 3	Water Pump Motor (Inverter)	90980–11003
W 4	Water Temp. SW	90980–11235
W 5	Wireless Door Control Receiver	90980–11909

Note: Not all of the above part numbers of the connector are established for the supply.

Code	Part Name	Part Number	Code	Part Name	Part Number

M OVERALL ELECTRICAL WIRING DIAGRAM

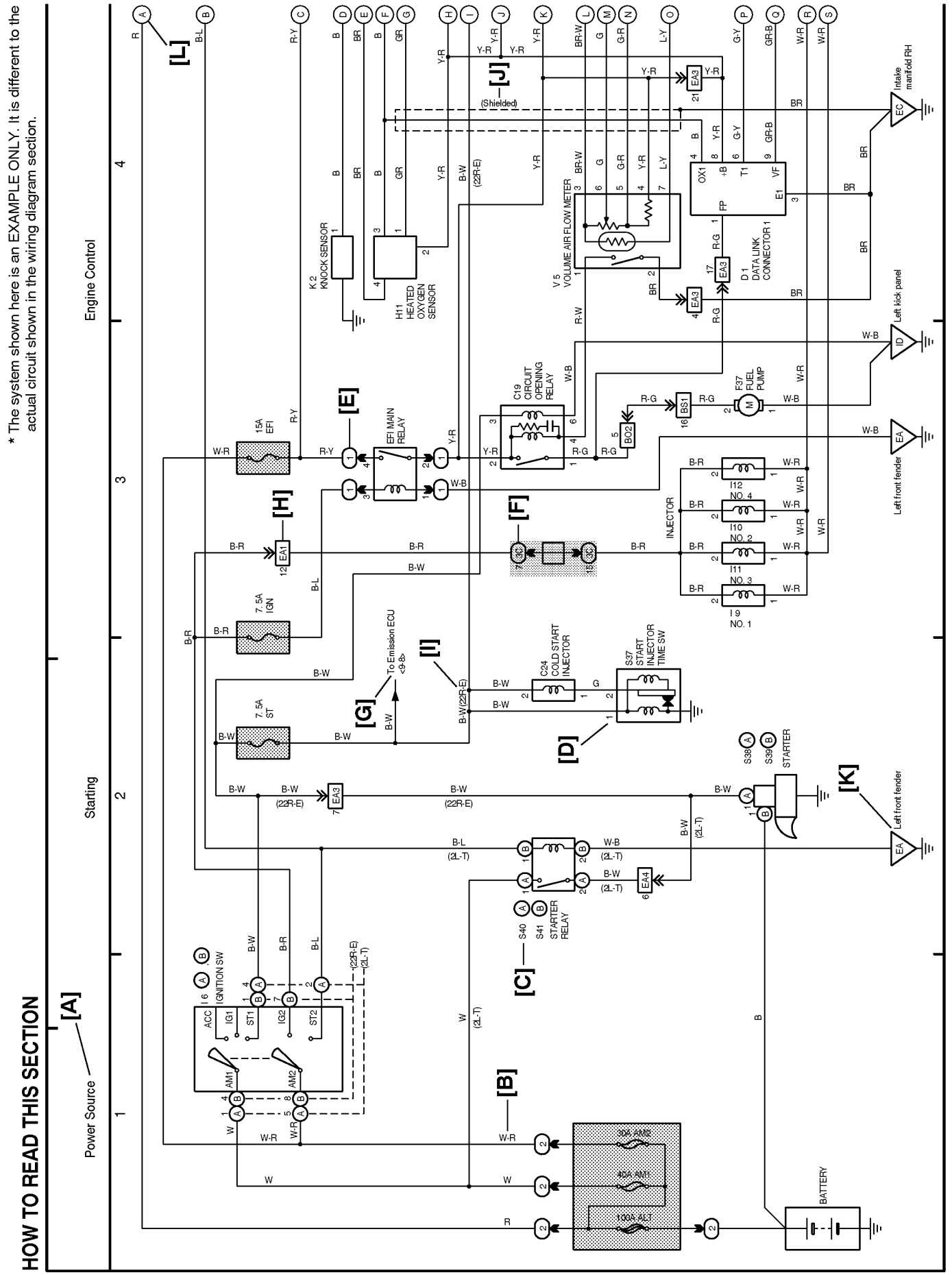

[A] : System Title

[B] : Indicates the wiring color.

Wire colors are indicated by an alphabetical code.

B	= Black	W	= White	BR	= Brown
L	= Blue	V	= Violet	SB	= Sky Blue
R	= Red	O	= Orange	LG	= Light Green
P	= Pink	Y	= Yellow	GR	= Gray
G	= Green				

The first letter indicates the basic wire color and the second letter indicates the color of the stripe.

Example: L – Y

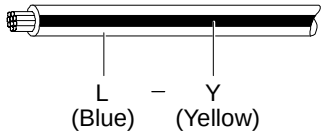

[C] : The position of the parts is the same as shown in the wiring diagram and wire routing.

[D] : Indicates the pin number of the connector. The numbering system is different for female and male connectors.

Example : Numbered in order from upper left to lower right / Numbered in order from upper right to lower left

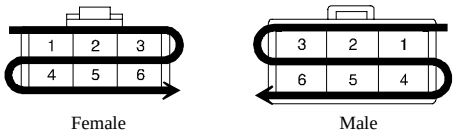

The numbering system for the overall wiring diagram is the same as above

[E] : Indicates a Relay Block. No shading is used and only the Relay Block No. is shown to distinguish it from the J/B.

Example : (1) Indicates Relay Block No.1

[F] : Junction Block (The number in the circle is the J/B No. and the connector code is shown beside it). Junction Blocks are shaded to clearly separate them from other parts.

Example:

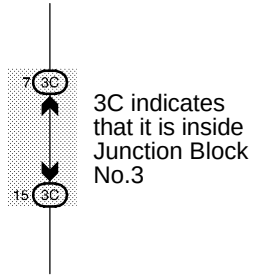

[G] : Indicates related system.

[H] : Indicates the wiring harness and wiring harness connector. The wiring harness with male terminal is shown with arrows (»). Outside numerals are pin numbers.

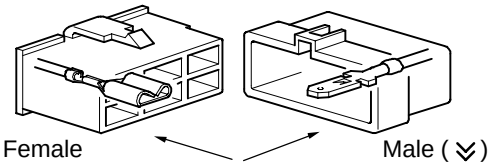

[I] : ( ) is used to indicate different wiring and connector, etc. when the vehicle model, engine type, or specification is different.

[J] : Indicates a shielded cable.



[K] : Indicates and located on ground point.

[L] : The same code occuring on the next page indicates that the wire harness is continuous.

SYSTEM INDEX

SYSTEMS	LOCATION
ABS	19–3
Air Conditioning	24–2
Back–Up Light	6–2
Cigarette Lighter	11–4
Combination Meter	23–2
Door Lock Control	15–2
Electric Tension Reducer	13–4
EMPS	20–3
Engine Control	2–3
Gateway System	14–8
Headlight (w/ Daytime Running Light)	4–2
Headlight (w/o Daytime Running Light)	3–2
Horn	12–2
Hybrid Vehicle Immobiliser System	2–16
Illumination	8–2
Interior Light	10–3
Key Reminder and Light Reminder Buzzer	9–2
Light Auto Turn Off	9–3

SYSTEMS	LOCATION
Navigation System	14–5
Power Source	1~24–1
Power Window	18–2
Radiator Fan and Condenser Fan	22–3
Radio and Player	14–2
Rear Window Defogger	22–2
Remote Control Mirror	11–2
Seat Belt Warning	9–4
Shift Lock	13–3
SRS	21–2
Stop Light	3–4
Taillight	7–2
Theft Deterrent	17–2
TOYOTA Hybrid System ∗ Charging ∗ Cruise Control ∗ Regenerative Brake	1–2
Turn Signal and Hazard Warning Light	5–2
Wiper and Washer	12–3
Wireless Door Lock Control	16–2

1 PRIUS ELECTRICAL WIRING DIAGRAM

(Cont. next page)

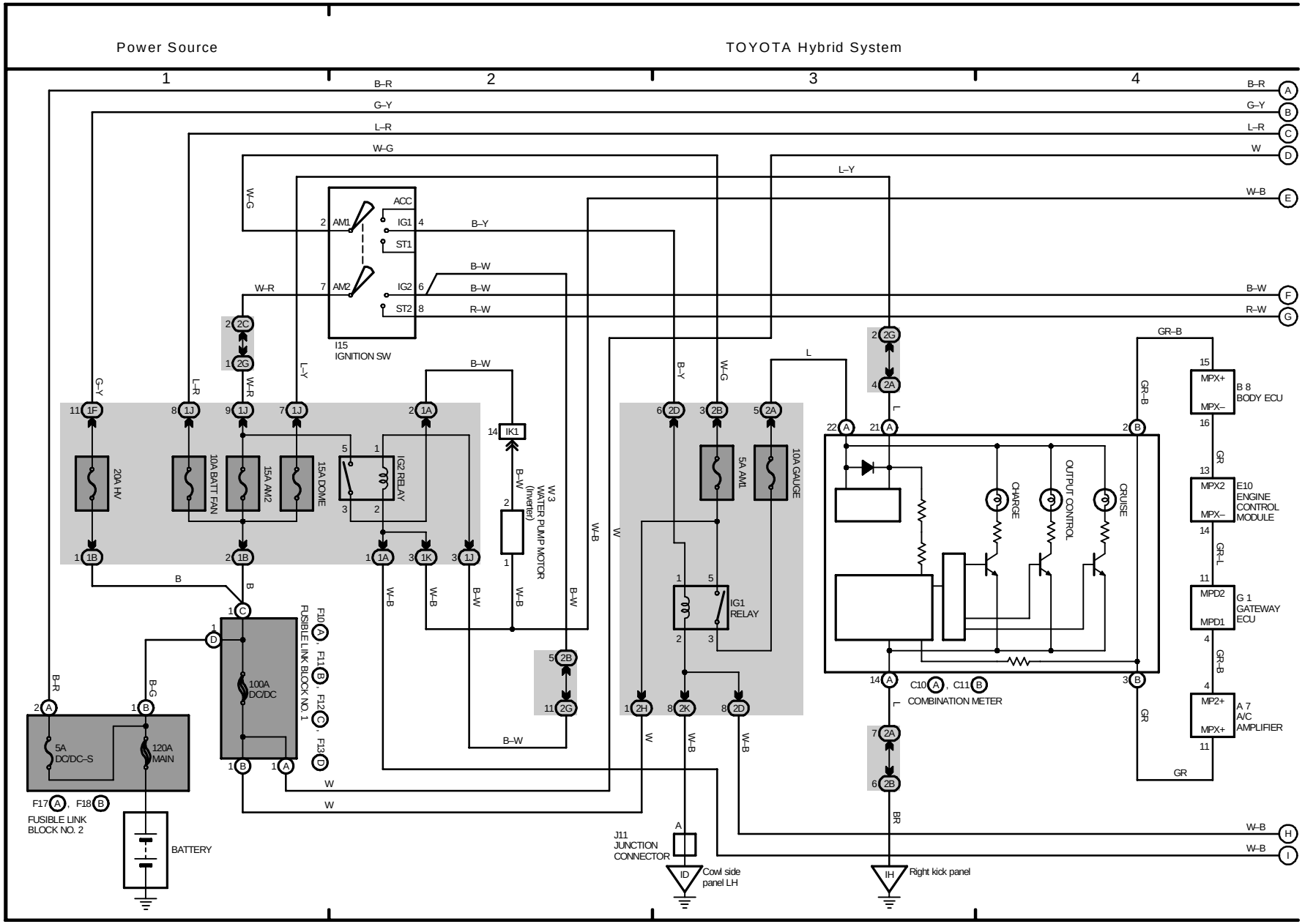

M

M OVERALL ELECTRICAL WIRING DIAGRAM

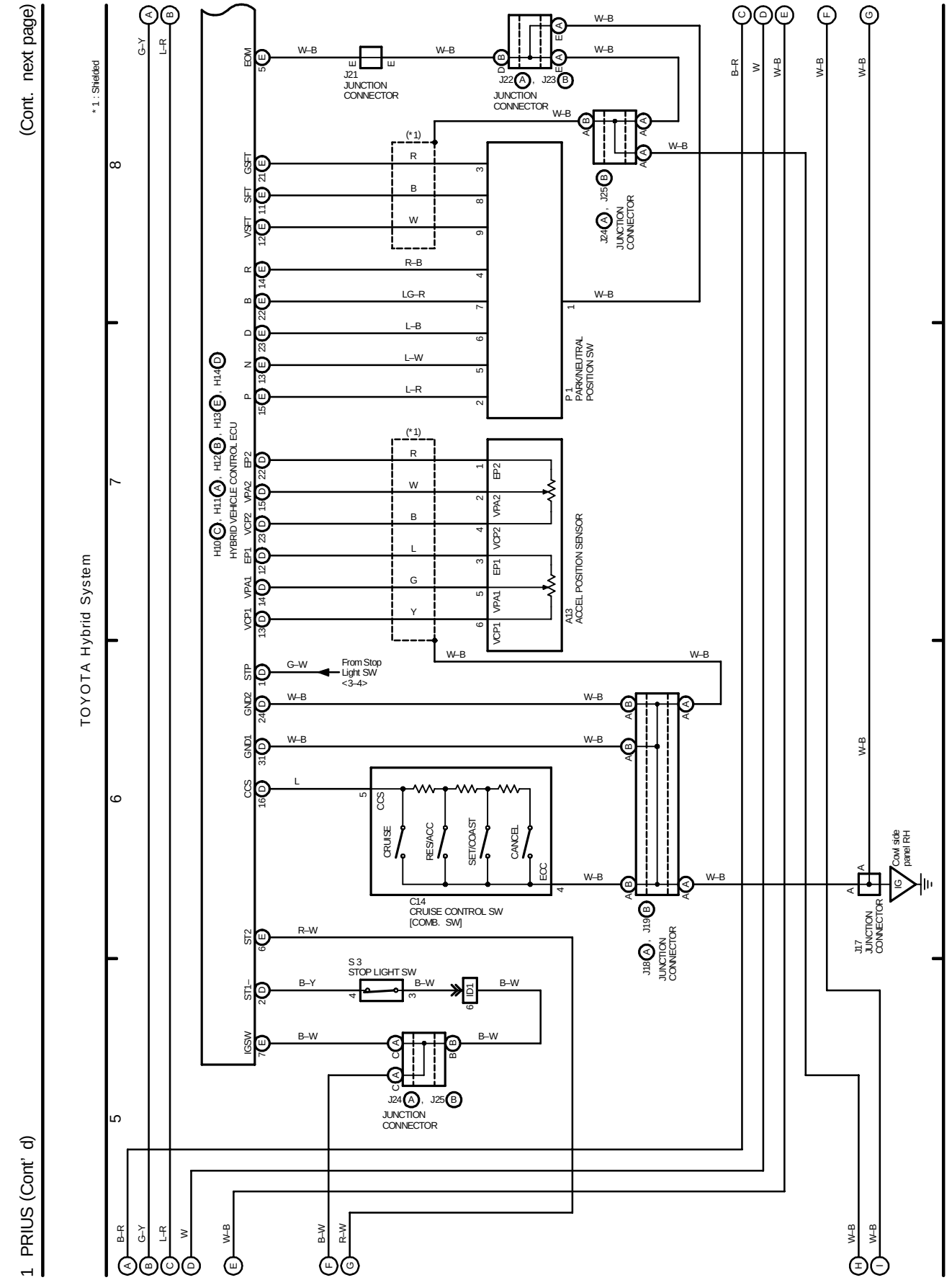

(Cont. next page)

TOYOTA Hybrid System

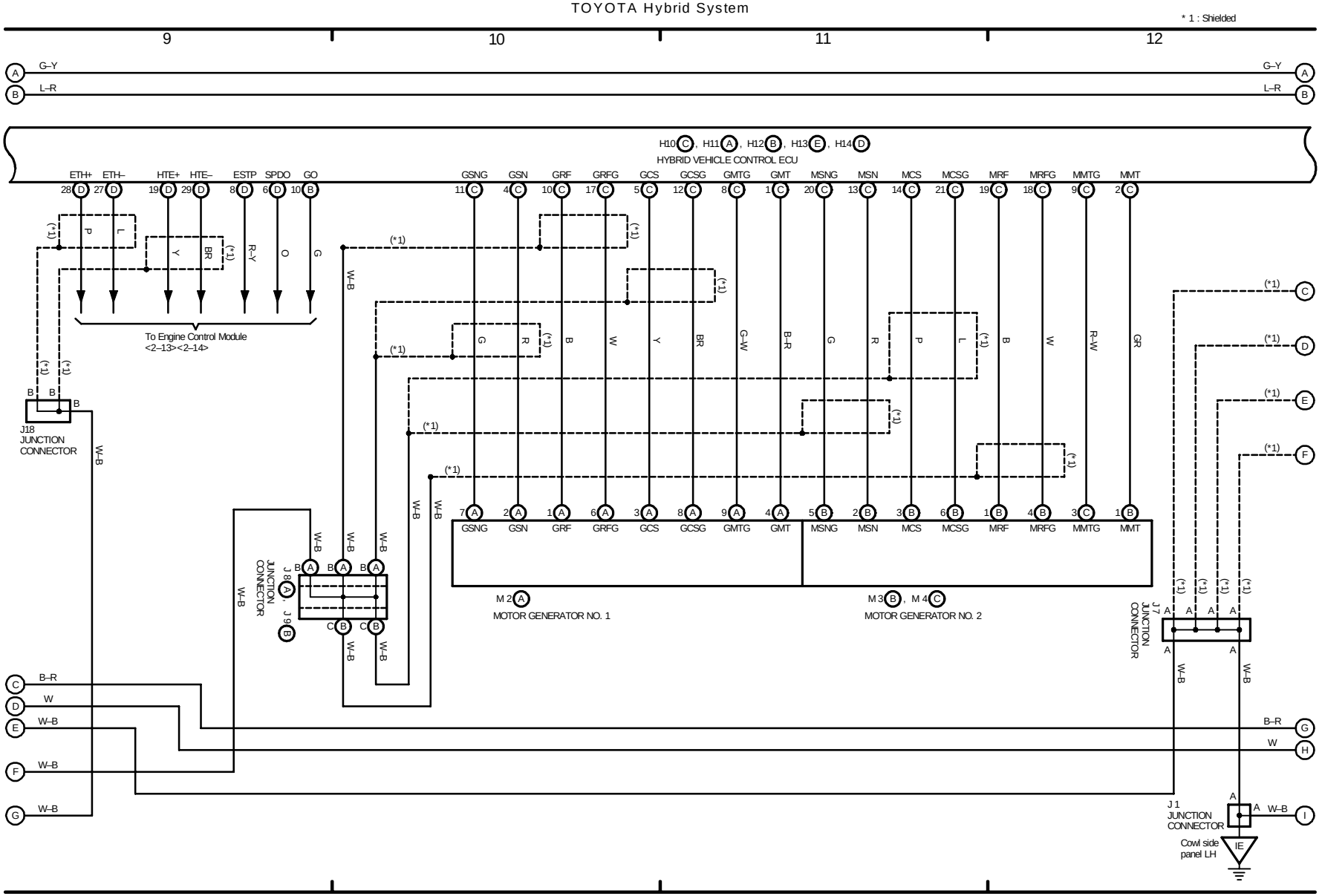

M OVERALL ELECTRICAL WIRING DIAGRAM

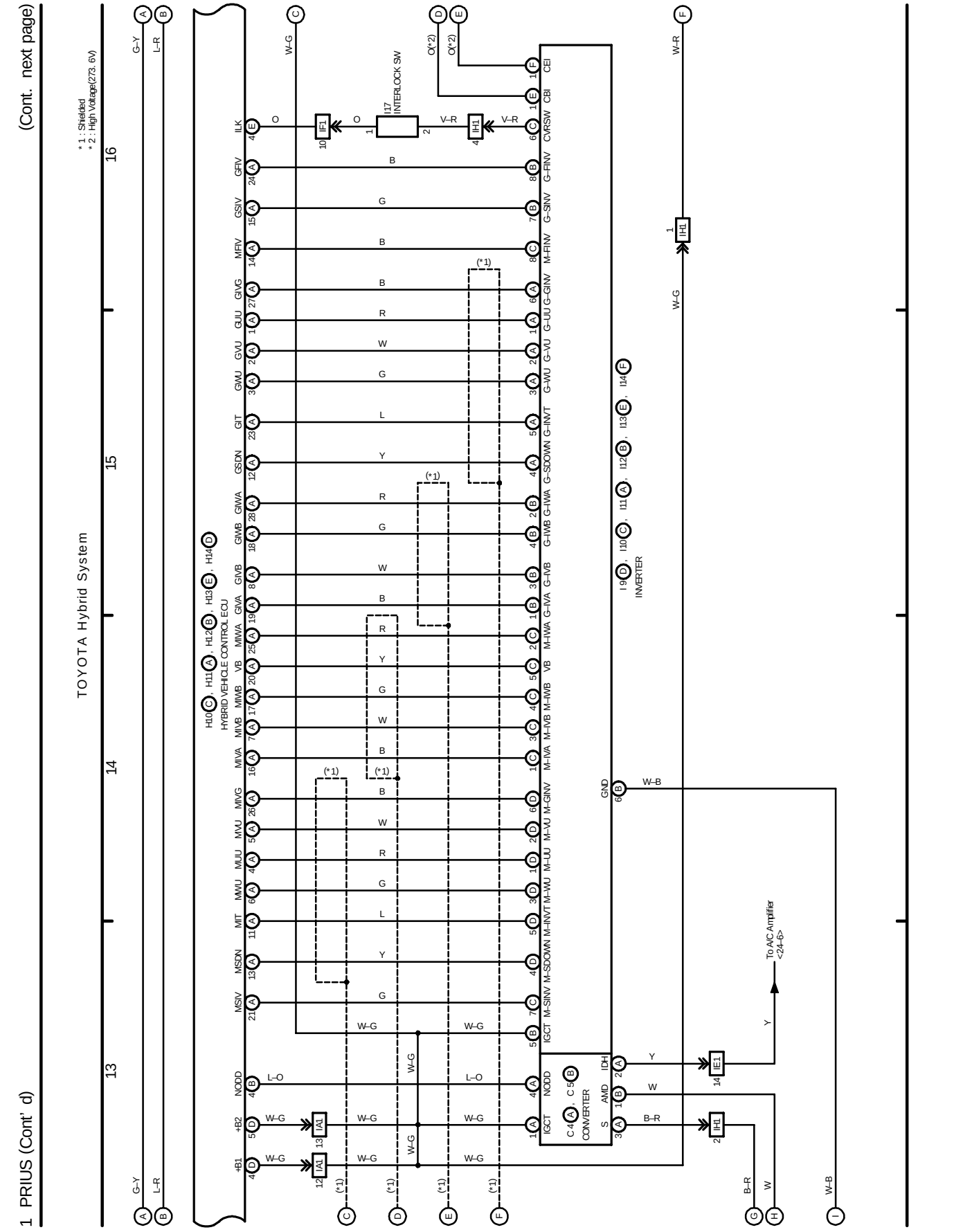

(Cont. next page)

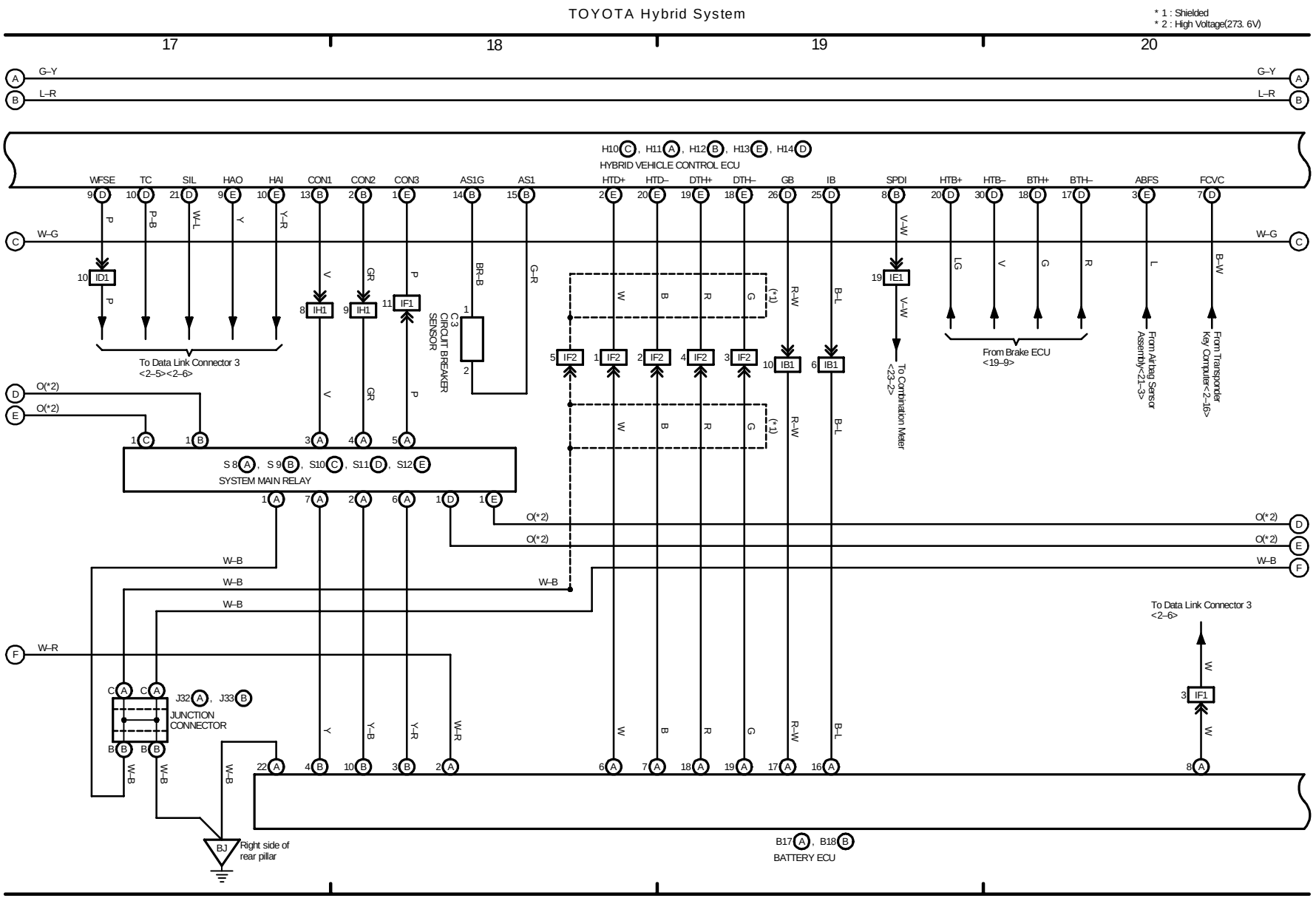

M OVERALL ELECTRICAL WIRING DIAGRAM

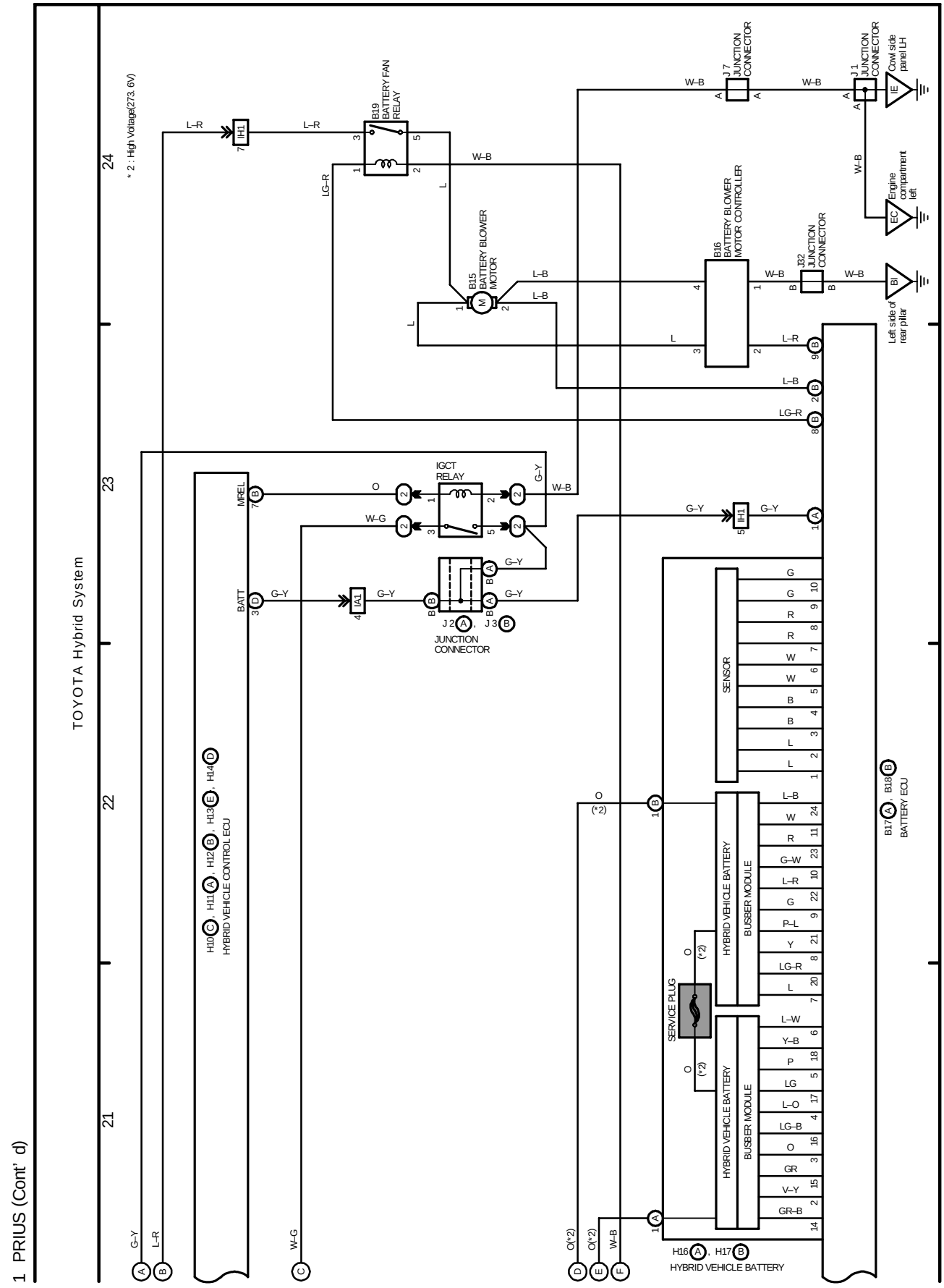

M OVERALL ELECTRICAL WIRING DIAGRAM

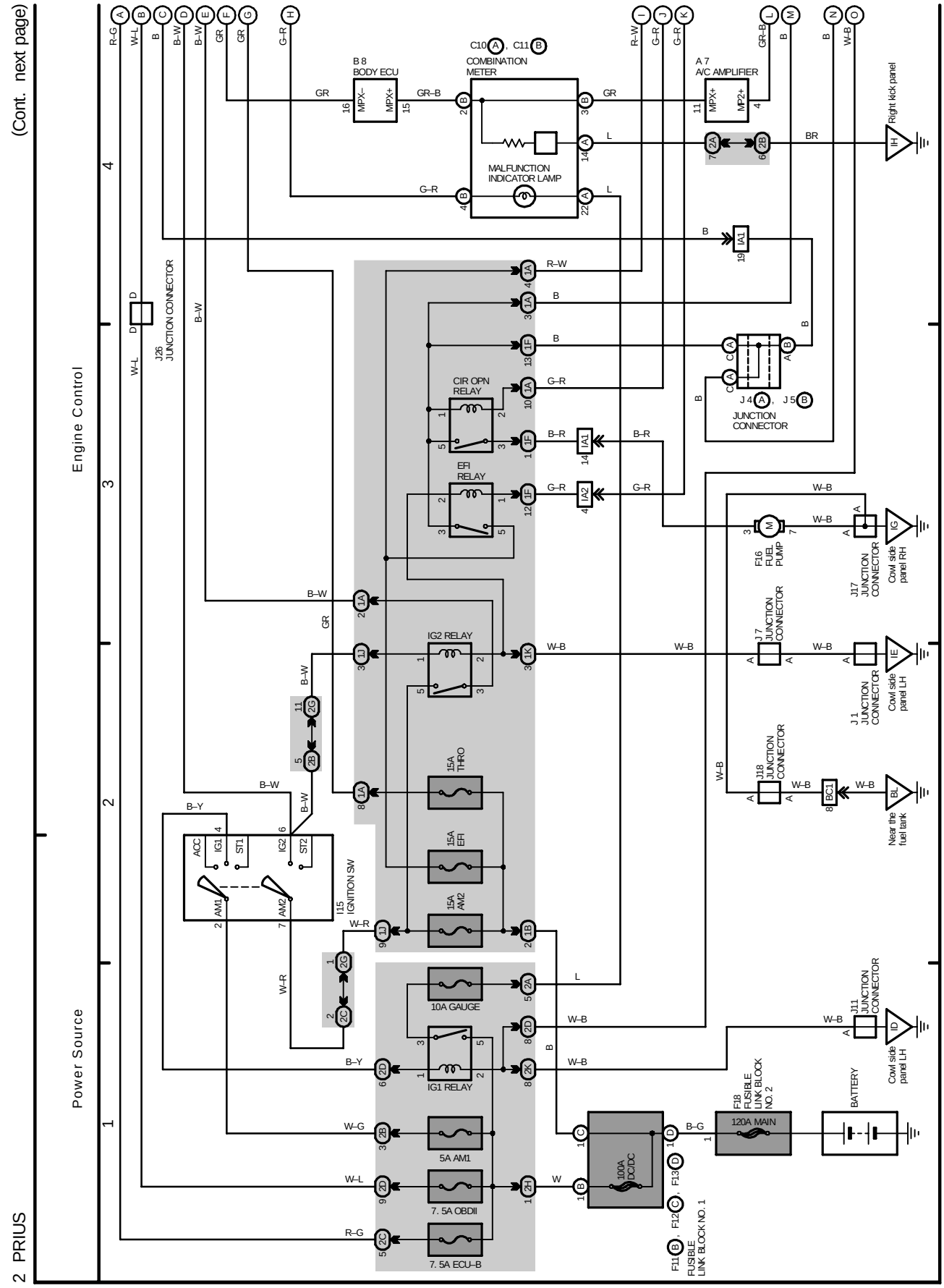

(Cont. next page)

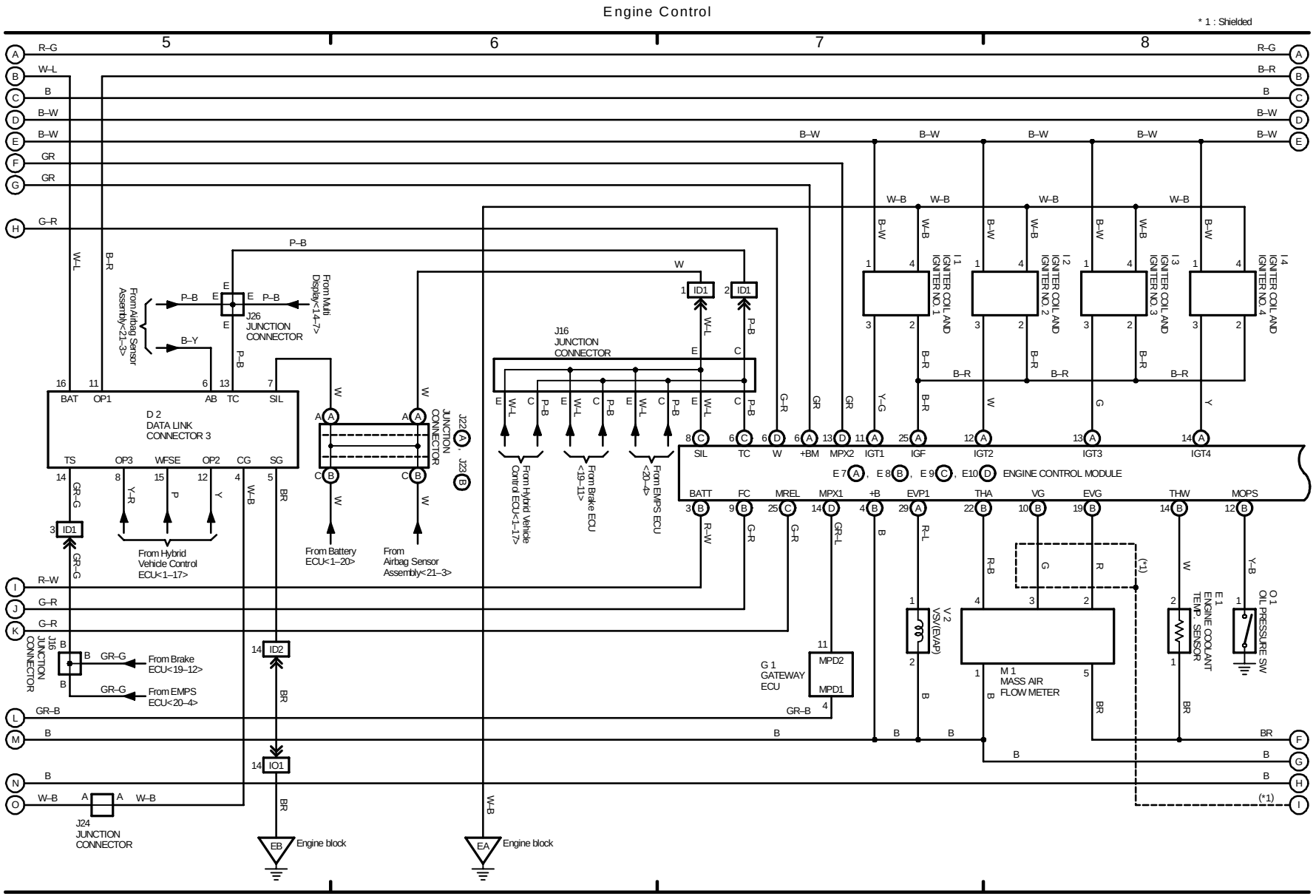

M OVERALL ELECTRICAL WIRING DIAGRAM

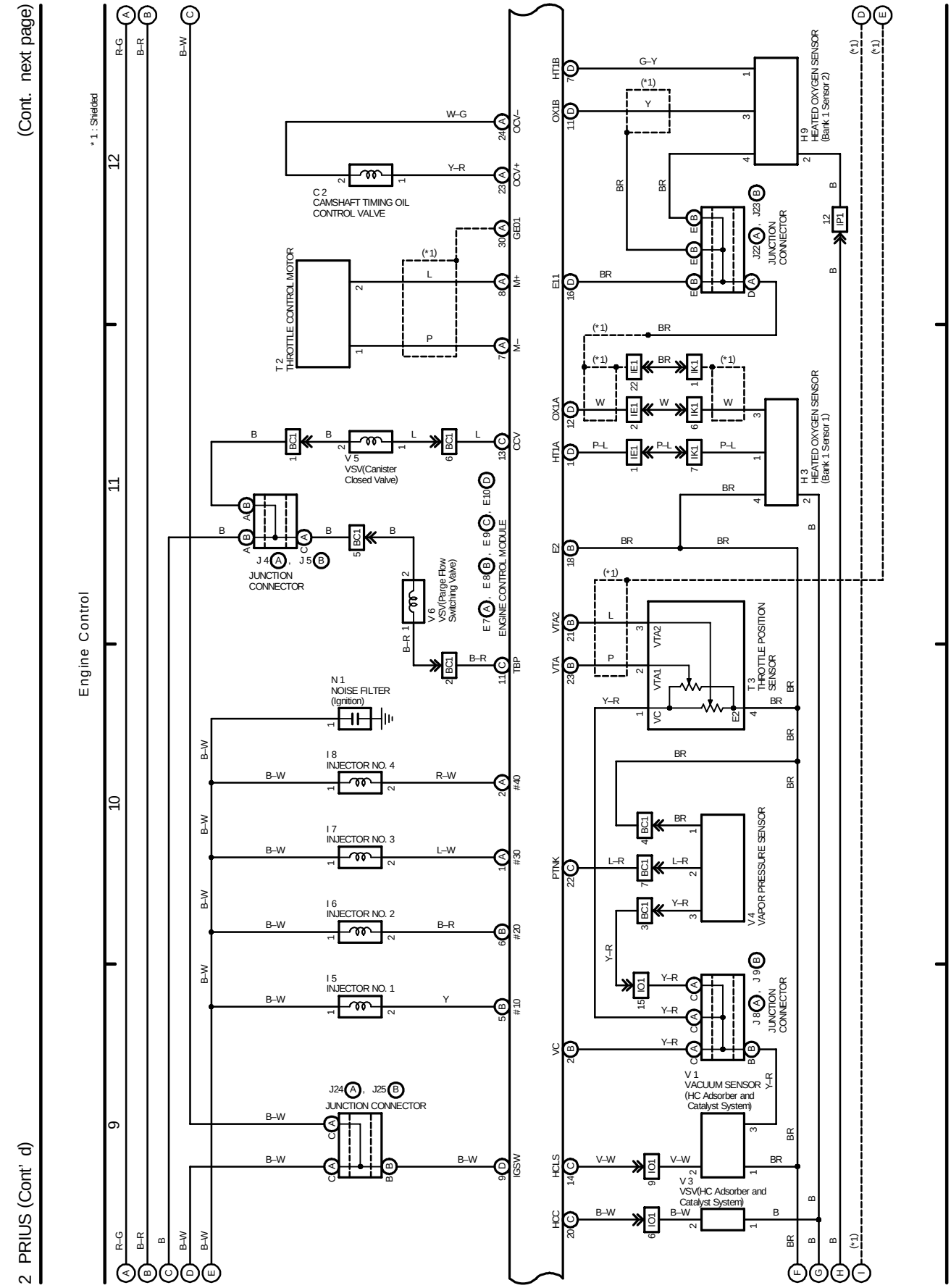

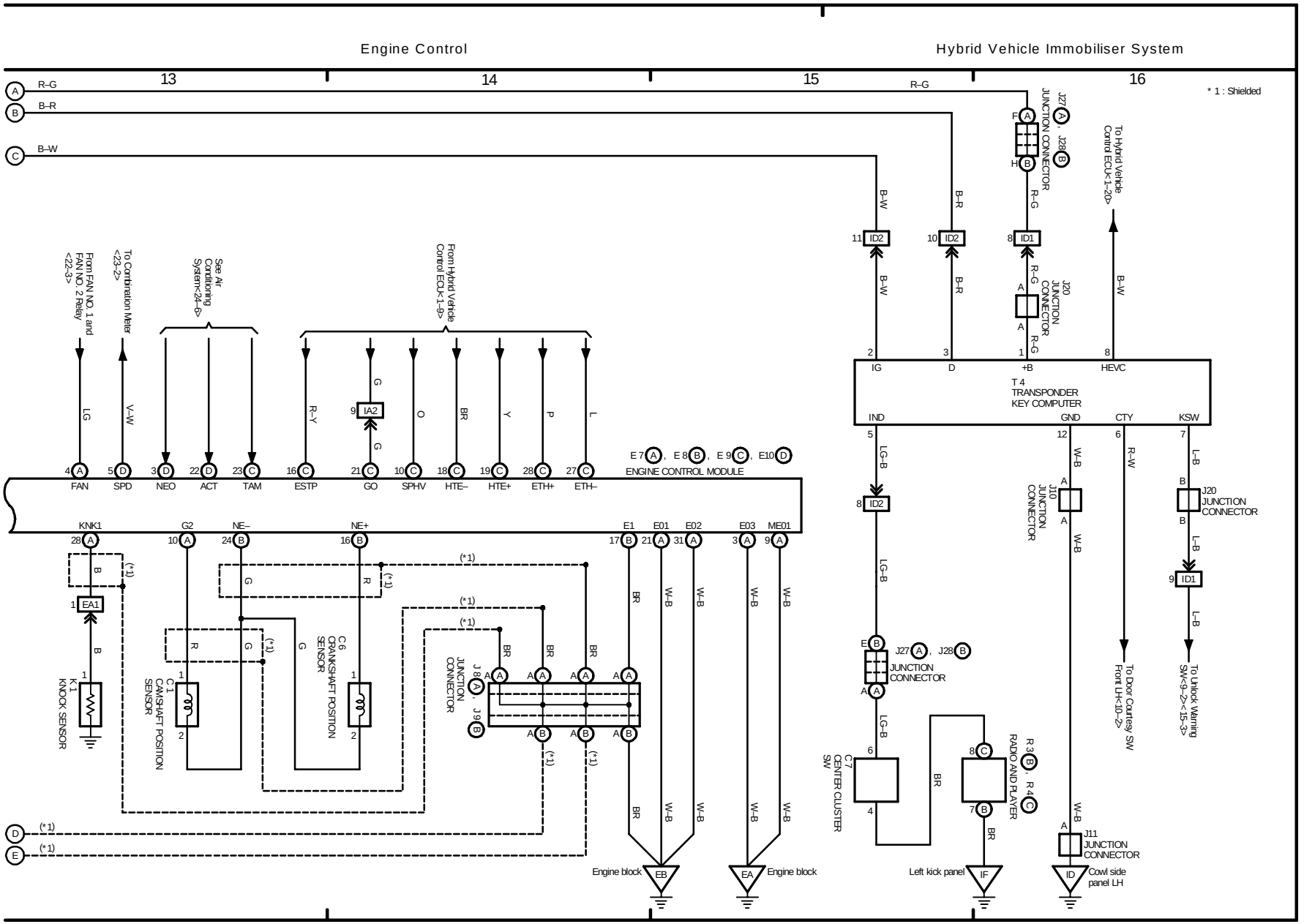
Engine Control
Hybrid Vehicle Immobiliser System
13
14
15
16
* 1 : Shielded
R–G
B–R
B–W
From FAN NO. 1 and FAN NO. 2 Relay <22-3>
To Combination Meter <23-2>
See Air Conditioning System<24-6>
From Hybrid Vehicle Control ECU<1-9>
To Hybrid Vehicle Control ECU<1-20>
J27 JUNCTION CONNECTOR
J28
J20 JUNCTION CONNECTOR
J10 JUNCTION CONNECTOR
J11 JUNCTION CONNECTOR
J8
J9
ID1
ID2
IA2
T 4 TRANSPONDER KEY COMPUTER
IG
D
+B
HEVC
IND
GND
CTY
KSW
E 7, E 8, E 9, E10
ENGINE CONTROL MODULE
FAN
SPD
NEO
ACT
TAM
ESTP
GO
SPHV
HTE–
HTE+
ETH+
ETH–
KNK1
G2
NE–
NE+
E1
E01
E02
E03
ME01
EA1
K1 KNOCK SENSOR
C1 CAMSHAFT POSITION SENSOR
C6 CRANKSHAFT POSITION SENSOR
JUNCTION CONNECTOR
C7 CENTER CLUSTER SW
R3, R4
RADIO AND PLAYER
To Door Courtesy SW Front LH<10-2>
To Unlock Warning SW<9-2><15-3>
Engine block
EB
EA
Left kick panel
IF
Cowl side panel LH
ID
(*1)

M OVERALL ELECTRICAL WIRING DIAGRAM

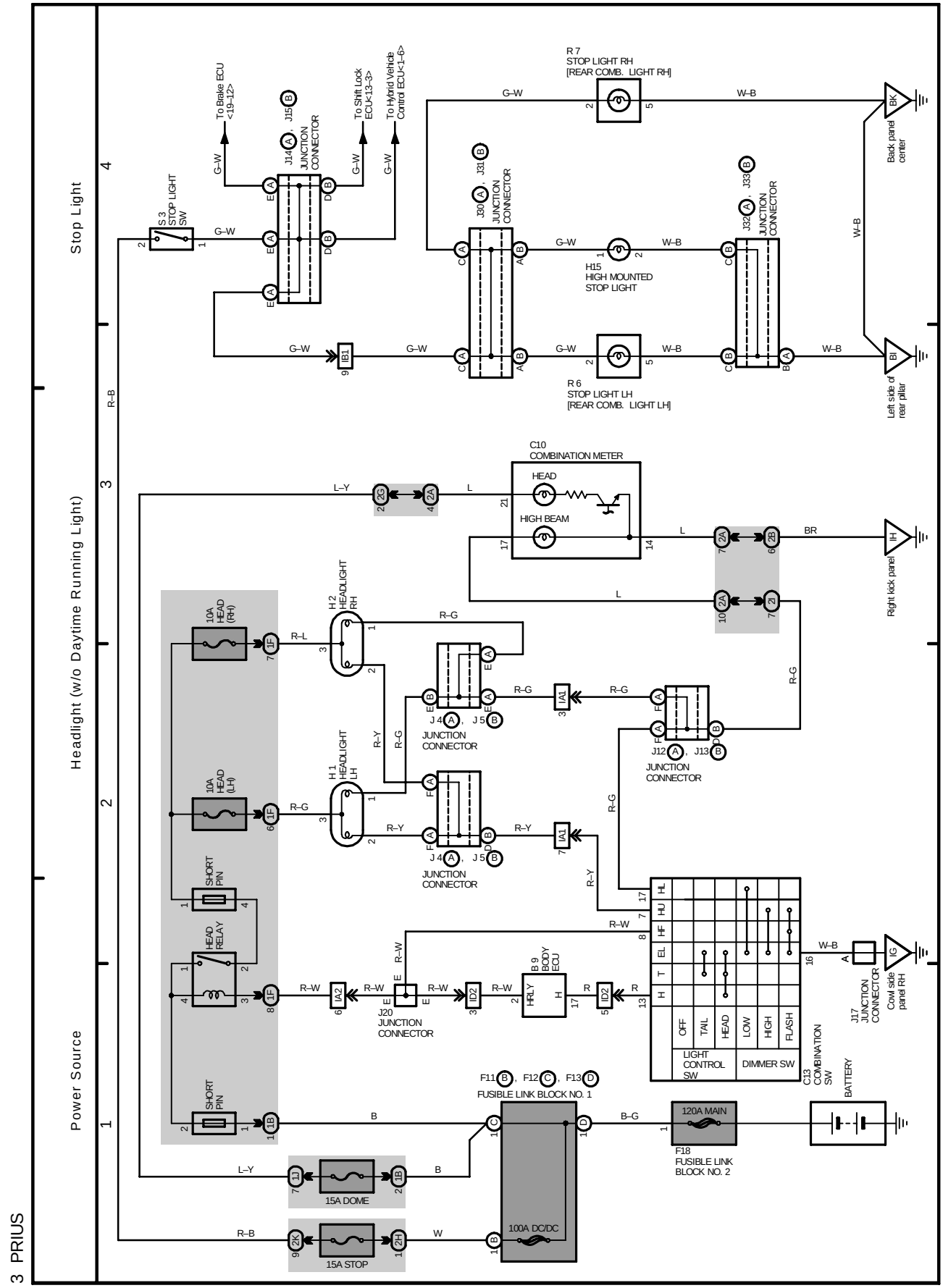

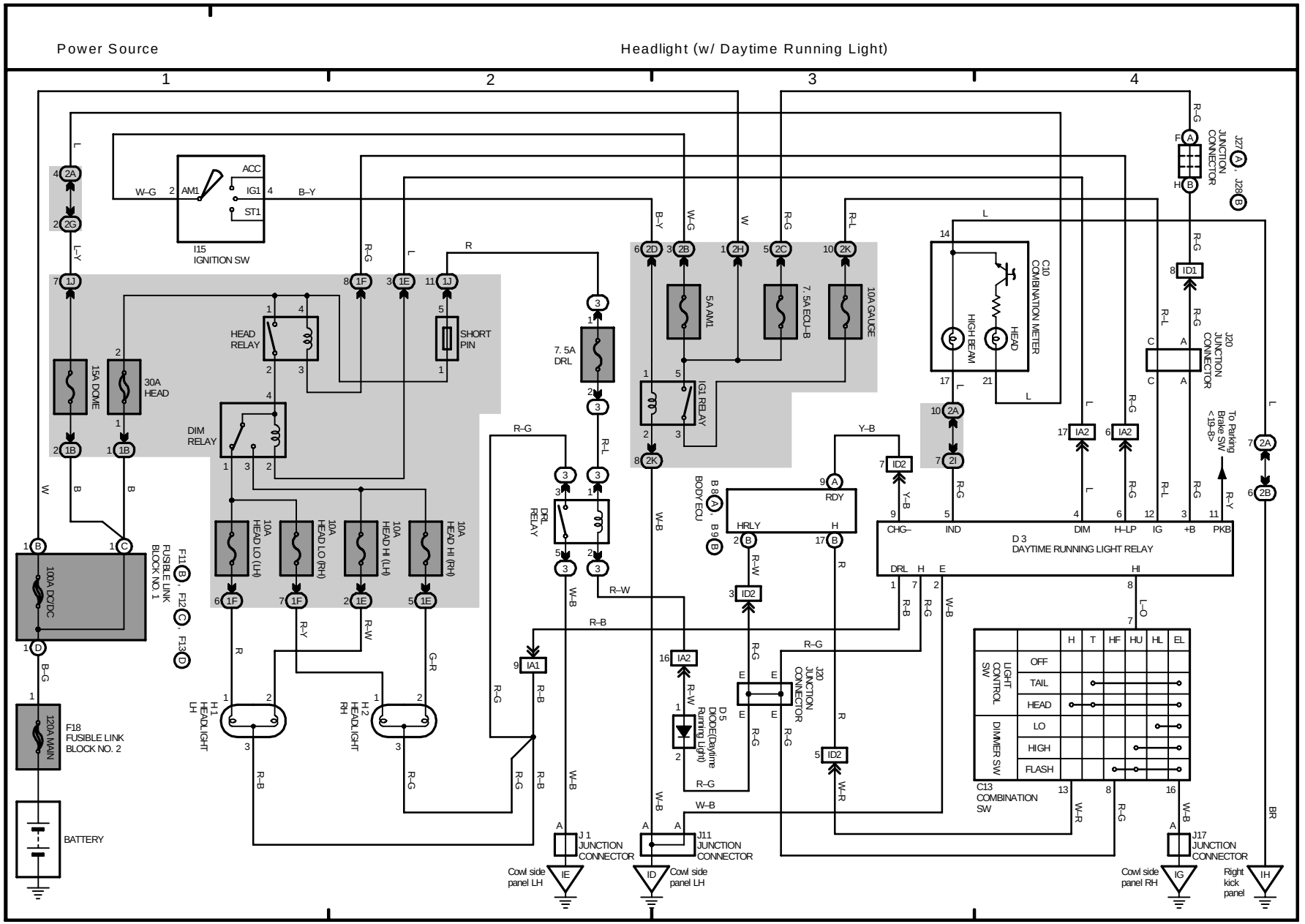
Power Source
Headlight (w/ Daytime Running Light)
1
2
3
4
I15
IGNITION SW
ACC
IG1
ST1
AM1
HEAD RELAY
SHORT PIN
DIM RELAY
15A DOME
30A HEAD
5A AM1
7. 5A ECU–B
10A GAUGE
IG1 RELAY
7. 5A DRL
DRL RELAY
10A HEAD LO (LH)
10A HEAD LO (RH)
10A HEAD H (LH)
10A HEAD H (RH)
100A DC/DC
FUSIBLE LINK BLOCK NO. 1
120A MAIN
F18 FUSIBLE LINK BLOCK NO. 2
BATTERY
H1 HEADLIGHT LH
H2 HEADLIGHT RH
C10 COMBINATION METER
HIGH BEAM
HEAD
J20 JUNCTION CONNECTOR
J27 , J28
To Parking Brake SW <19–8>
D 3 DAYTIME RUNNING LIGHT RELAY
CHG–
IND
DIM
H–LP
IG
+B
PKB
B 8 , B 9 BODY ECU
RDY
HRLY
D 5 DIODE(Daytime Running Light)
C13 COMBINATION SW
LIGHT CONTROL SW
OFF
TAIL
HEAD
DIMMER SW
LO
HIGH
FLASH
J 1 JUNCTION CONNECTOR
J11 JUNCTION CONNECTOR
J17 JUNCTION CONNECTOR
Cowl side panel LH
Cowl side panel RH
Right kick panel
IE
ID
IG
IH

M OVERALL ELECTRICAL WIRING DIAGRAM

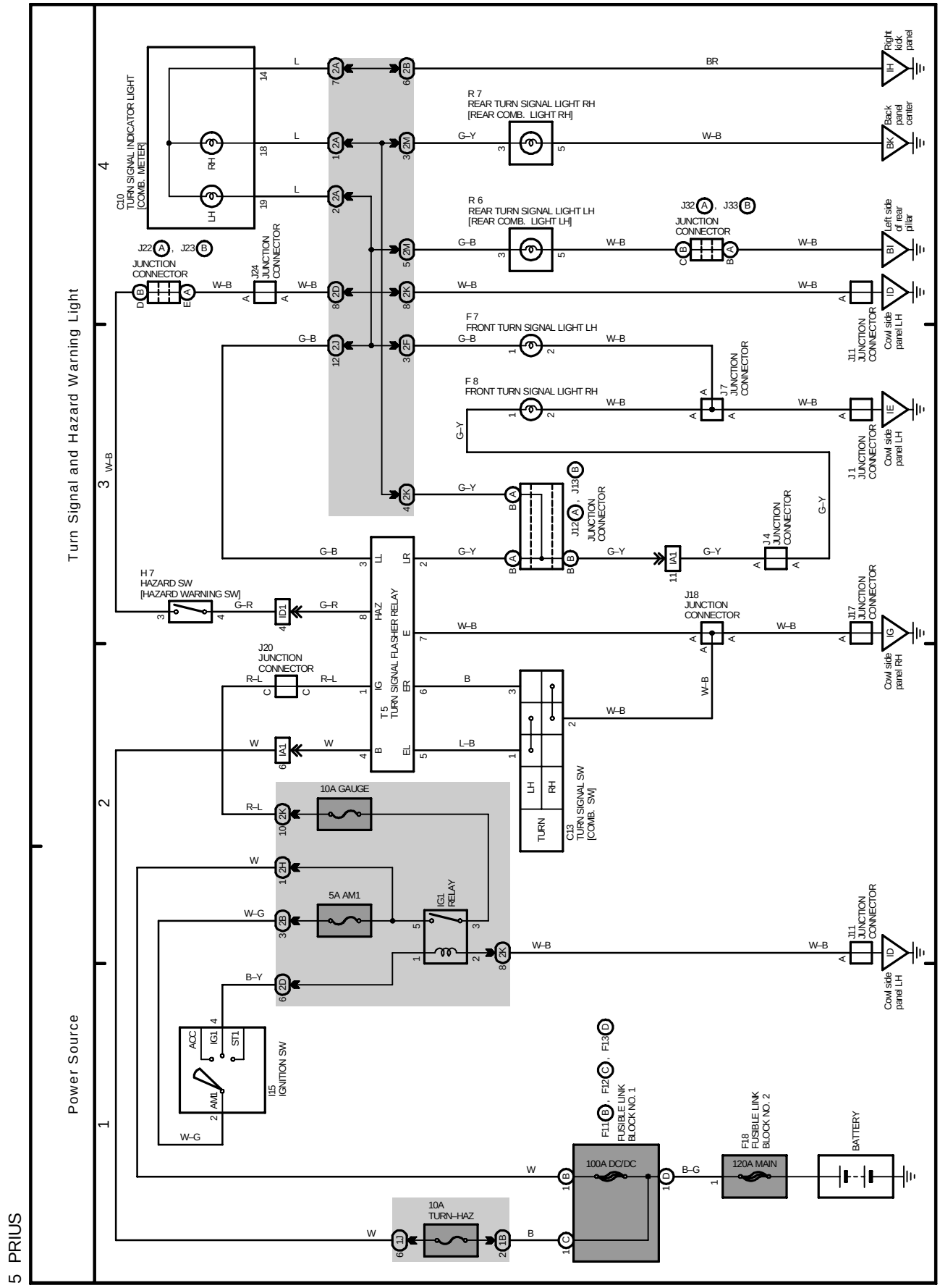

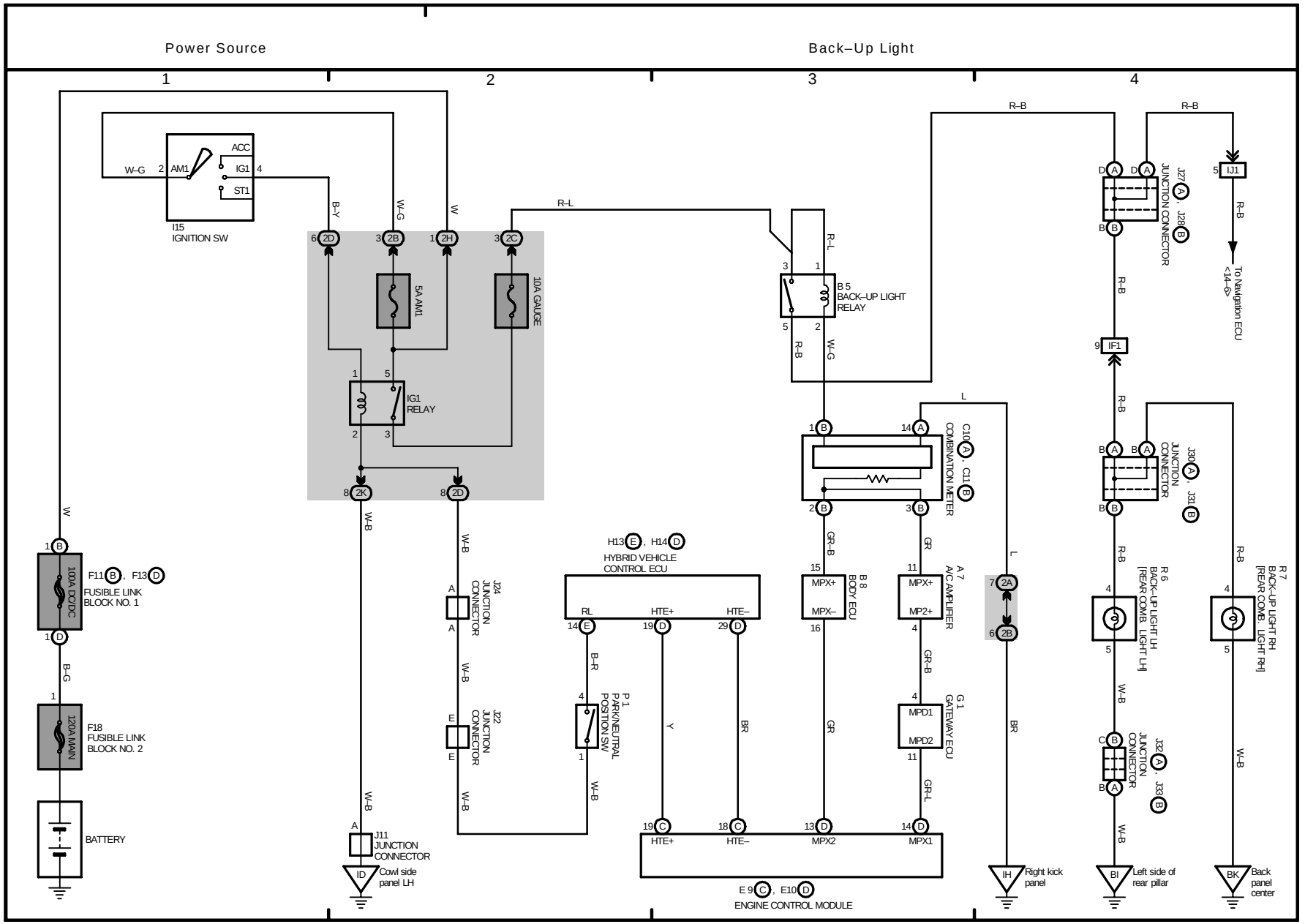
Power Source
Back–Up Light
1
2
3
4
ACC
IG1
ST1
AM1
W–G
I15
IGNITION SW
B–Y
W–G
W
R–L
5A AM1
10A GAUGE
IG1
RELAY
B 5
BACK–UP LIGHT
RELAY
R–B
W–G
L
C10
COMBINATION METER
C11
GR–B
GR
B 8
BODY ECU
MPX+
MPX–
A 7
A/C AMPLIFIER
MP2+
G 1
GATEWAY ECU
MPD1
MPD2
GR–L
H13, H14
HYBRID VEHICLE
CONTROL ECU
RL
HTE+
HTE–
P 1
PARK/NEUTRAL
POSITION SW
B–R
Y
BR
J24
JUNCTION
CONNECTOR
J22
JUNCTION
CONNECTOR
J11
JUNCTION
CONNECTOR
Cowl side
panel LH
100A DC/DC
F11, F13
FUSIBLE LINK
BLOCK NO. 1
B–G
120A MAIN
F18
FUSIBLE LINK
BLOCK NO. 2
BATTERY
E 9, E10
ENGINE CONTROL MODULE
HTE+
HTE–
MPX2
MPX1
J27, J28
JUNCTION CONNECTOR
To Navigation ECU
<14–6>
IF1
J30, J31
JUNCTION
CONNECTOR
J32, J33
JUNCTION
CONNECTOR
R 6
BACK–UP LIGHT LH
[REAR COMB. LIGHT LH]
R 7
BACK–UP LIGHT RH
[REAR COMB. LIGHT RH]
Right kick
panel
Left side of
rear pillar
Back
panel
center

M OVERALL ELECTRICAL WIRING DIAGRAM

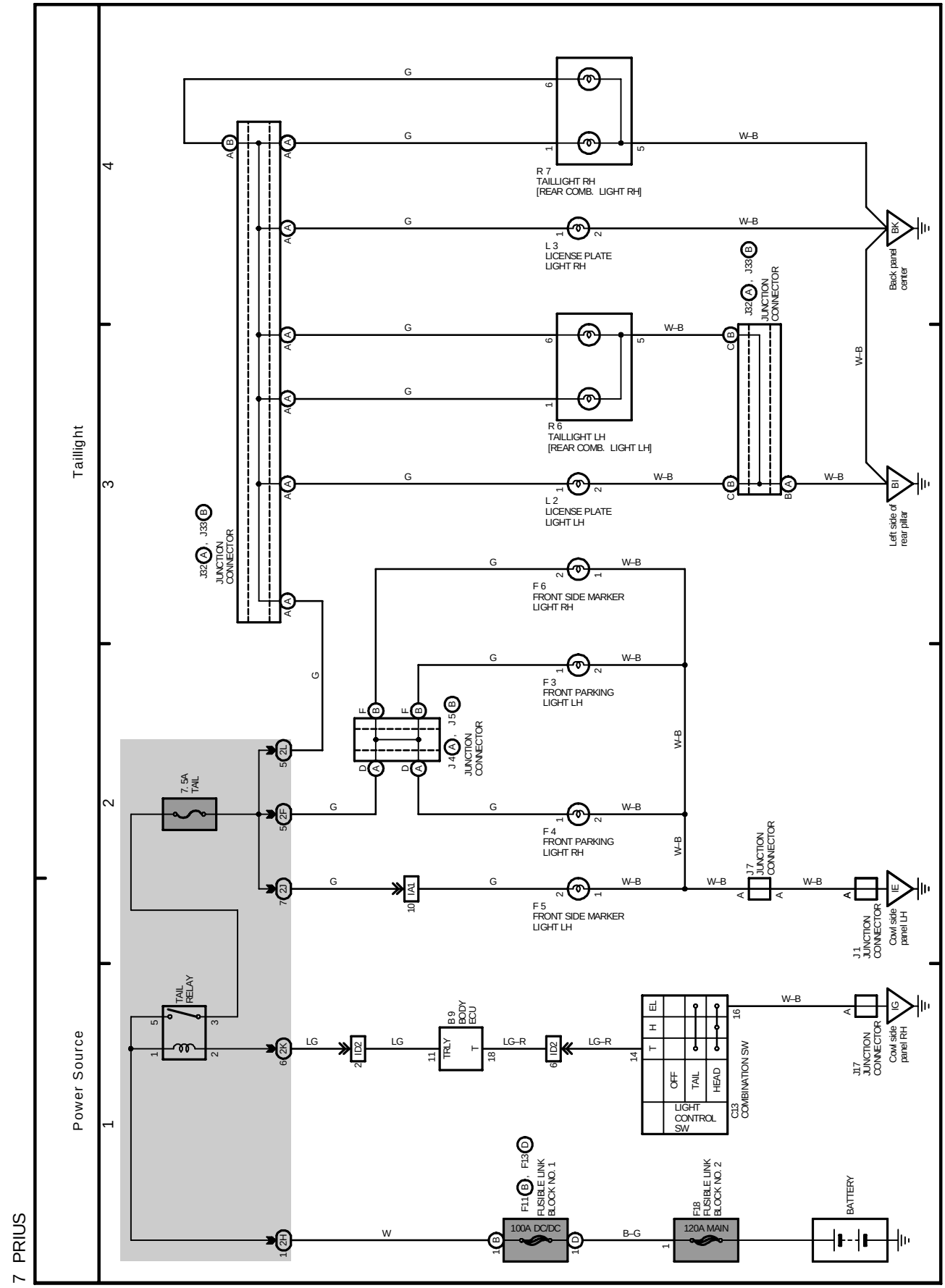

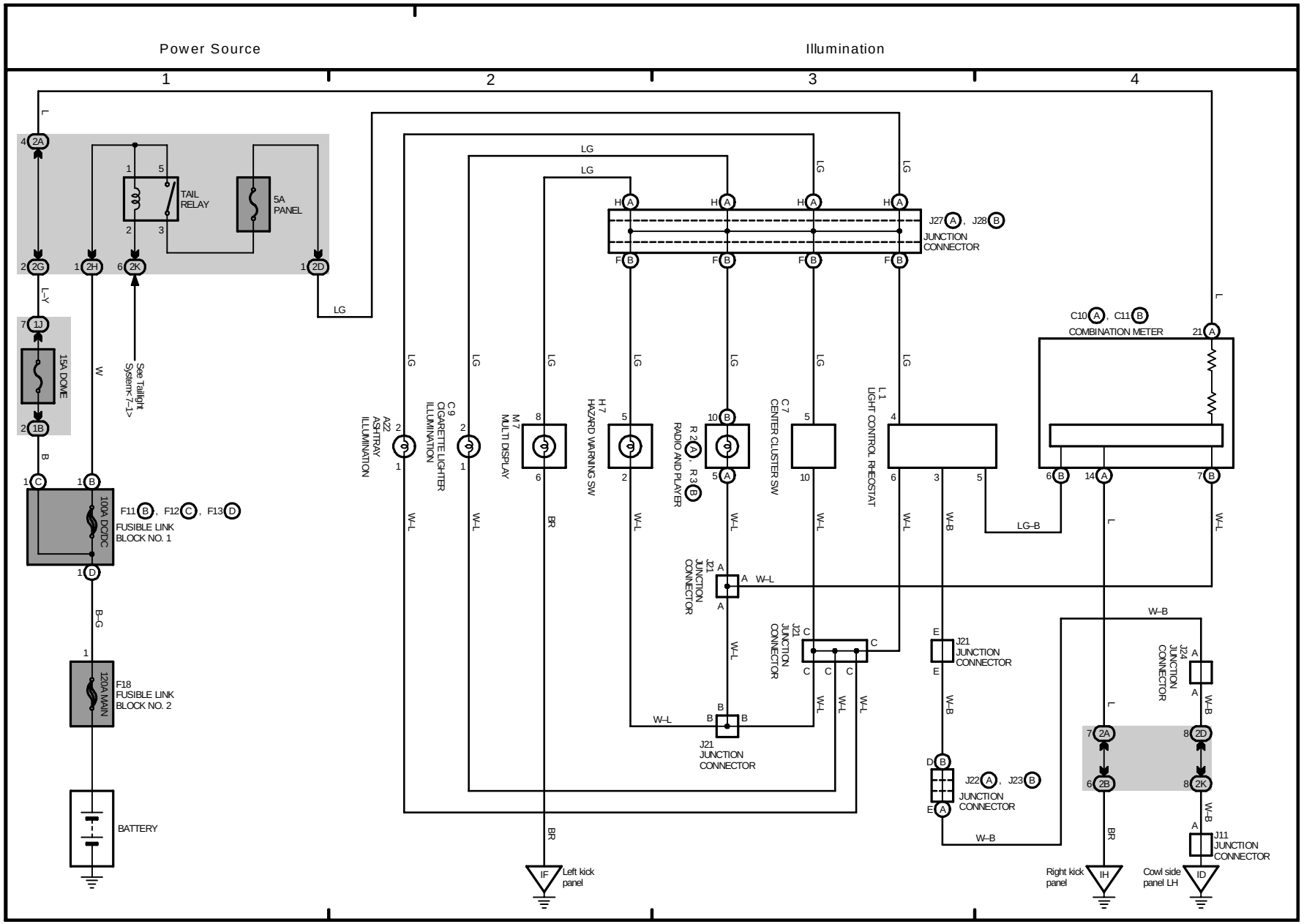
Power Source
Illumination
1
2
3
4
TAIL RELAY
5A PANEL
15A DOME
See Taillight System<7-1>
100A DC/DC
F11 B , F12 C , F13 D
FUSIBLE LINK BLOCK NO. 1
120A MAIN
F18
FUSIBLE LINK BLOCK NO. 2
BATTERY
J27 A , J28 B
JUNCTION CONNECTOR
C10 A , C11 B
COMBINATION METER
A22 ASHTRAY ILLUMINATION
C9 CIGARETTE LIGHTER ILLUMINATION
M7 MULTI DISPLAY
H7 HAZARD WARNING SW
R 2 A , R 3 B
RADIO AND PLAYER
C7 CENTER CLUSTER SW
L1 LIGHT CONTROL RHEOSTAT
J21 JUNCTION CONNECTOR
J22 A , J23 B
J24 JUNCTION CONNECTOR
J11 JUNCTION CONNECTOR
Left kick panel
Right kick panel
Cowl side panel LH
IF
IH
ID
L
LG
L-Y
W
B
B-G
W-L
W-B
LG-B
BR

M OVERALL ELECTRICAL WIRING DIAGRAM

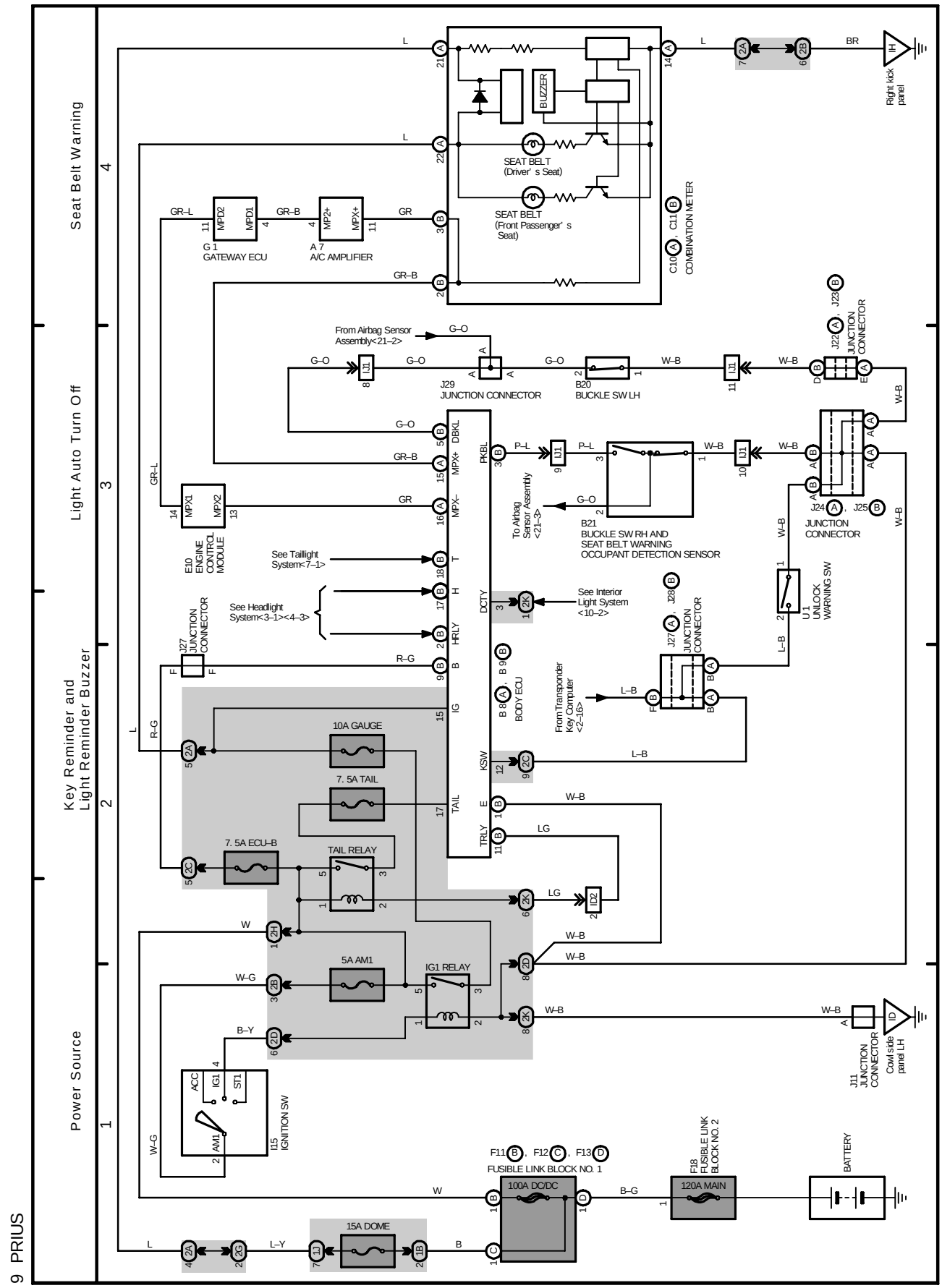

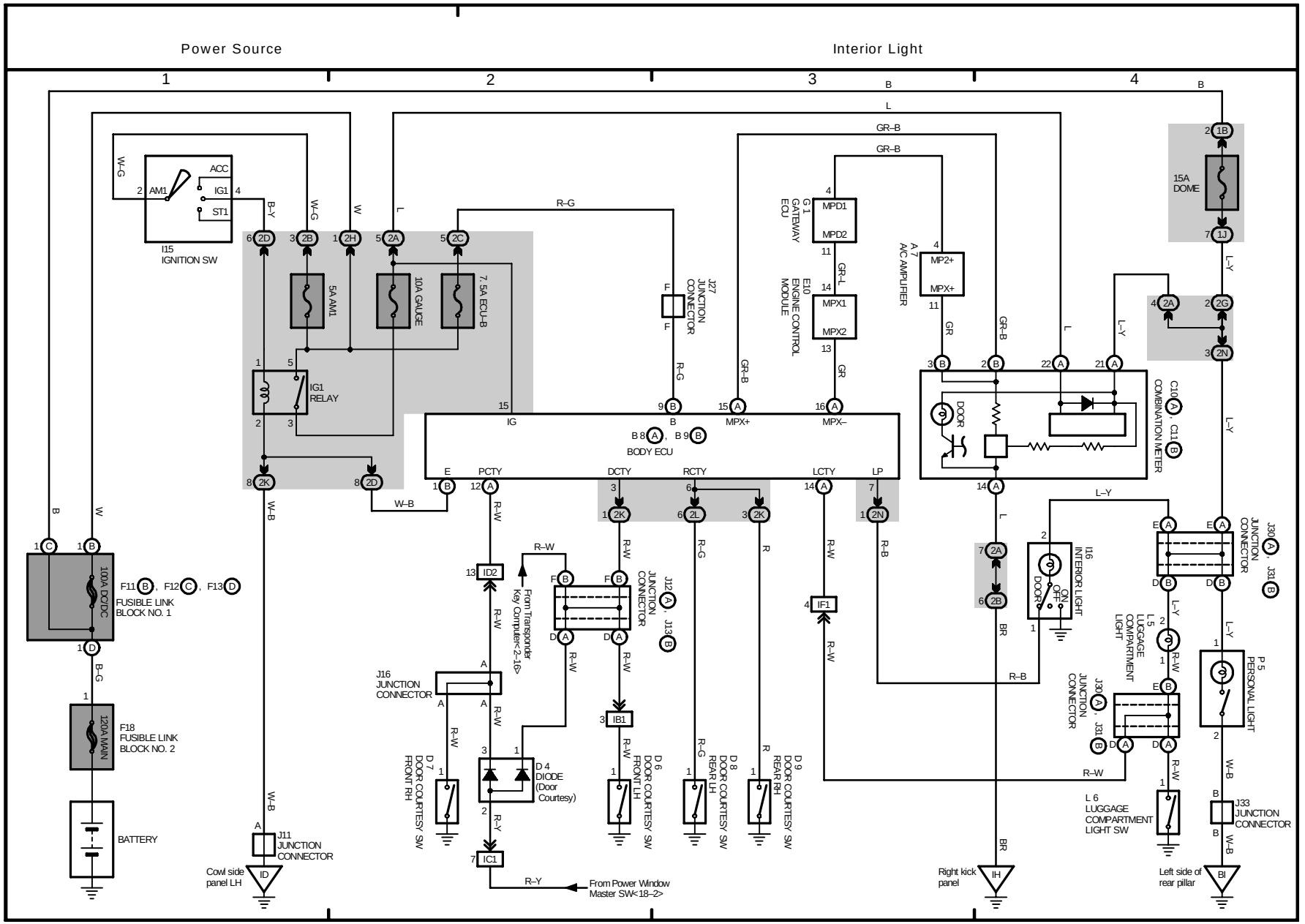
Power Source
Interior Light
1
2
3
4
I15 IGNITION SW
ACC
AM1
IG1
ST1
5A AM1
10A GAUGE
7.5A ECU-B
IG1 RELAY
IG
B 8 A , B 9 B
BODY ECU
127 JUNCTION CONNECTOR
G 1 GATEWAY ECU
E10 ENGINE CONTROL MODULE
A 7 A/C AMPLIFIER
MPD1
MPD2
MPX1
MPX2
MP2+
MPX+
MPX–
15A DOME
DOOR
C10 , C11 COMBINATION METER
I16 INTERIOR LIGHT
DOOR
ON
OFF
J30 , J31 JUNCTION CONNECTOR
L 5 LUGGAGE COMPARTMENT LIGHT
P 5 PERSONAL LIGHT
L 6 LUGGAGE COMPARTMENT LIGHT SW
J33 JUNCTION CONNECTOR
100A DC/DC
F11 B , F12 C , F13 D
FUSIBLE LINK BLOCK NO. 1
F18 FUSIBLE LINK BLOCK NO. 2
120A MAIN
BATTERY
J11 JUNCTION CONNECTOR
Cowl side panel LH
J16 JUNCTION CONNECTOR
J12 , J13 JUNCTION CONNECTOR
From Transponder Key Computer<2–16>
D 4 DIODE (Door Courtesy)
D 6 DOOR COURTESY SW FRONT LH
D 7 DOOR COURTESY SW FRONT RH
D 8 DOOR COURTESY SW REAR LH
D 9 DOOR COURTESY SW REAR RH
From Power Window Master SW<18–2>
Right kick panel
Left side of rear pillar
PCTY
DCTY
RCTY
LCTY
LP

M OVERALL ELECTRICAL WIRING DIAGRAM

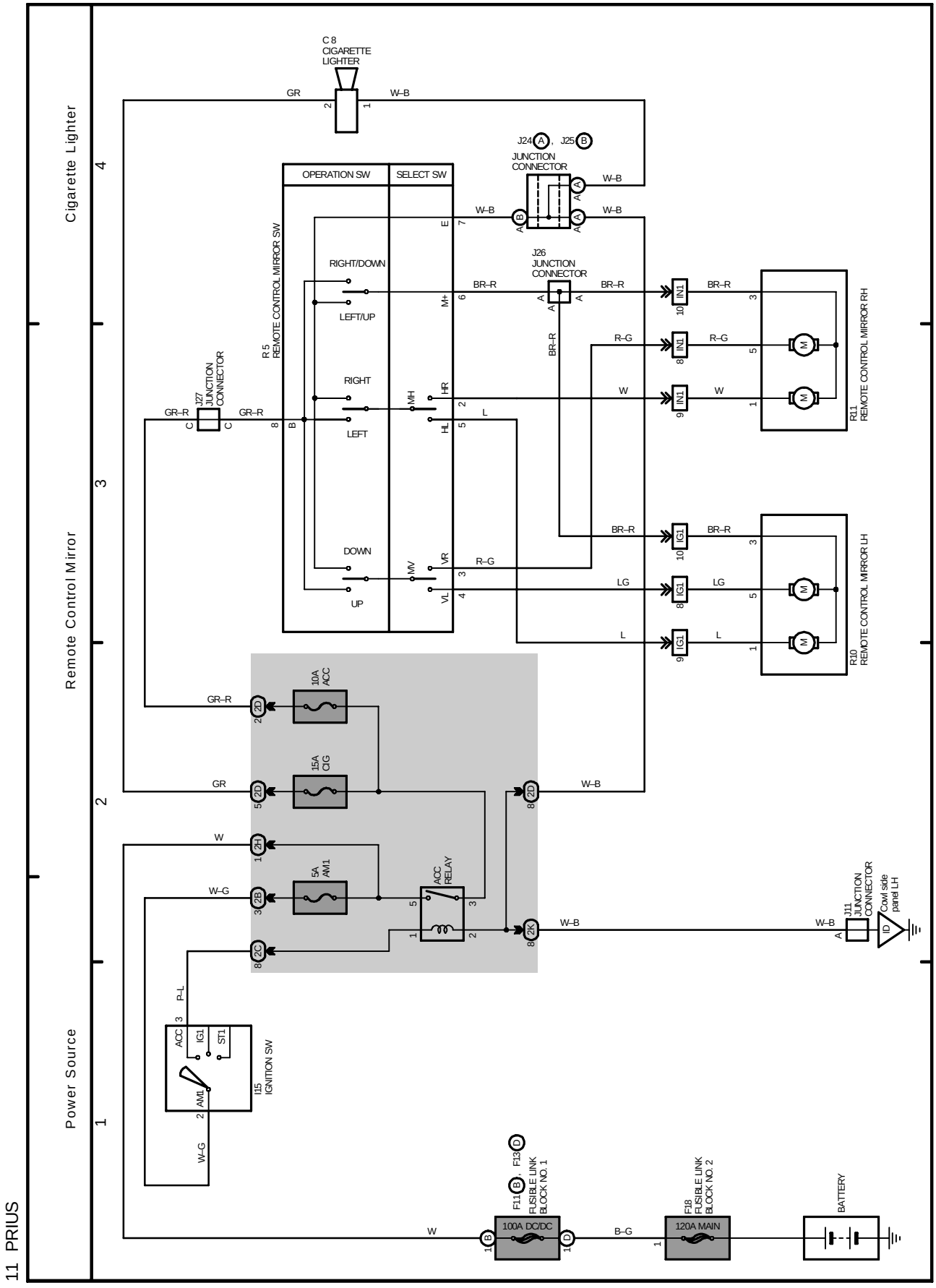

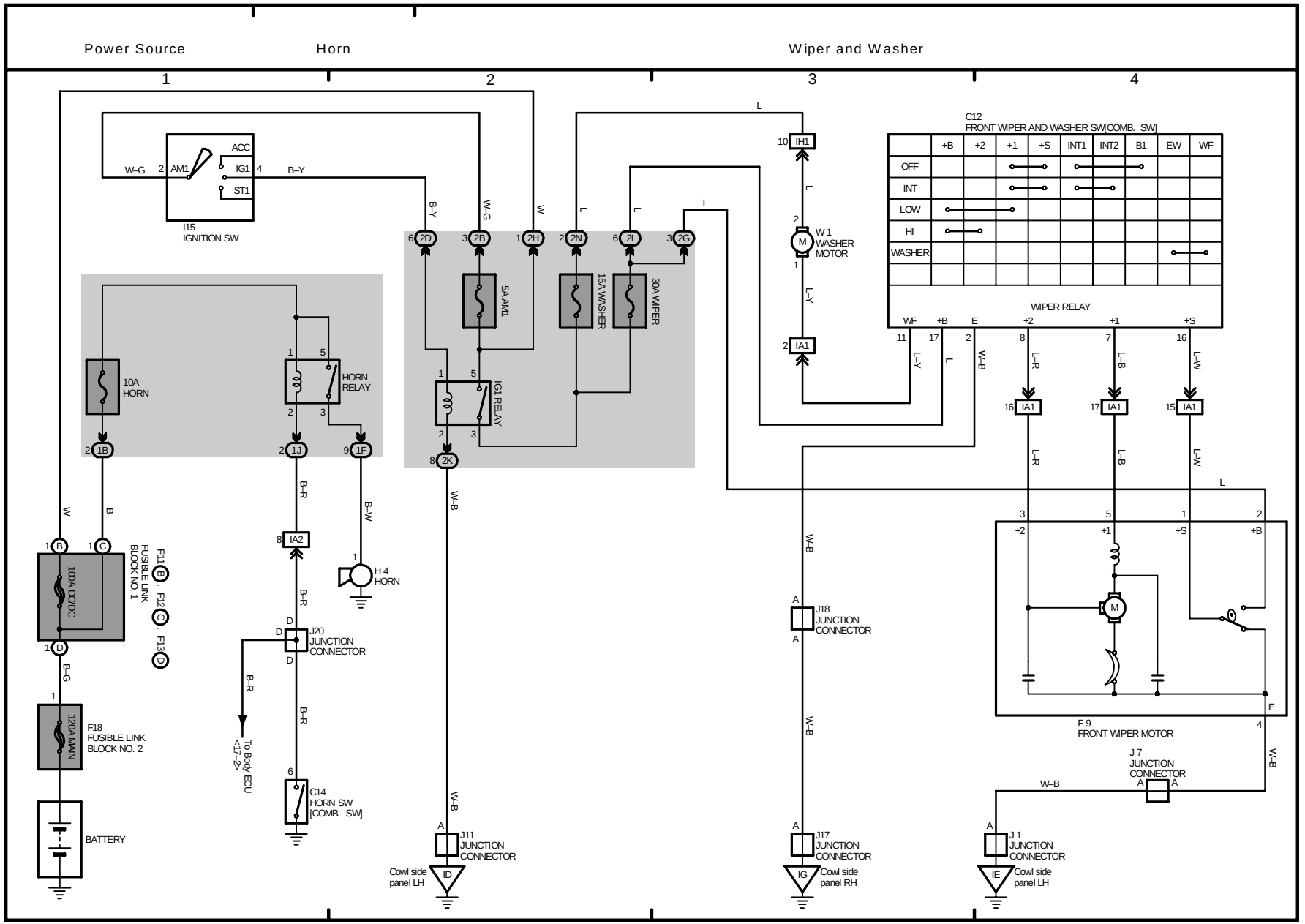
Power Source
Horn
Wiper and Washer
1
2
3
4
ACC
IG1
ST1
AM1
W–G
B–Y
I15
IGNITION SW
10A
HORN
HORN
RELAY
5A AM1
IG1 RELAY
15A WASHER
30A WIPER
H 4
HORN
100A DC/DC
FUSIBLE LINK
BLOCK NO. 1
F11
F12
F13
F18
FUSIBLE LINK
BLOCK NO. 2
120A MAIN
BATTERY
J20
JUNCTION
CONNECTOR
To Body ECU
<17–2>
C14
HORN SW
[COMB. SW]
J11
JUNCTION
CONNECTOR
Cowl side
panel LH
W 1
WASHER
MOTOR
C12
FRONT WIPER AND WASHER SW[COMB. SW]
+B
+2
+1
+S
INT1
INT2
B1
EW
WF
OFF
INT
LOW
HI
WASHER
WIPER RELAY
E
J18
JUNCTION
CONNECTOR
J17
JUNCTION
CONNECTOR
Cowl side
panel RH
F 9
FRONT WIPER MOTOR
J 7
JUNCTION
CONNECTOR
J 1
JUNCTION
CONNECTOR
Cowl side
panel LH

M OVERALL ELECTRICAL WIRING DIAGRAM

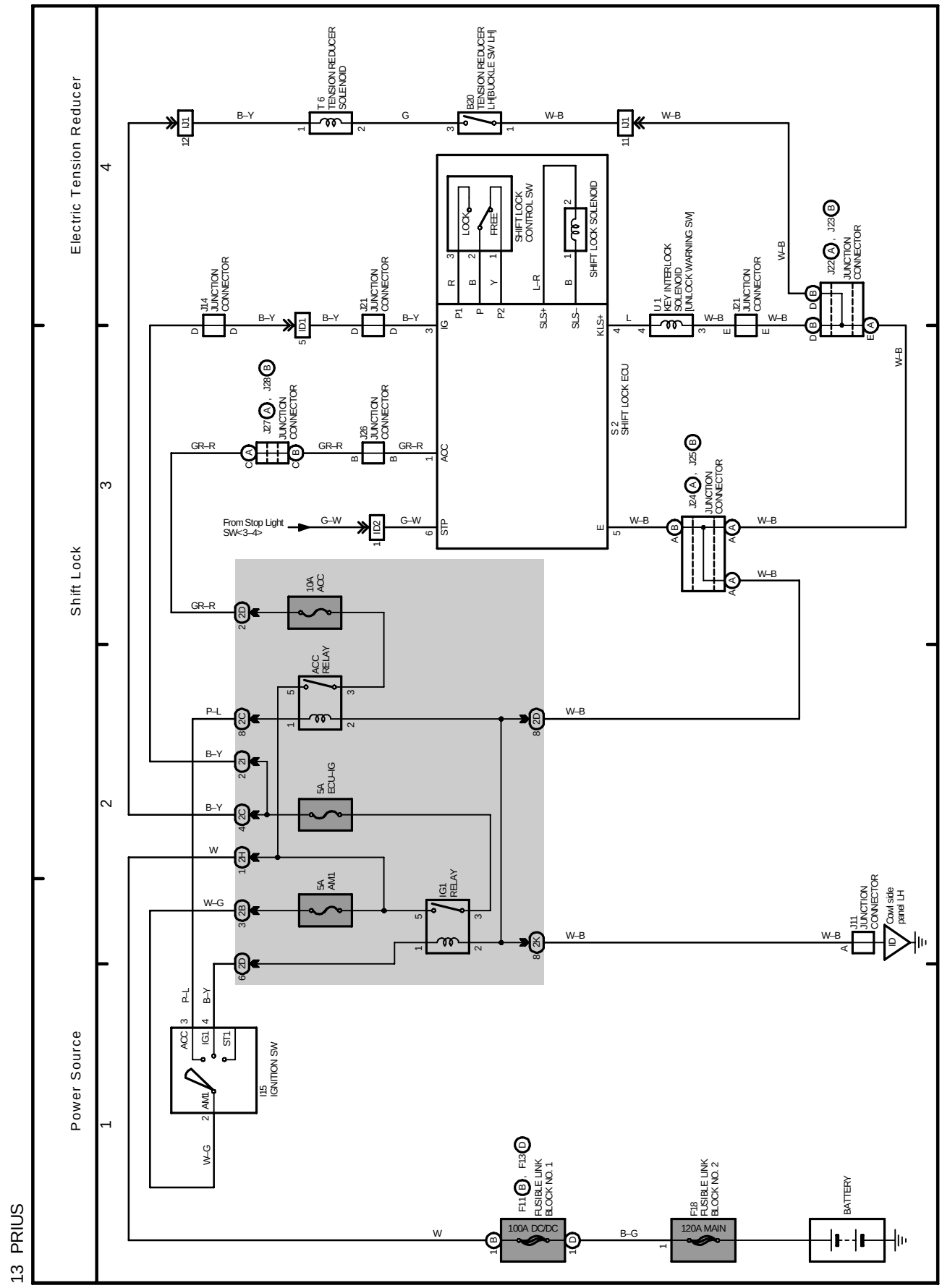

M OVERALL ELECTRICAL WIRING DIAGRAM

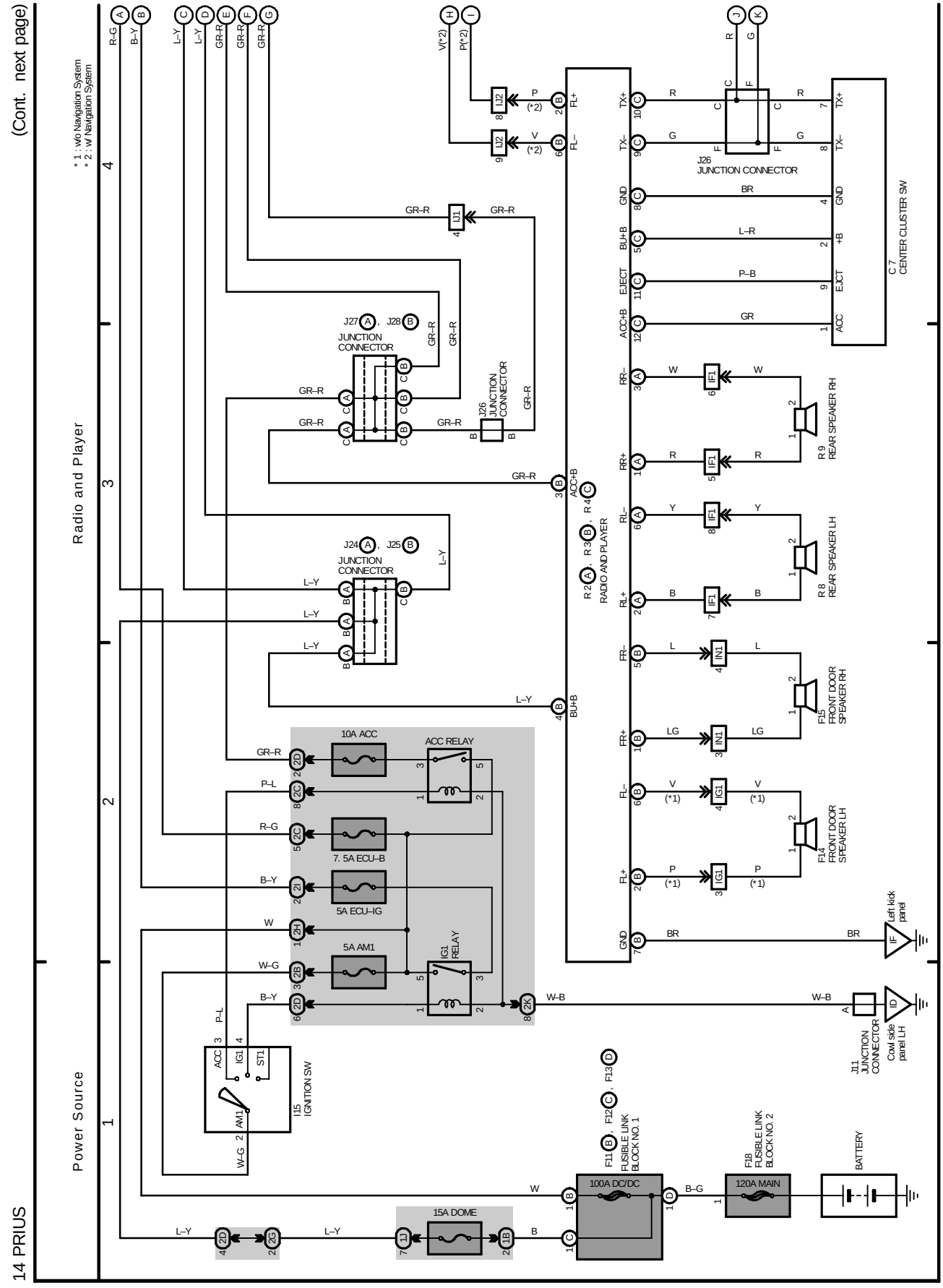

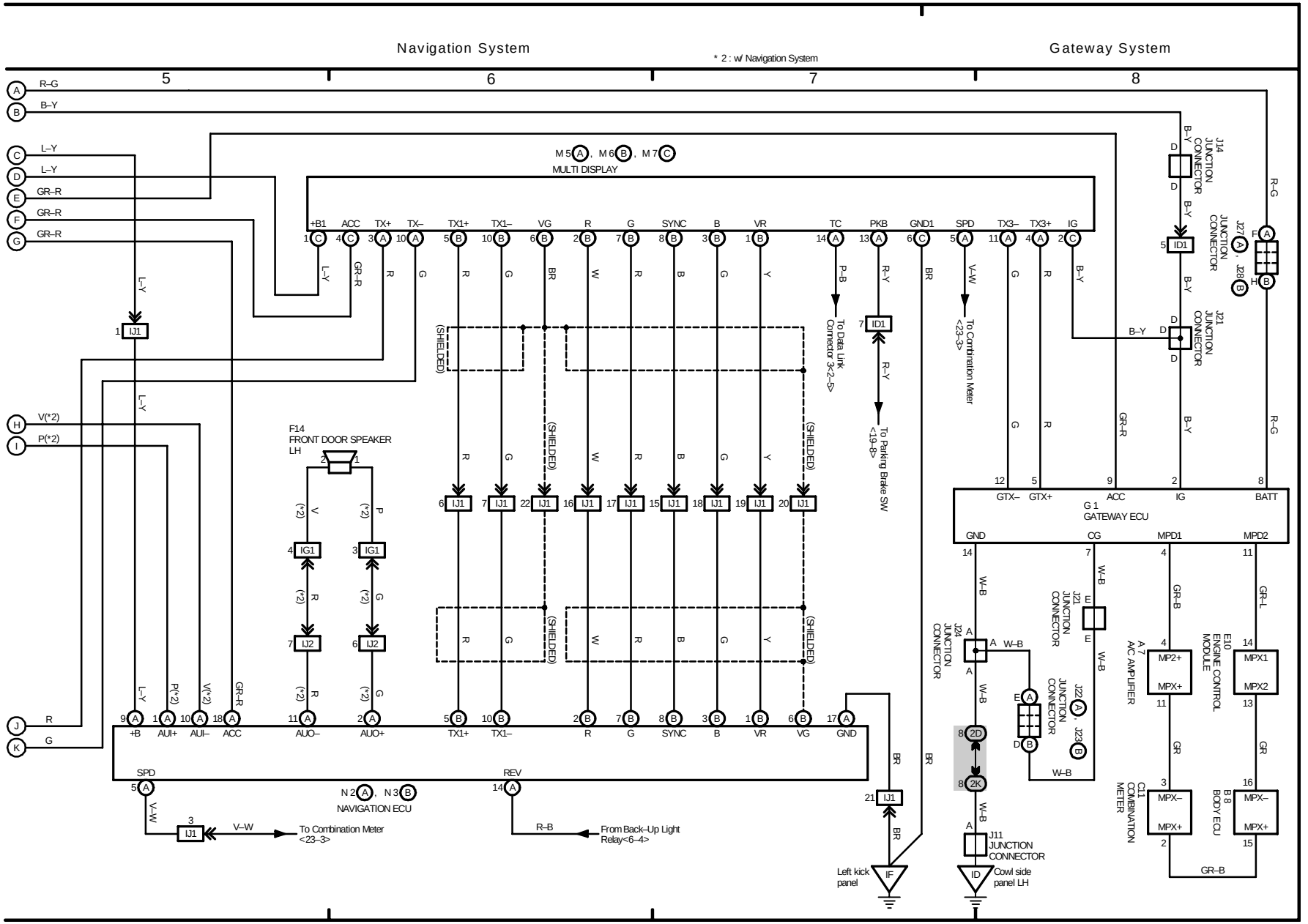
Navigation System
* 2 : w/ Navigation System
Gateway System
5
6
7
8
M 5 A , M 6 B , M 7 C
MULTI DISPLAY
+B1 ACC TX+ TX– TX1+ TX1– VG R G SYNC B VR TC PKB GND1 SPD TX3– TX3+ IG
To Data Link Connector 3<2–5>
To Parking Brake SW <19–8>
To Combination Meter <23–3>
F14
FRONT DOOR SPEAKER LH
(SHIELDED)
IJ1
IG1
IJ2
+B AUI+ AUI– ACC AUO– AUO+ TX1+ TX1– R G SYNC B VR VG GND
SPD
REV
N 2 A , N 3 B
NAVIGATION ECU
To Combination Meter <23–3>
From Back–Up Light Relay<6–4>
Left kick panel
IF
ID
Cowl side panel LH
J14 JUNCTION CONNECTOR
J27 A , J28 B
J21 JUNCTION CONNECTOR
J24 JUNCTION CONNECTOR
J22 A , J23 B
J11 JUNCTION CONNECTOR
G 1
GATEWAY ECU
GTX– GTX+ ACC IG BATT
GND CG MPD1 MPD2
A 7
A/C AMPLIFIER
E10
ENGINE CONTROL MODULE
C11
COMBINATION METER
B 8
BODY ECU
MP2+ MPX+ MPX1 MPX2 MPX– MPX+
GR–B

M OVERALL ELECTRICAL WIRING DIAGRAM

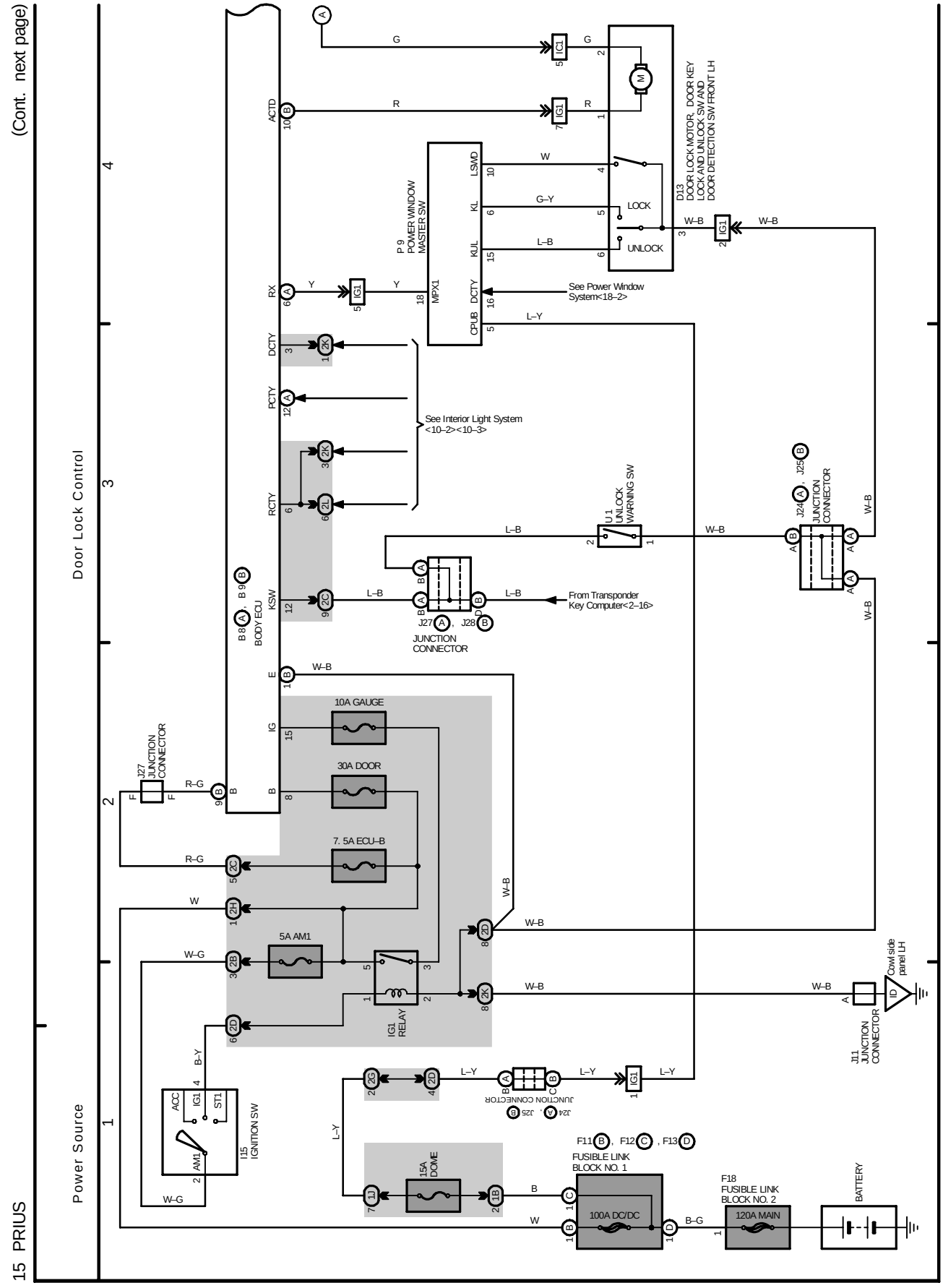

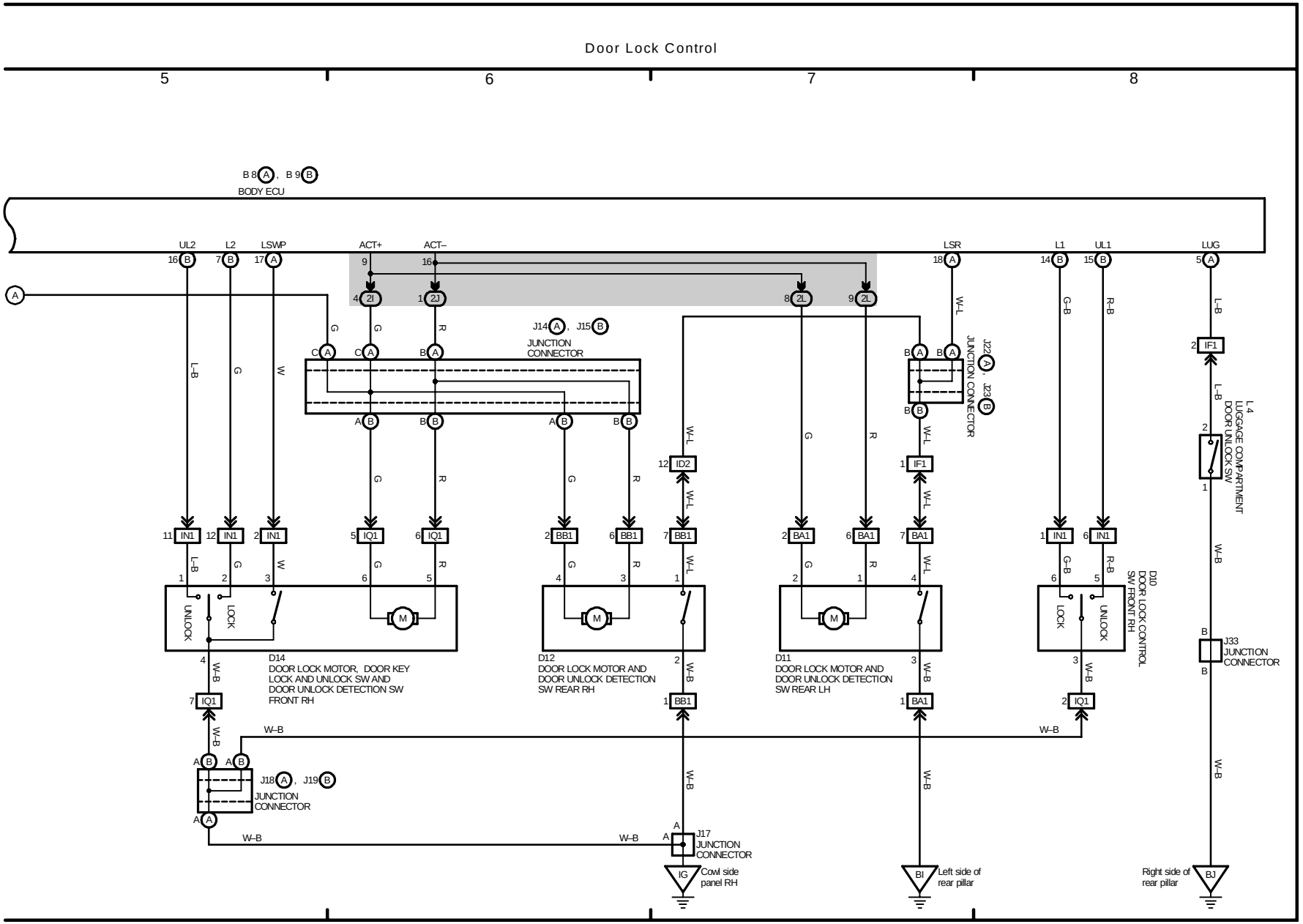
Door Lock Control
5
6
7
8
B 8 A , B 9 B
BODY ECU
UL2
L2
LSWP
ACT+
ACT–
LSR
L1
UL1
LUG
J14 A , J15 B
JUNCTION CONNECTOR
J22 , J23
JUNCTION CONNECTOR
L4
LUGGAGE COMPARTMENT DOOR UNLOCK SW
J33
JUNCTION CONNECTOR
D10
DOOR LOCK CONTROL SW FRONT RH
D14
DOOR LOCK MOTOR, DOOR KEY LOCK AND UNLOCK SW AND DOOR UNLOCK DETECTION SW FRONT RH
D12
DOOR LOCK MOTOR AND DOOR UNLOCK DETECTION SW REAR RH
D11
DOOR LOCK MOTOR AND DOOR UNLOCK DETECTION SW REAR LH
J18 A , J19 B
JUNCTION CONNECTOR
J17
JUNCTION CONNECTOR
IG
Cowl side panel RH
BI
Left side of rear pillar
BJ
Right side of rear pillar
UNLOCK
LOCK
W–B

M OVERALL ELECTRICAL WIRING DIAGRAM

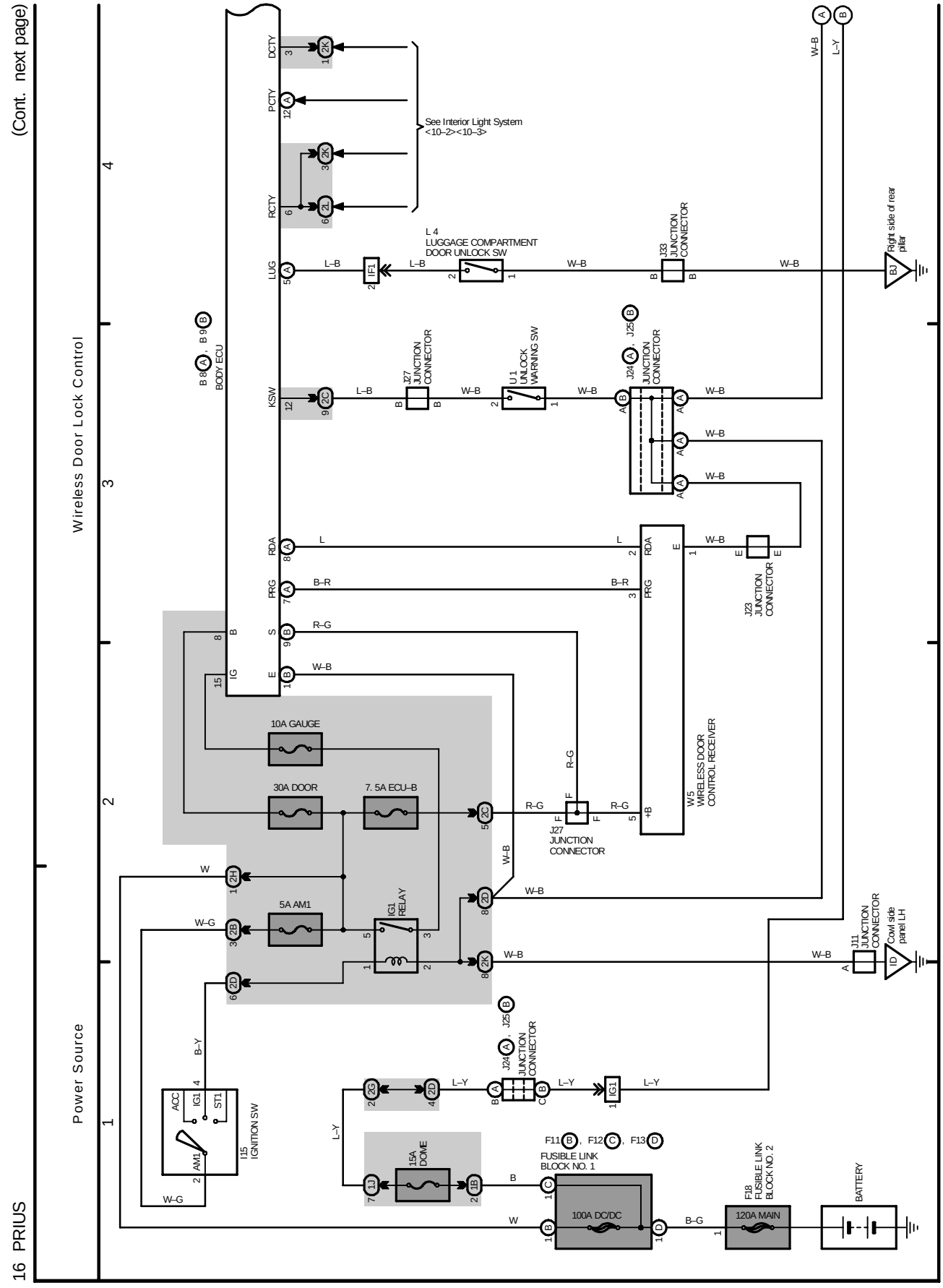

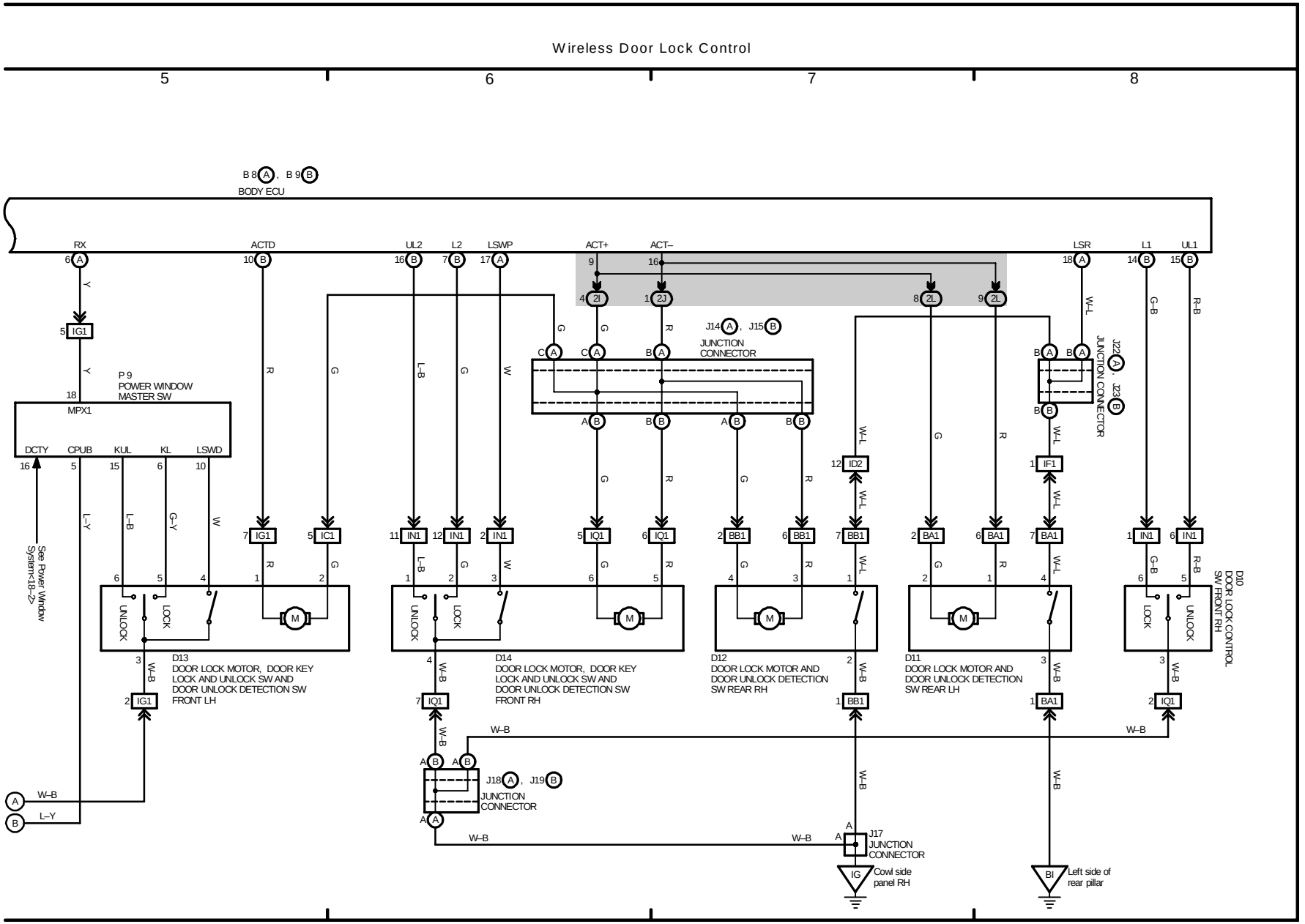
Wireless Door Lock Control
5
6
7
8
B 8 A , B 9 B
BODY ECU
RX
ACTD
UL2
L2
LSWP
ACT+
ACT–
LSR
L1
UL1
IG1
P 9
POWER WINDOW
MASTER SW
MPX1
DCTY
CPUB
KUL
KL
LSWD
See Power Window System<18–2>
J14 A , J15 B
JUNCTION
CONNECTOR
J22 A , J23 B
JUNCTION CONNECTOR
D13
DOOR LOCK MOTOR, DOOR KEY
LOCK AND UNLOCK SW AND
DOOR UNLOCK DETECTION SW
FRONT LH
D14
DOOR LOCK MOTOR, DOOR KEY
LOCK AND UNLOCK SW AND
DOOR UNLOCK DETECTION SW
FRONT RH
D12
DOOR LOCK MOTOR AND
DOOR UNLOCK DETECTION
SW REAR RH
D11
DOOR LOCK MOTOR AND
DOOR UNLOCK DETECTION
SW REAR LH
D10
DOOR LOCK CONTROL
SW FRONT RH
J18 A , J19 B
JUNCTION
CONNECTOR
J17
JUNCTION
CONNECTOR
IG
Cowl side
panel RH
BI
Left side of
rear pillar

M OVERALL ELECTRICAL WIRING DIAGRAM

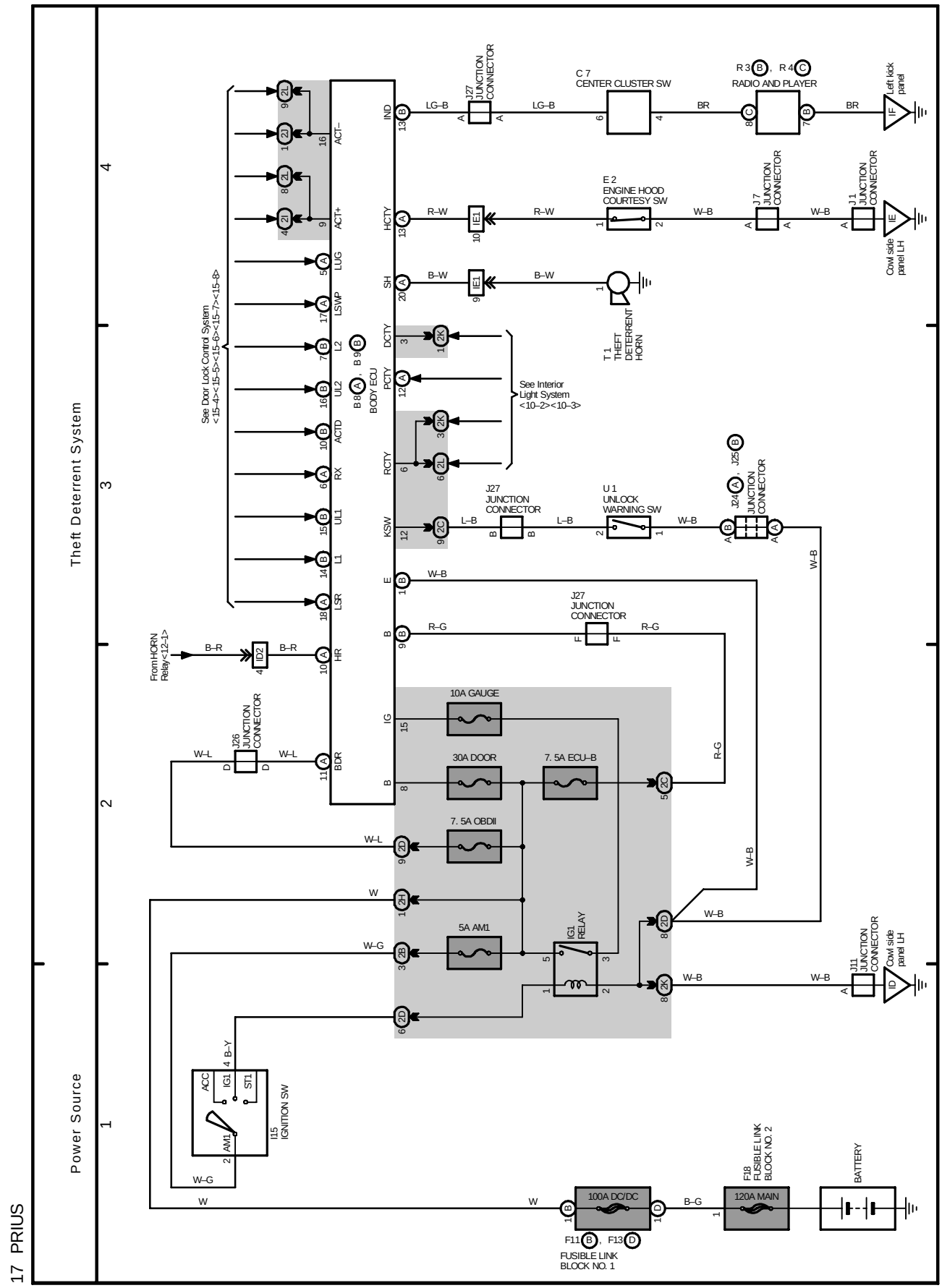

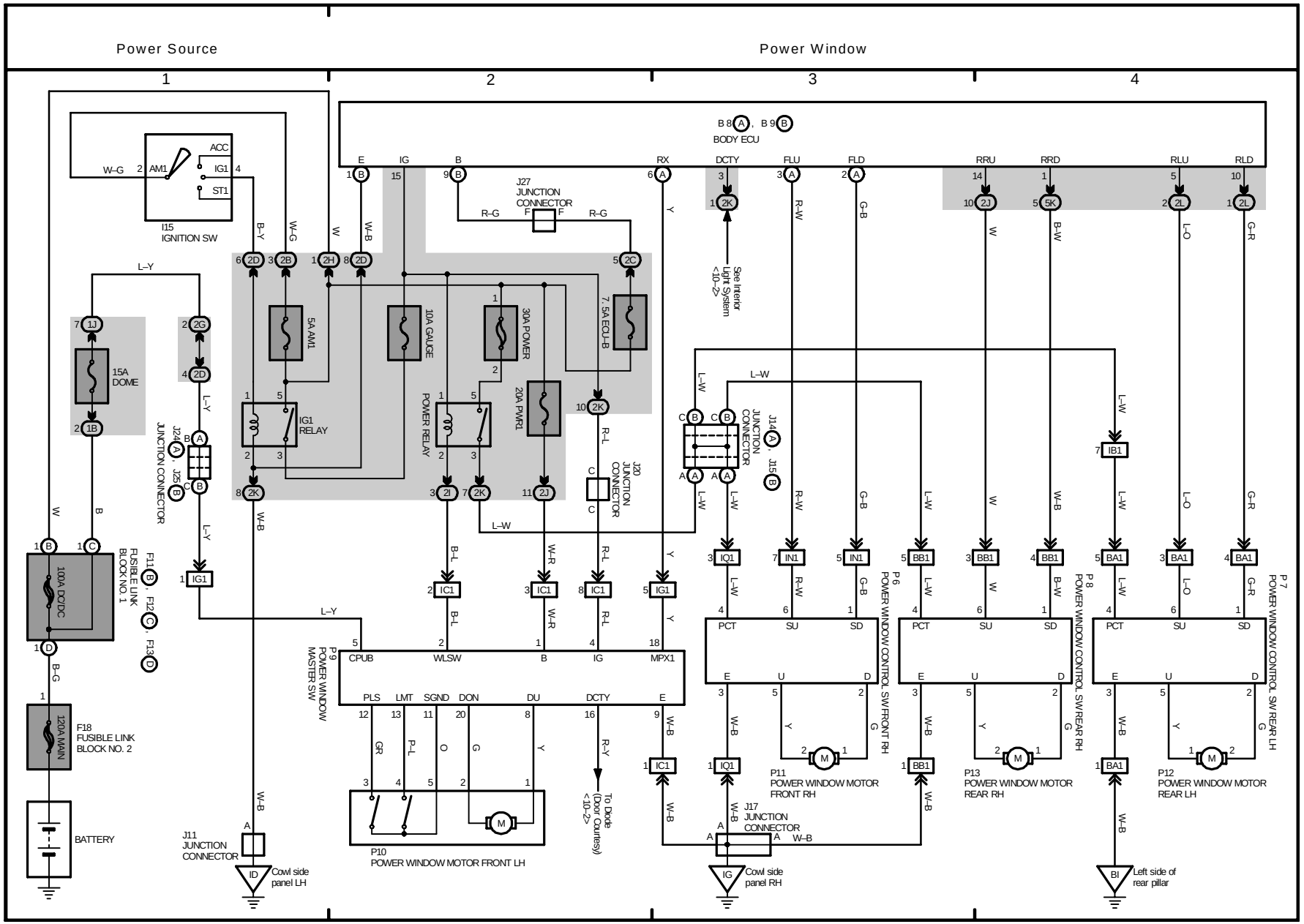
Power Source
Power Window
1
2
3
4
B 8 (A), B 9 (B)
BODY ECU
ACC
IG1
ST1
AM1
W–G
I15
IGNITION SW
J27
JUNCTION
CONNECTOR
R–G
See Interior
Light System
<10–2>
5A AM1
10A GAUGE
30A POWER
7. 5A ECU–B
15A
DOME
IG1
RELAY
POWER RELAY
20A PWR1
J24
J25
JUNCTION CONNECTOR
J20
JUNCTION
CONNECTOR
J14
J15
100A DC/DC
FUSIBLE LINK
BLOCK NO. 1
F18
FUSIBLE LINK
BLOCK NO. 2
120A MAIN
BATTERY
J11
JUNCTION
CONNECTOR
Cowl side
panel LH
P9
POWER WINDOW
MASTER SW
CPUB
WLSW
B
IG
MPX1
PLS
LMT
SGND
DON
DU
DCTY
P10
POWER WINDOW MOTOR FRONT LH
To Diode
(Door Courtesy)
<10–2>
P6
POWER WINDOW CONTROL SW FRONT RH
P8
POWER WINDOW CONTROL SW REAR RH
P7
POWER WINDOW CONTROL SW REAR LH
PCT
SU
SD
P11
POWER WINDOW MOTOR
FRONT RH
P13
POWER WINDOW MOTOR
REAR RH
P12
POWER WINDOW MOTOR
REAR LH
J17
JUNCTION
CONNECTOR
Cowl side
panel RH
Left side of
rear pillar

M OVERALL ELECTRICAL WIRING DIAGRAM

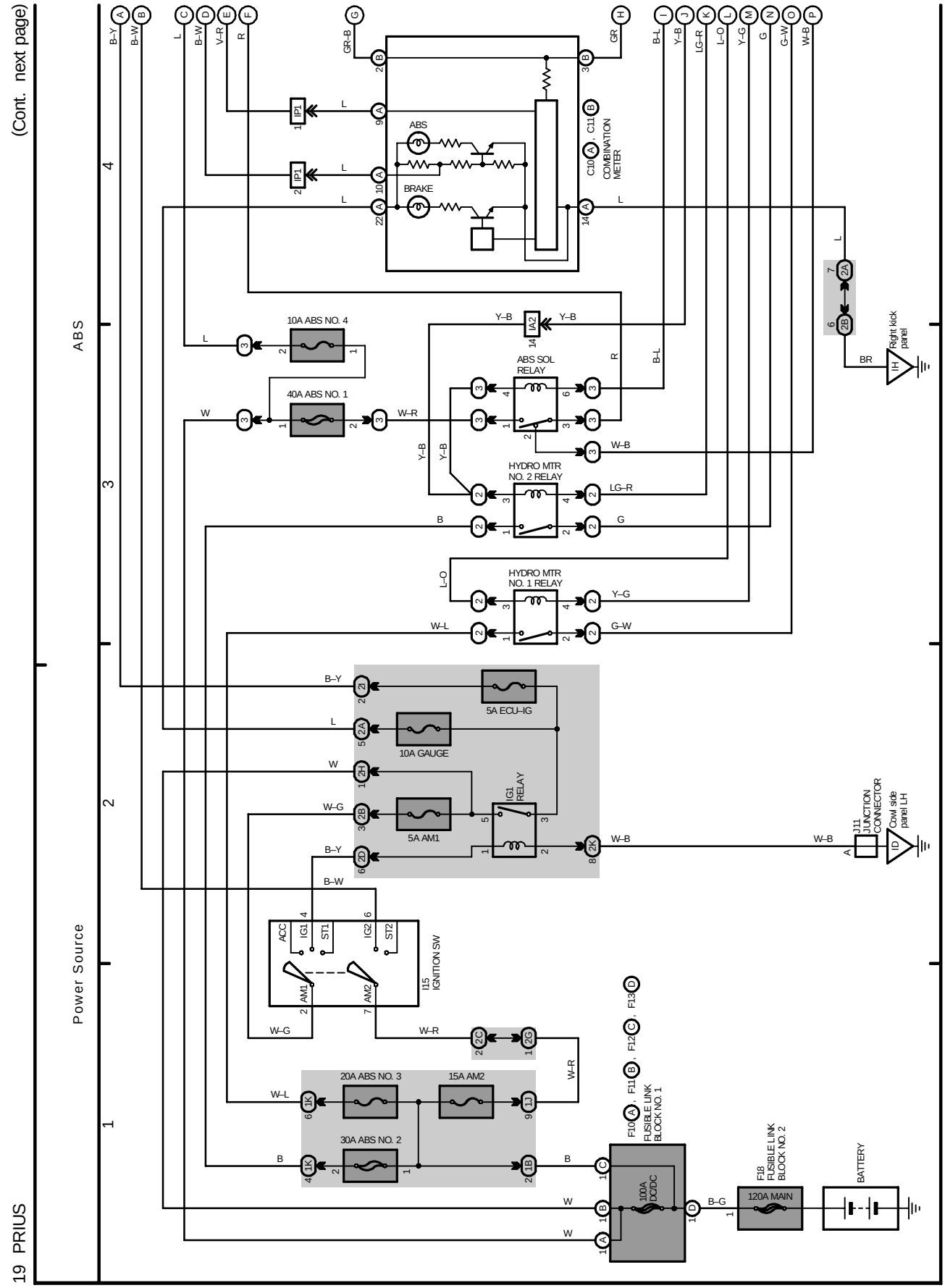

(Cont. next page)

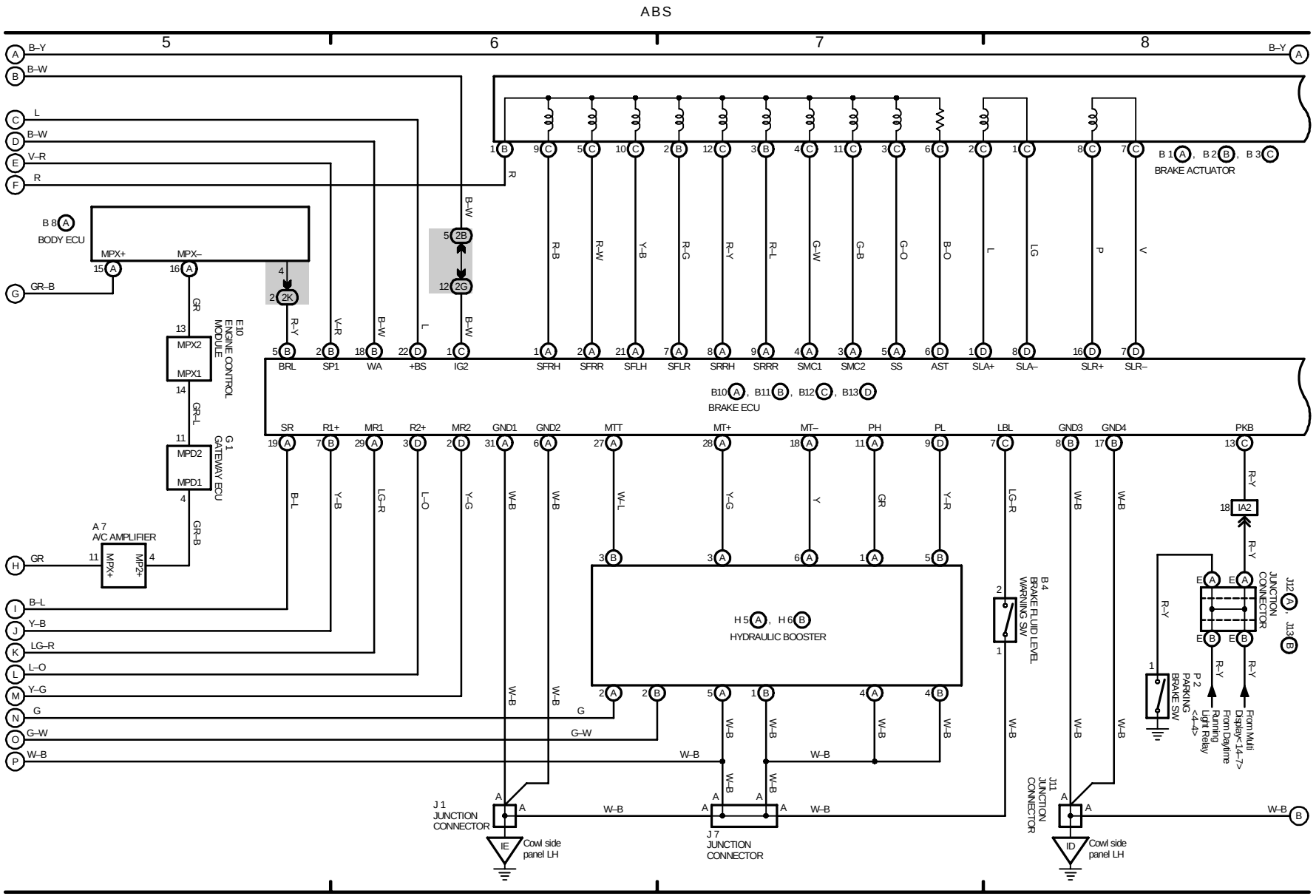

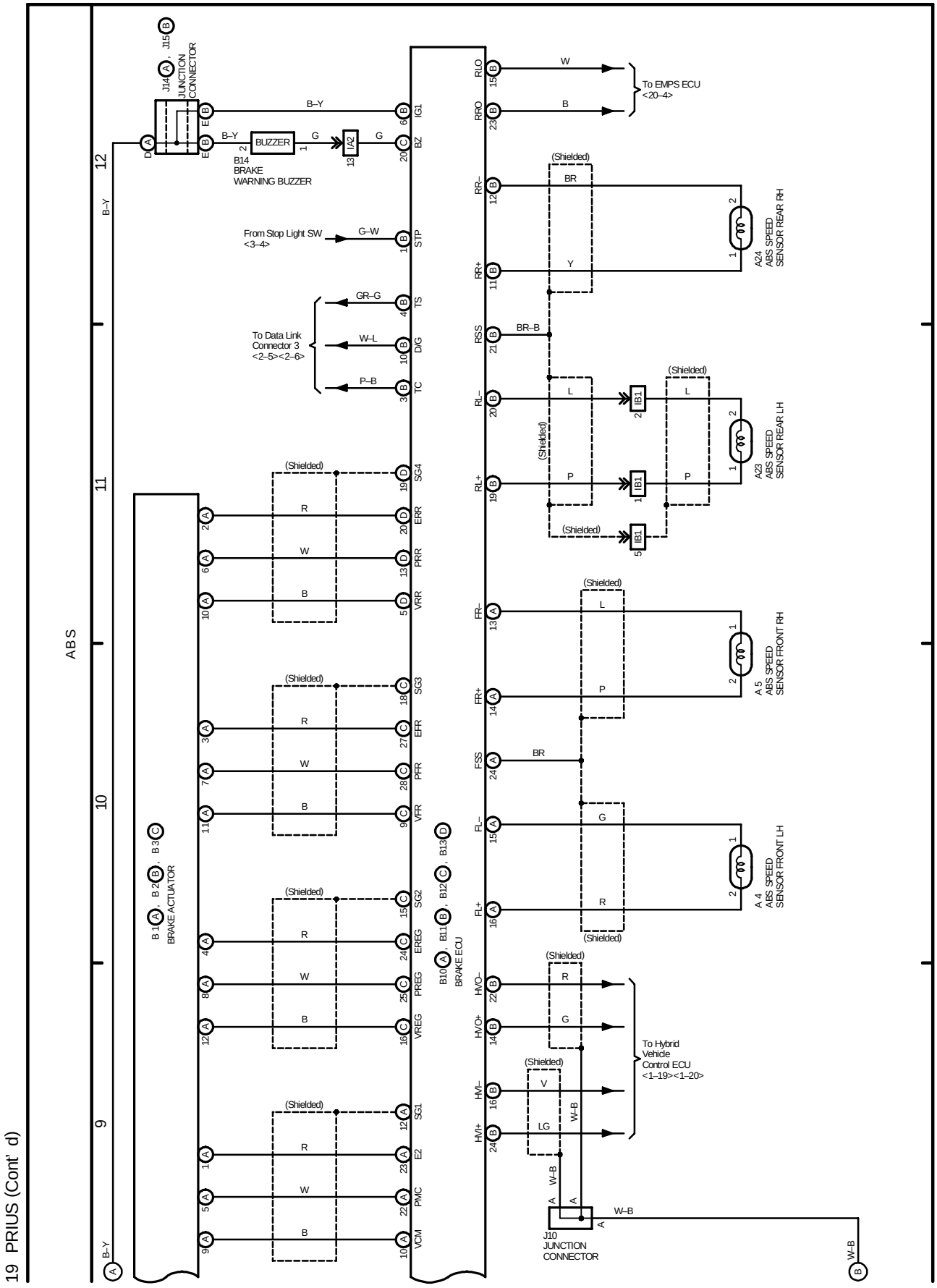
19 PRIUS (Cont' d)
ABS
12
11
10
9
B–Y
J14 (A), J15 (B) JUNCTION CONNECTOR
B–Y
BUZZER
B14 BRAKE WARNING BUZZER
IA2
BZ
From Stop Light SW <3–4>
G–W
STP
To Data Link Connector 3 <2–5><2–6>
GR–G
TS
W–L
D/G
P–B
TC
B 1 (A), B 2 (B), B 3 (C) BRAKE ACTUATOR
B10 (A), B11 (B), B12 (C), B13 (D) BRAKE ECU
SG4
ERR
PRR
VRR
SG3
EFR
PFR
VFR
SG2
EREG
PREG
VREG
SG1
E2
PMC
VCM
RLO
RRO
To EMPS ECU <20–4>
RR–
RR+
RSS
RL–
RL+
A24 ABS SPEED SENSOR REAR RH
A23 ABS SPEED SENSOR REAR LH
IB1
FR–
FR+
FSS
FL–
FL+
A 5 ABS SPEED SENSOR FRONT RH
A 4 ABS SPEED SENSOR FRONT LH
HVO–
HVO+
HVI–
HVI+
To Hybrid Vehicle Control ECU <1–19><1–20>
J10 JUNCTION CONNECTOR
W–B
(Shielded)

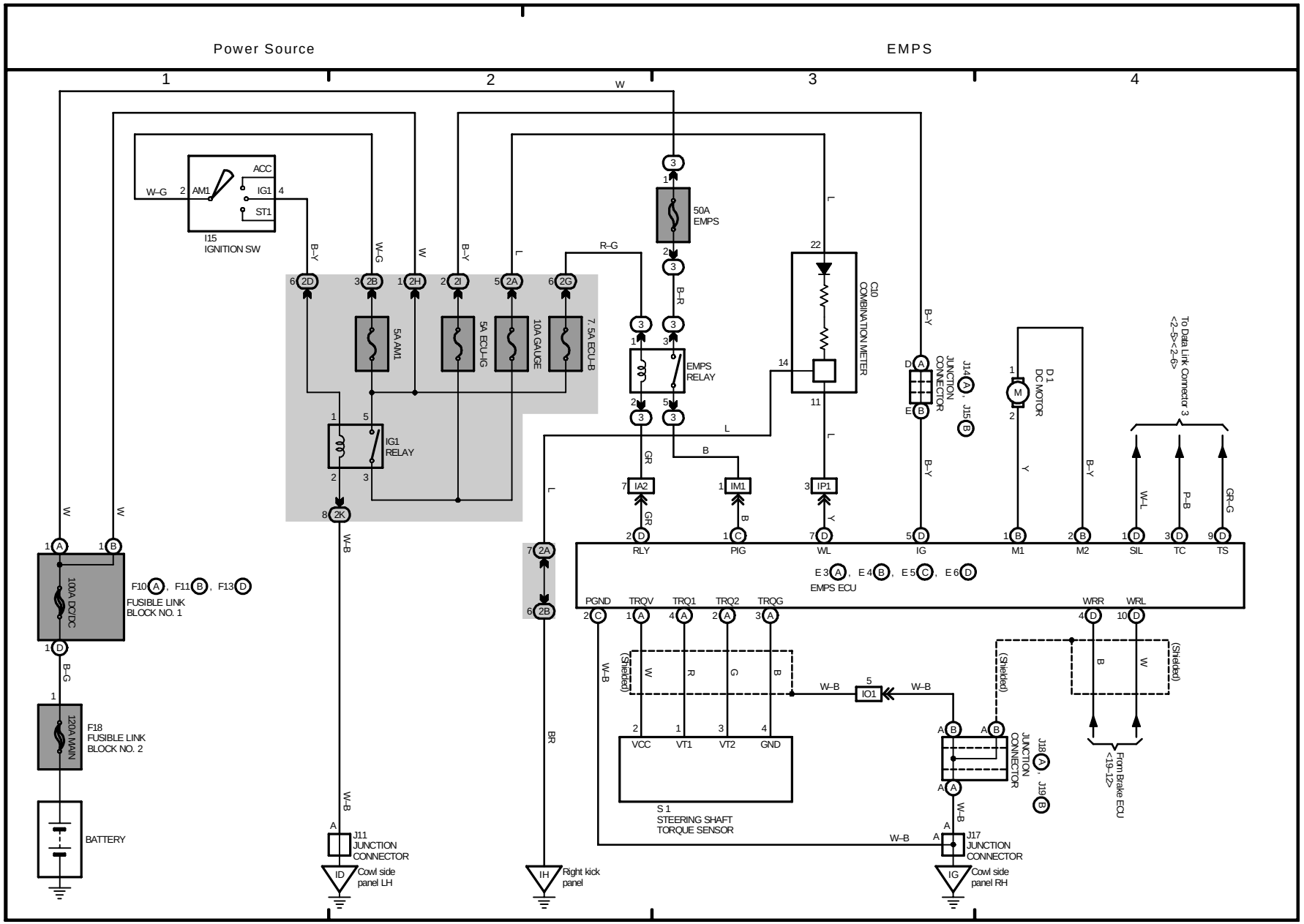
Power Source
EMPS
1
2
3
4
W
ACC
IG1
ST1
AM1
W–G
I15
IGNITION SW
B–Y
W–G
W
B–Y
L
R–G
50A
EMPS
B–R
5A AM1
5A ECU–IG
10A GAUGE
7. 5A ECU–B
EMPS
RELAY
IG1
RELAY
C10
COMBINATION METER
B–Y
J14
J15
JUNCTION
CONNECTOR
D1
DC MOTOR
To Data Link Connector 3
<2–5><2–6>
W–L
P–B
GR–G
GR
B
Y
IA2
IM1
IP1
RLY
PIG
WL
IG
M1
M2
SIL
TC
TS
E3 A , E4 B , E5 C , E6 D
EMPS ECU
PGND
TRQV
TRQ1
TRQ2
TRQG
WRR
WRL
W–B
(Shielded)
W
R
G
B
IO1
VCC
VT1
VT2
GND
S1
STEERING SHAFT
TORQUE SENSOR
J18
J19
From Brake ECU
<19–12>
100A DC/DC
F10 A , F11 B , F13 D
FUSIBLE LINK
BLOCK NO. 1
B–G
120A MAIN
F18
FUSIBLE LINK
BLOCK NO. 2
BATTERY
J11
JUNCTION
CONNECTOR
ID
Cowl side
panel LH
BR
IH
Right kick
panel
J17
JUNCTION
CONNECTOR
IG
Cowl side
panel RH

M OVERALL ELECTRICAL WIRING DIAGRAM

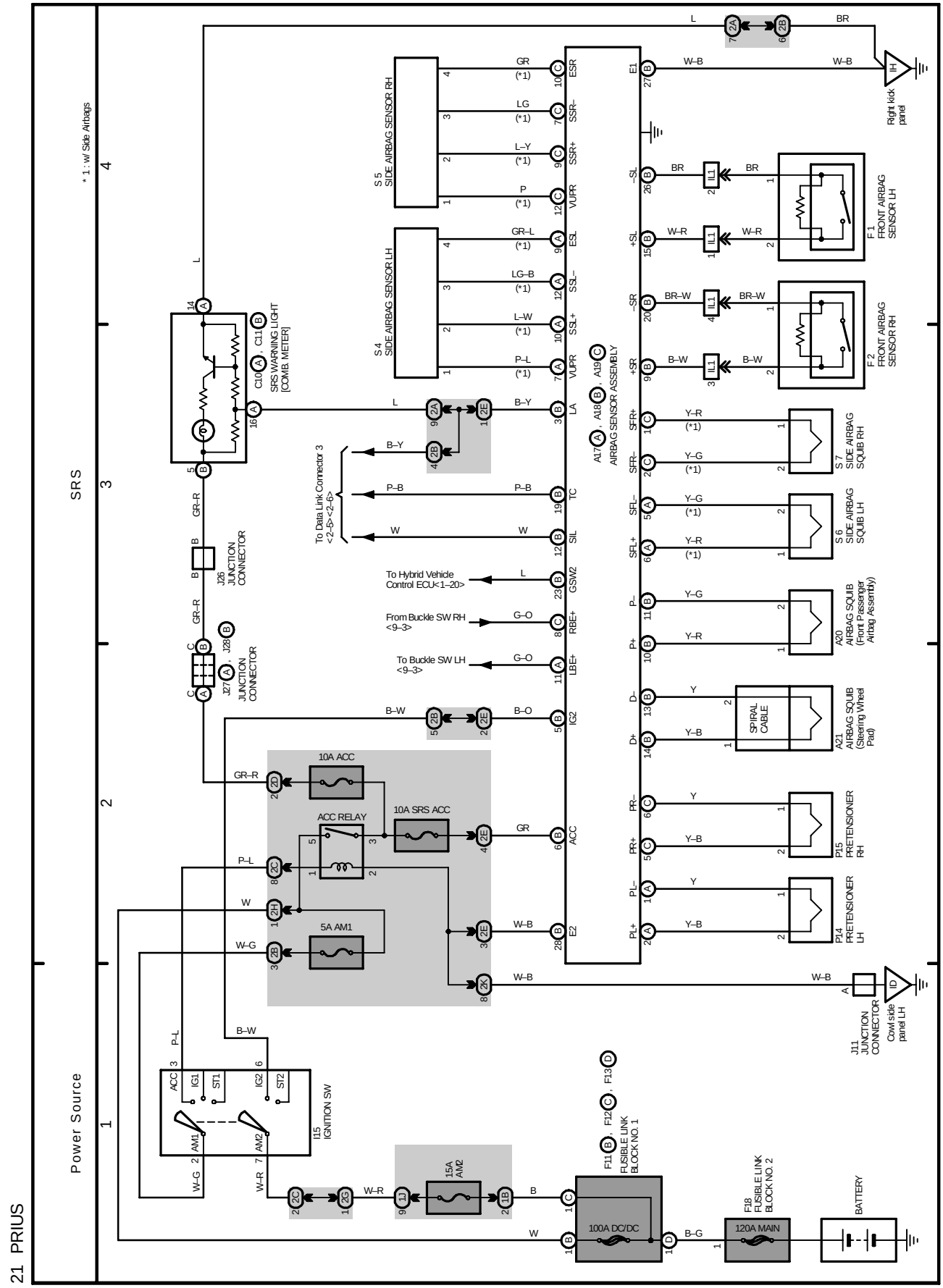

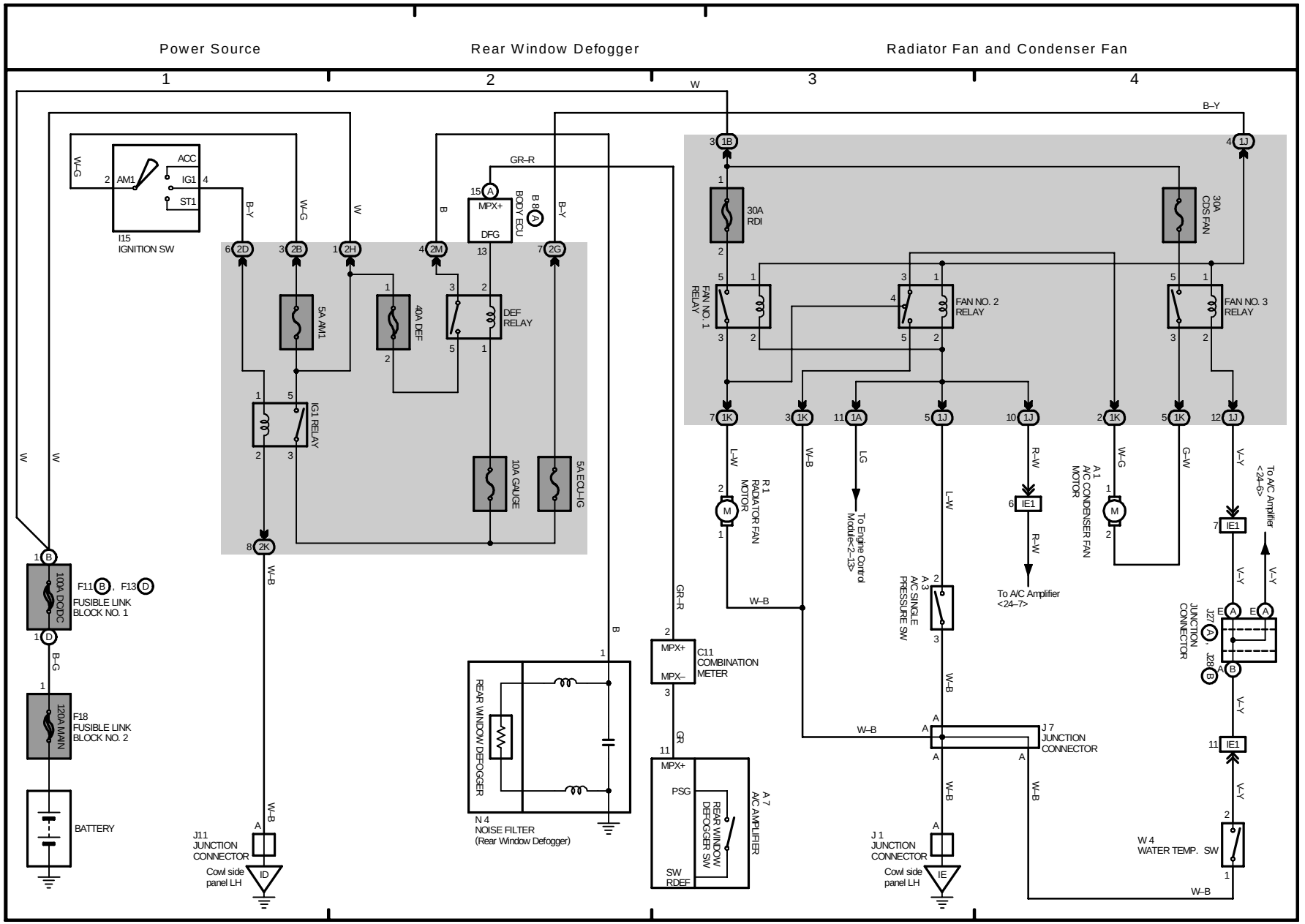
Power Source
Rear Window Defogger
Radiator Fan and Condenser Fan
1
2
3
4
I15
IGNITION SW
ACC
IG1
ST1
AM1
5A AM1
40A DEF
DEF RELAY
IG1 RELAY
10A GAUGE
5A ECU-IG
30A RDI
30A CDS FAN
FAN NO. 1 RELAY
FAN NO. 2 RELAY
FAN NO. 3 RELAY
R 1
RADIATOR FAN MOTOR
A 1
A/C CONDENSER FAN MOTOR
A 3
A/C SINGLE PRESSURE SW
To Engine Control Module<2-13>
To A/C Amplifier <24-6>
To A/C Amplifier <24-7>
100A DC/DC
F11, F13
FUSIBLE LINK BLOCK NO. 1
120A MAIN
F18
FUSIBLE LINK BLOCK NO. 2
BATTERY
J11
JUNCTION CONNECTOR
Cowl side panel LH
REAR WINDOW DEFOGGER
N 4
NOISE FILTER
(Rear Window Defogger)
C11
COMBINATION METER
MPX+
MPX-
DFG
PSG
SW RDEF
REAR WINDOW DEFOGGER SW
A 7
A/C AMPLIFIER
BODY ECU
J 7
JUNCTION CONNECTOR
J 1
JUNCTION CONNECTOR
Cowl side panel LH
J27
J28
JUNCTION CONNECTOR
W 4
WATER TEMP. SW

M OVERALL ELECTRICAL WIRING DIAGRAM

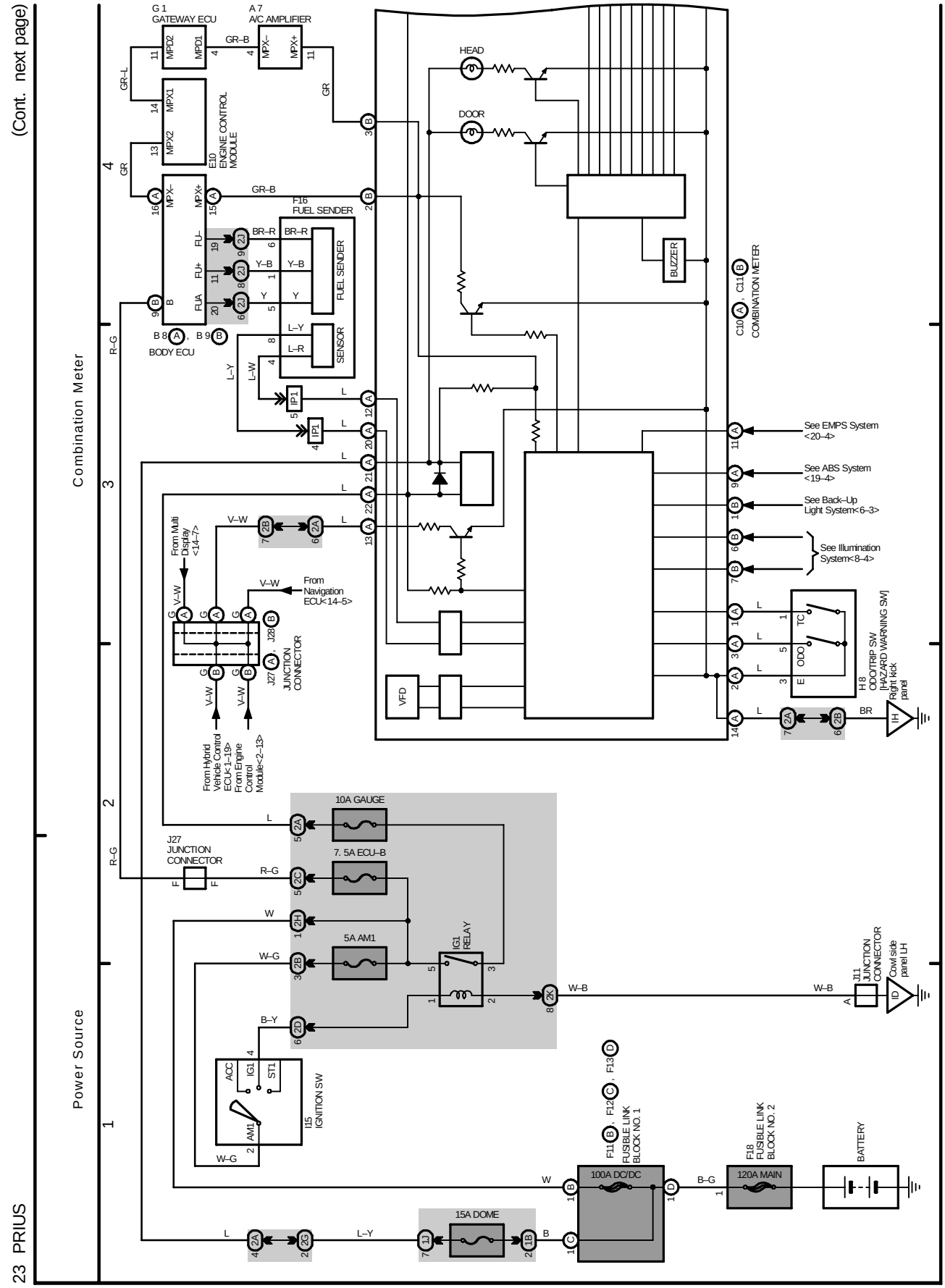

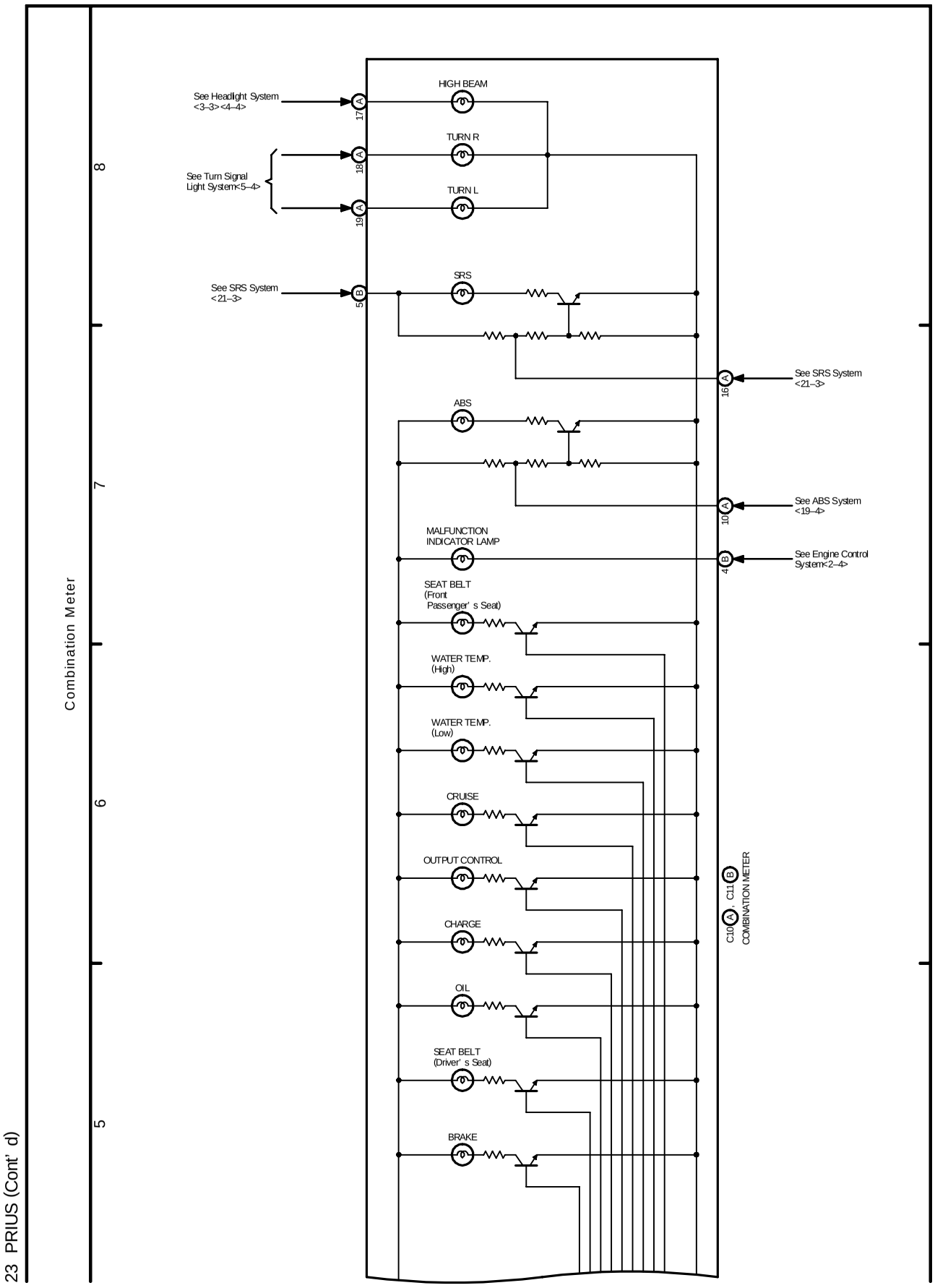
23 PRIUS (Cont' d)
Combination Meter
8
7
6
5
See Headlight System <3–3> <4–4>
See Turn Signal Light System<5–4>
See SRS System <21–3>
HIGH BEAM
TURN R
TURN L
SRS
ABS
MALFUNCTION INDICATOR LAMP
SEAT BELT (Front Passenger' s Seat)
WATER TEMP. (High)
WATER TEMP. (Low)
CRUISE
OUTPUT CONTROL
CHARGE
OIL
SEAT BELT (Driver' s Seat)
BRAKE
17 A
18 A
19 A
5 B
16 A
10 A
4 B
See SRS System <21–3>
See ABS System <19–4>
See Engine Control System<2–4>
C10 A, C11 B
COMBINATION METER

M OVERALL ELECTRICAL WIRING DIAGRAM

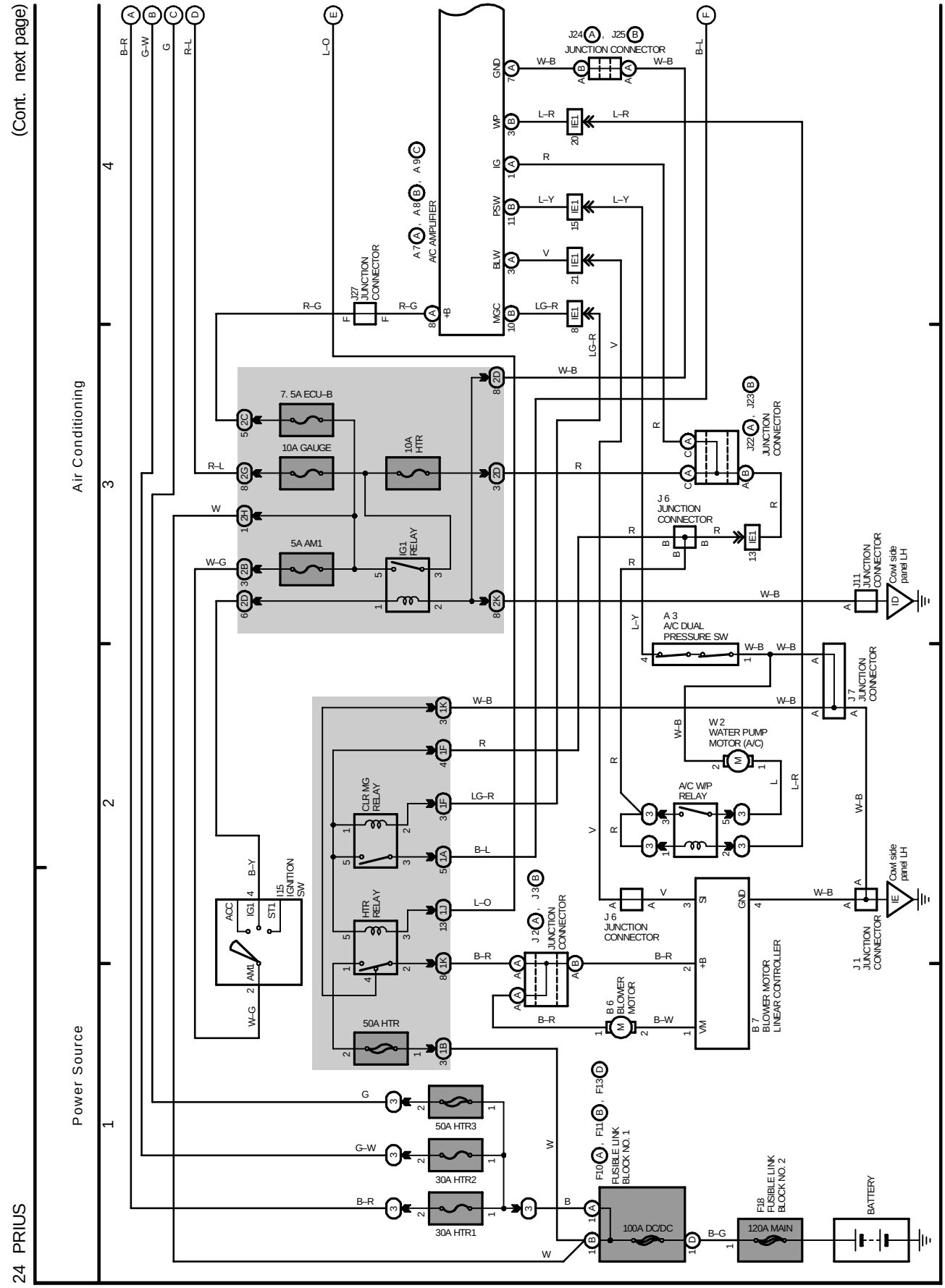

(Cont. next page)

Air Conditioning

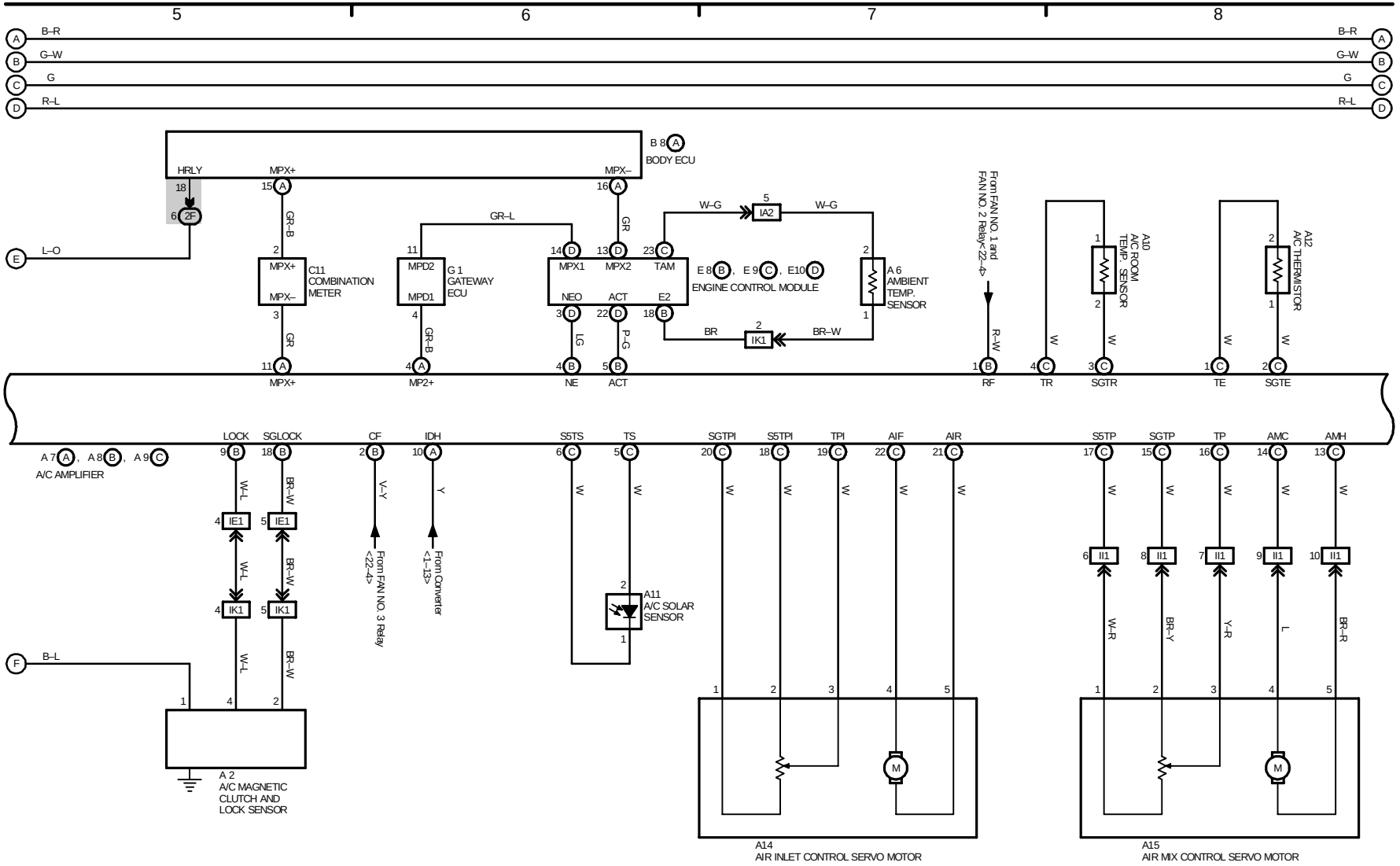

M OVERALL ELECTRICAL WIRING DIAGRAM

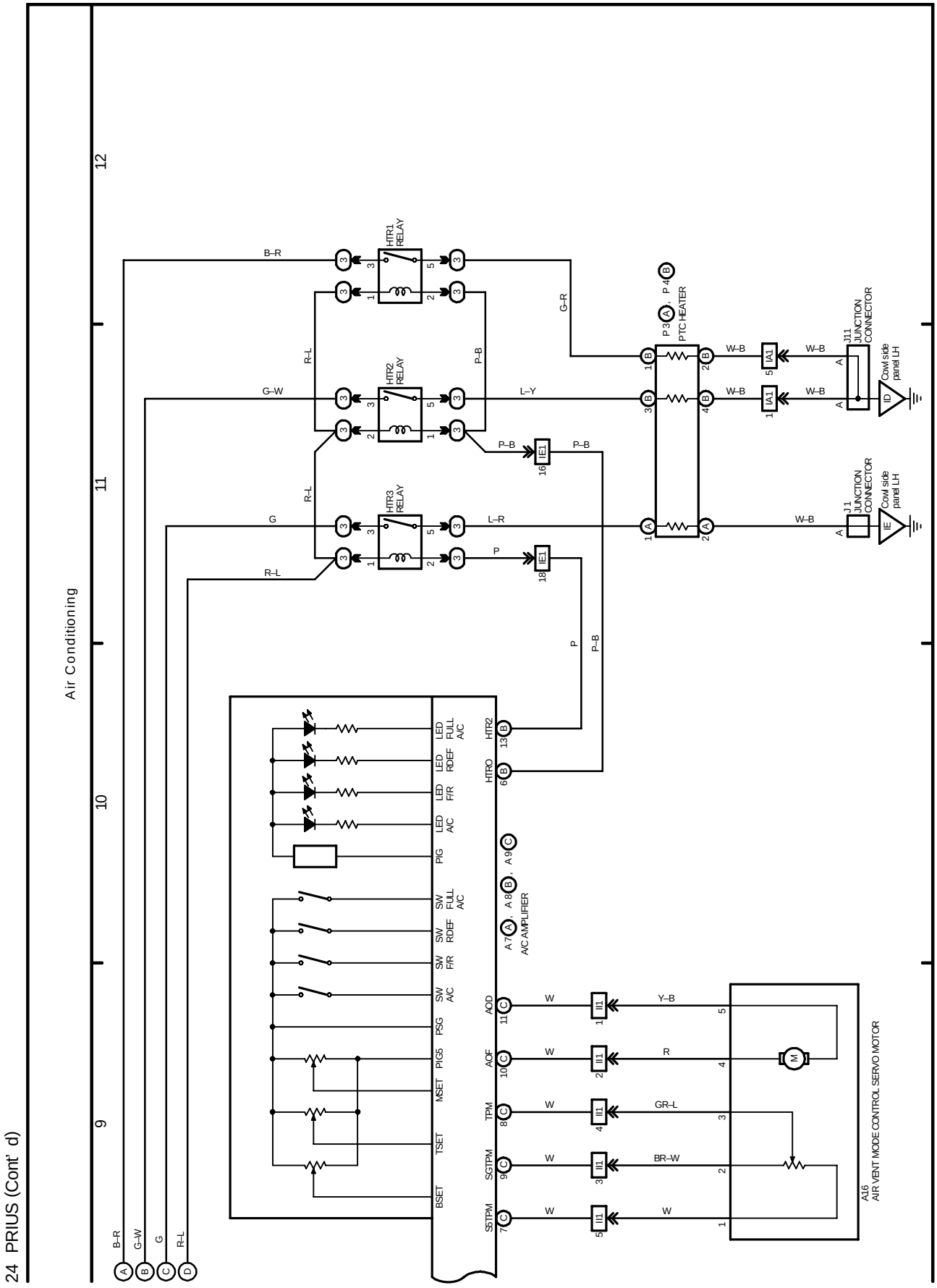

FOREWORD

To assist you in your sales and service activities, this manual explains the main characteristics of the new PRIUS, in particular providing a technical explanation of the construction and operation of new mechanisms and new technology used.

Applicable models: NHW11 series

This manual is divided into 4 sections.

1. **Introduction** – Exterior appearance and model code.
2. **New Model Outline** – Explanation of the product to give a general understanding of its features.
3. **Technical Description** – Technical explanation of the construction and operation of each new system and component.
4. **Appendix** – Major technical specifications of the vehicle.

CAUTION, NOTICE, *REFERENCE* and **NOTE** are used in the following ways:

CAUTION	A potentially hazardous situation which could result in injury to people may occur if instructions on what to do or not do are ignored.
NOTICE	Damage to the vehicle or components may occur if instructions on what to do or not do are ignored.
REFERENCE	Explains the theory behind mechanisms and techniques.
NOTE	Notes or comments not included under the above 3 titles.

For detailed service specifications and repair procedures, refer to the following Repair Manuals:

Manual Name	Pub. No.
● 2001 PRIUS Repair Manual	RM778U
● 2001 PRIUS Electrical Wiring Diagram	EWD414U

All information contained herein is the most up-to-date at the time of publication. We reserve the right to make changes without prior notice.

TOYOTA MOTOR CORPORATION

© 2000 TOYOTA MOTOR CORPORATION
All rights reserved. This book may not be reproduced or copied, in whole or in part, without the written permission of Toyota Motor Corporation.
First Printing: Apr. 5, 2000 01-000405-00

EXTERIOR APPEARANCE



182IN01



182IN02

MODEL CODE AND MODEL LINE-UP

MODEL CODE

NHW11	L	–	A	E	E	E	B	A
1	2		3	4	5	6	7	8

1	**BASIC MODEL CODE**
	NHW11: With 1NZ-FXE Engine

2	**STEERING WHEEL POSITION**
	L: Left-Hand Drive

3	**MODEL NAME**
	A: Prius

4	**BODY TYPE**
	E: 4-Door Sedan

5	**GEAR SHIFT TYPE**
	E: Automatic, Column

6	**GRADE**
	E: Standard

7	**ENGINE SPECIFICATION**
	B: Atkinson

8	**DESTINATION**
	A: U.S.A. K: Canada

MODEL LINE-UP

DESTINATION	ENGINE	BODY TYPE	GRADE	TRANSAXLE
				Automatic
				P111
U.S.A.	1NZ-FXE	Sedan	Standard	NHW11L-AEEEBA
Canada				NHW11L-AEEEBK

– MEMO –

INTERIOR

An interior which reflects the type of comfort that will be regarded as a must in cars hereinafter.

Package

The Prius package gives highest priority to driver and passenger comfort.

- A spacious cab that is hard to imagine in a car of this size.
- Spacious head clearance for a more open feel.
- Ideal seat height for easy access.
- An easy-to-use luggage compartment with ample space.

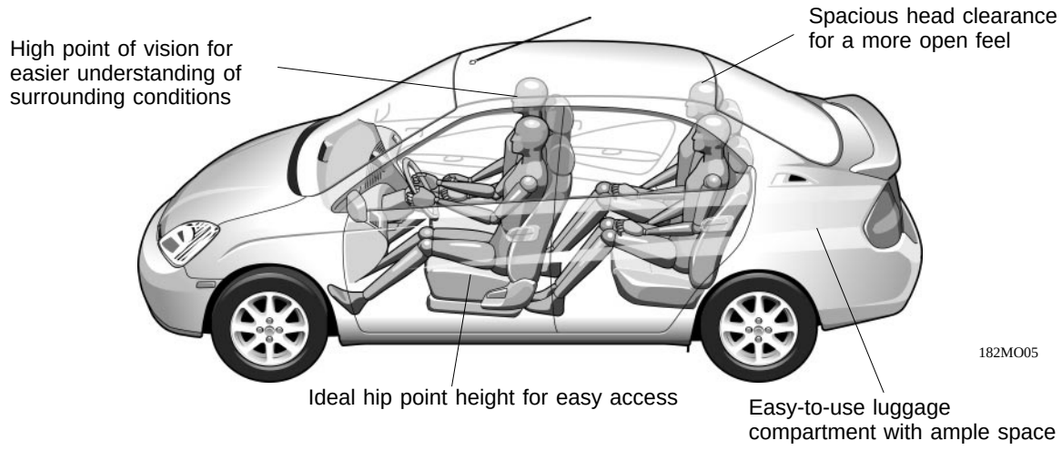

Instrument Panel

The instrument panel is a balanced combination of functionality and symmetry.

- Human-engineered layout perfectly suited to the new age, with centrally positioned operational functions.

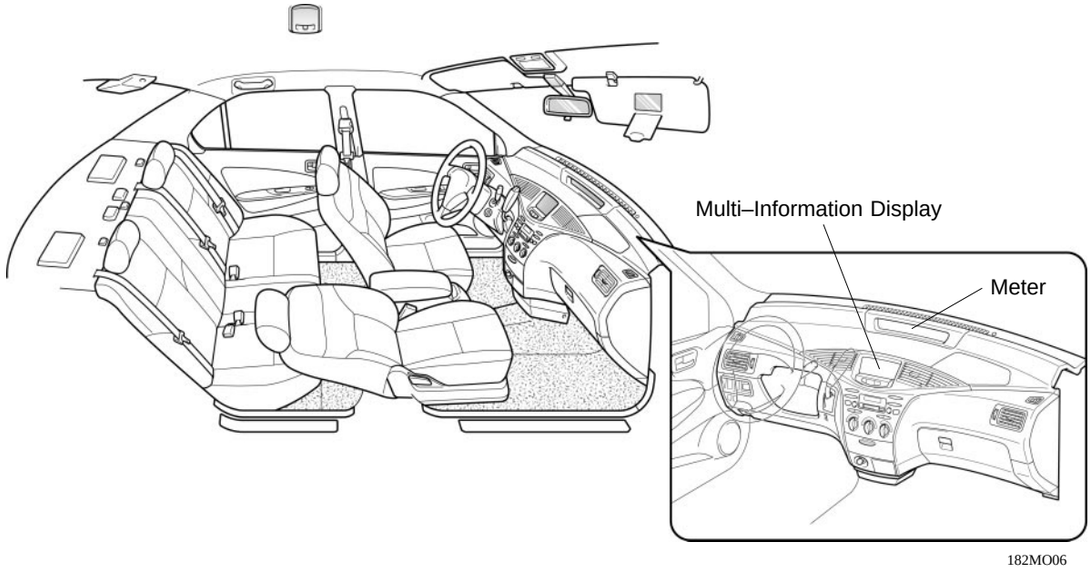

Meter

A digital-display combination meter is located in the uppermost, center position of the instrument panel. This ensures ease of visual confirmation, including that of all indicators.



(For U.S.A.)

182MO07

Seat

[Front Seat]

- The pads fitted on the side of the seatback are of a different degrees of hardness, ensuring a superior hold.
- A seatback pocket has been included on the front seat providing additional and convenient storage space.

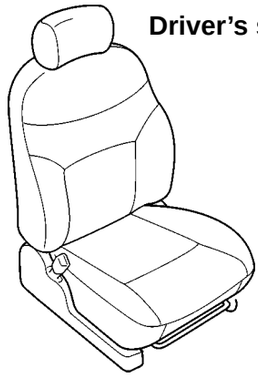

Driver's seat

182MO08

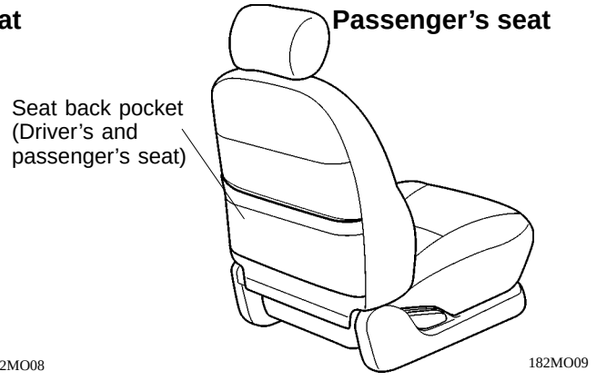

Passenger's seat

182MO09

[Rear Seat]

- Three CRS anchor brackets that FMVSS225-certified have been fitted on the top section of the package tray trim to facilitate the mounting of child seats.
- An FMVSS225-certified child-seat CRS lower anchorage is fitted on both outer-side seats.

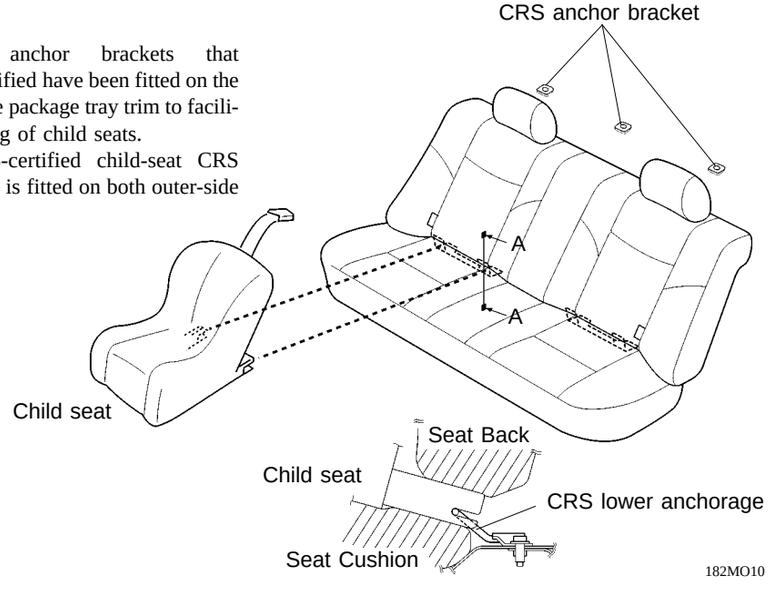

182MO10

A – A Cross Section

MAIN MECHANISM

Low-emission & high-fuel efficiency. TOYOTA hybrid system leading the way into the next generation.

Tackling the challenge for high fuel efficiency and low emissions

Prius - the mass-production gasoline hybrid vehicle - already meets all of the various strict emission levels being proposed throughout the world, well ahead of the competition. What's more, through the use of the hybrid system, surpassing fuel efficiency and a massive reduction in CO_2 has become a reality. The Prius can truly be acclaimed as "the clean and environmentally friendly vehicle."

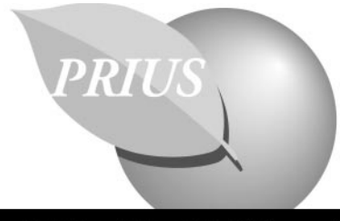

PRIUS achieved SULEV (California) for exhaust emissions.

Emission Reduction Features

1. Precision Emission Control

Through full utilization of the two Oxygen sensors, precision emission control is made possible even when the engine is frequently stopped and re–started. Furthermore, excellent purification of exhaust gas is ensured through the catalytic converter, resulting in reduced emissions.

2. Vapor Reducing Fuel Tank System

We have developed a new fuel tank system that can dramatically reduce the amount of fuel vapor generated in the tank both when the vehicle is moving as well as when it is at a standstill. This system is the first one in the world to be used.

3. TOYOTA HC Adsorber and Catalyst System

A new system has been adopted which adsorbs the HC that is emmitted between the time the engine is cold-started and the catalytic converter is still cool and not yet activated, until the time the catalytic converter becomes active.
After the catalytic converter has been activated, the HC disassociates little by little and is then purified.

4. Adoption of a Thin-walled High-density Cell Catalytic Converter

In order to reduce the amount of time taken until the catalytic converter is activated, we developed a catalytic chamber with a super thin ceramic wall. Also, high-density cells have been utilized as a measure to improve strength and increase contact area with exhaust gas. Through these measures we have been able to achieve a balance of reliability and purification efficiency.

TOYOTA Hybrid System (THS)

The TOYOTA hybrid system has two drive sources, one is the gasoline engine and the other, the AC motor. The power train system selects the best combination of the different characteristics of both depending on driving conditions. Also, through the adoption of a regenerative braking system, which recovers energy during deceleration and “idling stop” whereby the engine is stopped during idling, we have been able to provide for maximum energy conservation. This has resulted in a vastly superior fuel economy compared with that of gasoline A/T vehicles of the same displacement.

Gasoline engine + AC motor = TOYOTA Hybrid System (THS)

Tremendous improvement in fuel efficiency & clean achieved!

Features of the System

1. Optimum distribution of drive sources

The most efficient engine operating zone is automatically selected by controlling the optimum distribution of the engine and motor drive energy sources.

2. Reduced energy loss

The engine is automatically stopped when starting and travelling at low load to reduce fuel consumption.*1
The kinetic energy that used to be lost through engine or foot braking is recovered by the regenerative braking system and used for recharging, thereby contributing to improved fuel efficiency. When the driver applies the brakes, the hydraulic and regenerative braking systems are coordinated. In order to recover more energy, a higher proportion of regenerative braking is used.

3. Not required for recharging from an external source

The system uses MG1 (Motor Generator No.1) and MG2 (Motor Generator No.2) to maintain a constant battery charge, so unlike an electric vehicle, recharging from an external source is not required.

*1 : In some cases, the engine does not stop, depending on the air conditioner and HV battery (Hybrid Vehicle Battery) status.

System configuration

◆P111 HYBRID TRANSAXLE

Fitted with built-in THS transaxle MG1 (Motor Generator No.1), MG2 (Motor Generator No.2), power spliting device and reduction gears for the hybrid system. These function to switch engine operation to MG2 assistance, HV battery charging and power generation for driving MG2.

◆Inverter

This controls the current between MG1, MG2 and HV battery and converts DC/AC power.

◆HV Battery (Hybrid Vehicle Battery)

This supplies power to the motor at full load or on engine stopping and stores power recovered by regenerative braking or power generation by MG1. 228 nickel-metal hydride batteries are connected in series to obtain a voltage of 273.6 V DC.

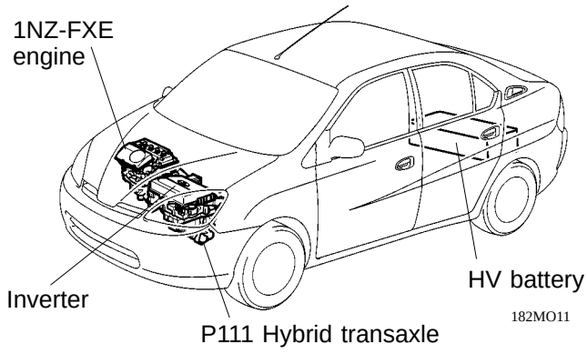

182MO11

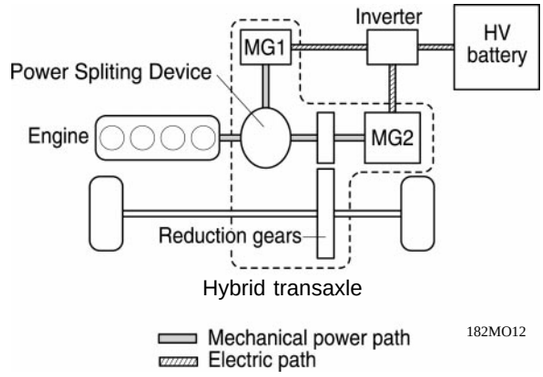

182MO12

MAIN MECHANISM

THS operation

Starting and traveling at low load

When the engine efficiency is low such as when starting, traveling at low load or the engine is stopped, permitting travel by MG2; (however the engine may start under SOC (State Of Charge) of the HV battery.)

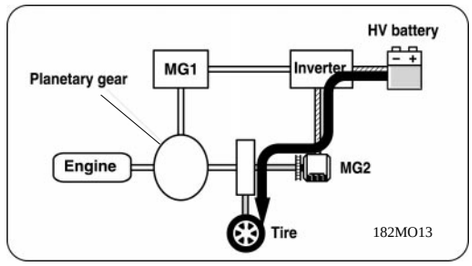

Normal traveling

The engine energy is divided into two. One portion directly drives the wheels. The other portion drives MG1 to drive MG2 by generated power, which also drives the wheels.

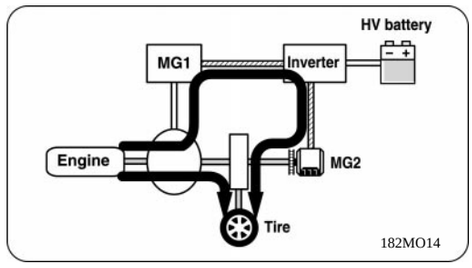

Full acceleration

In addition to the 2-way system for normal travelling, the drive power of MG2 is further supplemented by the power stored in the HV battery, resulting in powerful and smooth acceleration.

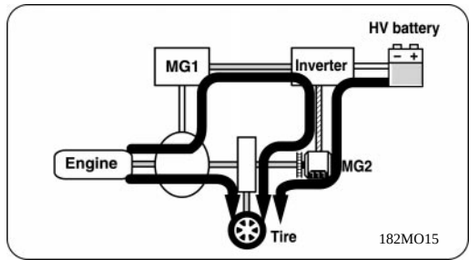

Deceleration or braking

The wheels drive MG2 which acts as the generator for regenerative power generation. The power recovered by generation is stored in the HV battery.

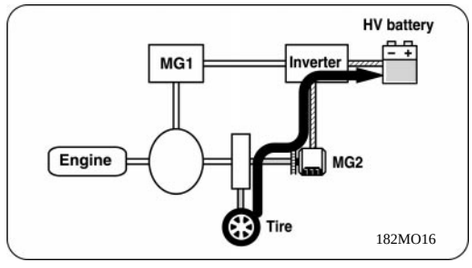

Stopped

When the vehicle is stopped, the engine stops automatically. However, when it is necessary to charge the HV battery or to run the air conditioner compressor, the engine will not stop.

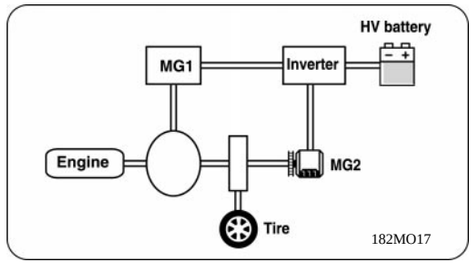

HV Battery Charging

When high load operation is continued, the engine does not stop to charge the HV battery even if the vehicle is stopped, in order to keep the HV battery charged to a given level. (when "READY" light is ON.);however, the engine does not charge the HV battery when the lever is shifted into the "N" position.

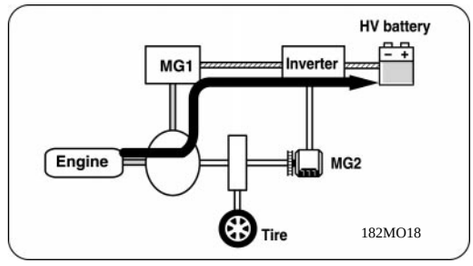

The engine speed may also be increased during normal traveling in order to charge the HV battery.

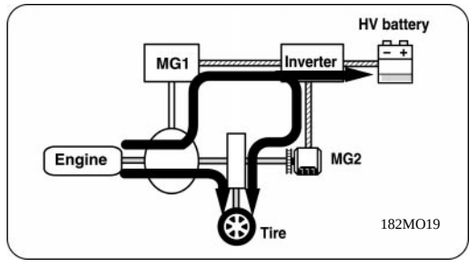

1NZ-FXE Engine

The new Prius is fitted with a 1.5 ℓ gasoline engine which has been developed for the use with the TOYOTA hybrid system. A mass of leading-edge technology has been implemented to achieve excellent fuel economy, low emissions, light weight, compactness, and low vibration and noise.

Outline of the 1NZ-FXE Engine

	1NZ-FXE
Displacement (mℓ)	1,497
Type	DOHC 4 valves
Bore × Stroke (mm)	75.0 × 84.7
Compression ratio	13.0
Maximum output [kW (HP)/rpm]	52 (70)/4,500
Maximum torque [N·m (lb·ft)/rpm]	111 (82)/4,200
Fuel	Gasoline

Engine performance curve

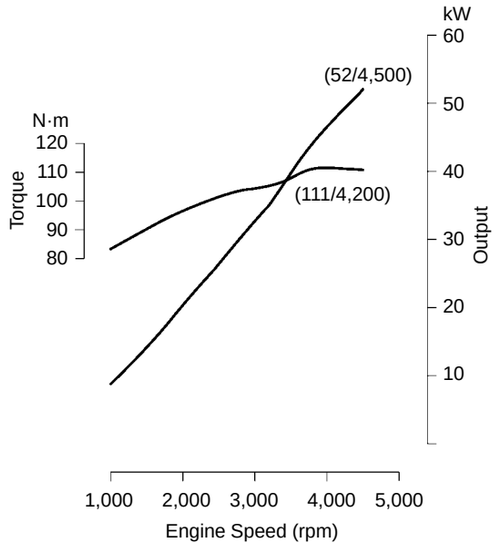

MAIN MECHANISM

4 Features of the 1NZ-FXE engine

1. Highly efficient and high expansion ratio gasoline engine

Adoption of a super fuel-efficient engine developed for use with THS. Its high expansion ratio cycle is achieved by applying the Atkinson cycle*1 which obtains high thermal efficiency.

2. Reduction in frictional loss

The maximum engine speed is set at 4,500 rpm to reduce frictional resistance, thereby producing a highly efficient low-speed engine.

- An offset crankshaft with 12 mm deviation from the center axis of the cylinder bore is utilized to reduce frictional resistance of the piston.
- Frictional resistance is reduced through the use of low tension valve springs and piston rings.
- Lightweight design has been adopted for reciprocating engine parts.

The above measures for reducing frictional loss contribute to improved fuel economy.

3. VVT-i (Variable Valve Timing -intelligent)

The timing of the opening and closing of the intake valves is controlled by the computer according to driving conditions, such as engine speed and level of acceleration. Thus, smooth intake and exhaust are achieved to greatly improve torque in the low and medium speed zones. This also contributes to better fuel economy and purification of exhaust gas. Then the VVT-i function is used to reduce vibration when the engine starts.

4. Compact, lightweight, and low emission

Adoption of an aluminum cylinder block and compact design of parts. And, by positioning the catalytic converter near the engine for a backwards exhaust layout, we have been able to reduce emissions when the engine is cold started.

*1 : Atkinson Cycle: Proposed by an English engineer named James Atkinson, this thermal cycle enables the compression stroke and the expansion stroke of the mechanism to be set independently of each other.

Suspension

MacPherson strut type suspension with L-shape lower arms has been adopted in the front and torsion beam with toe control link suspension in the rear. Also, each component part is optimally located and tuned for both excellent controllability and enhanced riding comfort.

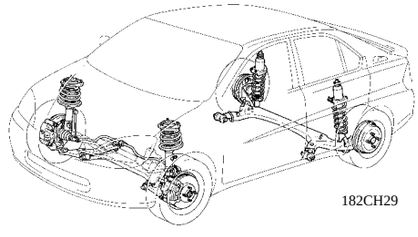

182CH29

EMPS (Electric Motor-assisted Power Steering) System

Vehicle speed sensing type electric motor-assisted power steering is fitted as standard. Unlike conventional hydraulic power steering, EMPS does not depend on an engine for its power source, providing a steering feel in no way inferior to conventional steering when the engine has stopped. Thus it is suitable for the HV system. Other merits include improved fuel economy through energy conservation, lighter weight, and no need to fill the power steering fluid.

MAIN EQUIPMENT

A range of features for comfort - the more you use them, the better they get.

Multi-Information Display

- The 5.8” wide touch panel type multi-information color LCD is standard.
- Energy monitor, fuel consumption and other vehicle information screens, audio operation status and audio operation screen can be indicated on the multi-information display. The outside temperature are also indicated on the screen.

[Audio system]

- An AM/FM cassette and 4-speaker system compatible with the multi-information display has been adopted.
- As the touch panel type display is used to operate the audio system, the multi-information display simultaneously indicates the operating status of the audio system.
- The antenna provided is a collapsible style pole antenna positioned at the center of the roof.

[GPS Voice Navigation]

- A GPS (Global Positioning System) voice navigation system is optional.
- The multi-information display can show the map on favorite type among turn list, arrow display and enlarged intersection.
- Using DVD (Digital Versatile Disk) as a memory source for map data, a large quantity of information can be processed.

• Main Function of the Multi-information Display

Screen	Function
Map screen display (option)	Enlargement / reduction, rotation and movement of map
	Indication of current position and direction of travel
	Correction of current position
	Setting, change and indication of route
	Voice guidance
	Indication of enlarged intersections
	Memory and indication of map position
Audio screen	Status of audio equipment and audio operation screen indication
Information screen	Energy monitor screen indication
	Fuel consumption screen indication
Adjustment screen	Sound quality adjustment screen indication
	Image quality adjustment screen indication
	No indication
On-screen indication	Audio status indication
	Warning indication
Interrupt screen	Warning indication
Diagnosis screen display	Displays system diagnosis
	Displays various types of coefficient settings

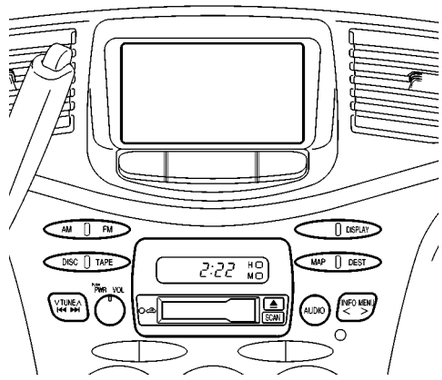

182MO20

[Information Screen]

<Energy monitoring screen>

This screen indicates the direction of energy transmission. It is also possible to check the current drive method (engine, motor or both) and status of power generation by the engine and that of charging regenerative energy.

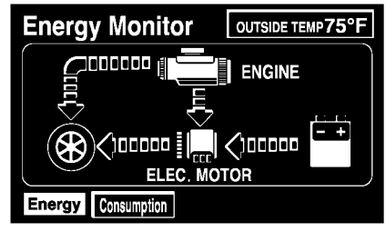

182BE36

<Fuel consumption screen>

This screen indicates the average fuel consumption, amount of recovered energy and fuel consumption for that moment. Average fuel consumption is displayed at 5-minutes intervals. The recovered energy display indicates the amount of energy recovered over the past 5 minutes, with each mark representing 50Wh.

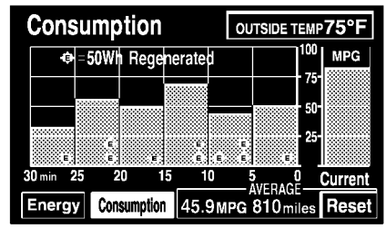

182BE37

MAIN EQUIPMENT

Air Conditioning

An automatic air conditioning has been adopted in consideration to ease of use.

- A clean air filter which removes pollen and dust is included as a standard fitting for purifying the air inside the cab.
- Two air conditioning modes, A/C for economical air conditioning and MAX for especially strong air conditioning, are provided.

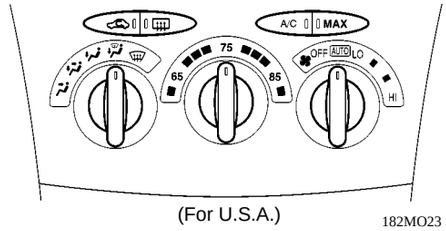

(For U.S.A.) 182MO23

Wireless Door Lock Remote Control System

With the wireless door lock remote control system, all the doors can be locked and unlocked by signals emitted by the transmitter.

Power Window System

A power window system which enables all windows to be raised or lowered with switches has been adopted. An auto up/down function and jam protection function have been added to the driver's power window.

HV Immobiliser System

HV immobiliser system will not allow the HV system to be started by duplicate key is used. This system will permit the HV system to be started only when the ID code of the transponder chip impregnated in the key matches the ID code registered beforehand in the transponder key amplifier.

Theft Deterrent System

When an attempt is made to forcibly enter the vehicle or open the hood or trunk lid without a key, or when the battery terminals are removed and reconnected, this system sounds the horn and flashes the headlights, taillights and emergency flashers for about 1 minute to alert the owner. At the same time, it locks all the doors.

Storage Space

Ample storage space with an emphasis on practicality provided throughout the Prius.

Instrument panel (passenger seat)

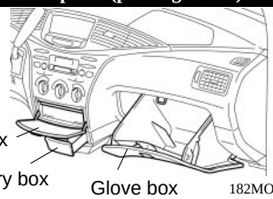

182MO24

Seat back pocket

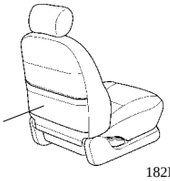

182MO09

Front door pocket

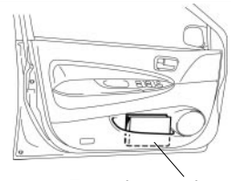

182MO25

Center console box

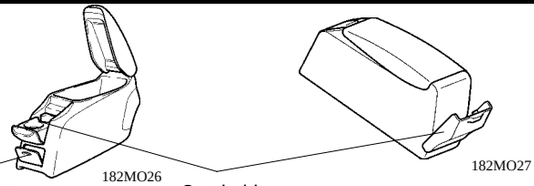

182MO26 182MO27

Luggage space

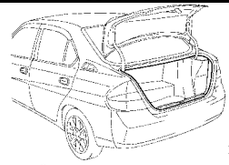

182MO28

11.839ft^3 (by SAE suitcase method) luggage space is secured.

SAFETY

Prius – one step ahead of the rest even in the area of safety.
Drive with the utmost peace of mind.

Passive Safety Body

The impact absorbing body adopted for the new Prius effectively absorbs and distributes the impact from front and side collisions to ease the effects of the impact on the driver and passengers, and the high-strength body structure minimizes deformation of the cabin itself.

[Frontal collision]

The front section of the body frame and under body absorb and distribute the load generated by a frontal collision, while the strong cabin frame eases the effect of the impact on the driver and passengers and minimizes deformation of the cabin, thus realizing an ideal body structure.

The front side member is of a straight design to be deformed effectively from the front end. Also, in the event of a front collision, the force of the impact is effectively distributed to each of the braces and members through the sections where they join the cabin.

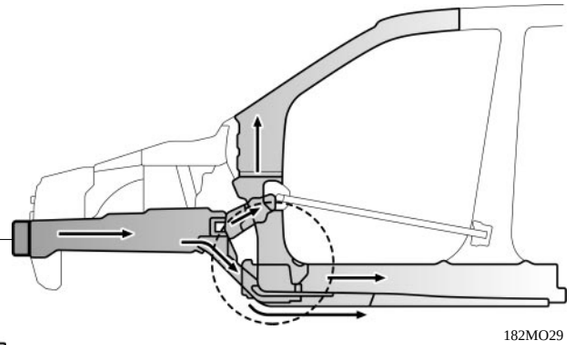

182MO29

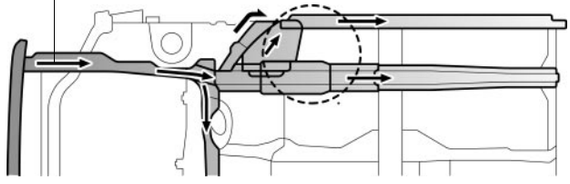

182MO30

[Side collision]

Along with the ideal body structure which effectively absorbs and distributes the load on the frame in side collisions, we have maintained the strength of each pillar, rocker panel and door to minimize deformation of the cabin.

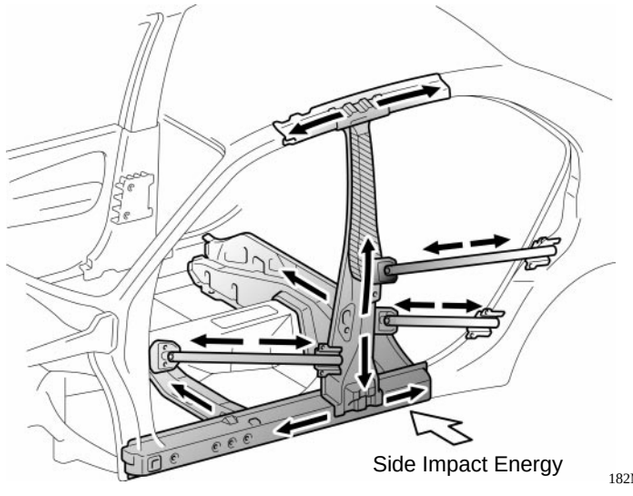

182MO31

SAFETY

Head Impact Protection Structure

The construction of the pillar trims and roof side adopted gives full consideration to protecting the heads of the driver and passengers from injury in the event of a collision. In addition, impact absorbing material has been built into the interior of each pillar trim and roof side which are most likely to be the cause of head injuries in a collision.

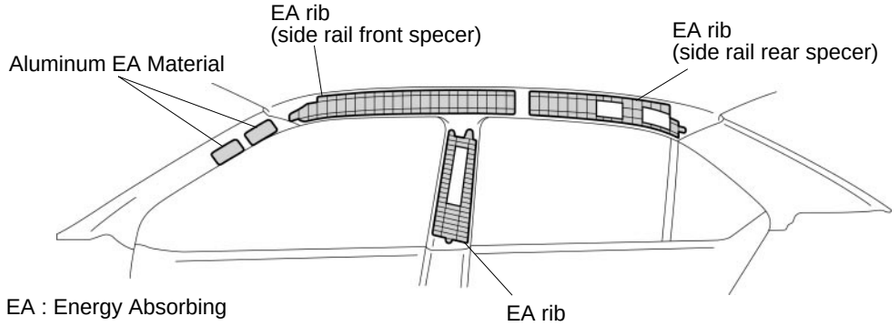

SRS Airbag

SRS airbags are standard for the driver and front passenger seats on all models. In the event of a frontal collision, the airbags function to support the seatbelts in reducing the impact to the driver and front passenger. Also, SRS side airbags are available as a option. The SRS side airbags have been designed to help reducing the impact energy that is transmitted to the driver and front passenger in the event of a side collision.

Seatbelt with Pre-tensioner and Force-limiting Mechanism

Three-point type seatbelts with pre-tensioner and force limiter are standard on the front seats of all models. An ELR-equipped seatbelt is provided on the driver's side and an ALR/ELR selectable one on the passenger side.

Three sets of 3-point type ALR/ELR selectable seatbelts are fitted on the rear seats.

CONCEPT

Introducing the Prius – the car that is friendly to both the earth and to people! ... and announcing of a new feel of future worth.

When we consider the future of the earth, this car was deemed to become a necessary part of it.
A car that is unbelievably friendly and comfortable while still maintaining a high degree of practicality...
The answer to this is the car we would like to present to you here – the Prius.
A streamlined and artistic exterior design combined with a safety features that would make anyone feel at ease.
What's more, through selecting the TOYOTA hybrid system which effectively utilizes 2 power sources – electricity and gasoline – we have been able to achieve world top-class level fuel economy and low emissions.
TOYOTA is proud to present the "Hybrid Car Prius" as a car that is ideal for now and well into the future as well.
The Prius leads the way in the showing direction that cars must go in the 21st century.



182IN01

Prius – a 4-door compact sedan
5 Features to lead the way into the next generation

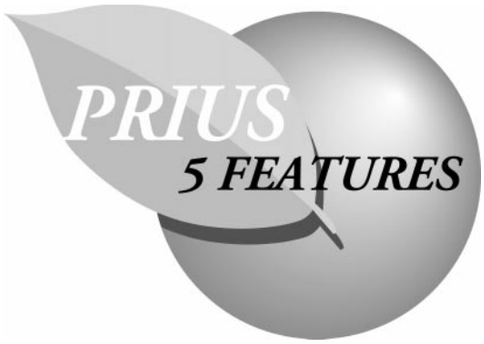

POINT1 Exterior

Futuristic image and symmetry are reflected in the artistic design of the new Prius.

POINT2 Interior

An interior which reflects the type of comfort that will be regarded as a must in cars hereinafter.

POINT3 Main Mechanism

Low-emission & high-fuel efficiency.
TOYOTA hybrid system leading the way into the next generation.

POINT4 Main Equipment

A range of features for comfort - the more you use them, the better it gets.

POINT5 Safety

Prius - one step ahead of the rest even in the area of safety.
Drive with the utmost peace of mind.

EXTERIOR

Futuristic image and symmetry are reflected in the artistic design of the new Prius.

Front Design

A short slanted hood highlights the singular front design.

- The defined character lines from the front fender curving around to the rear give off a fresh appeal.
- Crystal-look front combination lamps and compact grille finish off the masked look.



182IN01

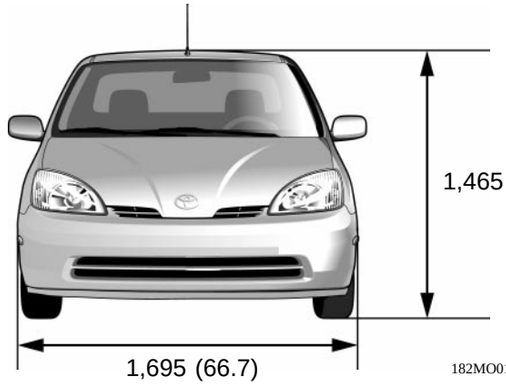

182MO01

Rear Design

The simple rear design gives out an impression of stability.

- Three-dimensional panel make-up produces a perfect balance in its feeling of presence and stability for the rear view.
- The rear combination lamps extend around to the sides, giving emphasis to the wide image.



182IN02

Side Design

A mono-form silhouette is the basis of the ultra modern side view.

- The short overhang adopted reflects the consideration given to minimize the turning radius. And the long wheelbase brings better riding comfort and spacious cabin.

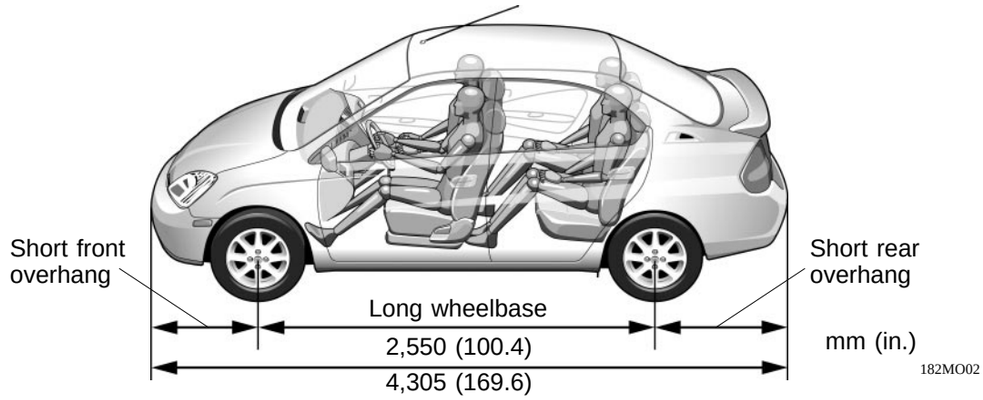

Aerodynamics

The upper body profile provides smooth airflow through the free use of computer simulation. Furthermore, the front tire fairing, rear tire fairing, rear spoiler and flat under-body, among others achieve an excellent drag coefficient of CD = 0.29.



Disc Wheel

Aluminum wheels are fitted standard on all models.

Size	Design
P175/65 R14 5 1/2JJ	 182MO04

ENGINE

1NZ-FXE ENGINE

■DESCRIPTION

The Prius uses the 1NZ-FXE engine that has been newly developed for hybrid system application. Based on the 1NZ-FE engine, the high-expansion ratio Atkinson cycle has been adopted. It is an in-line 4-cylinder, 1.5-liter, 16-valve DOHC engine.
This engine has adopted the VVT-i (Variable Valve Timing-intelligent) system has been developed to realize high performance, quietness, fuel economy and clean emissions.

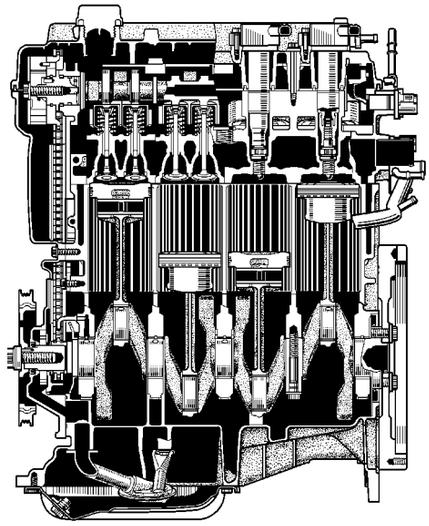

182EG01

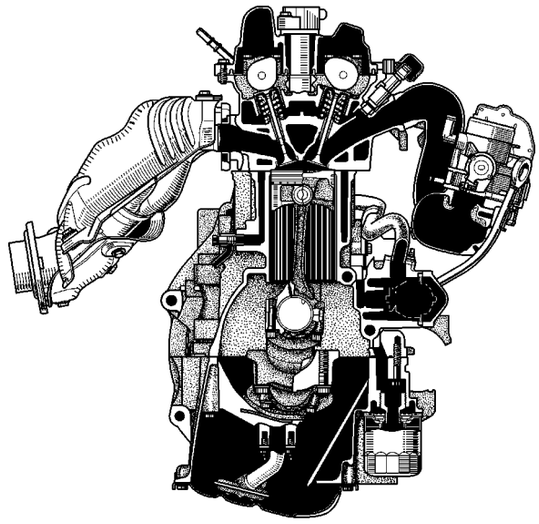

182EG02

– REFERENCE –

Atkinson Cycle: Proposed by an English engineer named James Atkinson, this thermal cycle enables the compression stroke and the expansion stroke of the mechanism to be set independently of each other. Later, this concept was realized by the American R. H. Miller, who developed a system called the Miller Cycle in which the opening and closing timing of the intake valves was made adjustable. Because this system does not generate high output, there is no practical application for this system unless it is combined with a supercharger; however, this system offers a high level of thermal efficiency.
On Prius, this weak point can be covered by combining the Atkinson cycle engine with THS.

▶ Engine Specifications ◀

Engine Type			1NZ-FXE	1NZ-FE (ECHO)
No. of Cyls. & Arrangement			4-Cylinder, In-line	←
Valve Mechanism			16 Valve DOHC, Chain Drive	←
Combustion Chamber			Pentroof Type	←
Manifolds			Cross-Flow	←
Fuel System			SFI	←
Displacement cm^3 (cu. in.)			1497 (91.3)	←
Bore x Stroke mm (in.)			75.0 x 84.7 (2.95 x 3.33)	←
Compression Ratio			13.0 : 1	10.5 : 1
Max. Output [SAE-NET]			52 kW @ 4500 rpm 70 HP @ 4500 rpm	81 kW @ 6000 rpm 108 HP @ 6000 rpm
Max. Torque [SAE-NET]			111 N·m @ 4200 rpm 82 lb-ft @ 4200 rpm	142 N·m @ 4200 rpm 105 lb-ft @ 4200 rpm
Valve Timing	Intake	Open	18° ~ –25° BTDC	–7° ~ 53° BTDC
		Close	72° ~ 115° ABDC	52° ~ –8° ABDC
	Exhaust	Open	34° BBDC	42° BBDC
		Close	2° ATDC	←
Fuel Octane Number RON			91 or more	←
Oil Grade			API SJ EC or ILSAC	←

▶ Performance Curve ◀

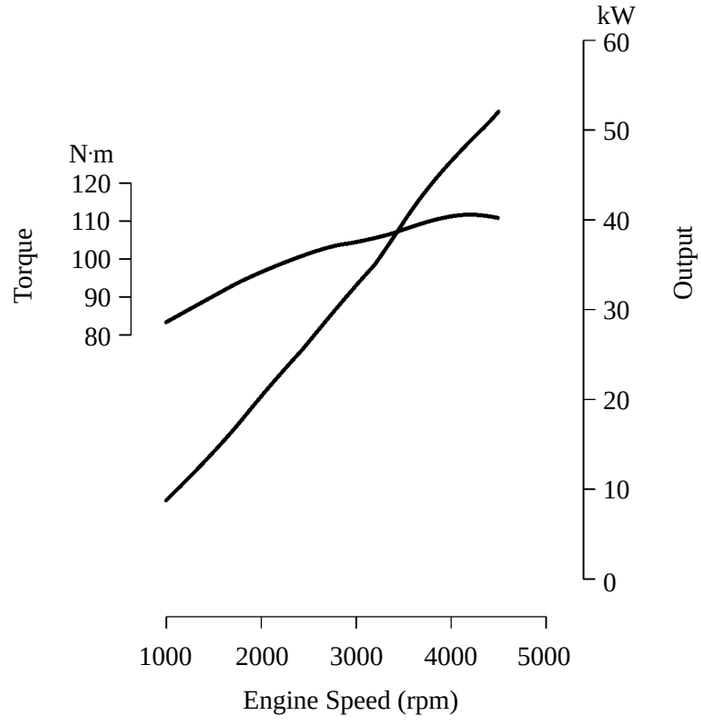

182EG03

■FEATURES OF 1NZ-FXE ENGINE

The 1NZ-FXE engine has been able to achieve the following performance through the adoption of the items listed below.

(1) High performance and fuel economy

(2) Low noise and vibration

(3) Lightweight and compact design

(4) Good serviceability

(5) Clean emission

Item	(1)	(2)	(3)	(4)	(5)	1NZ-FE
The VVT-i system is used.	○				○	○
High-expansion Atkinson cycle has been adopted.	○					
An offset crankshaft has been adopted.	○					○
A cylinder block made of aluminum has been adopted.		○	○			○
A stainless steel exhaust manifold is used for weight reduction.			○		○	○
A rearward exhaust layout has been adopted to realize the early activation of the catalyst.					○	○
HC Adsorber and catalyst system has been adopted.					○	
Fuel returnless system has been adopted.					○	○
12-hole type fuel injectors have been adopted.	○				○	○
The DIS (Direct Ignition System) makes ignition timing adjustment unnecessary.				○		○
Quick connectors are used to connect the fuel hose with the fuel pipes.				○		○
The oil filter is installed diagonally downward.				○		○
A timing chain has been adopted.				○		○
A vacuum system that detects leaks in the evaporative emission control system has been adopted.				○	○	○
The vapor reducing fuel tank system has been adopted. This system reduces the amount of fuel vapor that is generated.					○	

■ENGINE PROPER

1. Cylinder Head

- The angle of the intake and exhaust valves is narrowed and set at 33.5° to permit a compact cylinder head.
- As a result of installing the injector in the intake port of the cylinder head, the contact of the fuel against the intake port wall has been minimized and fuel economy has been improved.
- A water jacket has been provided between the exhaust port and the spark plug boss in order to maintain the combustion chamber wall temperature uniform, thus improving the cooling performance of the combustion chamber and the area around the spark plug.

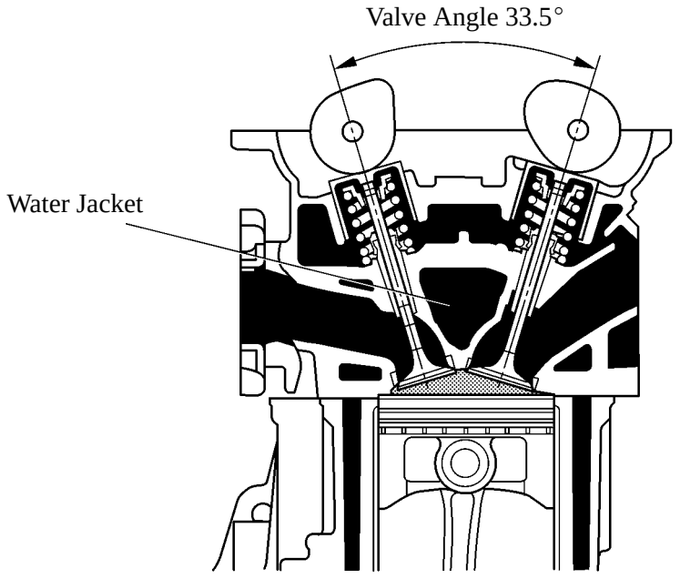

182EG04

2. Cylinder Block

- A cylinder block made of aluminum alloy has been adopted to realize a significant amount of weight reduction.
- A water pump swirl chamber and an inlet passage to the pump are provided in the cylinder block.
- The rear portion of the cylinder block has been shaped conically to improve the coupling rigidity with the transaxle.
- Through the adoption of the offset crankshaft, the bore center has been shifted 12 mm towards the intake, in relation to the crankshaft center. Thus, the side force when the maximum pressure is applied has been reduced and the heat efficiency has been improved. And as a result, fuel economy has been improved.
- Through the use of a thin-walled cast iron liner in the cylinder bore, a distance of 8 mm between the bores has been realized, resulting in a compact package. This liner is thin, so that boring is not possible.
- By discontinuing the use of the rear oil seal retainer and by pressing the rear oil seal into the cylinder block, a compact package has been realized.

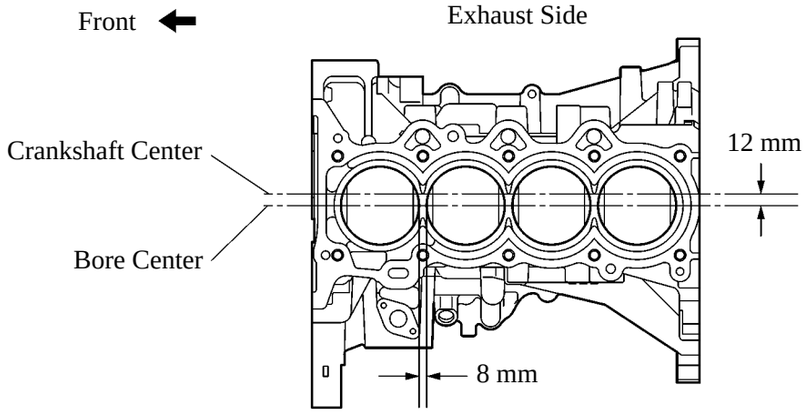

3. Piston

- The taper squish shaped piston has been adopted to improve combustion chamber.
- Low-tension piston rings have been adopted to reduce friction and improve fuel economy and oil consumption performance.
- By increasing the mechining precision of the cylinder bore diameter, the outer diameter of the piston has been made into the one type.

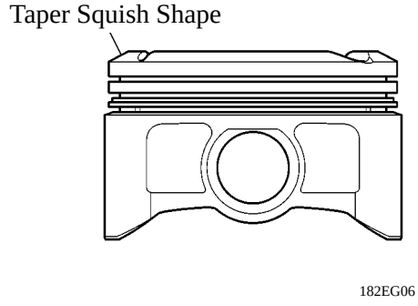

4. Connecting Rod

- The connecting rods are made of high-strength material for weight reduction.
- The connecting rod cap is held by bolts tightened to plastic region.

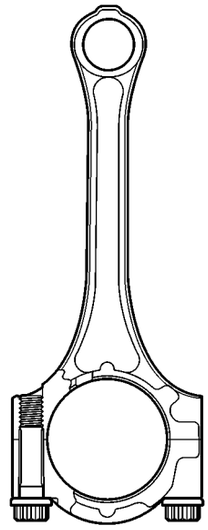

171EG07

5. Crankshaft

- The crankshaft has 5 journals and 4 balance weights.
- A crankshaft position sensor rotor has been pressed into the crankshaft to realize an integrated configuration.
- The surface roughness of the pins and journals have been improved for low-friction operation.
- The bearing width has been reduced for low-friction operation.

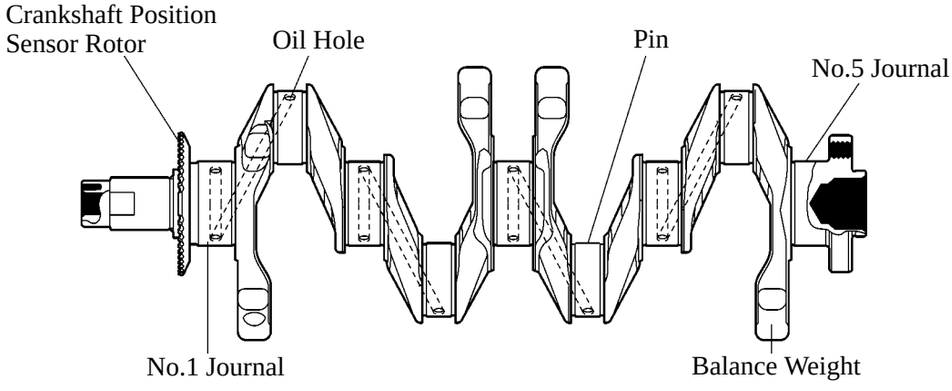

182EG07

■VALVE MECHANISM

1. General

- Each cylinder has 2 intake valves and 2 exhaust valves.
- The valves are directly opened and closed by 2 camshafts.
- The intake and exhaust camshafts are driven by a roller timing chain.
- The VVT-i system is used to improve fuel economy, engine performance and reduce exhaust emission.

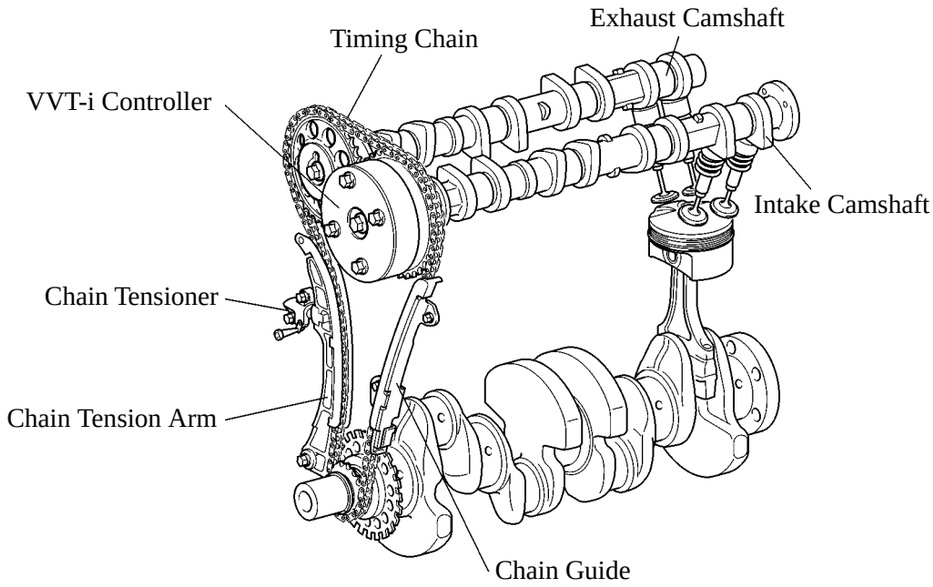

171EG09

2. Camshafts

- In conjunction with the adoption of the VVT-i system, an oil passage is provided in the intake camshaft in order to supply engine oil to the VVT-i system.
- A VVT-i controller has been installed on the front of the intake camshaft to vary the timing of the intake valves.
- The timing rotor is provided behind the intake camshaft to trigger the camshaft position sensor.

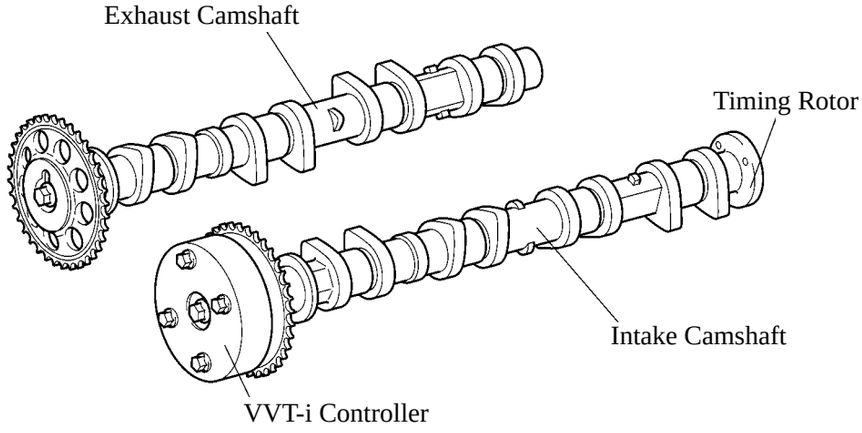

171EG10

3. Intake and Exhaust Valve and Valve Lifter

- Valve lifters with shimless valve adjustment have been adopted for weight reduction.
  The adjustment of the valve clearance is accomplished by selecting and replacing the appropriate valve lifters.
- Narrower valve stems have been adopted to reduce the intake and exhaust resistance and for weight reduction.

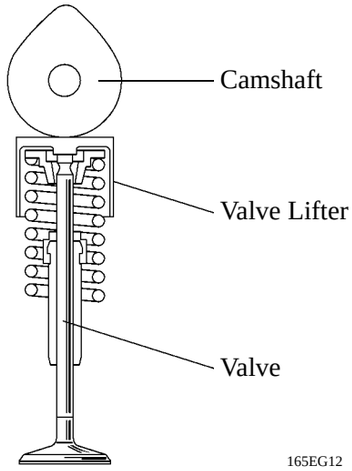

▶ Specifications ◀ mm (in.)

Item	Intake Valve	Exhaust Valve
Face Diameter	30.5 (1.2)	25.5 (1.0)
Stem Diameter	5.0 (0.20)	5.0 (0.20)

4. Timing Chain

- A roller timing chain with an 8.0 mm pitch has been adopted to make the engine more compact and reduce chain noise.
- A material which has excellent wear resistance has been selected for the timing chain to improve reliability.
- The timing chain is lubricated by engine oil from an oil jet.
- Chain tensioner, chain tension arm and chain guide are established to reduce the engine noise and friction loss.

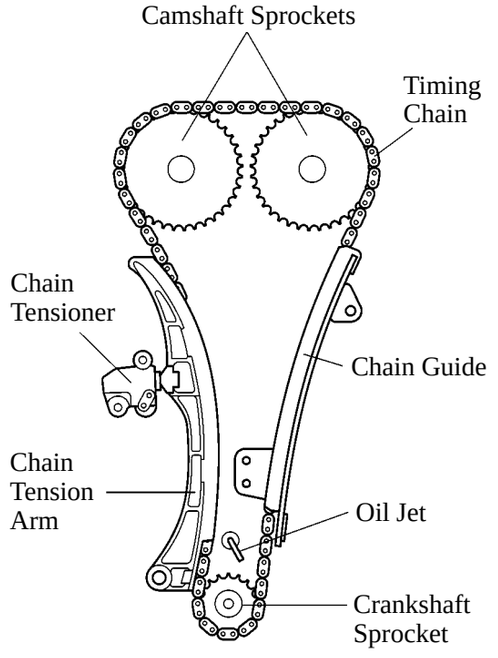

5. Chain Tensioner

- The chain tensioner uses a spring and oil pressure to maintain proper chain tension at all times.
  The chain tensioner suppresses noise generated by the chain.
- A ratchet type half-back mechanism is used.

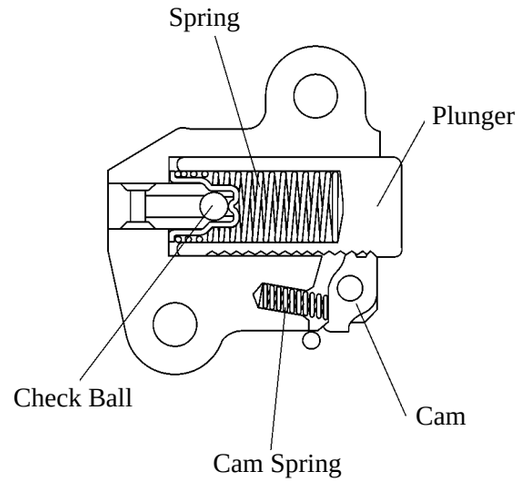

171EG13

6. Timing Chain Cover

- A single-piece, aluminum die-cast timing chain cover that entirely seals the front portion of the cylinder block and the cylinder head has been adopted.
- A service hole for the chain tensioner has been provided in the timing chain cover to improve serviceability.

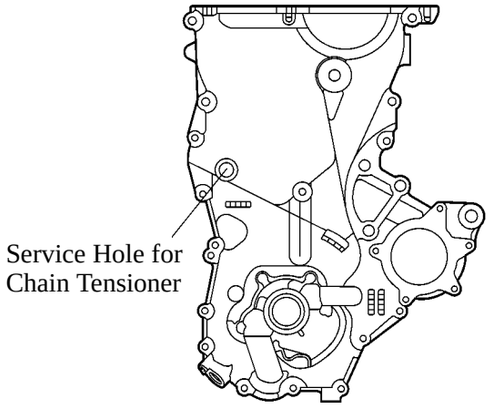

Front View

171EG31

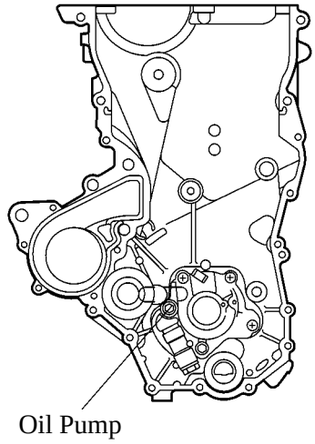

Back View

171EG32

■LUBRICATION SYSTEM

- The lubrication circuit is fully pressurized and all oil passes through an oil filter.
- A trochoid gear type oil pump, which is driven directly by the crankshaft, has been provided in the front of the cylinder block.
- The oil filter has been installed diagonally downward from the side of the cylinder block to improve serviceability.

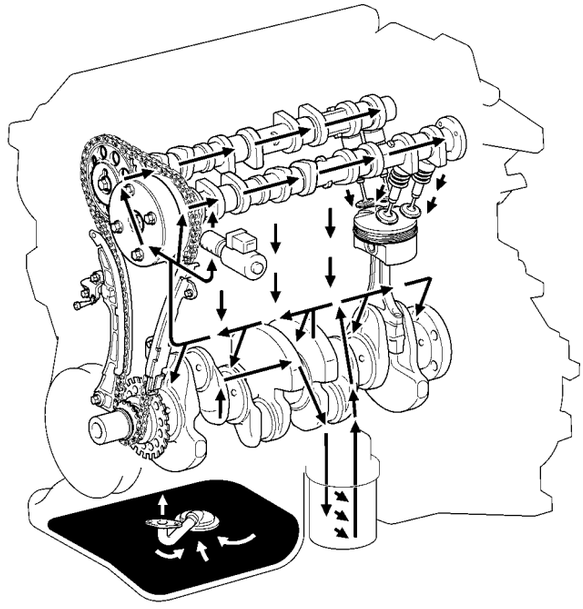

182EG08

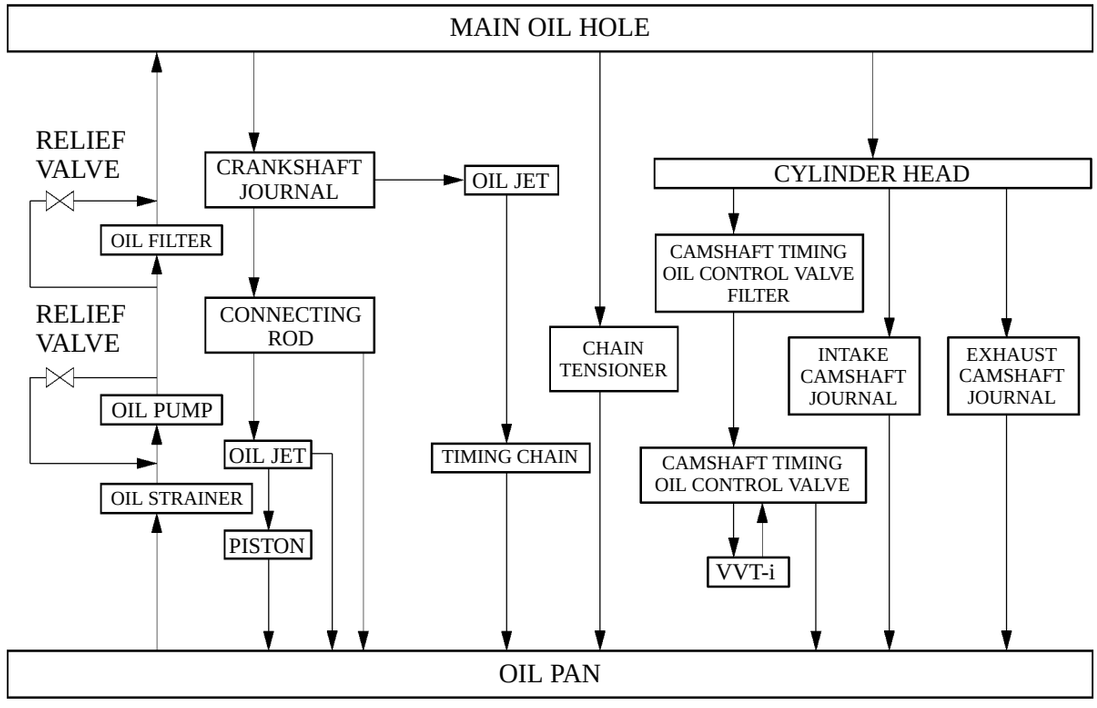

182EG09

■COOLING SYSTEM

1. General

- The cooling system is a pressurized, forced-circulation type.
- A thermostat with a bypass valve is located on the water inlet housing to maintain suitable temperature distribution in the cooling system.
- The flow of the engine coolant makes a U-turn in the cylinder block to ensure a smooth flow of the engine coolant.
- The radiator for the engine and the A/C condenser have been integrated to minimize the space they occupy in the engine compartment.

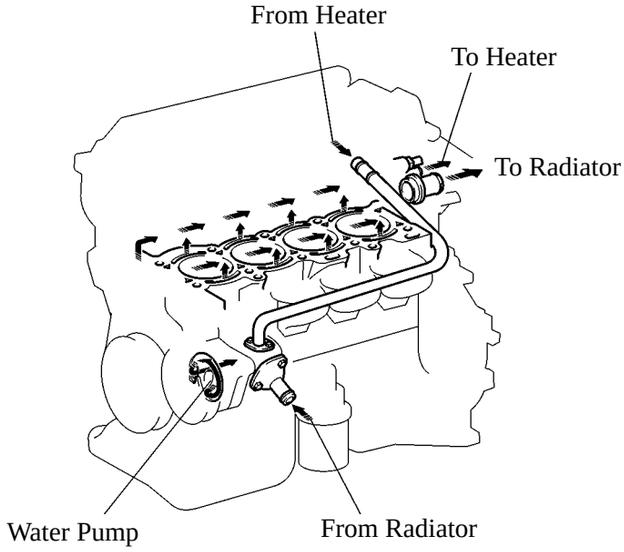

182EG10

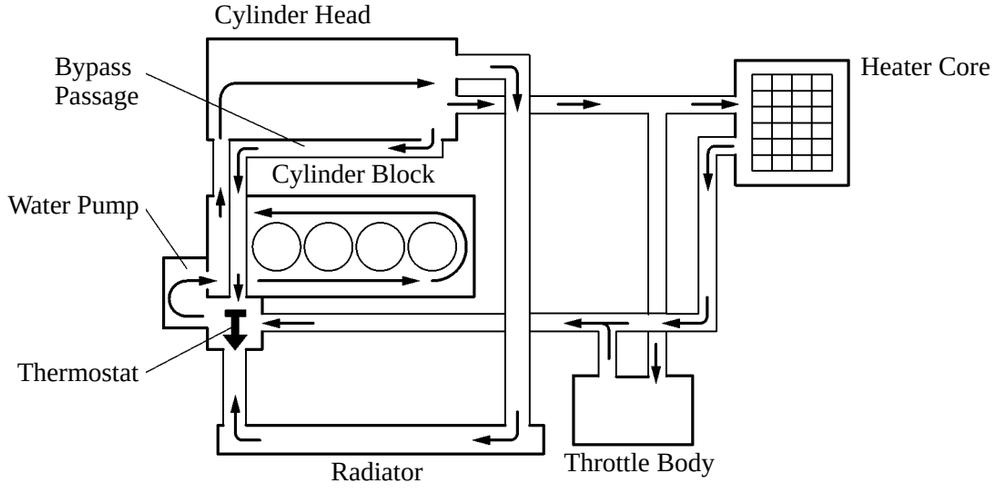

171EG17

2. Radiator

The radiator for the engine and the A/C condenser have been integrated to minimize the space they occupy in the engine compartment. Cutouts have been provided between the radiator and condenser sections to prevent the transfer of heat between the two sections.

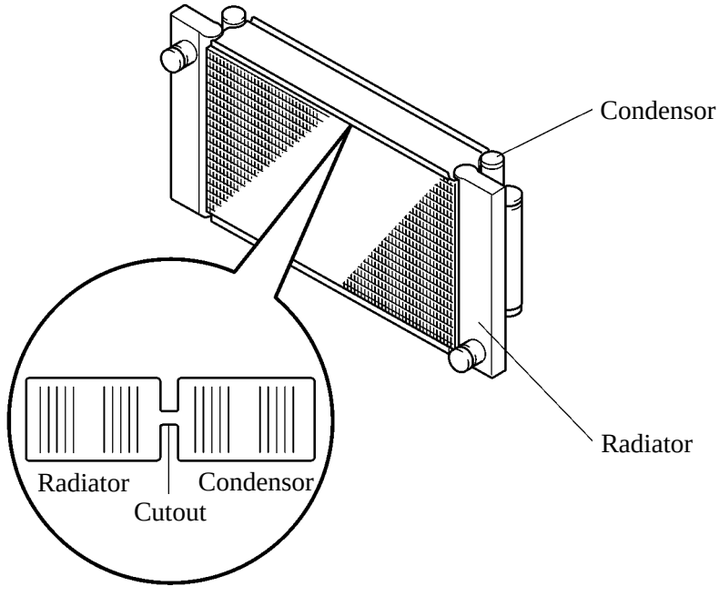

182EG11

■INTAKE AND EXHAUST SYSTEM

1. Throttle Body

- The adoption of the ETCS-i has realized excellent throttle control.
- The ISC system and cruise control system are controlled comprehensively by the ETCS-i.
- The ETCS-i, which drives the throttle valve through a DC motor that is controlled by the ECM, thus doing away with a throttle link to connect the accelerator pedal to the throttle valve, has been adopted.
- The throttle control motor is provided with a return spring that closes the throttle valve.
- An opener spring is provided on the throttle position sensor side. This spring opens the throttle valve slightly when the engine is stopped to prevent the throttle valve from sticking and to improve the engine's restartability.
- A warm coolant passage is provided below the throttle body to prevent the throttle valve from freezing during cold temperatures.

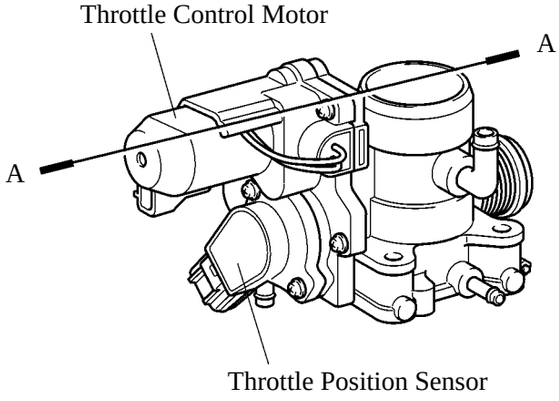

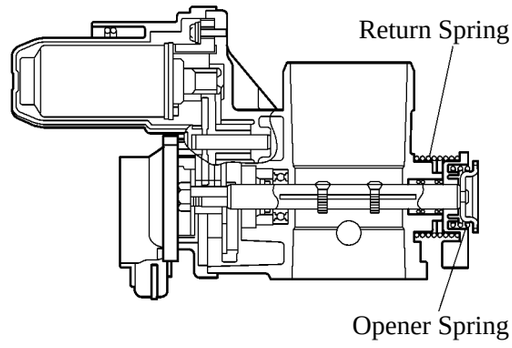

A – A Cross Section

182EG12

2. Intake Manifold

- Because it is not necessary to improve the intake air efficiency through inertial intake due to the adoption of the Atkinson cycle, the length of the intake pipe of the intake manifold has been shortened, and furthermore, the intake pipes for cylinders #1 and #2, as well as for #3 and #4, have been integrated midstream to achieve a large-scale weight reduction.
  In addition, the throttle body has been oriented downflow in the center of the surge tank to achieve a uniform intake air distribution.
- A vacuum port has been provided for the Toyota HC adsorber and catalyst system.

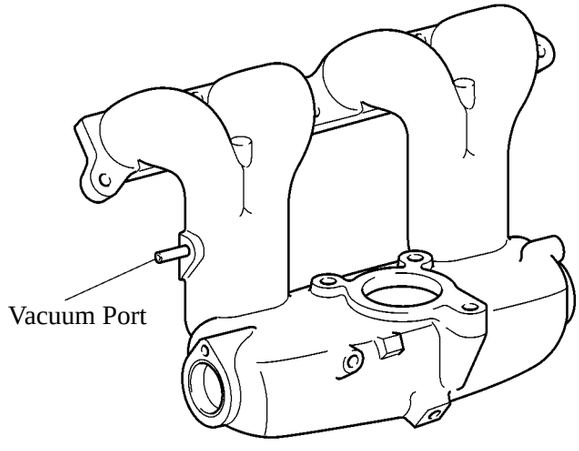

182EG13

3. Exhaust Manifold

- A ball joint has been adopted for coupling the exhaust manifold to the front pipe in order to improve reliability.
- A stainless steel exhaust manifold is used for weight reduction.

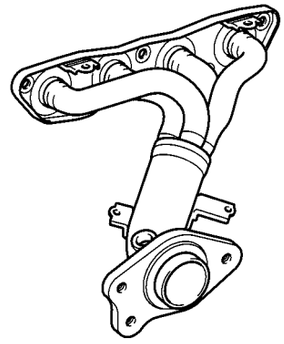

182EG14

4. Muffler

General

- A ball joint has been adopted for coupling the exhaust manifold to the exhaust pipe and the exhaust pipe to the main muffler to achieve a simple configuration and improved reliability.
- The ceramic walls in the front TWC (Three-Way Catalytic Converter) have been decreased in thickness and increased in density from the conventional models.
  By decreasing the thermal capacity in this manner, it becomes easier to heat the catalyst and the catalyst's exhaust cleansing performance is improved.
- A Toyota HCAC (HC Adsorber and Catalyst) system has been adopted to improve the clean emission performance of the exhaust gases when the temperature of the TWC is low.

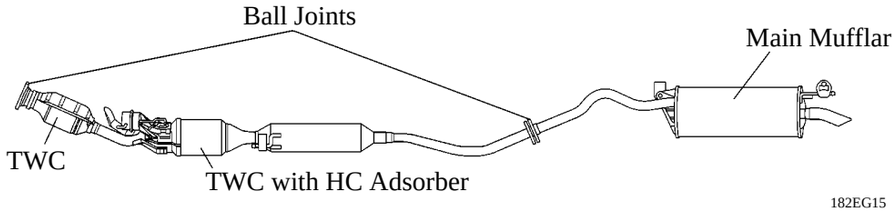

182EG15

Toyota HCAC System

a) General

This system provides HC adsorber coaxially to the TWC to improve the clean emission performance of the exhaust gases when the temperature of the TWC is low.

b) Construction

This system consists of HC adsorber, TWC, actuator, bypass valve.

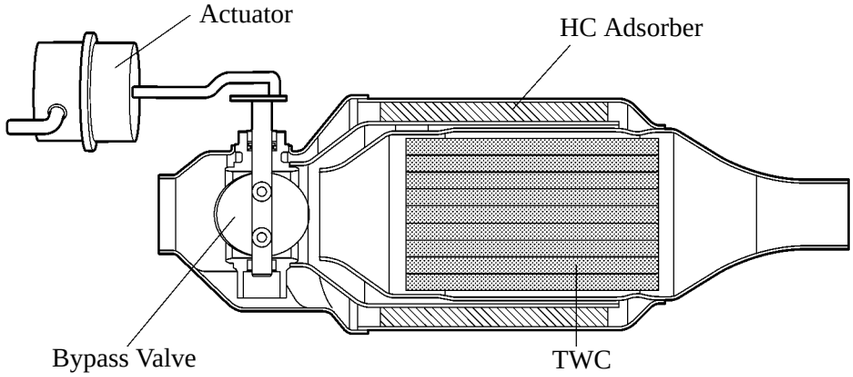

182EG16

c) Operation

Before the engine is started, the bypass valve remains open. When the engine is started, the ECM outputs a signal to the VSV (for HC adsorber and catalyst system), which is applying a vacuum to the actuator. As a result, the bypass valve closes.

Immediately after the engine has started, the exhaust gases pass through the HC adsorber in which HC adsorbed and stored for a certain time (until the temperature of the HC adsorber rises). And prevent the HC emitted from the tail pipe when the temperature of the TWCs are low.

After the TWC has warmed up, the VSV closes to the bypass valve to open. Then, as the temperature of the rear TWC rises, the temperature of the HC absorber that surrounds it also rises, and the HC starts to be desorbed, and cleaned by the TWC.
Furthermore, this system activates the VSV after the HC adsorber is warmed up and triggerd by deceleration condition, the bypass valve is closed in order to scavenge the HC that remains in the HC adsorber.

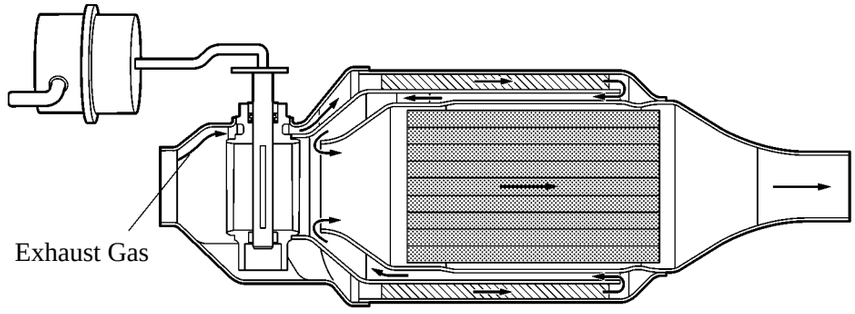

Cold Engine or Scavenging Mode

182EG17

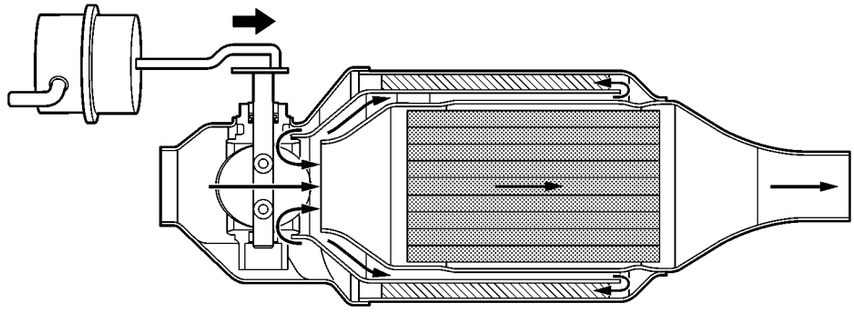

Warm Engine

182EG18

■FUEL SYSTEM

1. Injector

A compact 12-hole type injector has been adopted to improve the atomization of fuel.

2. Fuel Returnless System

This system is to reduce the evaporative emission. As shown below, integrating the pressure regulator and fuel filter with the fuel pump assembly made it possible to discontinue the return of fuel from the engine area and prevent temperature rise inside the fuel tank.

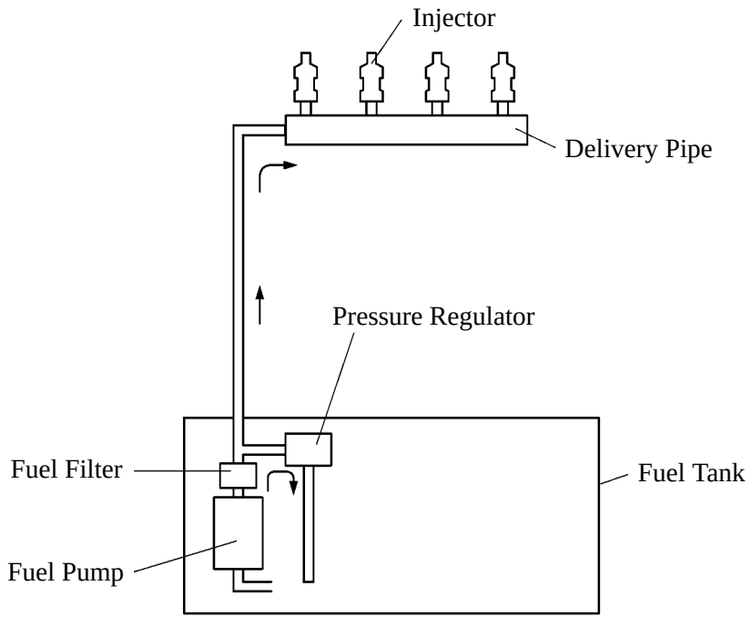

3. Quick Connector

Quick connector has been adopted to connect the fuel pipe with the fuel hose to improve serviceability.

4. ORVR System

The ORVR (On-Board Refueling Vapor Recovery) is a system that uses a charcoal canister, which is provided onboard, to recover the fuel vapor that is generated during refueling. This reduces the discharge of fuel vapor into the atmosphere.

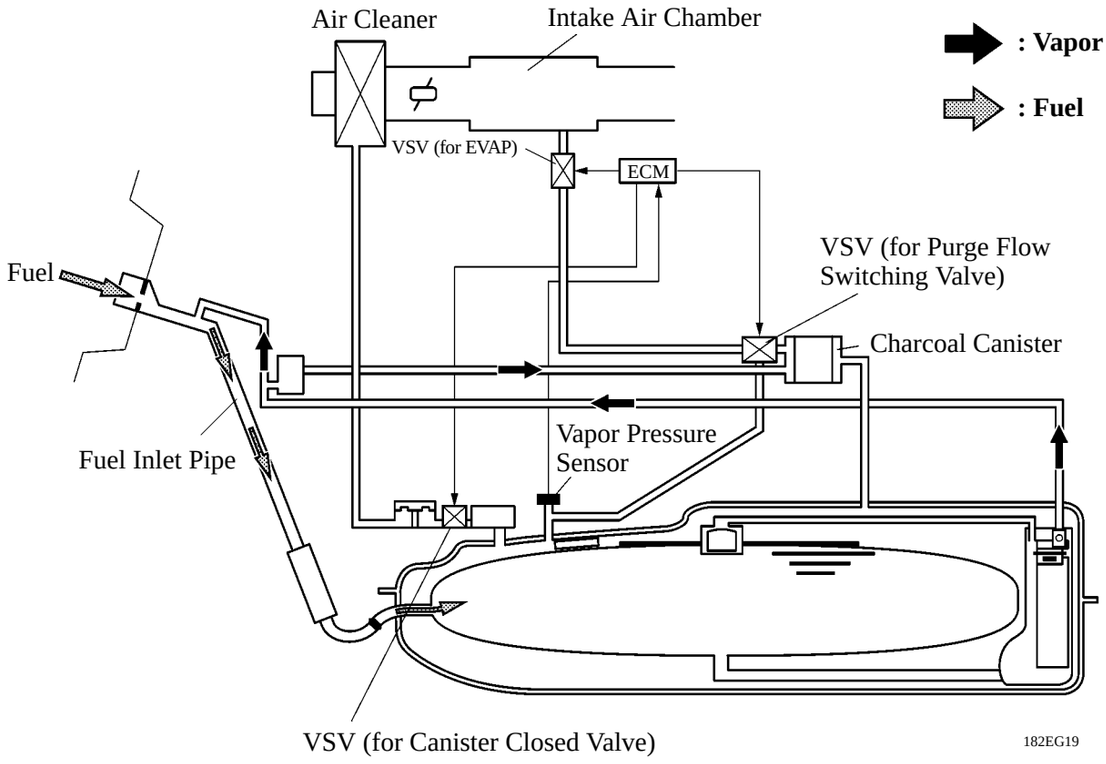

5. Fuel Tank

General

- To reduce the amount of fuel vapor generated when the vehicle is parked, during refueling, or while driving, a vapor reducing fuel tank system has been adopted.
  This system provides a vapor reducing fuel tank that expands or contracts in accordance with the volume of the fuel in the fuel storage area in the fuel tank. By thus reducing the space in which fuel can evaporate, the generation of fuel vapor is minimized.
- Along with the provision of the vapor reducing fuel tank whose size fluctuates in the fuel tank, the fuel gauge and the fuel pump have been provided in the sub tank. For this reason, a direct-acting fuel gauge has been adopted.

  NOTE: At low ambient temperatures, the capacity of the vapor reducing fuel tank is reduced as it is made of resin (When the outside temperature is at –10°C (14°F) the size of the tank will be reduced by approximate 5 liters).

▶ System Diagram ◀

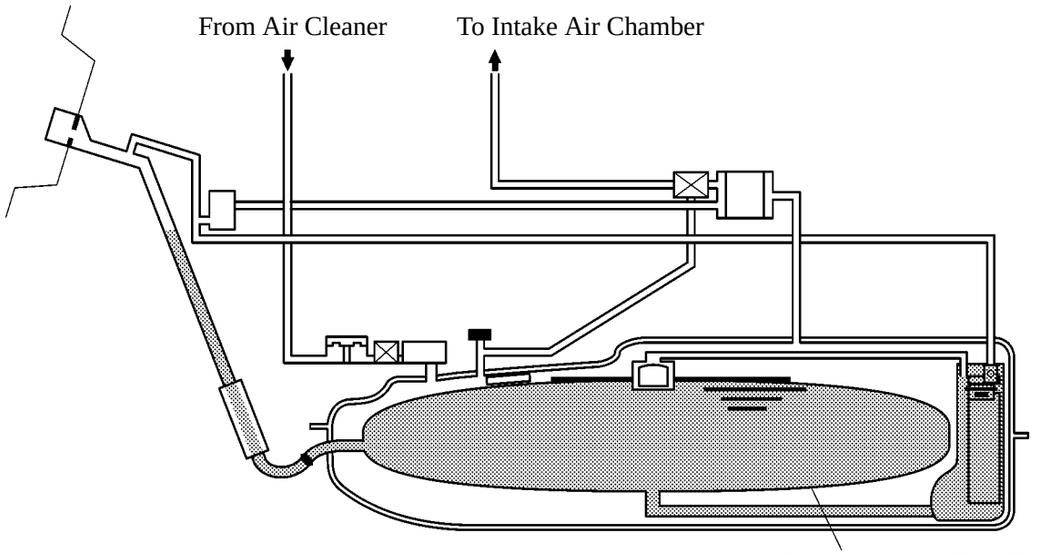

When the Tank is Full

182EG20

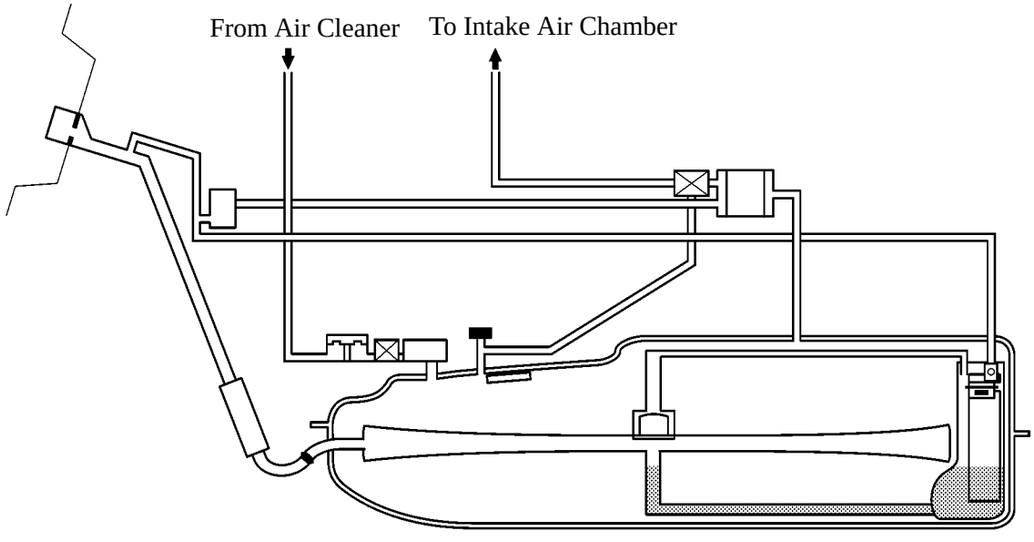

When the Tank is Empty

182EG21

Fuel Gauge

- A direct-acting fuel gauge has been provided in the sub tank.
- This gauge consists of a pipe that is surrounded by a coil, and a float in the pipe moves up and down with the fluctuation of the fuel level.
  A magnet is attached to the back side of the float. The up or down movement of the float causes a change in the magnetic field. The flow of current through the coil creates a potential difference, and the resultant voltage is transmitted to the meter ECU. For details, see page 146 (Meter Section).

■IGNITION SYSTEM

1. General

A DIS (Direct Ignition System) has been adopted. The DIS improves the ignition timing accuracy, reduces high-voltage loss, and enhances the overall reliability of the ignition system by eliminating the distributor. The DIS in 1NZ-FXE engine is an independent ignition system which has one ignition coil (with igniter) for each cylinder.

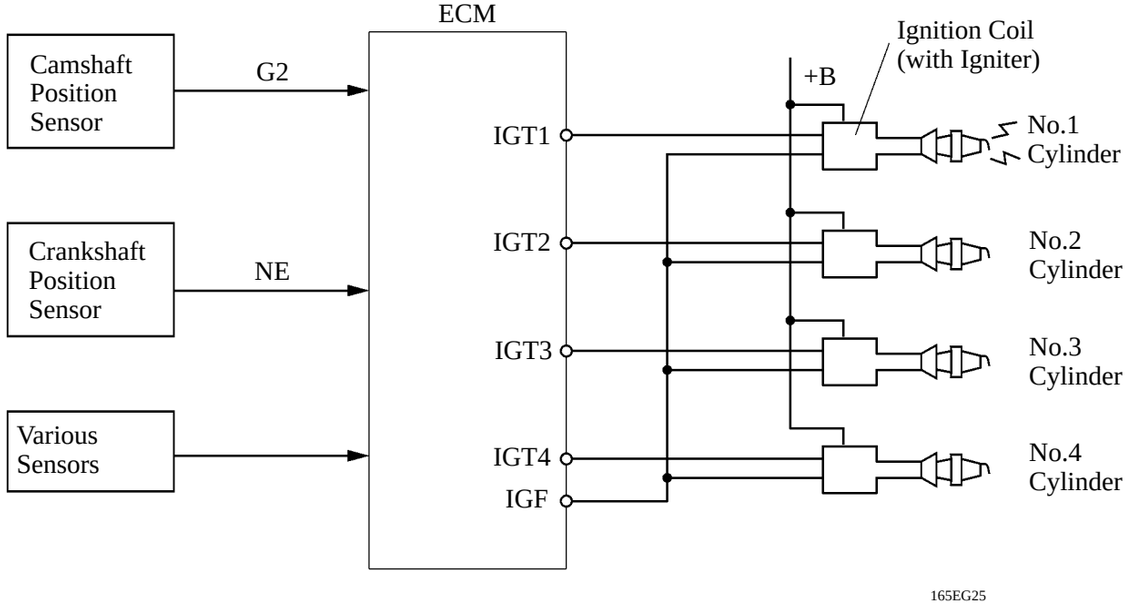

2. Ignition Coil

The DIS provides 4 ignition coils, one for each cylinder. The spark plug caps, which provide contact to the spark plugs, are integrated with an ignition coil. Also, an igniter is enclosed to simplify the system.

3. Spark Plug

Iridium-tipped spark plugs have been adopted to realize a 60,000-mile (100,000 km) maintenance-free operation. Their center electrode is made of iridium, which excels in wear resistance. As a result, the center electrode is made with a smaller diameter and improved the ignition performance.

■CHARGING AND STARTING SYSTEM

MG1 and MG2 (Motor Generator No.1 and 2) have been adopted in the charging system, and the conventional generator has been discontinued.
Furthermore, due to the adoption of MG1 for the starting system, the conventional starter has been discontinued.

■ENGINE CONTROL SYSTEM

1. General

The engine control system for the 1NZ-FXE engine has following system.

System	Outline
SFI (Sequential Multiport Fuel Injection)	An L-type SFI system directly detects the intake air volume with a hot-wire type mass air flow meter.
ESA (Electronic Spark Advance)	Ignition timing is determined by the ECM based on signals from various sensors. The ECM corrects ignition timing in response to engine knocking.
VVT-i (Variable Valve Timing-intelligent)	Controls the intake camshaft to an optimal valve timing in accordance with the engine condition.
ETCS-i (Electronic Throttle Control System-intelligent)	Optimally controls the throttle valve opening in accordance with the ECM, and the conditions of the engine and the vehicle, and comprehensively controls the ISC and cruise control system.
Fuel Pump Control	● Fuel pump operation is controlled by signal from the ECM. ● To stop the fuel pump during operation of the SRS airbag.
Oxygen Sensor Heater Control	Maintains the temperature of the oxygen sensors at an appropriate level to increase accuracy of detection of the oxygen concentration in the exhaust gas.
Evaporative Emission Control	● The ECM controls the purge flow of evaporative emissions (HC) in the charcoal canister in accordance with engine conditions. ● Using 3 VSVs and a vapor pressure sensor, the ECM detects any evaporative emission leakage occurring between the fuel tank and the charcoal canister, and vapor reducing fuel tank through the changes in the tank pressure. For details, see page 79.
Toyota HCAC System	The ECM controls the VSV (for Toyota HCAC System) to improve the clean emission performance of the exhaust gas when the temperature of the TWC is low. For details, see page 58.
Air Conditioning Cut-Off Control	By turning the air conditioning compressor OFF in accordance with the engine condition, drivability is maintained.
Cooling Fan Control	Radiator cooling fan operation is controlled by signals from ECM based on the engine coolant temperature sensor signal (THW).
HV Immobiliser	Prohibits fuel delivery, ignition, and starting the HV system if an attempt is made to start the HV system with an invalid ignition key. For details, see page 80.
Diagnosis	When the ECM detects a malfunction, the ECM diagnoses and memorizes the failed section.
Fail-Safe	When the ECM detects a malfunction, the ECM stops or controls the engine according to the data already stored in memory.

2. Construction

The configuration of the engine control system in the INZ-FXE engine is shown in the following chart.

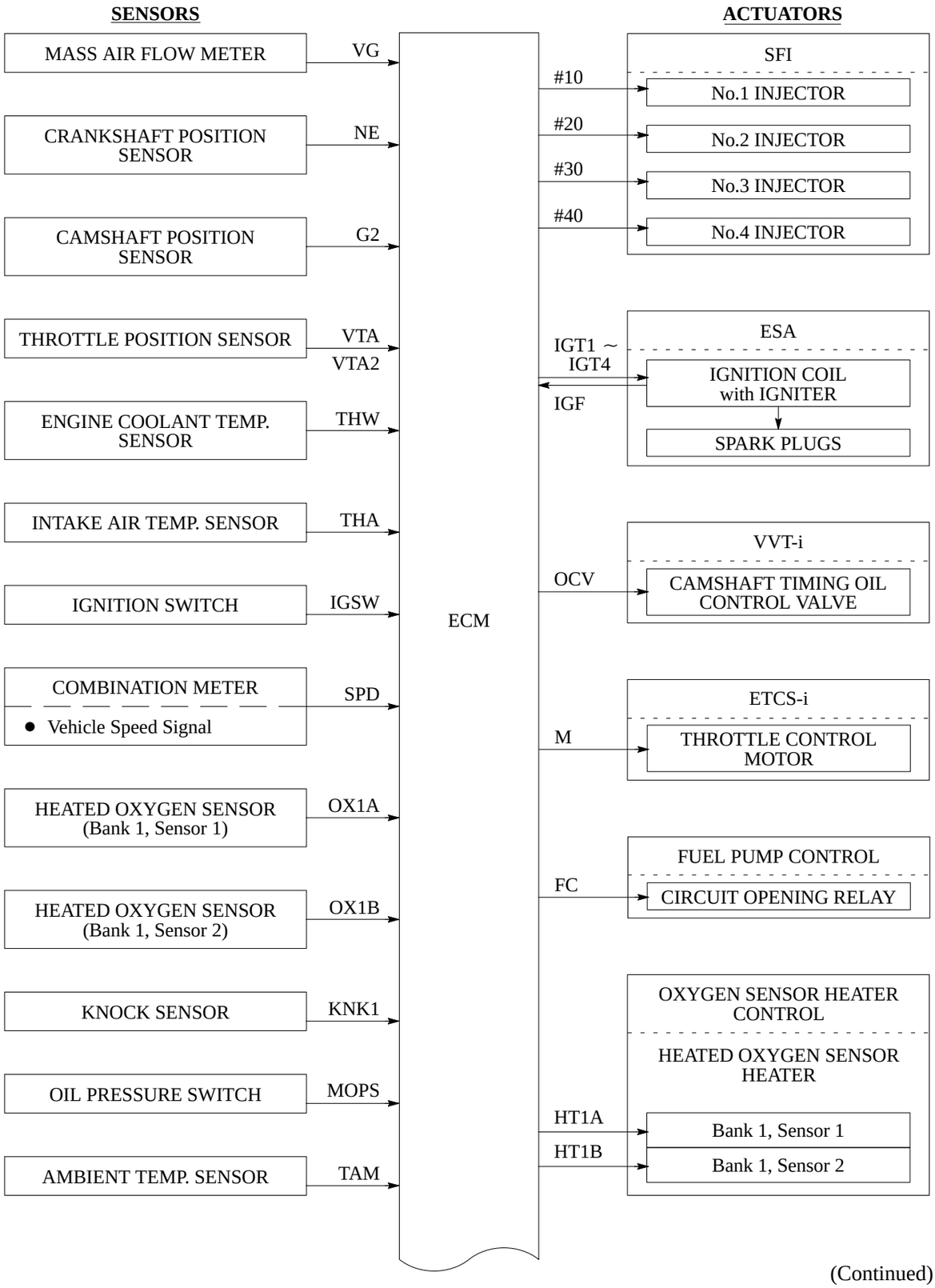

(Continued)

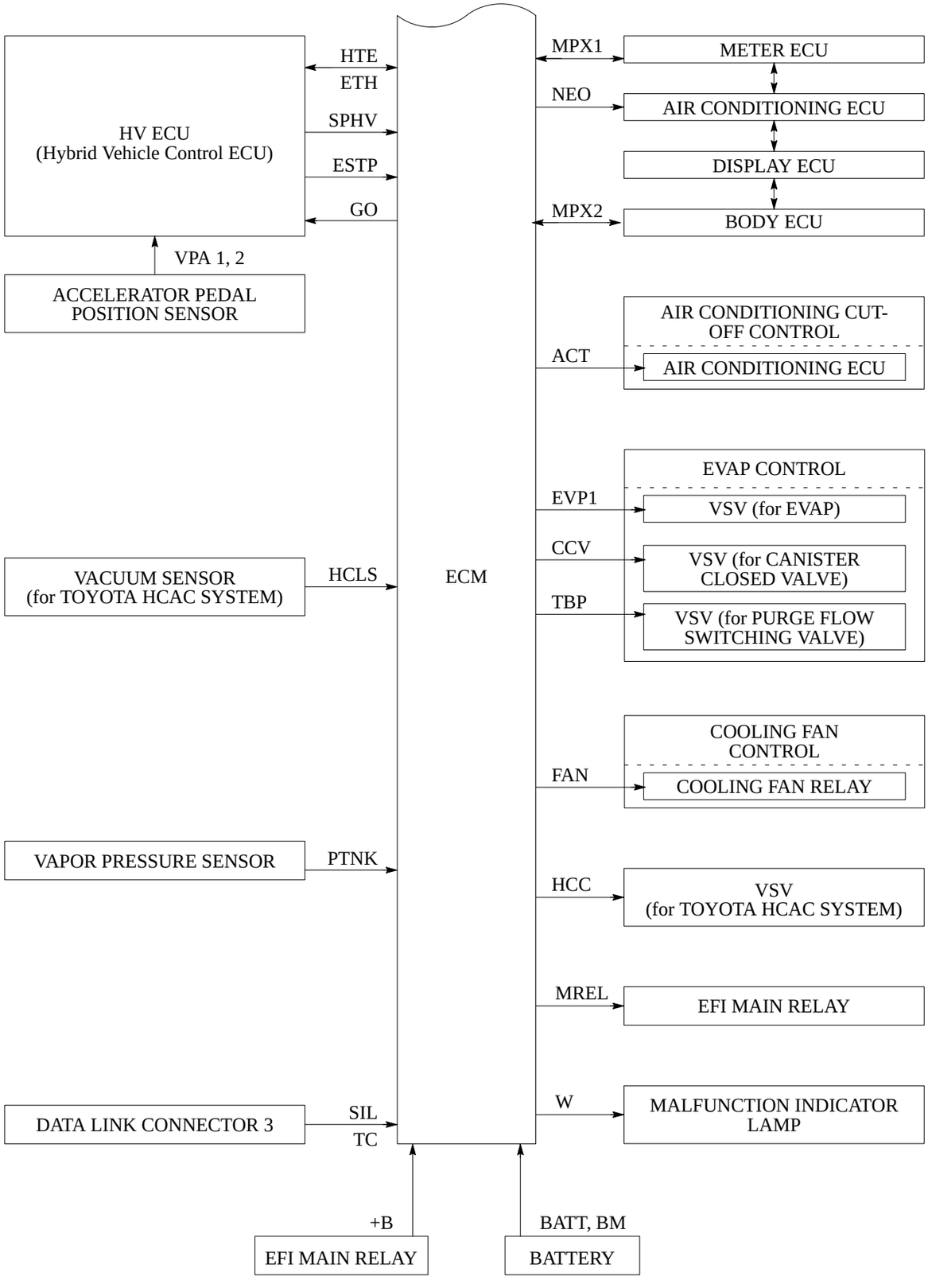
HV ECU
(Hybrid Vehicle Control ECU)
HTE
ETH
SPHV
ESTP
GO
VPA 1, 2
ACCELERATOR PEDAL POSITION SENSOR
VACUUM SENSOR (for TOYOTA HCAC SYSTEM)
HCLS
VAPOR PRESSURE SENSOR
PTNK
DATA LINK CONNECTOR 3
SIL
TC
+B
EFI MAIN RELAY
BATT, BM
BATTERY
ECM
MPX1
METER ECU
NEO
AIR CONDITIONING ECU
DISPLAY ECU
MPX2
BODY ECU
AIR CONDITIONING CUT-OFF CONTROL
ACT
AIR CONDITIONING ECU
EVAP CONTROL
EVP1
VSV (for EVAP)
CCV
VSV (for CANISTER CLOSED VALVE)
TBP
VSV (for PURGE FLOW SWITCHING VALVE)
COOLING FAN CONTROL
FAN
COOLING FAN RELAY
HCC
VSV (for TOYOTA HCAC SYSTEM)
MREL
EFI MAIN RELAY
W
MALFUNCTION INDICATOR LAMP

3. Engine Control System Diagram

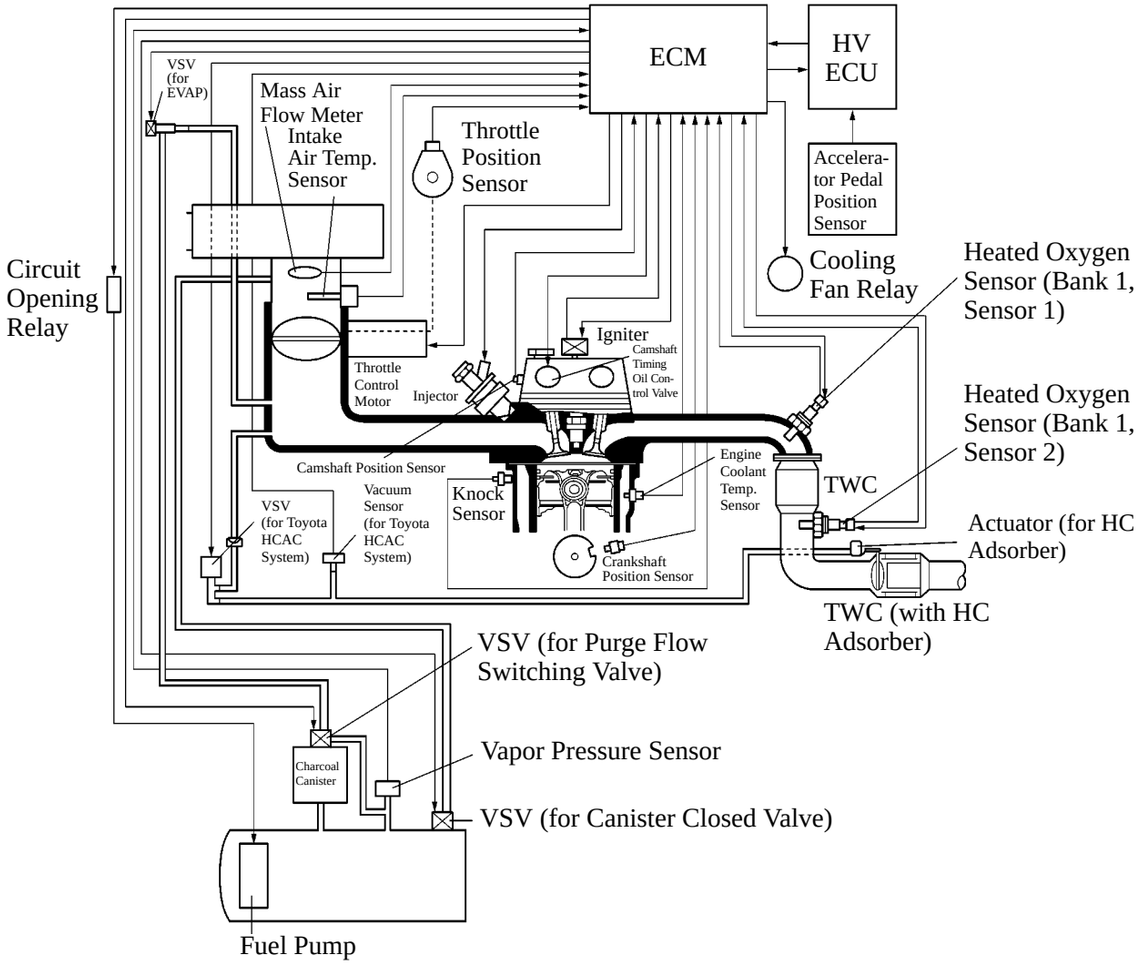

4. Layout of Components

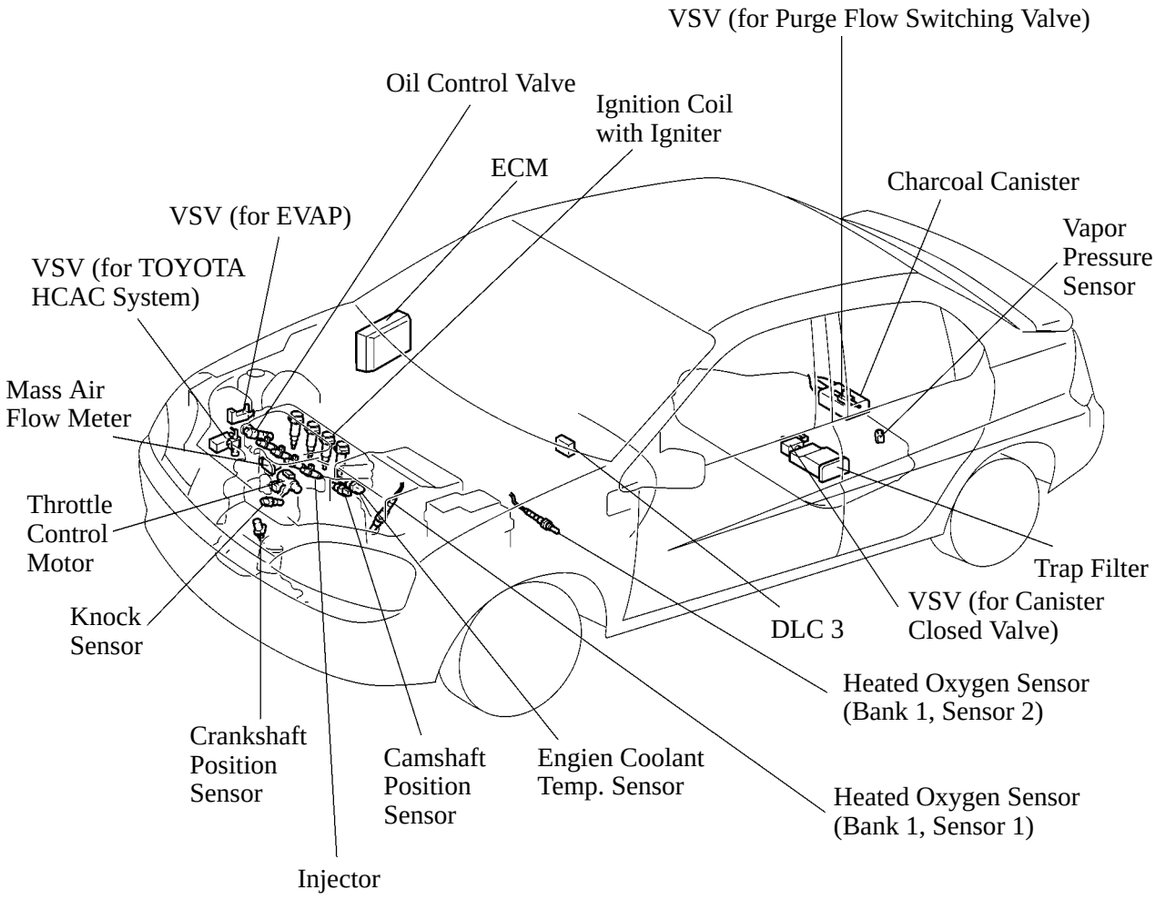

5. Main Components of Engine Control System

The main components of the 1NZ-FXE engine control system are as follows:

Components	Outline	Quantity
Mass Air Flow Meter	Hot-Wire Type	1
Crankshaft Position Sensor (Rotor's Teeth)	Pick-Up Coil Type (36-2)	1
Camshaft Position Sensor (Rotor's Teeth)	Pick-Up Coil Type (3)	1
Throttle Position Sensor	Linear Type (Double)	1
Knock Sensor	Built-In Piezoelectric Element Type	1
Oxygen Sensor	Heated Oxygen Sensor (Bank 1, Sensor 1) (Bank 1, Sensor 2)	2
Injector	12-Hole Type	4

6. VVT-i (Variable Valve Timing-intelligent) System

General

The VVT-i system is designed to control the intake camshaft within a wide range of 43° (of crankshaft angle) to provide a valve timing that is optimally suited to the engine condition, thus realizing improved torque in all the speed ranges and fuel economy, and reduce exhaust emissions.

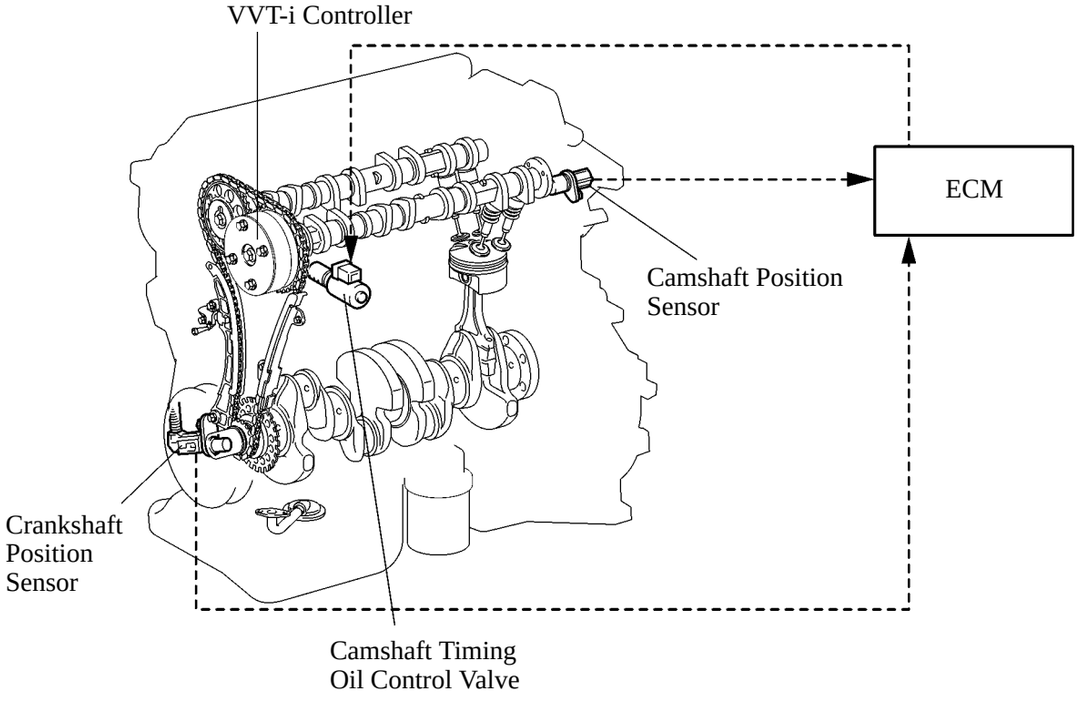

Construction

1) VVT-i Controller

This controller consists of the housing driven from the timing chain and the vane coupled with the intake camshaft.
The oil pressure sent from the advance or retard side path at the intake camshaft causes rotation in the VVT-i controller vane circumferential direction to vary the intake valve timing continuously.

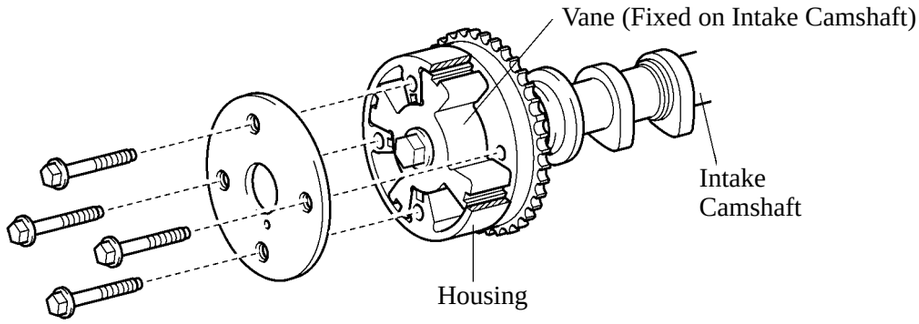

182EG40

2) Camshaft Timing Oil Control Valve

The camshaft timing oil control valve controls the spool valve position in accordance with the duty control from the ECM thus allocating the hydraulic pressure that is applied to the VVT-i controller to the advance and the retard side. When the engine is stopped, the camshaft timing oil control valve is in the most retarded state.

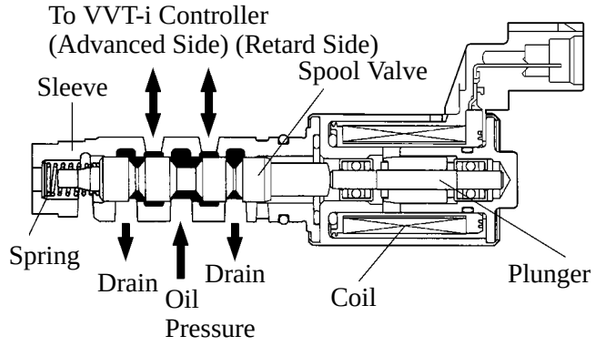

165EG34

Operation

The camshaft timing oil control valve selects the path to the VVT-i controller according to the advance, retard or hold signal from the ECM. The VVT-i controller rotates the intake camshaft in the timing advance or retard position or holds it according to the position where the oil pressure is applied.

1) Advance

When the camshaft timing oil control valve is positioned as illustrated below by the advance signal from the ECM, the resultant oil pressure is applied to the timing advance side vane chamber to rotate the camshaft in the timing advance direction.

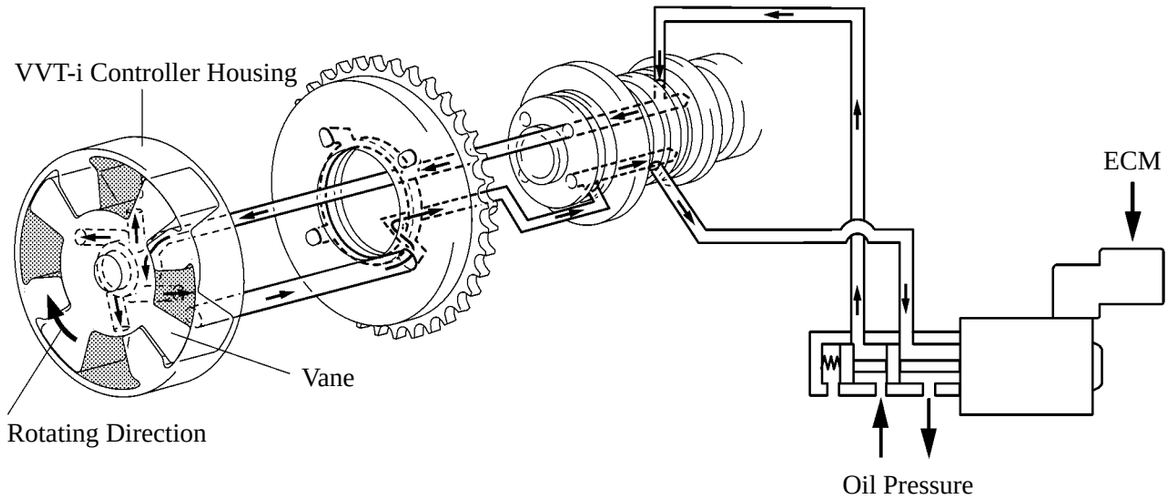

185EG18

2) Retard

When the camshaft timing oil control valve is positioned as illustrated below by the retard signal from the ECM, the resultant oil pressure is applied to the timing retard side vane chamber to rotate the camshaft in the timing retard direction.

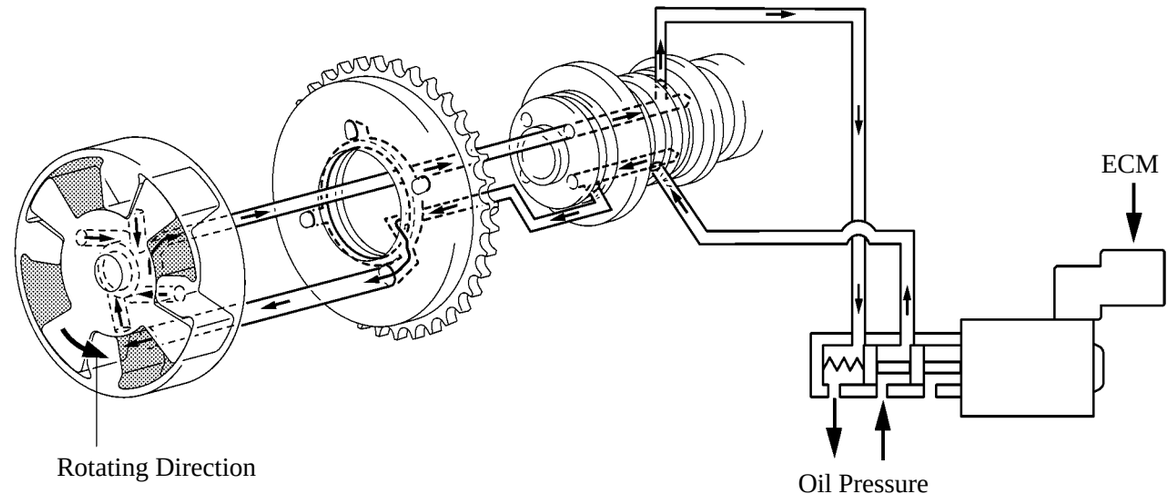

185EG19

3) Hold

The ECM calculates the target timing angle according to the traveling state to perform control as described in the previous page. After setting at the target timing, the valve timing is held by keeping the camshaft timing oil control valve in the neutral position unless the traveling state changes.
This adjusts the valve timing at the desired target position and prevents the engine oil from running out when it is unnecessary.

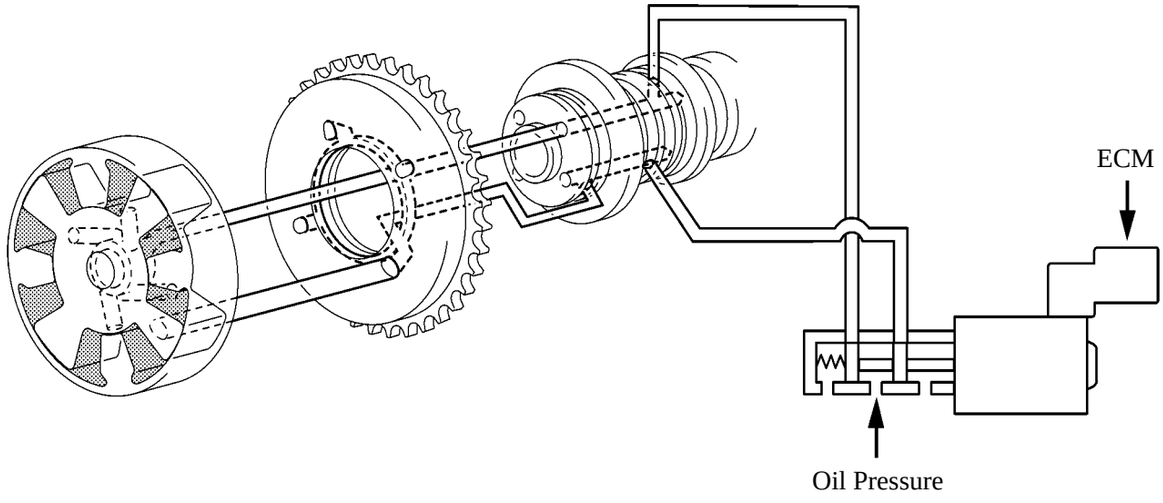

In proportion to the engine speed, intake air volume, throttle position and water temperature, the ECM calculates an optimal valve timing under each driving condition and control the camshaft timing oil control valve. In addition, ECM uses signal from the camshaft position sensor and the crankshaft position sensor to detect the actual valve timing, thus performing feedback control to achieve the target valve timing.

▶ Operation During Various Driving Condition (Conceptual Diagram) ◀

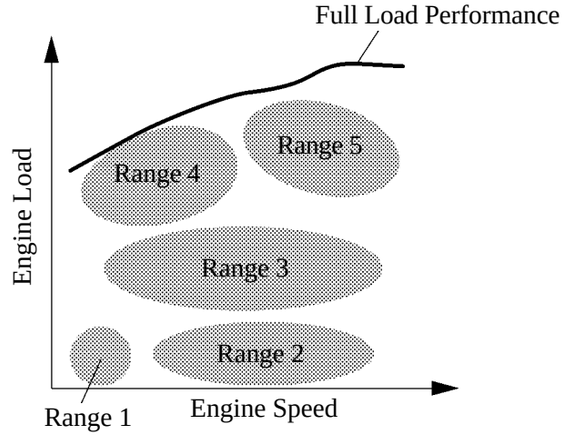

Operation State	Range	Valve Timing	Objective	Effect
During Idling	1	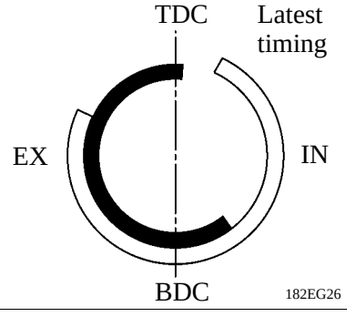	Eliminating overlap to reduce blow back to the intake side	Stabilized idling rpm Better fuel economy
At Light Load	2	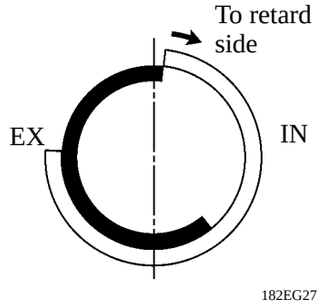	Decreasing overlap to eliminate blow back to the intake side	Ensured engine stability
At Medium load	3	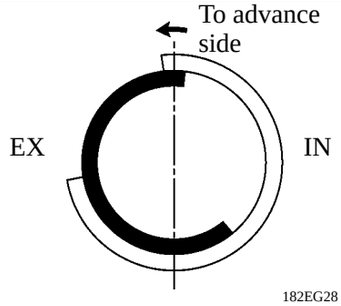	Increasing overlap to increase internal EGR for pumping loss elimination	Better fuel economy Improved emission control

Operation State	Range	Valve Timing	Objective	Effect
In Low to Medium Speed Range with Heavy Load	4	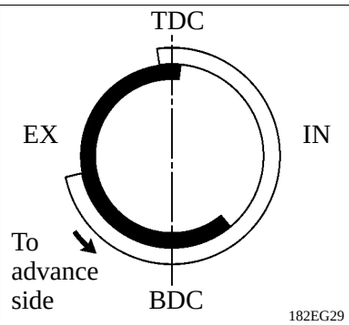	Advancing the intake valve close timing for volumetric efficiency improvement	Improved torque in low to medium speed range
In High Speed Range with Heavy Load	5	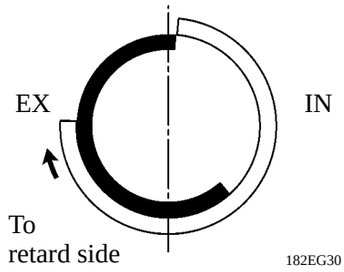	Retarding the intake valve close timing for volumetric efficiency improvement	Improved output
At Low Temperatures	—	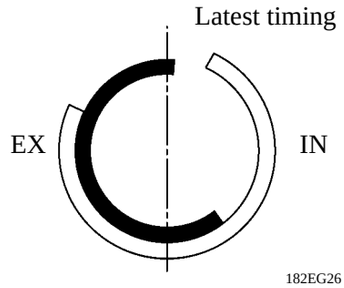	Eliminating overlap to prevent blow back to the intake side for reduction of fuel increase at low temperatures, and stabilizing the idling rpm for decreasing fast idle rotation	Stabilized fast idle rpm Better fuel economy
Upon Starting/ Stopping the Engine	—	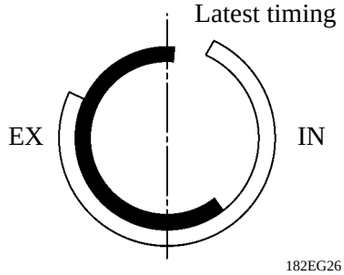	Eliminating overlap to eliminate blow back to the intake side	Improved startability

7. Fuel Pump Control

A fuel cut control is adopted to stop the fuel pump when the SRS airbag is deployed, thus helping reduce fuel leakage.
In this system, the airbag deployment signal from the airbag sensor assembly is detected by the HV ECU, send the signal to ECM, which turns OFF the circuit opening relay.
After the fuel cut control has been activated, turning the ignition switch from OFF to ON cancels the fuel cut control, thus engine can be restarted.

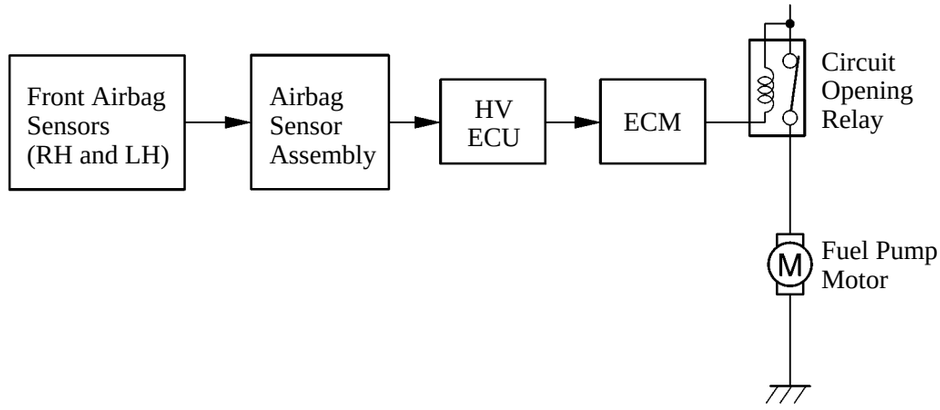

182EG39

8. ETCS-i (Electronic Throttle Control System-intelligent)

General

- The ETCS-i, which realizes excellent throttle control in all the operating ranges, has been adopted.
- In the conventional throttle body, the throttle valve opening is determined invariably by the amount of the accelerator pedal effort. In contrast, the ETCS-i used the ECM to calculate the optimal throttle valve opening that is appropriate for the respective driving condition and uses a throttle control motor to control the opening.
- The ETCS-i controls the ISC (Idle Speed Control) system and the cruise control system.

▶ System Diagram ◀

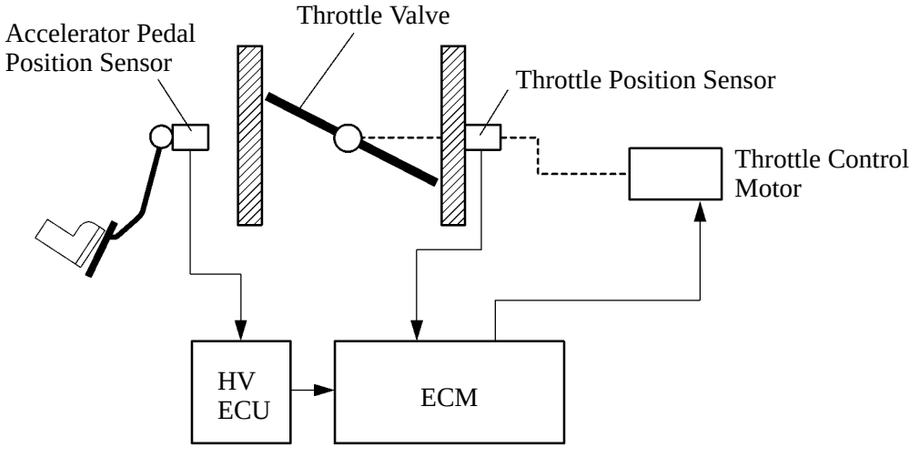

182EG31

Construction

1) Accelerator Pedal Position Sensor

The accelerator pedal position sensor is mounted on the accelerator pedal. To detect the pedal opening angle, 2 separate systems consisting of main and sub sensors are used, and 2 separate return springs are used to improve reliability. In the detecting portions, Hall elements have been adopted. Due to the characteristics of the Hall elements, different signals are output depending on whether the pedal is pressed all the way or is released. To correct these signals, a mechanical device has been provided to detect the correct pedal opening angle. The sensors of the 2 systems output the same signals.

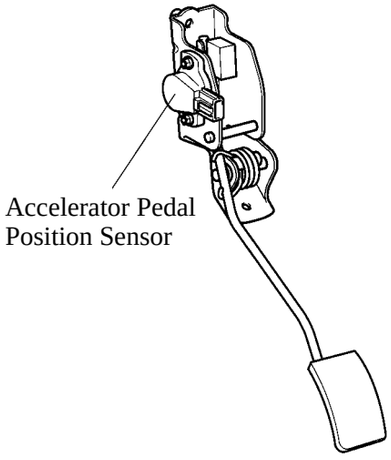

182EG32

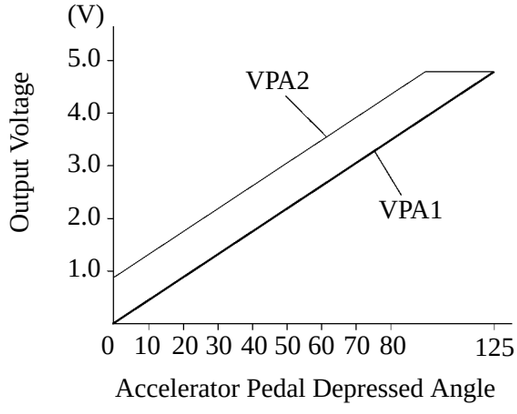

182EG33

2) Throttle Position Sensor

The throttle position sensor is mounted on the throttle body.
The throttle position sensor converts the amount of accelerator pedal effort into two types of electrical signals with distinct output characteristics. The signals are then input into the ECM.

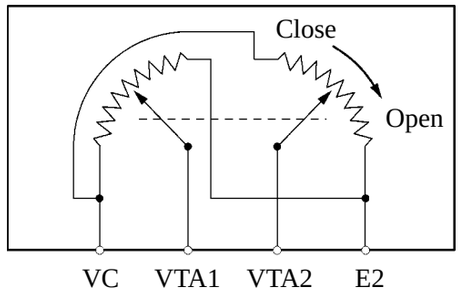

150EG40

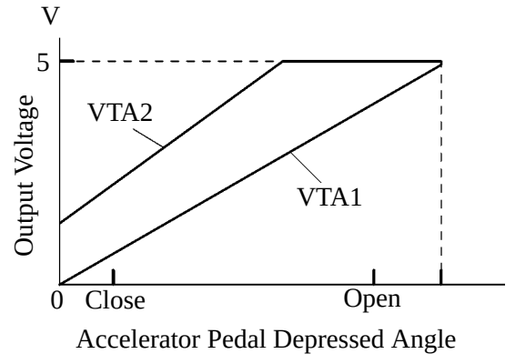

150EG39

3) Throttle Control Motor

A DC motor with excellent response and minimal power consumption is used for the throttle control motor. The ECM performs the duty ratio control of the direction and the amperage of the current that flows to the throttle control motor in order to regulate the opening angle of the throttle valve.

Operation

The ECM drives the throttle control motor by determining the target throttle valve opening in accordance with the respective operating condition.

1) Idle Speed Control

The idle speed control is effected entirely by the ETCS-i. The following are the contents of the control: idle-up control during cold engine operation, intake air volume control to improve the startability of the engine, and control for when the electrical load changes such as when the air conditioning switch is turned ON or OFF.

2) Cruise Control

Through the adoption of the ETCS-i, the vehicle speed is now controlled by the throttle control motor, which controls the throttle valve.

Fail Safe

If an abnormal condition occurs with the ETCS-i, the check engine warning light in the combination meter illuminates to alert the driver. The current to the throttle control motor is cut off to prevent the ETCS-i from operating. This enables the return spring to close the throttle valve.

Diagnosis

If the diagnostic trouble code 89 is being output to the combination meter check engine warning light, it means that the ECM has detected a malfunction in the ETCS-i, and outputs the diagnostic trouble code of the ETCS-i.
Also, the diagnostic trouble code can be output to a hand-held tester via the data link connector 3.
For details, refer to the 2001 Prius Repair Manual (Pub. No.RM778U).

9. Evaporative Emission Control

General

A vacuum system has been newly adopted to detect leaks in the evaporative emission control system. This vacuum system detects leaks by forcefully introducing the purge vacuum into the entire system and monitoring the changes in the pressure.
In order to detect evaporative emission leaks from the vapor reducing fuel tank, a density method has been adopted. This system uses an oxygen sensor to measure the HC density in the exhaust gases in order to detect leaks.
It consists of the following main conponents:

- A VSV (for canister closed valve) has been provided between the fresh air line and the fuel tank.
- The VSV (for purge flow switching valve) switches the passages from the charcoal canister to the purge line and from the fuel tank to the purge line.
- A vapor pressure sensor has been provided in the fuel tank in order to further ensure the precision of the vapor pressure sensor.
- DTCs (Diagnostic Trouble Codes) have been added. For details on the DTCs (Diagnostic Trouble Codes), refer to the 2001 Prius Repair Manual (Pub. No.RM778U).

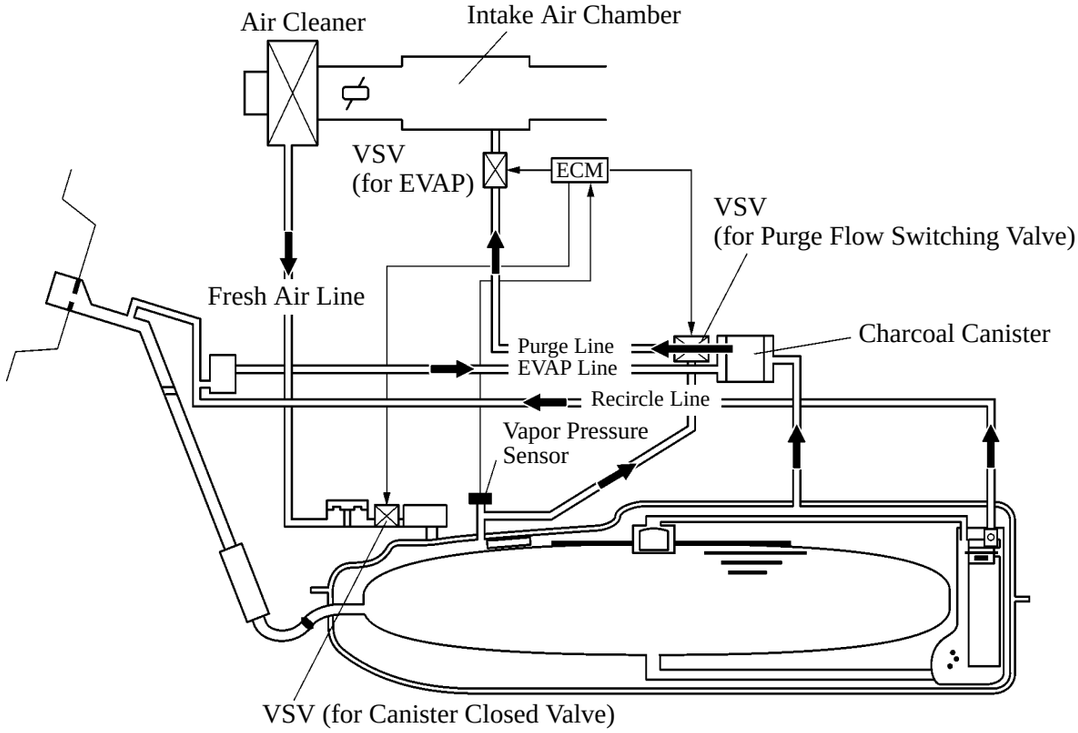

Operation

Initially, the VSV (for canister closed valve) is closed, and the VSV (for EVAP) is open, enabling the VSV (for purge flow switching valve) to keep the passage between the charcoal canister and the purge line open. This causes a vacuum to be applied to the purge line, evaporator line, recirculation line, and the line from the charcoal canister to the fuel tank.
Next, the VSV (for EVAP) is closed in order to maintain a vacuum from the VSV (for EVAP) to the inside of the fuel tank. Then, any subsequent changes in the pressure are monitored by the vapor pressure sensor in order to check for evaporative emission leaks.
Next, the VSV (for canister closed valve) and the VSV (for EVAP) open, enabling the VSV (for purge flow switching valve) to keep the passage between the fuel tank and the purge line open. Then, the air in the fuel tank is drawn in by the vacuum of the intake chamber, and the density of HC in the exhaust gases is measured by the oxygen sensor to detect any leaks.
If a leak is detected, the malfunction indicator lamp (MIL) illuminates to inform the driver. Also, the diagnostic trouble code (DTC) can be accessed through the use of a hand-held tester.
For details on the DTCs, refer to the 2001 Prius Repair Manual (Pub. No.RM778U).

10. HV Immobiliser System

The HV immobiliser system has been designed to prevent the vehicle from being stolen. This system uses a HV ECU that stores the ID code of the authorized ignition key. If an attempt is made to start the HV system using an unauthorized key, the HV ECU prohibit fuel delivery, ignition, and starting the HD system effectively disabling the engine.
For details see page 184 in the HV Immobiliser System section.

11. Diagnosis System

The diagnostic trouble codes can be output via DLC3 to an OBD-II scan tool or a hand-held tester. For details, refer to the 2001 Prius Repair Manual (Pub. No.RM778U).

THS (TOYOTA HYBRID SYSTEM)

■DESCRIPTION

The hybrid system is a type of powertrain that uses a combination of two types of motive forces, such as an engine and a motor (MG2). This system is characterized by its skillful use of two types of motive forces according to the driving conditions. It maximizes the strengths of each of the motive forces and complements their weaknesses. Thus, it can achieve a highly responsive, dynamic performance, as well as a dramatic reduction in fuel consumption and exhaust gas emissions. The THS can be broadly divided into two systems: the series hybrid system, and the parallel hybrid system.

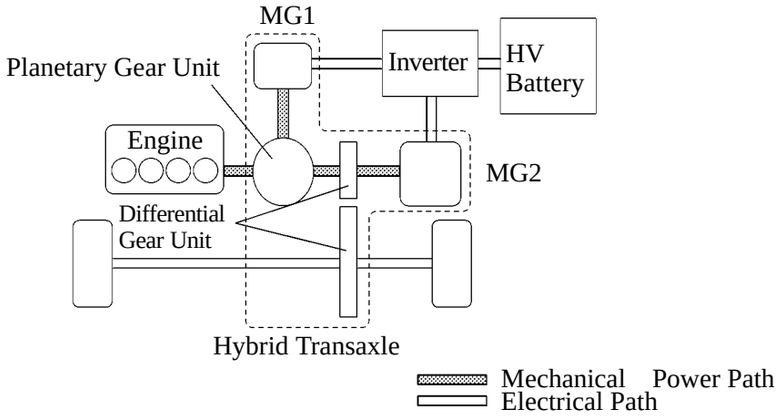

182TH03

– REFERENCE –

Series Hybrid System

In the series hybrid system, the engine runs a generator, and the generated electricity enables the electric motor to drive the wheels. This type of vehicle can be described as an electric car that is equipped with an engine-driven generator.
Equipped with a low-output engine, the engine is operated at a practically constant speed in its most effective range, in order to efficiently recharge the battery while the vehicle is in motion.

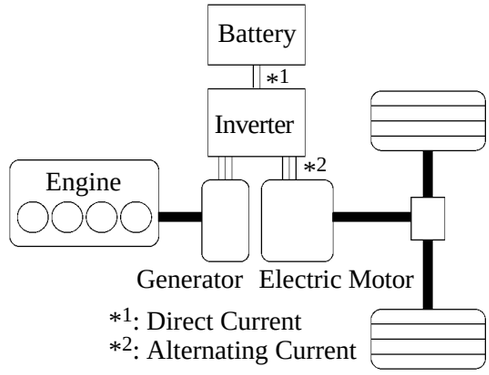

182TH01

Parallel Hybrid System

This system uses both the engine and the electric motor to directly drive the wheels is called the parallel hybrid system. In addition to supplementing the motive force of the engine, the electric motor in this system can also serve as a generator to recharge the battery while the vehicle is in motion.

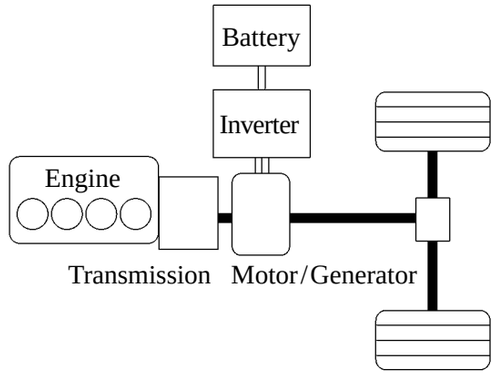

182TH02

■FEATURES OF THS

This system controls the following modes in order to achieve the most efficient operations to match the driving conditions:

1. Supply of electrical power from the HV battery to MG2 provides force to drive the wheels
2. While the tires are driven by the engine via the planetary gears, MG1 is driven via the planetary gears to supply electricity to MG2 to drive the wheels
3. When the vehicle is decelerating, kinetic energy from the wheels is recovered and converted into electrical energy and used to recharge the HV battery by means of MG2.

The HV ECU switches between these modes (1, 2, 1 + 2, or 3) according to the driving conditions. However, when the SOC of the HV battery is low, the HV battery is charged by the engine by turning MG1.

As a result, it achieves far greater the fuel economy compared to conventional gasoline engine vehicles, at a reduced level of exhaust gas emissions. Furthermore, this revolutionary powertrain has eliminated the constraints that are associated with electric vehicles (such as their short cruising range or their reliance on external recharging units).

■LAYOUT OF MAIN COMPONENTS

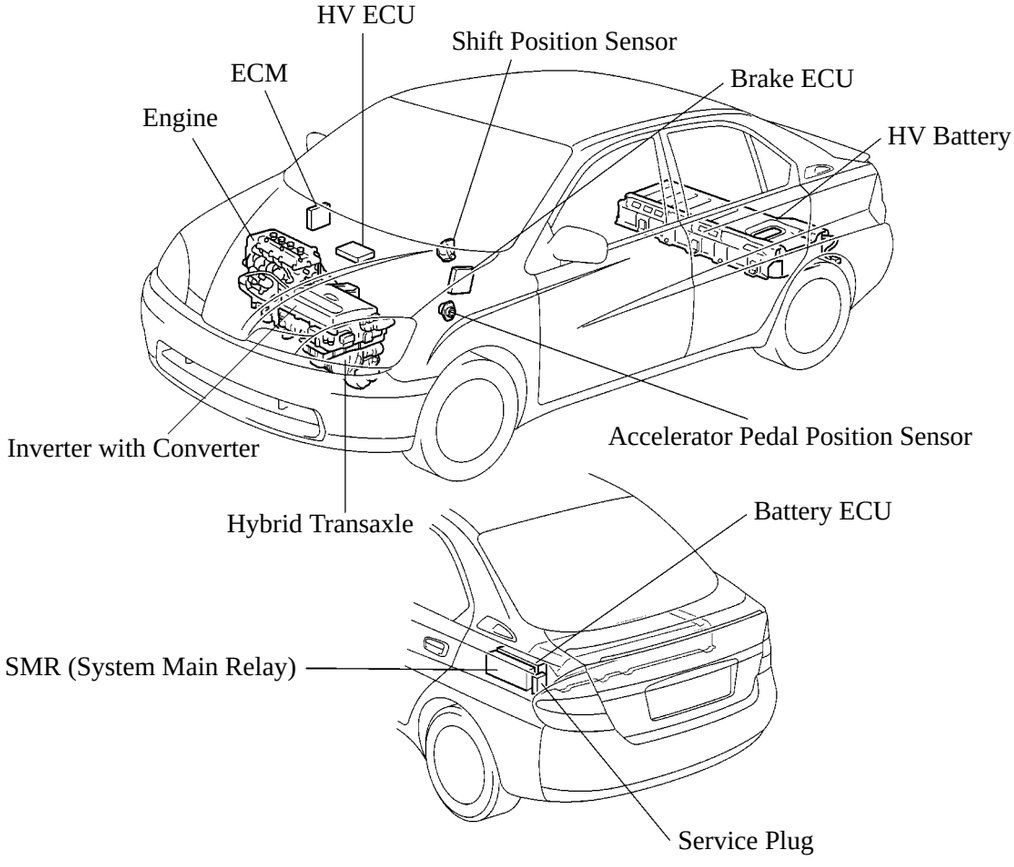

182TH19

■MAIN FUNCTIONS OF COMPONENTS

Hybrid Trans-axle	MG1	Generates high-voltage electricity by being powered primarily by the engine. Also functions as a starter to start the engine.
	MG2	Primarily provide additional power to the engine in order to increase the overall drive force. During braking, or when the accelerator pedal is not depressed, it generates electricity to recharge the HV battery (Regenerative brake system).
	Planetary Gear Unit	Distributes the engine's drive force as appropriate to directly drive the vehicle as well as the generator.
HV Battery		Supplies electric power to the MG2 during start-off, acceleration, and uphill driving; recharged during braking or when the accelerator pedal is not depressed.
Inverter		A device that converts the high-voltage DC (HV battery) into AC (MG1 and MG2) and vice versa (Converts AC into DC).
Converter		Drops the high-voltage direct current (DC 273.6 V) into DC12 V in order to supply electricity to body electrical components, as well as to recharge the auxiliary battery (12 V).
HV (Hybrid Vehicle Control) ECU		Information from each sensor as well as from the ECU (ECM, Battery ECU, ABS ECU) is received, and based on this the required torque and output power is calculated. The HV ECU sends the calculated result to the actuators and controllers.
ECM		Sends a throttle open command to the electronically-controlled throttle in accordance with the engine output request factor received from the HV ECU.
Battery ECU		Monitors the charging condition of the HV battery.
Brake ECU		Controls the regenerative brake that is effected by the MG2 and the hydraulic brake so that the total braking force equals that of a conventional vehicle that is equipped only with hydraulic brakes. Also, the brake ECU performs the ABS control conventionally.
Accelerator Pedal Position Sensor		Converts the accelerator angle into an electrical signal and outputs it to the HV ECU.
Shift Position Sensor		Converts the shift lever position into an electrical signal and outputs it to the HV ECU.
SMR (System Main Relay)		Connects and disconnects the high-voltage power circuit through the use of a signal from the HV ECU.
Service plug		Shuts off the high-voltage circuit of the HV battery when this plug is removed for vehicle inspection or maintenance.

■SYSTEM DIAGRAM

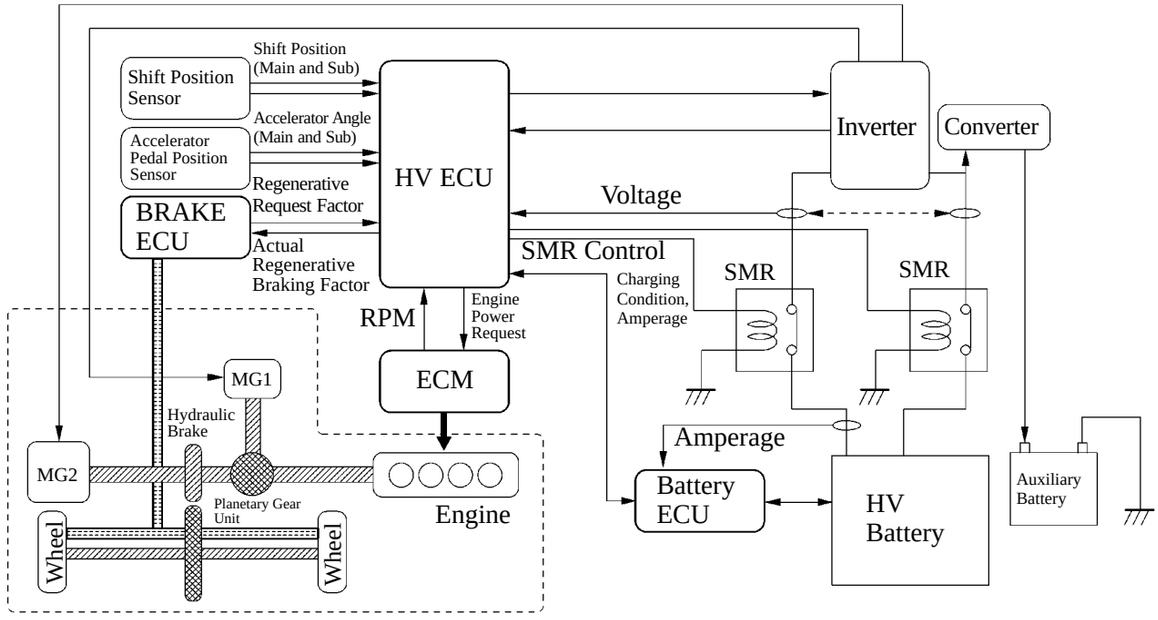

182TH05

Mechanical Power Path
Hydraulic
Electrical Signal

■DRIVING CHARACTERISTICS

Because the Prius uses a parallel series hybrid system, some aspects of its operation may differ from those of existing automobiles, and may require precautions that are unique to this system.

1. Starting the THS

Make sure that the parking brake is engaged and that the shift lever is in the P position.
While depressing the brake pedal, turn the ignition switch to the START position. After this, the “READY” light flashes.
The engine does not start when the shift lever is in the N position; it can only start in the P position. When the external air temperature is low, the “READY” light may flash longer than usual.
As soon as the engine has started, the “READY” light illuminates steadily and a beeping sound is heard.
Several seconds after the engine warms up, the engine stops automatically, provided that the air conditioning compressor does not need to operate and that the HV battery maintains a proper SOC (state of charge).

2. Start-Off

While keeping the brake pedal depressed, release the parking brake, and move the shift lever to the D position.
The vehicle has the same creeping movement as the conventional automatic transmission vehicles.
Gradually release the brake pedal and slowly depress the accelerator pedal to start off.
At this time, the vehicle starts off powered only by the MG2 (Motor Generator No.2)

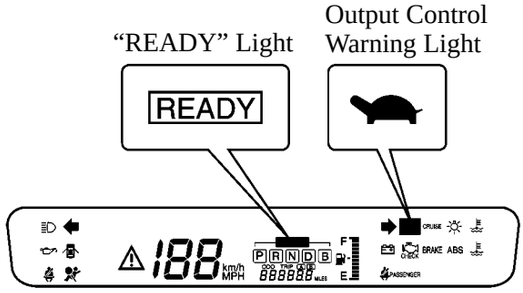

182TH24

NOTICE: The vehicle can be started off, provided that the “READY” light remains illuminated, even if the engine remains stopped.

3. Acceleration

Depress the accelerator pedal to accelerate the vehicle.
If the engine remained stopped during start-off, the engine will start automatically during acceleration.

4. Downhill Driving

Move the shift lever to the B position as necessary in order to simultaneously apply the regenerative brake and the engine friction brake.

5. Deceleration and Stopping

Depress the brake pedal to decelerate and to stop the vehicle.
Depressing the brake pedal causes the regenerative brake to activate automatically in the D or B position. (In the regenerative brake system, kinetic energy is converted to electrical energy.) If the engine has warmed up, the air conditioning compressor does not need to operate, and if the HV battery maintains a proper SOC (state of charge), the engine stops automatically when the vehicle speed drops-even if the vehicle comes to a stop.

6. Parking

Push down the parking brake pedal, move the shift lever to the P position, and pull out the ignition key.

NOTICE: Make sure to pull out the ignition key after parking the vehicle because the vehicle can be driven as long as the “READY” light remains illuminated even if the engine is stopped.

7. Other Characteristics and Precautions

- If a drive wheel slips on slippery terrain, causing the front wheels to spin faster than the rear wheels, the THS effects control to limit the slippage by restraining the drive force. (This also protects the planetary gear from damage.)
- When the HV battery temperature is too high or low, the output control warning light illuminates, alerting the driver that output power may be limited.
  This is not 2 malfunction. This condition may be corrected by avoiding sudden acceleration/decelaration, after which the light will go out.
- When the vehicle is stopped and the shift lever is in the N position, electricity is not generated even if the engine is running. If the vehicle remains stopped for a long time, make sure to move the shift lever to the P position. In heavy traffic, keep the shift lever in the D position.

■THS CONTROL SYSTEM

1. General

The THS control system contains the following components:

HV (Hybrid Vehicle Control) ECU		Controls the MG1, 2 and the engine according to the demand torque, regenerative brake control and the SOC (state of charge) of HV battery. These factors are determined by the shift position, the degree which the accelerator is depressed, and vehicle speed.
	ECM Control	The HV ECU receives engine status data (rpm, torque) from the ECM and determines the engine demand torque. Moreover, engine stop and fuel cut signals are sent according to the driving conditions. In addition, the vehicle speed signal received from the combination meter is also sent.
	BRAKE ECU Control	The HV ECU receives data corresponding to the total braking force needed. The HV ECU transmits the regeneration brake demand torque valve, as well as the regeneration brake execution torque valve.
	Inverter (for MG1, MG2) Control	The HV ECU sends the signal to the power transistor in the inverter for switching the U, V, W, phase of the MG1, 2 in order to drive the MG1 and 2. Moreover, if an overheating, overcurrent or fault voltage signal is received from the inverter, it is shut down.
Converter		When a malfunction is in the Hybrid vehicle control system, the HV ECU sends a signal to the converter, and the converter is stopped.
MG1, MG2		Detects the position of the rotor of the MG1, 2 and controls the current flowing to the MG1, 2. In addition, the temperature is detected and the maximum load is controlled.
Battery ECU		Receives the SOC of the HV battery and the current value.
Airbag Sensor Assembly		Receives the airbag deployment signal.
A/C ECU		Receives the engine power rise demand (when air-conditioning is turned ON) and the engine running demand for water-temperature maintenance.
Accelerator Pedal Position Sensor		Receives the value corresponding to degree at which the accelerator pedal is depressed.
Shift Position Sensor		Receives the shift position signal (P, R, N, D, B).
Cruise Control Switch		Receives the cruise control switch signal.
Stop Light Switch		Receives the brake signal.
Interlock Switch (for Inverter Cover and Service Plug)		Verifies that the cover of both the inverter and the service plug have been installed.
Circuit Breaker Sensor		The high-voltage circuit is intercepted if a vehicle collision has been detected.
Diagnosis		When the HV ECU detects a malfunction, the HV ECU diagnosis and memorizes the values corresponding to the failure.
Fail-Safe		When the HV ECU detects a malfunction, the HV ECU stops or controls the actuators and ECUs according to the data already stored in memory.

2. Construction

The configuration of the THS control system in the Prius is shown in the following chart.

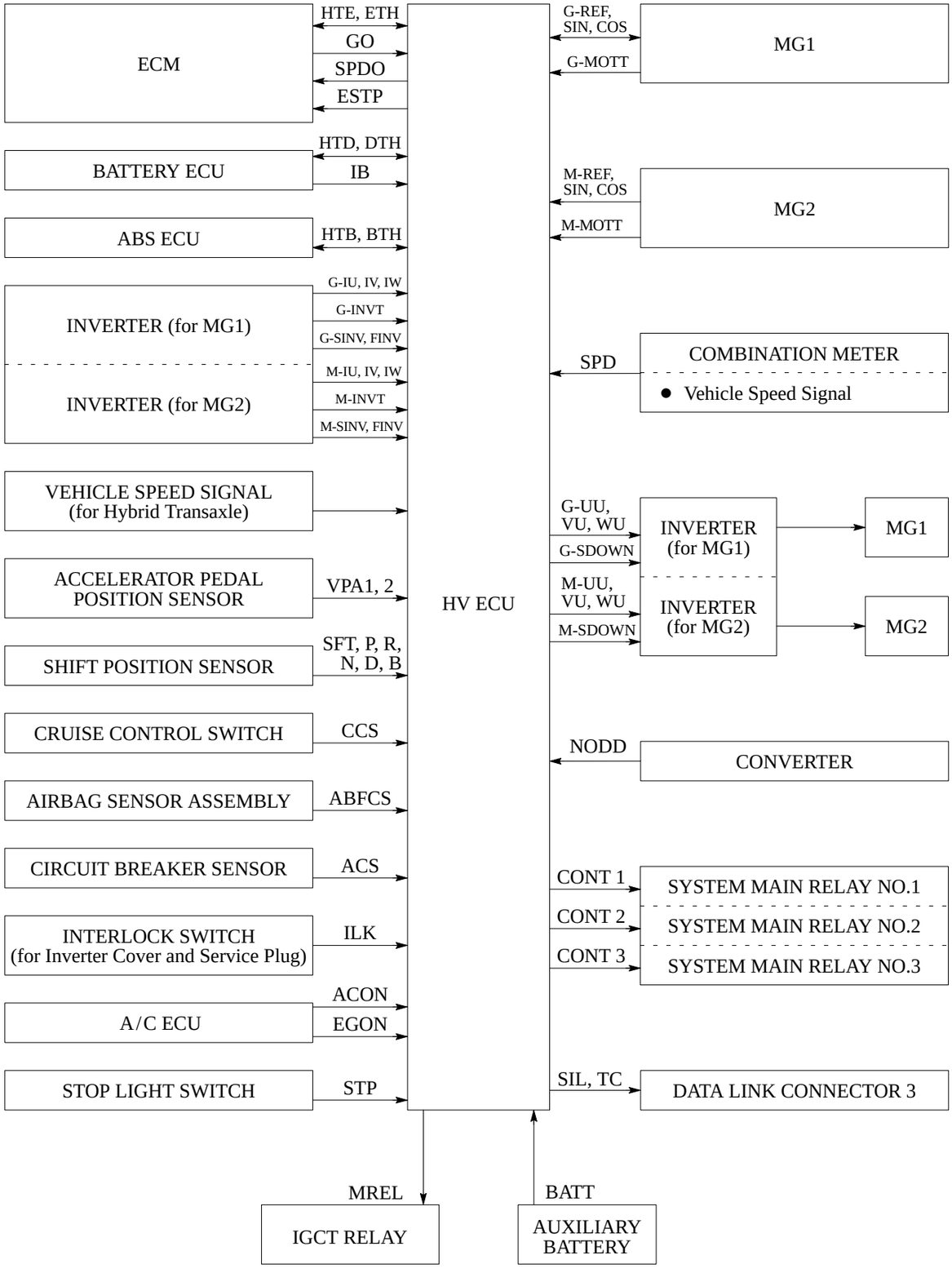

3. ECM Control

The ECM receives the demand torque and the target rpm which were sent from HV ECU (THE, ETH), and controls the degree of throttle valve opening, fuel injection timing, ignition time and VVT-i.
In addition, the actual rpm is sent to the HV ECU with GO, and the speed signal from the hybrid transaxle is received through HV ECU with SPDO.
When the vehicle is stopped, the HV ECU may send an engine stop (ESTP) command to the ECM to reduce fuel used.
When a malfunction occurs in the system, the ECM activates MIL via the directions from the HV ECU.

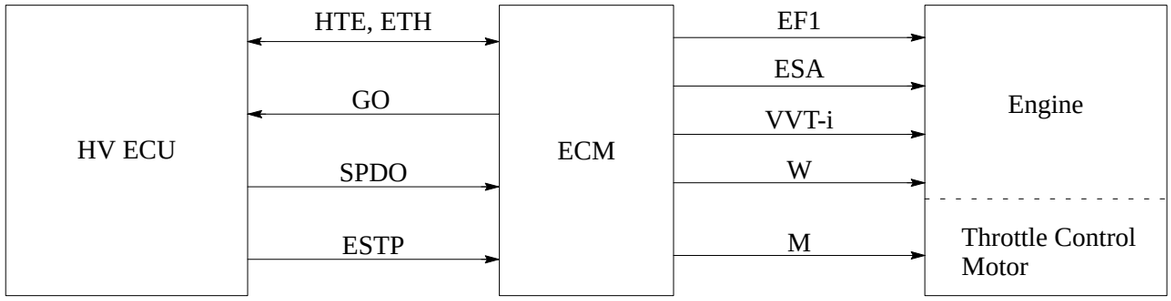

4. BRAKE ECU Control

The brake ECU calculates the total braking force needed, based on the master cylinder pressure in the brake actuator generated when the driver depresses the brake pedal, and sends this valve to the HV ECU.
The HV ECU computes a part for the regeneration brake force from the total braking force, and sends the result to the brake ECU.
The HV ECU executes to the minus torque to MG2, and carries out the regenerative brake functions.
The brake ECU controls the brake actuator solenoid valves and generates the wheel cylinder pressure, which is the regenerative brake force subtracted from the total braking force.

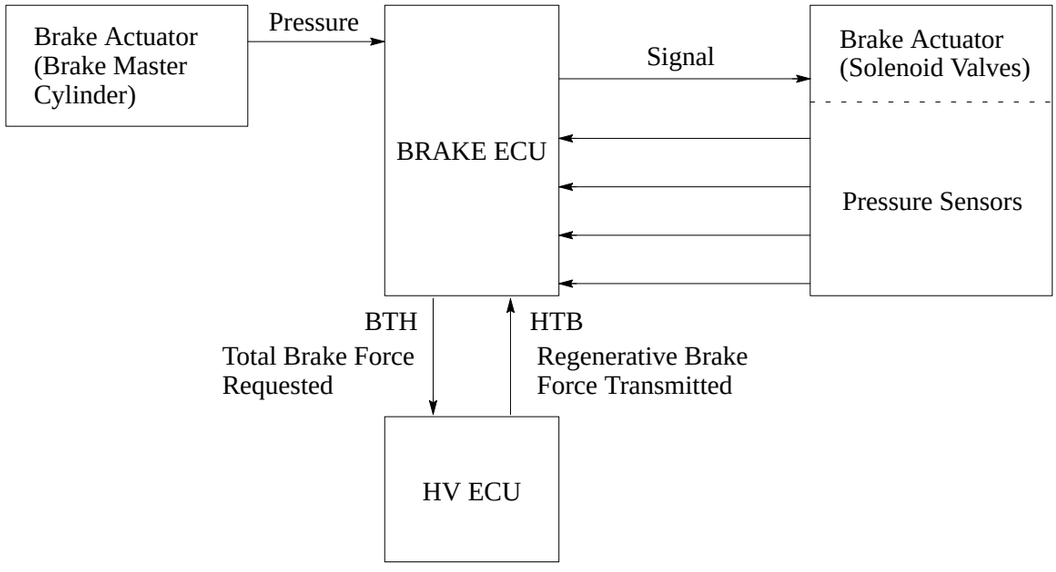

5. Inverter Control (for MG1, MG2)

The HV ECU transmits a signal to the power transistor in the inverter (G-UU, VU, WU, M-UU, VU, WU) for switching the U, V, W phase of the stator coil of MG1 and MG2, based on the rotor position information sent from MG1, 2 (G-SIN, COS, M-SIN, COS) and the SOC of the HV battery sent from the battery ECU. When shutting down the current to MG1, 2, a signal is sent to the inverter from the HV ECU (G-SDOWN, M-SDOWN).

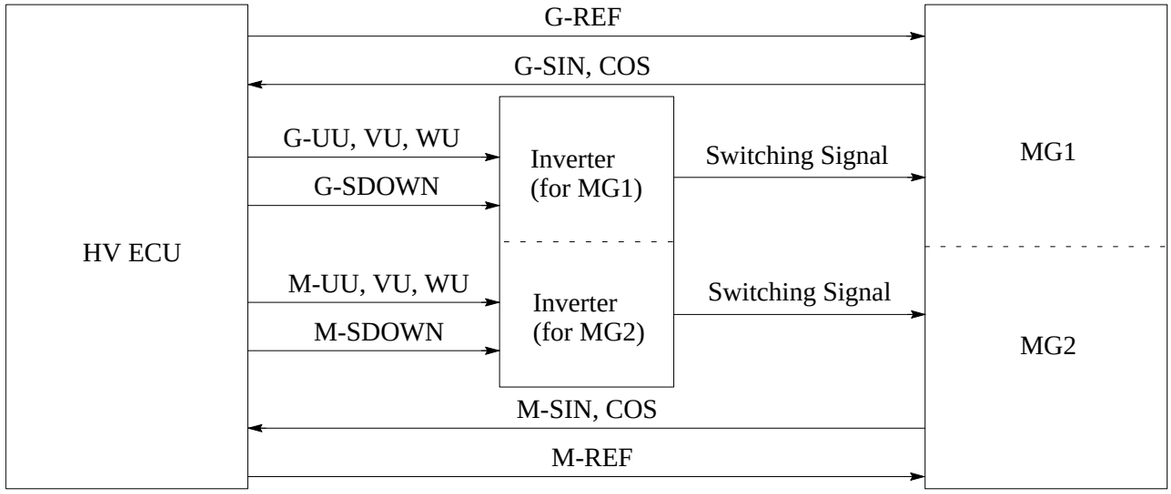

Clutchless System

A clutchless system has been adopted to keep the front wheels and MG2 linked mechanically via gears and a chain. To disengage the drive force in the neutral position, the N position signal from the shift position sensor turns OFF all the power transistors in the inverter (which connects the MG1 and the MG2) in order to shut down the operation of the MG1 and the MG2, thus rendering the drive force at the wheels to zero. In this state, even if the engine is running, the MG1 merely freewheels in the no-load state.
Therefore, if the vehicle is allowed to operate continuously in the N position in a stationary state such as in heavy traffic, the SOC (state of charge) of the HV battery will continue to drop lower and lower.

6. Battery ECU

The SOC, temperature and the voltage of HV battery are detected by the battery ECU, and this information is sent to HV ECU.

– REFERENCE –

The MG1 and the MG2 are generally shut down when the shift lever is in the N position. However, the shut-down function is canceled under the following exceptions:

- *During driving, if the brake pedal is depressed and a wheel locks up, the ABS is activated. After this, low torque is requested from the MG2 to provide supplemental power in order to restart the rotation of the wheel. Even if the shift lever is in the N position at this time, the shut-down function is canceled to allow the wheel to rotate. After the wheel rotation has been restarted, the system resumes its shut-down function.*
- *When the vehicle is driven in the D or B position and the brake pedal is depressed, the regenerative brake operates. At this time, as the driver moves the shift lever to the N position, the brake hydraulic pressure increases while the request torque of the regenerative brake decreases gradually so as not to create a sluggish brake feel. After this, the system effects its shut-down function.*

When any of the conditions described below is present, the message prompt as shown appears in the multi information display, accompanied by the illumination of the master warning light and the continuous sounding of the buzzer.

- *The "READY" light is illuminated, the shift lever is in the N position, and the HV battery is discharged.*
- *The "READY" light is illuminated, the shift lever is in the N position, and the driver's door is open.*

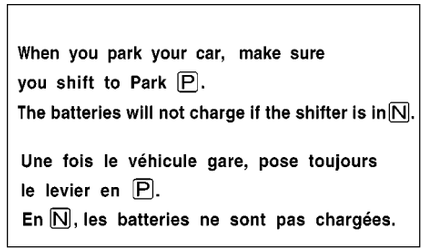

182TH33

- *The "READY" light is illuminated, the parking brake is engaged, the shift lever is in the B or D position, and the driver's door is open.*

■INDICATOR AND WARNING LIGHT

The warning lights of the Prius are different from those on conventional vehicles. Inspection and repair should be performed while referring to the troubleshooting section in the 2001 Prius repair manual (RM778U).

▶ Center Meter ◀ **▶ Multi Information Display ◀**

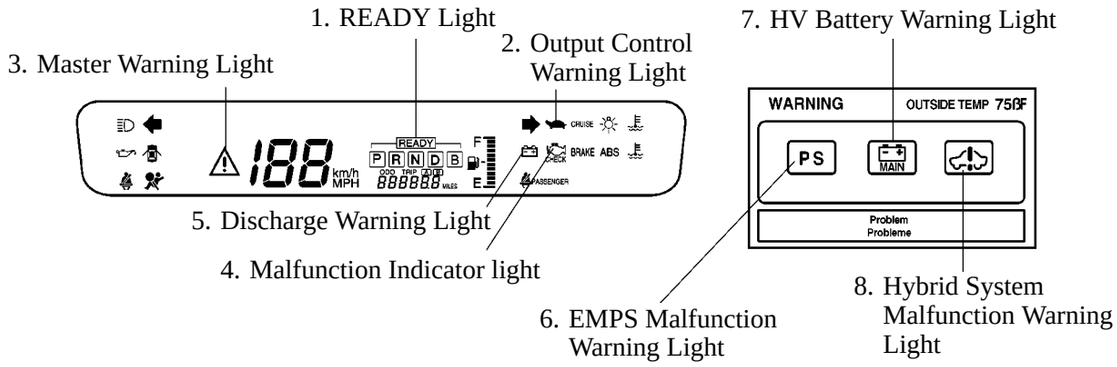

182TH22

1. READY light	Turns on when the ignition switch is turned to START to indicate that the vehicle is ready to drive.
2. Output control warning light	Turns on when the remaining HV battery charge becomes insufficient at R range or when there is an abnormal temperature rise in the HV battery due to continuous driving under heavy loads. It may also light when the HV battery temperature is low (after starting at low temperatures). The hybrid system output is limited while this light is on. ● Travel at reduced speeds (avoid sudden acceleration) while the light is lit.
3. Master warning light	Turns on with buzzer sounding by linked operation with warning lights “6” to “8” on the multi center display.
4. Malfunction indicator light	Turns on when there is a malfunction in the engine control system.
5. Discharge warning light	Turns on when there is a malfunction in the 12 V charging system (converter assembly). ● If it turns on together with the master warning light and hybrid system warning light, check the diagnostic code.
6. EMPS malfunction warning light	Turns on when there is a malfunction in the EMPS control system.
7. HV battery warning light	Turns on when the HV battery is discharged to the lower limit.
8. Hybrid system warning light	Turns on when a malfunction in MG1, 2, inverter, HV battery or HV ECU is detected.

MG1 AND MG2 (MOTOR GENERATOR NO.1 AND NO.2)

■DESCRIPTION

- Both the MG1 and the MG2 are compact, lightweight, and highly efficient alternating current permanent magnet synchronous type.
- Serving as the source of supplemental motive force that provides power assistance to the engine as needed, the electric motor helps the vehicle achieve excellent dynamic performance, including smooth start-offs and acceleration. When the regenerative brake is activated, MG2 converts the vehicle's kinetic energy into electrical energy, which is then stored in the HV battery.
- MG1 recharges the HV battery and supplies electrical power to drive MG2. In addition, by regulating the amount of electrical power generated (thus varying the generator's rpm), MG1 effectively controls the continuously variable transmission function of the transaxle. MG1 also serves as the starter to start the engine.

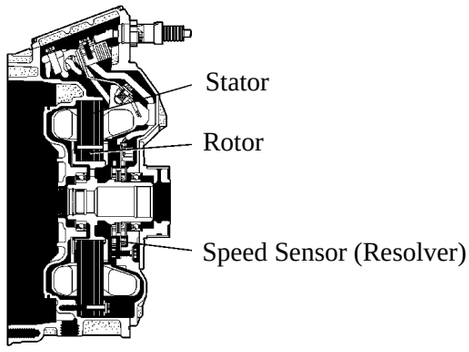

MG1

182CH05

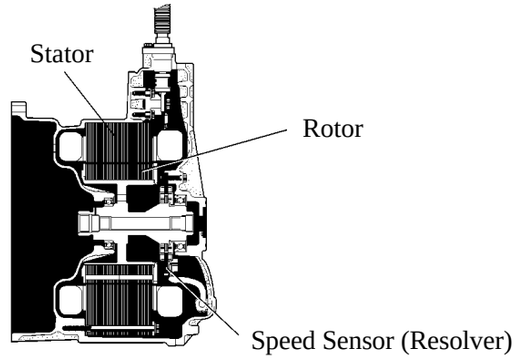

MG2

182CH04

▶ MG2 Specifications ◀

Type	Permanent Magnet Motor (1CM)
Rated voltage [V]	273.6
Maximum output [kW] (rpm)	33/(1040 ~ 5600)
Maximum torque [N·m (kgf·m) (rpm)	350/(0 ~ 400)
Amperage at maximum torque [A]	351
Cooling system	Water-cooled

▶ Performance Curve ◀

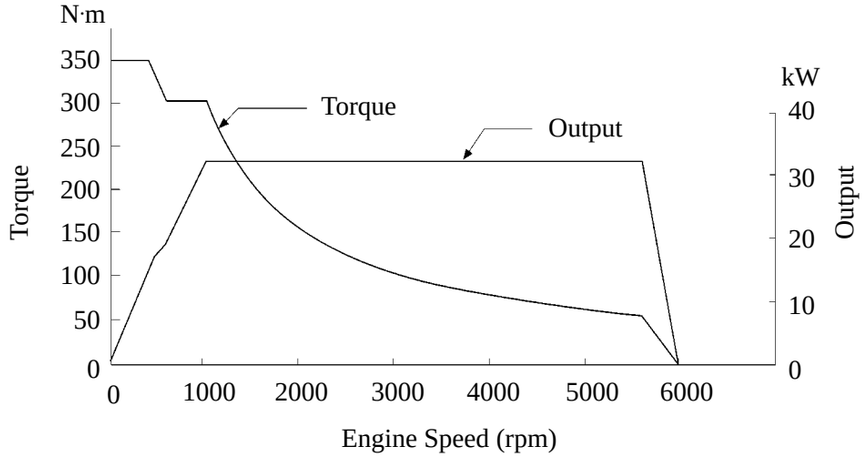

182TH07

1. Permanent Magnet Motor

When a three-phase alternating current is passed through the three-phase windings of the stator coil, a rotational magnetic field is created in the electric motor. By controlling this rotating magnetic field according to the rotor's rotational position and speed, the permanent magnets that are provided in the rotor become attracted by the rotating magnetic field, thus generating torque.

The generated torque is for all practical purposes proportionate to the amount of current, and the rotational speed is controlled by the frequency of the alternating current.

Furthermore, a high level of torque, all the way to high speeds, can be generated efficiently by properly controlling the rotating magnetic field and the angles of the rotor magnets.

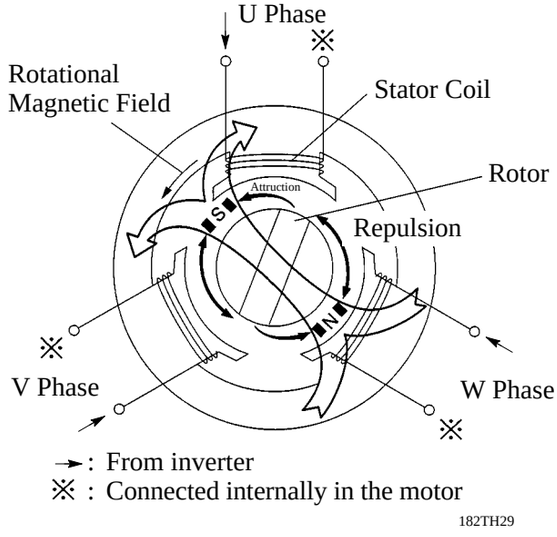

182TH29

2. Speed Sensor (Resolver)

This is an extremely reliable and compact sensor that precisely detects the magnetic pole position, which is indispensable for ensuring the efficient control of MG1 and MG2.

The sensor's stator contains 3 coils as illustrated, and output coils B and C are electrically staggered 90 degrees. Because the rotor is oval, the distance of the gap between the stator and the rotor varies with the rotation of the rotor. Thus, by passing an alternating current through coil A, output that corresponds to the sensor rotor's position is generated by coils B and C. The absolute position can then be detected from the difference between these outputs.

In addition, the amount of positional variance within a predetermined time is calculated by the HV ECU, thus enabling this sensor to be used as an rpm sensor.

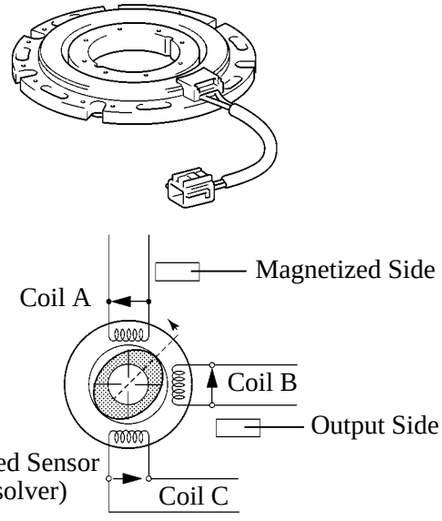

182TH09

3. Power Cable

The power cable is a high-voltage, high-amperage cable that connects the HV battery with the inverter, and the inverter with MG1 and MG2. Starting from the connector at the left front of the HV battery located in the luggage compartment, the power cable is routed under the rear seat, through the floor panel, along the under-the-floor reinforcement, and connects to the inverter in the engine compartment. A shielded cable is used for the power cable in order to reduce electromagnetic interference.

The 12 V ⊕ wiring of the auxiliary battery also follows the same route.

For identification purposes, the high-voltage wiring harness and connectors are color-coded orange to distinguish them from those of the ordinary low-voltage wiring.

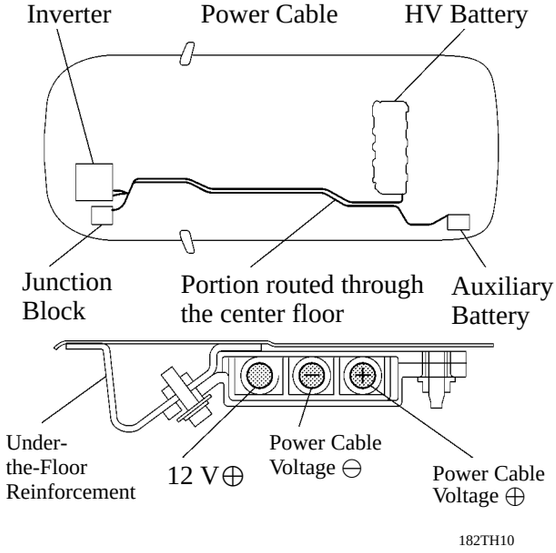

182TH10

INVERTER

1. General

The inverter is an electric power converter that converts the direct current of the Hybrid vehicle's high-voltage battery (DC 273.6 V) and the alternating current of the MG1 and MG2.
Consisting of 2 three-phase bridge circuits for MG1 and MG2, respectively, and each containing 6 power transistors, the inverter converts direct current and three-phase alternating current. The activation of the power transistors is controlled by the HV ECU. In addition, the inverter transmits information that is needed for current control, such as the output amperage or voltage, to the HV ECU.
Together with MG1 and MG2, the inverter is cooled by the dedicated radiator of the coolant system that is separate from that of the engine.

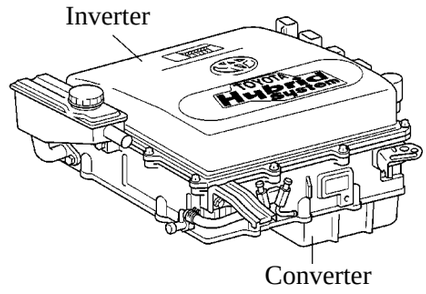

182TH26

2. System Diagram

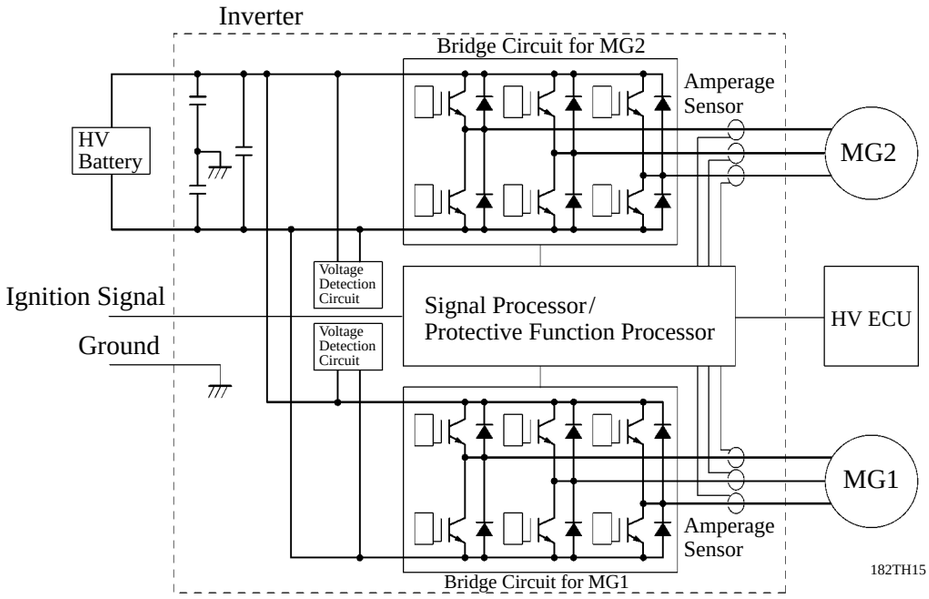

182TH15

3. Cooling System

A cooling system via water pump for the inverter and MG1, 2 has been added.
The HV ECU controls the water pump with coolant temperature.
It is separated with the engine cooling system.

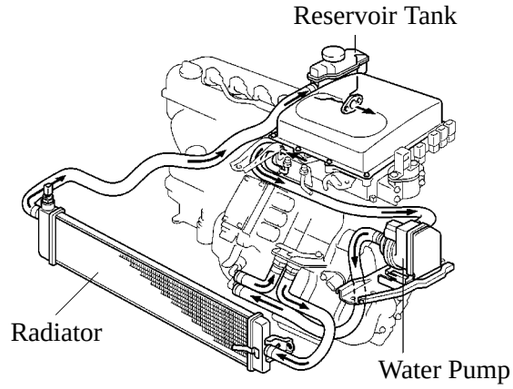

182TH27

CONVERTER

1. General

The power source for auxiliary equipment of the vehicle such as the lights, audio system, and the air conditioner cooling fan, as well as the ECUs, is based on a 12 V system. Because the THS generator outputs at 273.6 V, the converter is used to transform the voltage from DC273.6 V to DC 12 V in order to recharge the auxiliary battery. The converter is installed on the underside of the inverter.

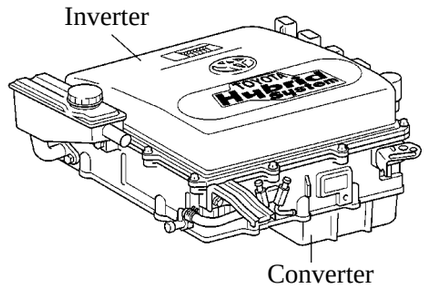

182TH26

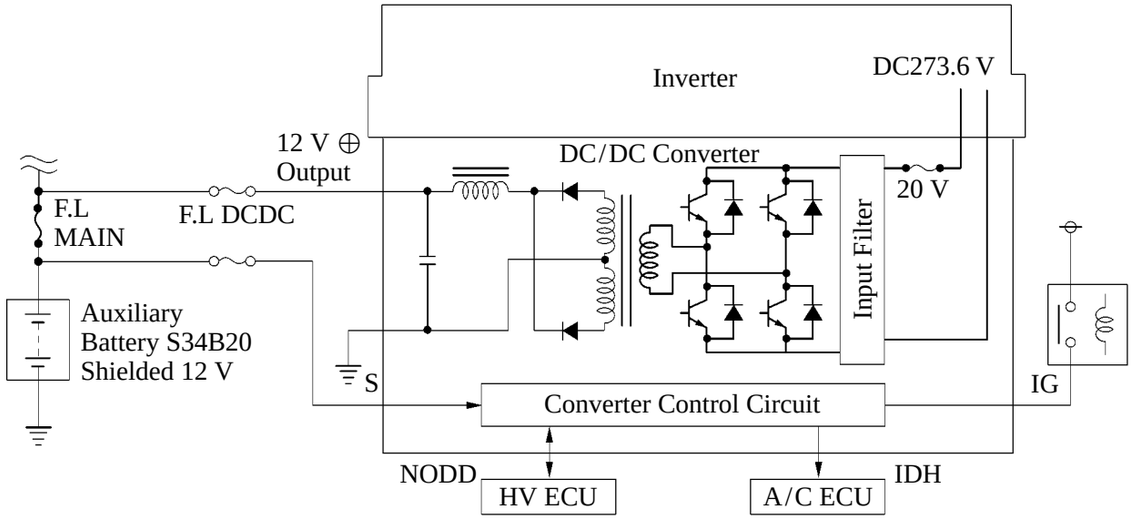

182TH17

2. Operation

- The DC273.6 V input is initially converted into alternating current by the transistor bridge circuit and transformed into a low voltage by the transformer. After this, the current is rectified, smoothed (into direct current) and converted into DC12 V.
- The voltage at the positive terminal of the auxiliary battery is monitored by the converter and is maintained at a constant level. Consequently, the voltage of the auxiliary battery is unrelated to the engine rpm (even if the engine is stopped) and to the auxiliary equipment (output current of converter).

HV BATTERY

■DESCRIPTION

The sealed nickel metal hydride (Ni-MH) battery technology has been further evolved in the newly developed HV battery that offers features such as high power density, lightweight, and longevity, that are specifically designed to match the characteristics of the THS. Because the THS effects charge/discharge control to maintain a constant level of SOC (state of charge) while the vehicle is operating normally, it does not rely on the use of external rechargers.

In the battery area, six 1.2-volt cells are connected in series to form one module. A total of 38 modules are divided into two holders and connected in series. Thus, the HV battery containing a total of 228 cells has a rated voltage of 273.6 V.

The electrode plates in the HV battery are made of materials such as porous nickel and metal hydride alloy.

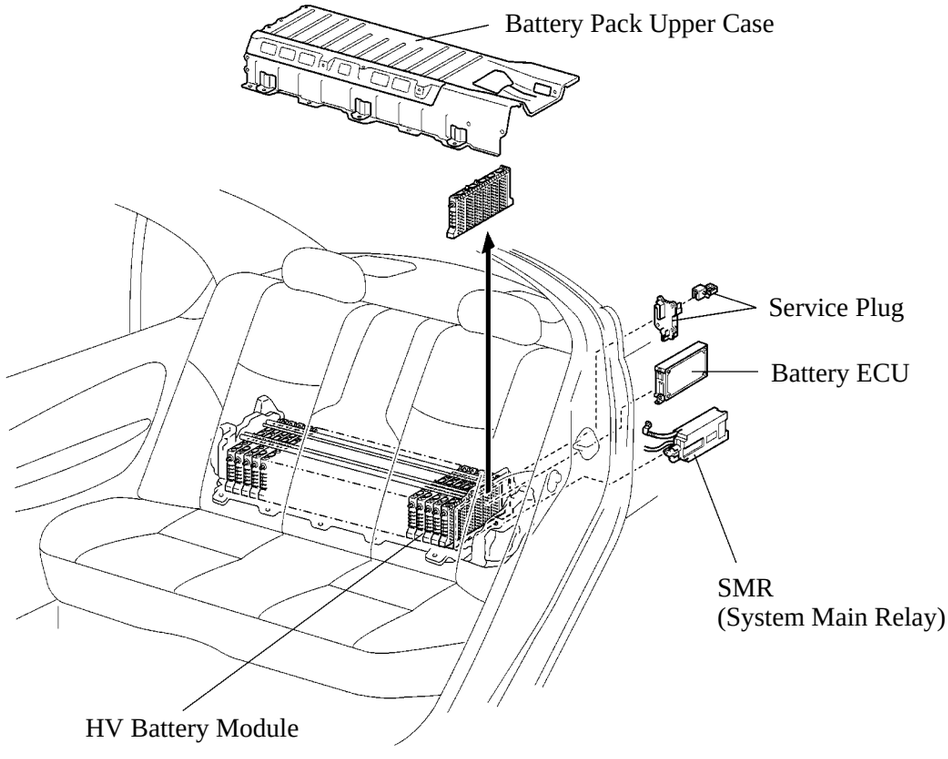

182TH34

HV BATTERY CONTROL SYSTEM

■DESCRIPTION

To maintain the battery at a proper SOC (state of charge), and to ensure safety in the event that the HV battery malfunctions, the battery ECU features the following control functions:

▶ System Diagram ◀

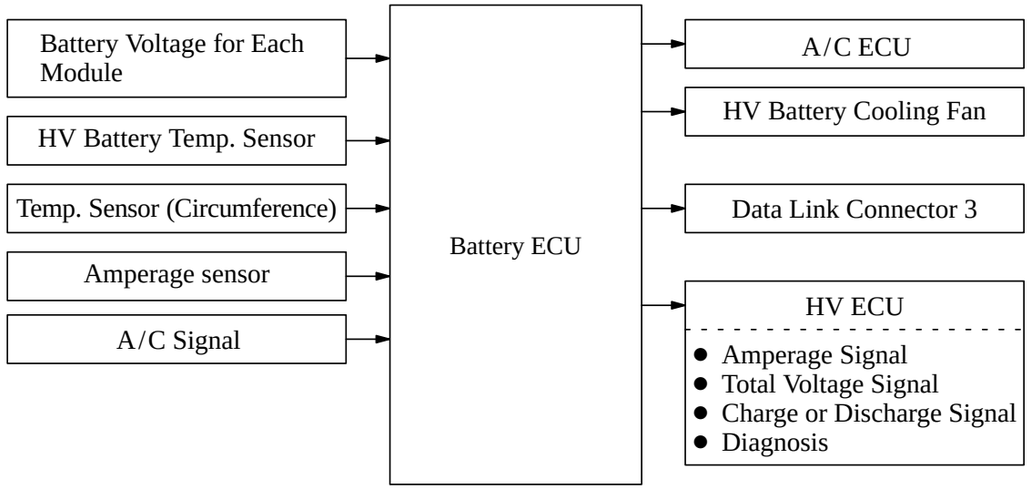

■CONSTRUCTION

- The HV battery, battery ECU, and SMR (system main relay), are enclosed in a single case and placed in the luggage compartment behind the rear seat to make more effective use of vehicle space.
- In the battery area, six 1.2-volt cells are connected in series to form one module. A total of 38 modules are connected in series.
  Thus, the HV battery containing a total of 228 cells has a rated voltage of 273.6 V.
- A service plug that shuts off the circuit is provided in the middle of the 38 modules. Before servicing any portion of the high-voltage circuit, make sure to remove the service plug. For further details, refer to the 2001 Prius Repair Manual (Pub No. RM778U).

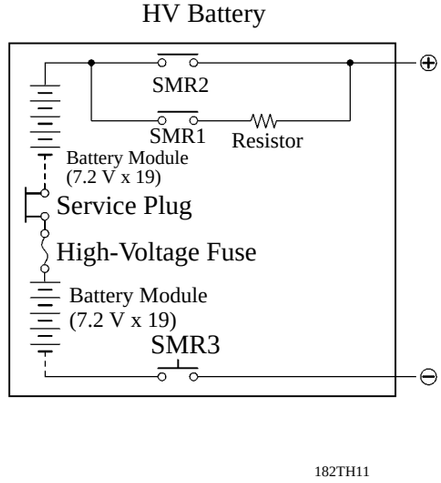

182TH11

1. Battery ECU

The battery ECU provides the following functions.

SOC (state of charge) Control

While the vehicle is in motion, the HV battery undergoes repetitive charging/discharging cycles, as it becomes discharged by the MG2 during acceleration and charged by the regenerative brake during deceleration. The battery ECU outputs charge/discharge requests to the HV ECU so that the SOC can be constantly maintained at a center level, by estimating the charging/discharging amperage.

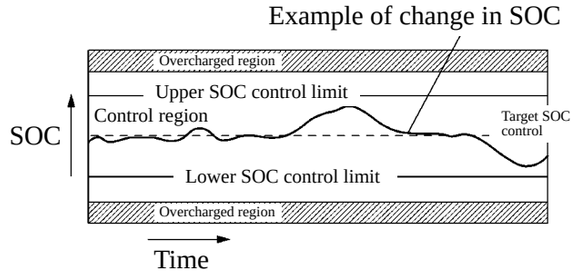

182TH12

Cooling Fan Control

To ensure the HV battery's performance considering the heat that is generated in the HV battery during charging and discharging, the battery ECU controls the operation of the cooling fan.

HV Battery Malfunction Monitoring

This function includes the monitoring of the temperature and the voltage of the battery via the battery ECU. If a malfunction is detected, the battery ECU protects the HV battery by restricting or stopping the charging and discharging of the HV battery. In addition, this function illuminates the warning light, outputs DTCs (Diagnostic Trouble Codes), and stores them in memory. For further details on the DTCs, refer to the 2001 Prius Repair Manual (Pub No. RM778U).

2. SMR (System Main Relay)

The SMR is a relay that connects and disconnects the power source of the high-voltage circuit upon receiving a command from the HV ECU. A total of 3 relays, one for the negative side, and two for the positive side, are provided to ensure proper operations.

At the time of connection, SMR1 and SMR3 are turned ON; after this, SMR2 is turned ON and SMR1 is turned OFF. By allowing the controlled current via the resistor to pass through initially in this manner, the circuit is protected against rush current.

At the time of disconnection, SMR2 and SMR3 are turned OFF in that order, and the HV ECU verifies that the respective relays have been properly turned OFF.

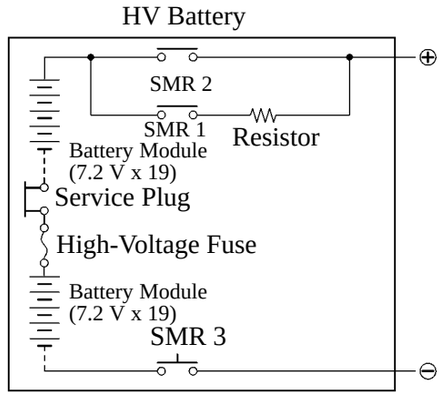

182TH11

3. Service Plug

By removing the service plug before performing any inspection or service, the high-voltage circuit is shut off at the intermediate position of the HV battery, thus ensuring safety during service.

The service plug assembly contains a reed switch for interlock. Lifting the clip lock up turns OFF the reed switch, which shuts off the SMR. However, to ensure safety, make sure to turn OFF the ignition switch before removing the service plug. For further details on how to handle the service plug, refer to the 2001 Prius Repair Manual (Pub No. RM778U). The main fuse for the high-voltage circuit is provided inside of the service plug assembly.

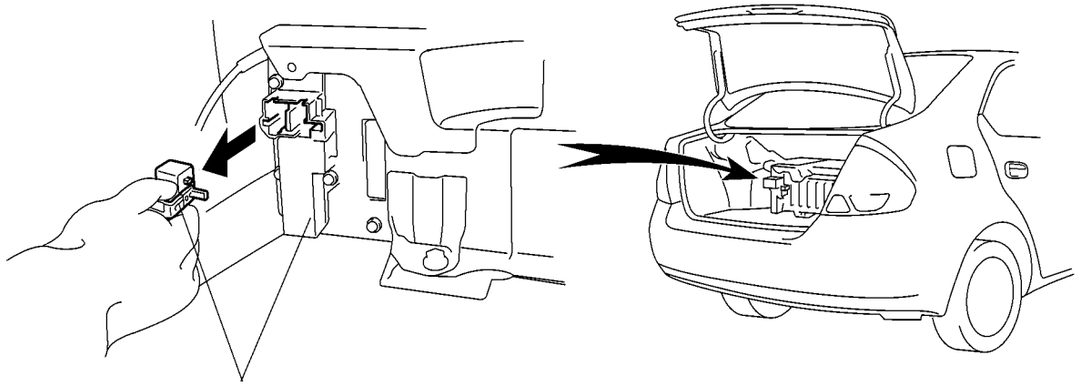

Service Plug

182TH30

HV BATTERY COOLING SYSTEM

■DESCRIPTION

When the temperature of the HV battery rises, the battery ECU executes a command to cause the cooling fan to operate from OFF to LO, MID and HI speeds. However, if the air conditioning is being used at that time to cool the vehicle's interior, and if there is still some margin left in the temperature of the HV battery, the battery ECU keeps the fan OFF or running at LO speed, thus giving priority to the air conditioning.
The air intake for the cooling fan is located above the package tray trim. If an object (such as clothing) is placed over this area, the HV battery might not be able to cool sufficiently, which could cause the output control warning light to illuminate.

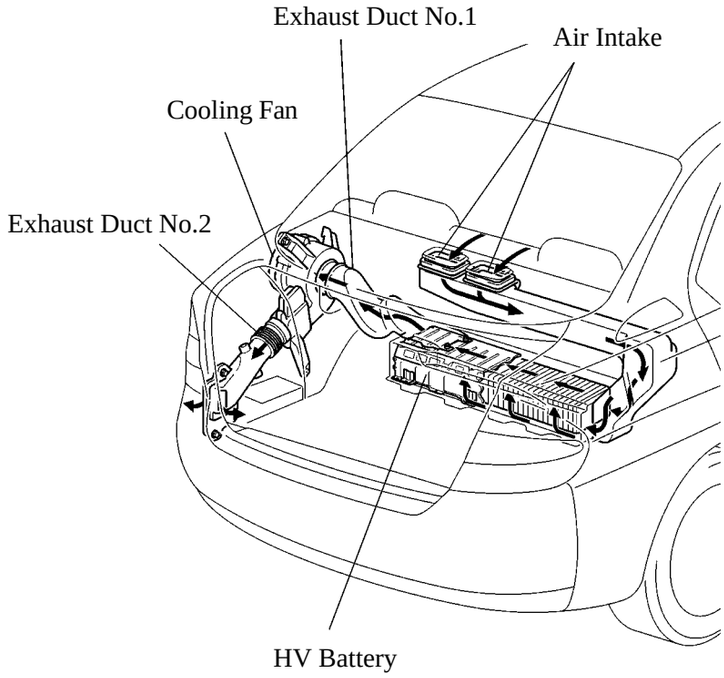

■CONSTRUCTION

This system feature a cooling fan which is driven by DC motor.

▶ Specifications ◀

Type		Sirocco Fan
Fan Size Dia x H mm (in.)		100 x 40 (4.0 x 1.6)
Motor Type		DC Motor
Air Flow Volume m^3/h	Lo	50
	Mid	100
	Hi	150
Power Consumption W		60

- The operation of the cooling fans is controlled by the signals that are output by the battery ECU, which monitors the temperature of the HV battery.

AUXILIARY BATTERY

■DESCRIPTION

The shielded, maintenance-free 12V battery (S34B20L) for the Prius is used.
Battery fluid is filtered into separators in order to reduce hydrogen gas released which occurs when the battery is charged.
Therefore, battery fluid does not need to be replaced, as long as the specified battery is used.

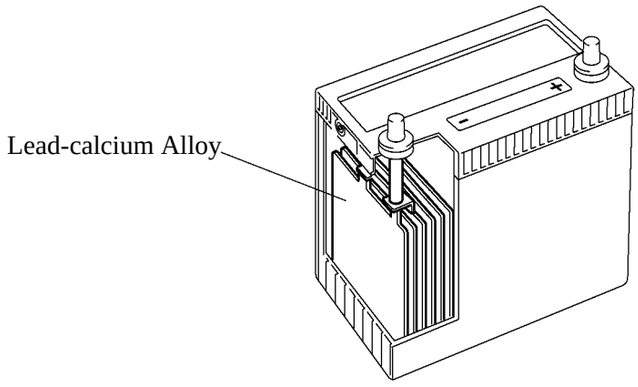

182TH21

HV IMMOBILISER SYSTEM

The HV immobiliser system has been designed to prevent the vehicle from being stolen. This system uses a ECM that stores the ID code of the authorized ignition key. If an attempt is made to start the HV system using an unauthorized key, the ECM prohibit fuel delivery and ignition, effectively disabling the engine.

CHASSIS

P111 HYBRID TRANSAXLE

■DESCRIPTION

The P111 hybrid transaxle has been newly developed for the hybrid system application.
Containing a MG (Motor Generator) 2 for driving the vehicle and a MG (Motor Generator) 1 for generating electrical power, the P111 hybrid transaxle uses a continuously variable transmission mechanism with power splitting device that achieve smooth and quiet operation.

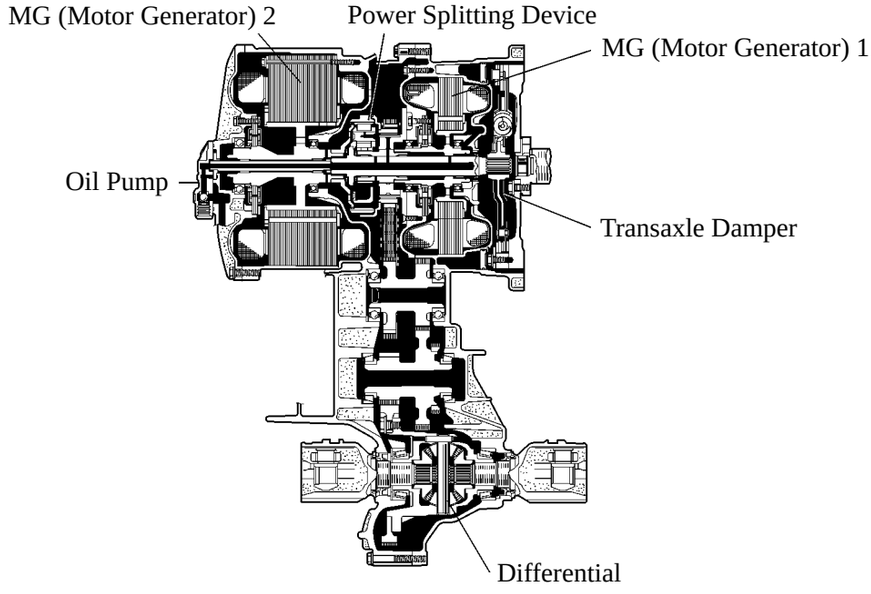

▶ Specifications ◀

Planetary Gear	The No. of Ring Gear Teeth	78
	The No. of Pinion Gear Teeth	23
	The No. of Sun Gear Teeth	30
Gear Ratio		3.905
Chain	Number of Links	74
	Drive Sprocket	39
	Driven Sprocket	36
Counter Gear	Drive Gear	30
	Driven Gear	44
Final Gear	Drive Gear	26
	Driven Gear	75
Fluid Capacity	Liters (US qts, Imp.qts)	4.6 (4.9, 4.0)
Fluid Type		ATF Type T-IV or equivalent

■TRANSAXLE UNIT

1. General

The transaxle unit consists primarily of a transaxle damper, MG (Motor Generator) 1, MG2, power splitting device and a reduction unit (containing a silent chain, counter gears, and final gears).

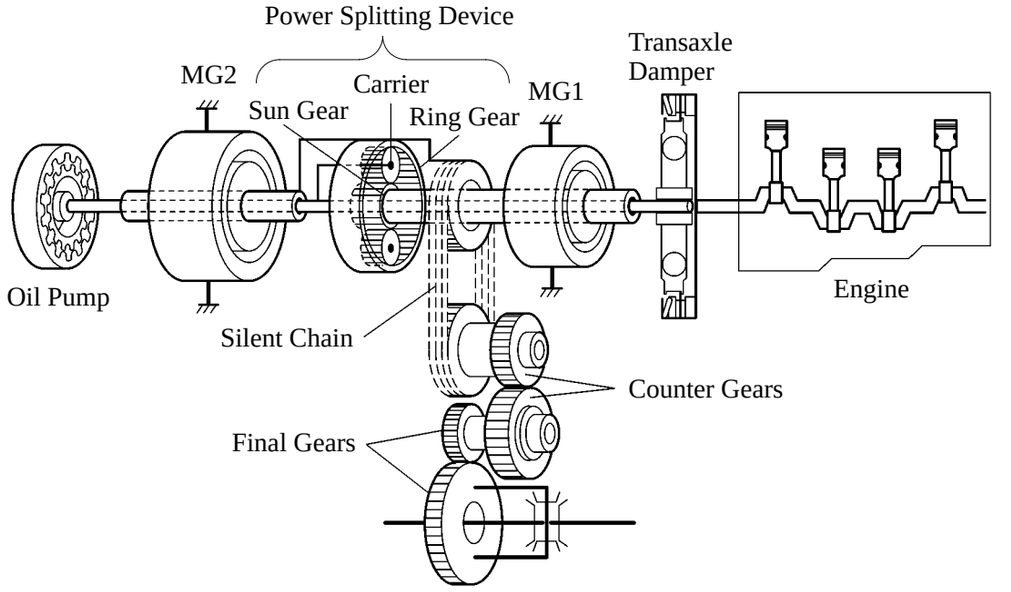

2. Transaxle Damper

- A coil-spring type damper with low-twist characteristics has been adopted as the mechanism to transmit the drive force from the engine.
- A torque fluctuation absorbing mechanism that uses a dry-type single-plate friction material has been adopted.

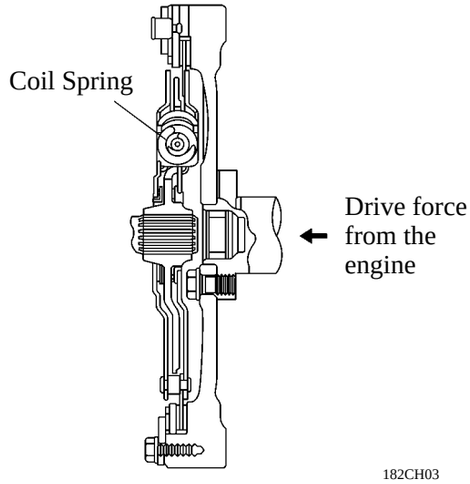

3. MG (Motor Generator) 1

The MG1 recharges the HV (Hybrid Vehicle) battery and supplies electrical power to drive the MG2. In addition, by regulating the amount of electrical power generated, thus varying the MG2's speed, the MG1 effectively controls the continuously variable transmission function of the transaxle. Connected to the sun gear of the planetary gear unit, MG1 also functions as a starter for starting the engine.

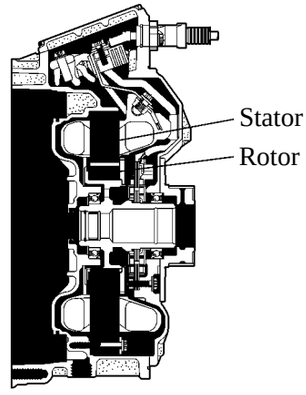

182CH05

4. MG (Motor Generator) 2

Serving as the source of supplemental motive force that provides power assist to the output of the engine as needed, the electric motor helps the vehicle achieve an excellent dynamic performance that includes smooth start-offs and acceleration. Connected to the ring gear in the planetary gear unit, MG2 is an electric motor that converts the vehicle's kinetic energy that is generated through the activation of the regenerative brake into electrical energy, which is then stored in the HV batteries.

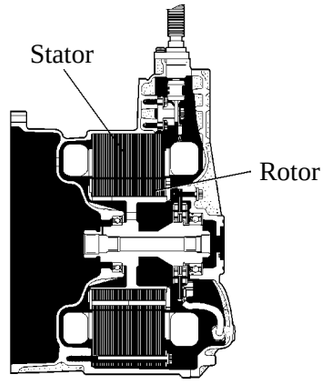

182CH04

5. Power Splitting Device

General

Planetary gear unit is used for a power splitting device.
As part of the planetary gear unit, the sun gear is connected to MG1, the ring gear is connected to MG2, and the carrier is connected to the engine output shaft. The motive force is transmitted via the chain to the counter drive gear.

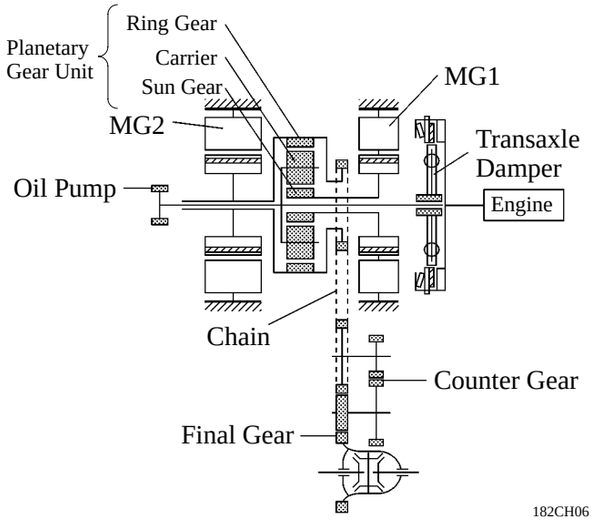

Item	Connection
Sun Gear	MG1
Ring Gear	MG2
Carrier	Engine Output Shaft

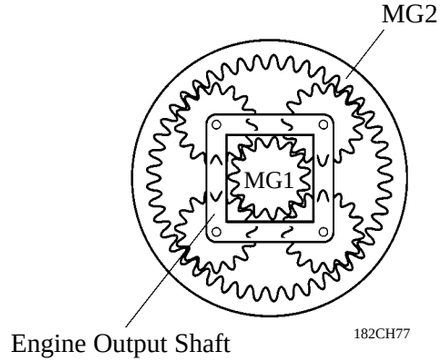

Operation

1) Starting the Engine

Both while the vehicle is stopped and is in motion, the starting of the engine is performed by MG1. Because the motive force is transmitted at this time to the ring gear in the planetary gear unit, an electrical current is applied to MG2 to cancel out the motive force (reactive control).
The nomographic chart below gives a visual representation of the planetary gear's rotational direction, rotational speed, and power balance. In the nomographic chart, the rpm of the 3 gears maintain a relationship in which they are invariably joined by a direct line.

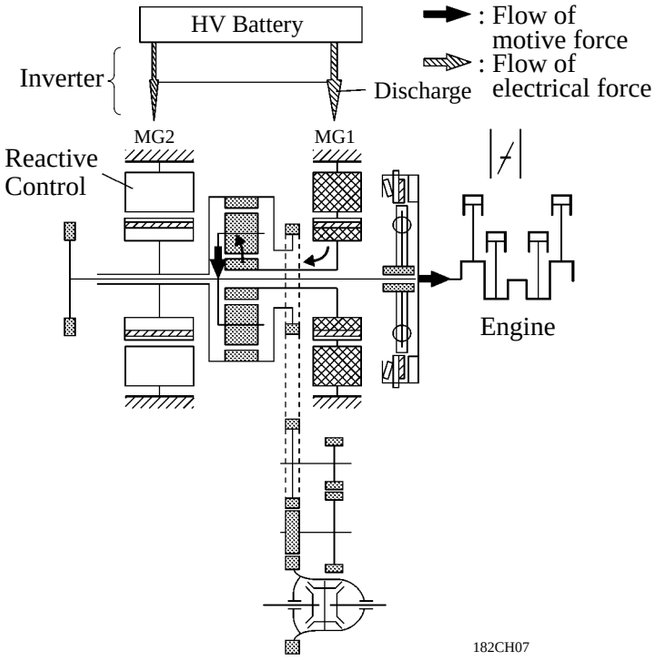

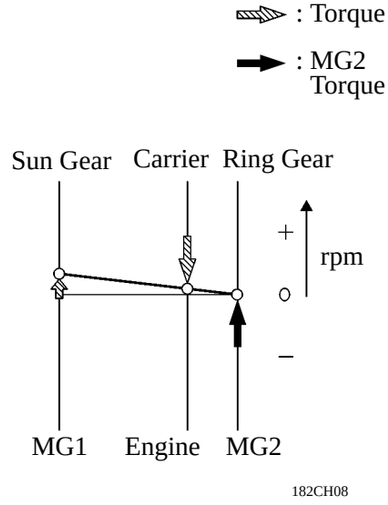

Nomographic Chart of Planetary Gear Unit

2) Generation During Shift Position P

When the shift lever is in the P position, if the SOC (State Of Charge) of the HV batteries exceeds the specified value, the engine remains stopped. However, if the SOC is below the specified value, the engine operates to generate electricity through MG1 in order to recharge the HV batteries. At this time, reactive control is effected to allow the electric current to flow from the HV batteries to MG2, thus receiving the reactive force of MG2.

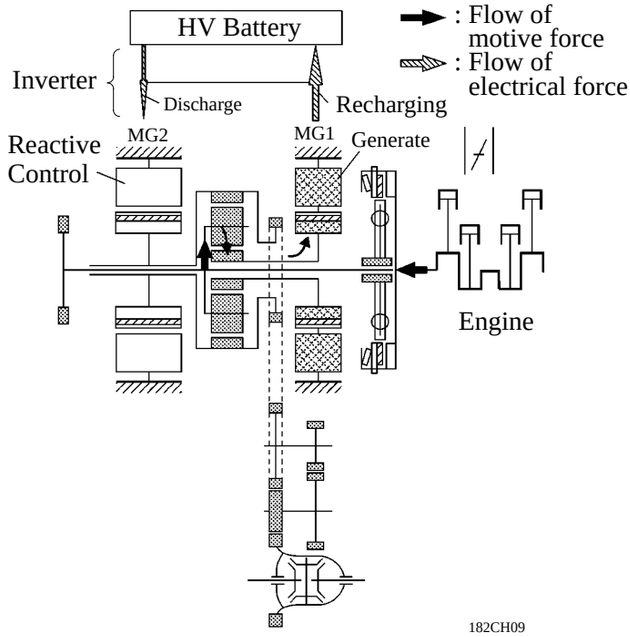

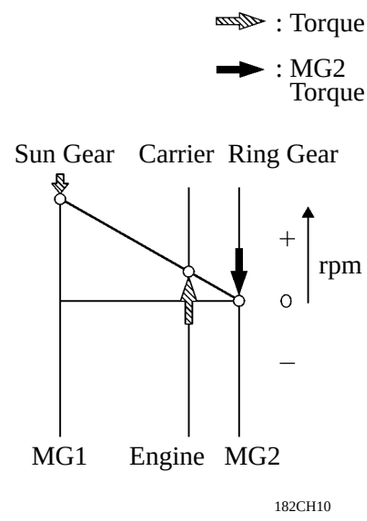

Nomographic Chart of Planetary Gear Unit

3) Starting and Light-Load Driving

When the vehicle is started off or is being driven under light-load conditions, and the SOC of the HV batteries exceeds the specified value, the vehicle operates powered only by MG2. At this time, the engine remains stopped, and MG1 is spinning in the opposite direction without generating electricity. If the SOC is below the specified value, the engine operates to generate electricity through MG1 in order to recharge the HV batteries.

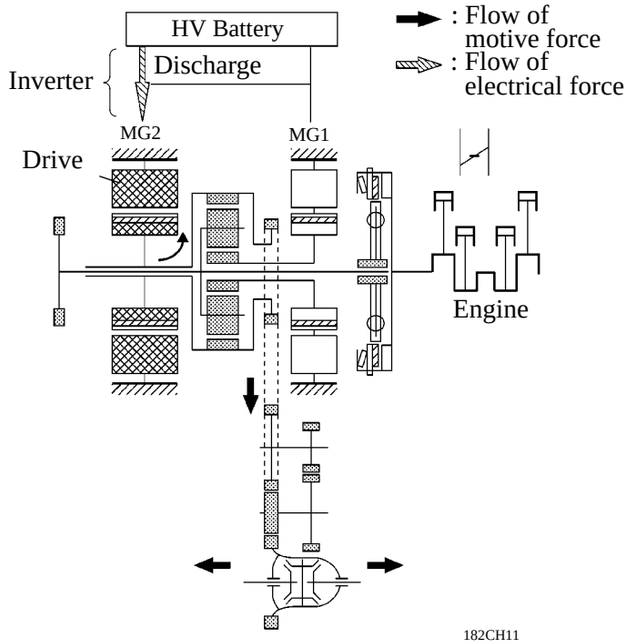

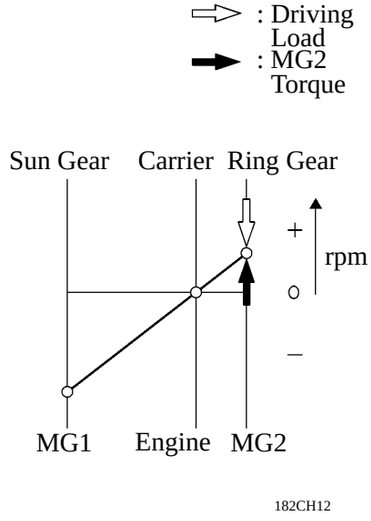

Nomographic Chart of Planetary Gear Unit

4) Normal Traveling

When the vehicle is being driven under normal traveling condition, the motive force of the engine is divided by the planetary gears. A portion of this motive force is output directly, and the remaining motive force is used for generating electricity through MG1. Through the use of an electrical path of an inverter, this electrical force is sent to MG2 to be output as the motive force of MG2. Under further high-load conditions, the electrical force from the HV batteries is also used as a motive force of MG2.

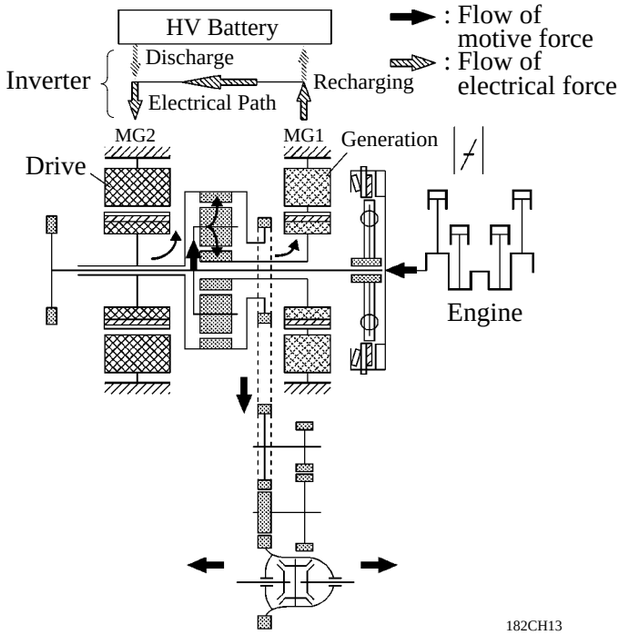

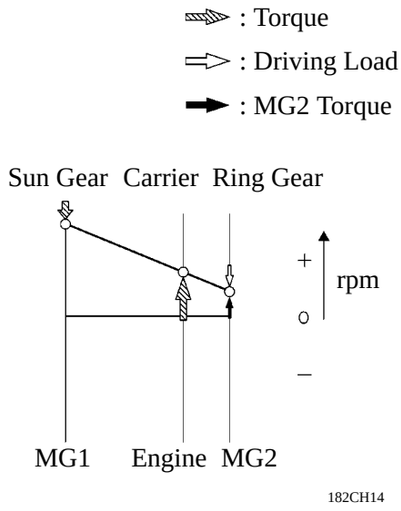

Nomographic Chart of Planetary Gear Unit

5) Deceleration Driving

If the SOC of the HV batteries is within the specified value during deceleration, electricity is generated by MG2 to recharge the HV batteries. If the SOC is excessive, the apportionment of energy to the hydraulic brakes is increased. However, if the shift lever is in position B, the engine is started by MG1 in order to apply the engine brake.

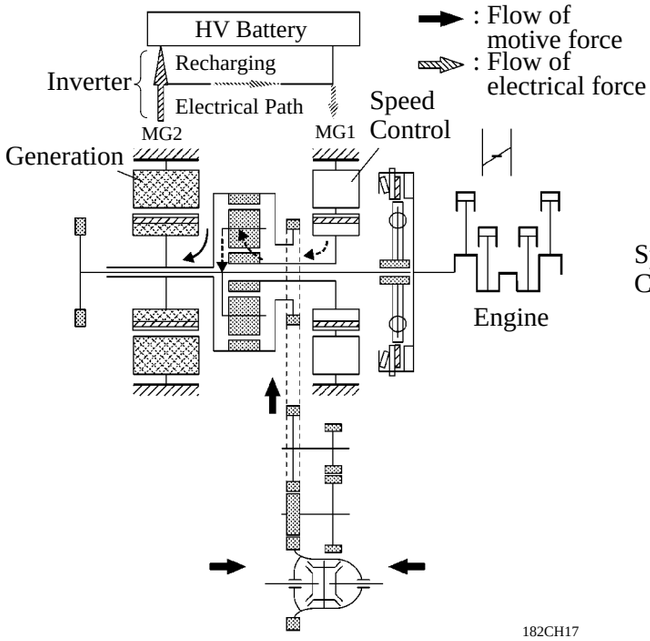

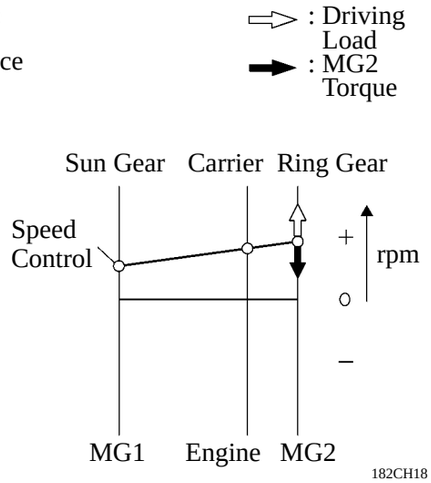

Nomographic Chart of Planetary Gear Unit

6) Reverse Driving

The vehicle drives in reverse powered only by MG2. If the SOC of the HV batteries exceeds the specified value, the vehicle drives powered only by MG2. If the SOC is below the specified value, the engine starts, and the electrical force generated by MG1 passes through the electrical path function of the inverter in order to be used as the motive force of MG2.

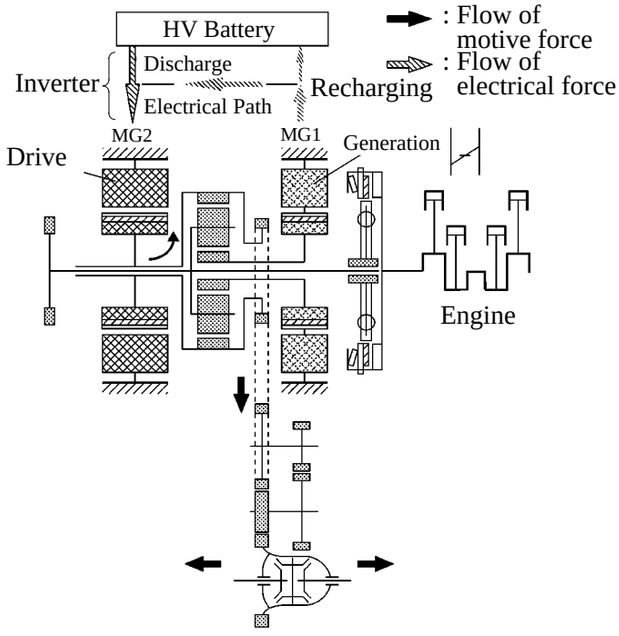

182CH19

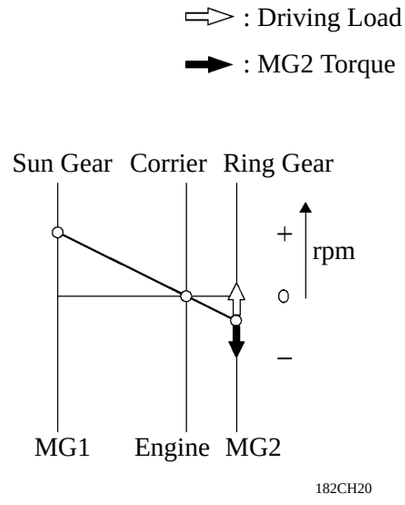

182CH20

Nomographic Chart of Planetary Gear Unit

NOTICE

Because it is not possible for this transaxle to separate the MG2 output force from the drive wheels when the shift lever is in position N, the generation of electricity is disabled. In this condition, the generation of electricity could cause the motive force to be transmitted, which creates a hazardous situation. Therefore, beware that the HV batteries could become discharged in this state.

6. Reduction Unit

The reduction unit consists of the silent chain, counter gears and final gears.
A silent chain with a small pitch width has been adopted to ensure quiet operation, and the overall length has been reduced in contrast to the gear-driven mechanism.
The counter gears and final gears teeth have been processed through high-precision housing and their tooth flanks have been optimized to ensure extremely quiet operation.
The final gears have been optimally allocated to reduce the distance between the engine's center shaft and the differential shaft, thus resulting in a transmission with a compact package.

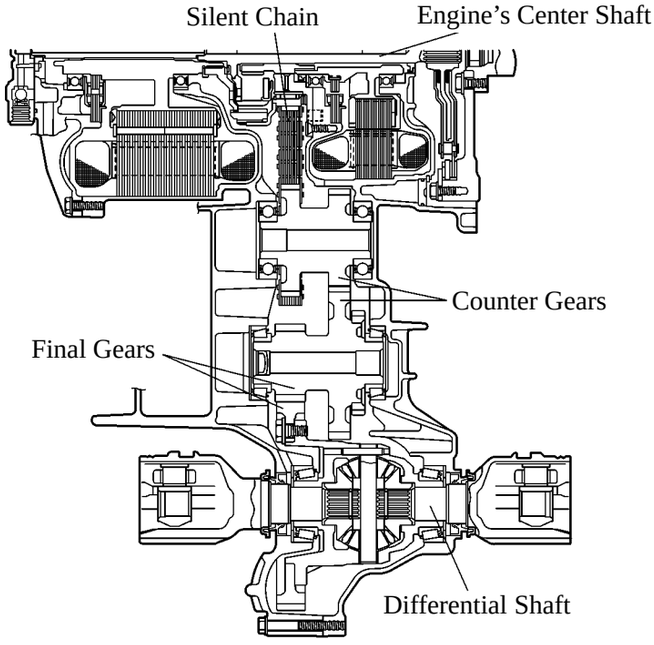

182CH21

■ DIFFERENTIAL UNIT

For the differential unit, a 2-pinion type that is similar to the differential unit of the conventional transaxle has been adopted.

■ LUBRICATION SYSTEM

A force-feed lubrication system using a trocoid pump has been adopted for lubrication of the planetary gear unit and the bearings on the main shaft.
The oil pump is directly driven by the engine.
The same type of oil is used for both the reduction unit portion and the differential portion.

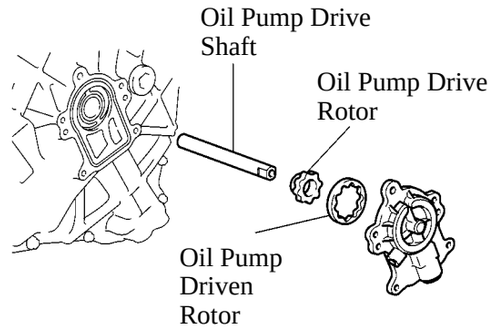

182CH22

■ PARKING LOCK MECHANISM

A mechanical parking lock mechanism has been provided in the counter driven gear.
The engagement of the parking lock pawl with the parking gear that is integrated with the counter driven gear locks the movement of the vehicle.
The direction of the parking lock pawl changes via the two link mechanisms that are connected to the outer lever through the shift cable. The longitudinal movement of the parking rod causes a vertical movement of the parking lock pawl that meshes with the parking gear.

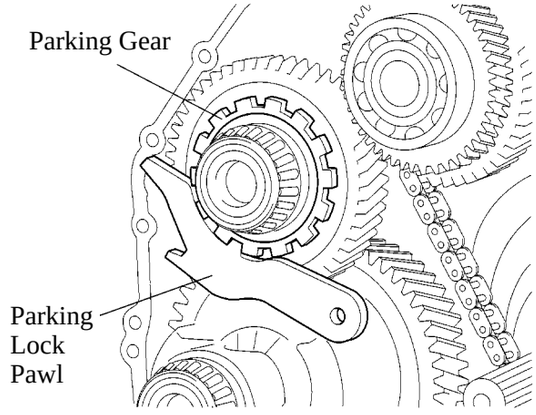

182CH23

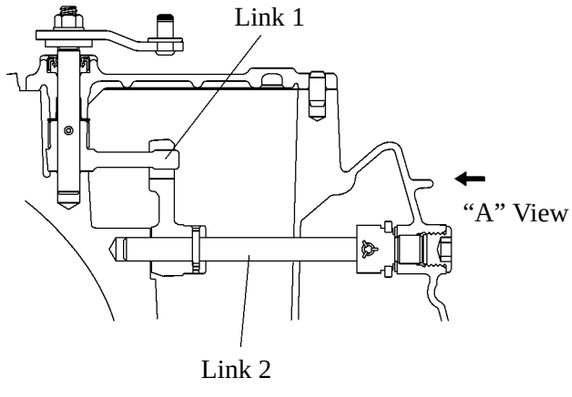

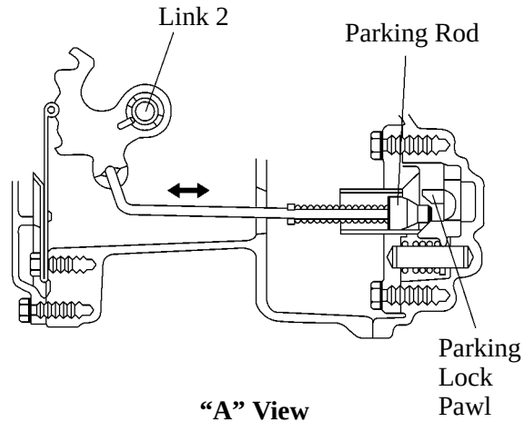

182CH24

■SHIFT CONTROL

1. Shift Lever

A column-type shift lever with 5 positions has been adopted. The shift lever is operated by moving it in the vehicle's longitudinal direction to ensure excellent ease of use. The shift lever is integrated with the shift position sensor.

2. Shift Control

For shift control, a shift-by-wire system has been adopted. This system uses electrical signals that are output by the shift position sensor to determine the shift position. For operating the parking lock pawl in the transaxle, however, a shift cable is used for attaining P position.
The shift position sensor outputs two systems of signals: the main switch signals, and the sub switch signals containing high and low voltages. When these signals match, the HV ECU determines the respective shift position.

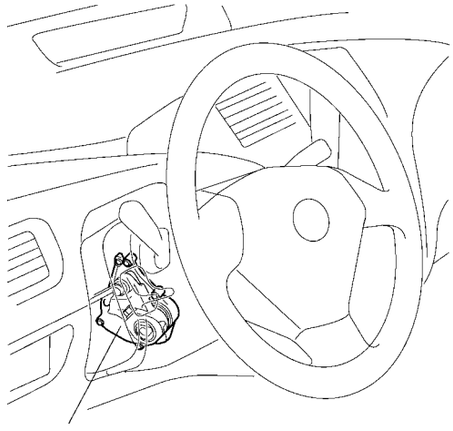

Shift Position Sensor

182CH25

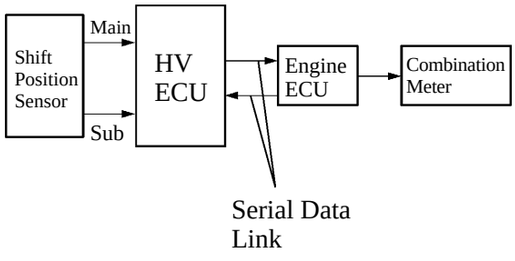

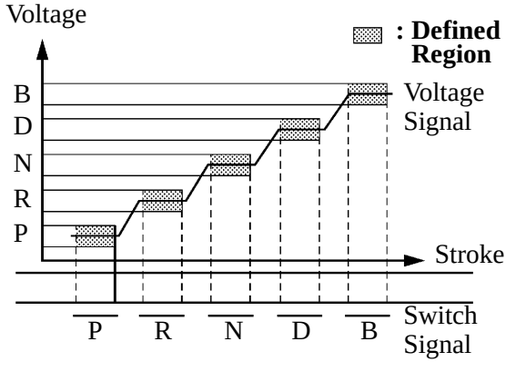

182CH26

Service Tip

Because it is extremely difficult to precisely assemble the shift position sensors, do not disassemble the shift lever.

■SHIFT LOCK SYSTEM

1. General

A shift lock system that help prevent the unintended operation of the shift lever has been provided. The shift lock system consists of a key interlock device and shift lock mechanism.

2. Layout of Components

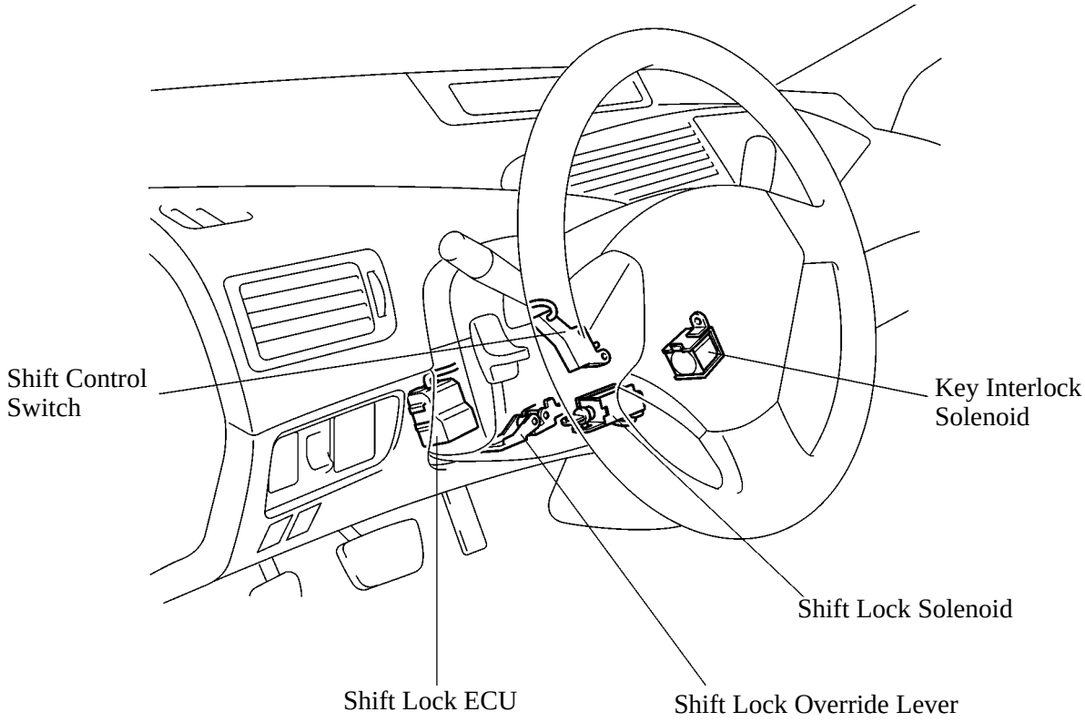

3. Function of Components

Components	Function
P Position Detection Switch	Detects whether or not the shift lever is in P position and sends signals to the shift lock ECU.
Key Interlock Solenoid	Regulates the movement of the ignition key cylinder.
Shift Lock Solenoid	Regulates the operation of the shift lever at P position.
Stop Light Switch	Sends the brake signal to the shift lock ECU.
Shift Lock ECU	Receives inputs of various types of signals and regulates the operation of the two solenoids.

4. Key Interlock Device

The activation of the key interlock solenoid that is mounted on the upper column bracket moves the lock pin to restrict the movement of the key cylinder.
Therefore, if the shift lever is shifted to any position other than “P”, the ignition key cannot be moved from “ACC” to the “LOCK” position.

5. Shift Lock Mechanism

The shift lock mechanism prevents the shift lever from being shifted out of the “P” position to any other position unless the ignition switch is turned ON and the brake pedal is pressed.
A shift lock override lever, which manually overrides the shift lock mechanism, is provided.

DRIVE SHAFT

■ DESCRIPTION

- A tripod type CVJ (Constant Velocity Joint) is used on the differential side, and Rzeppa type CVJ is used on the front axle side.
- A dynamic damper has been provided on the right driveshaft to reduce vibration and noise.

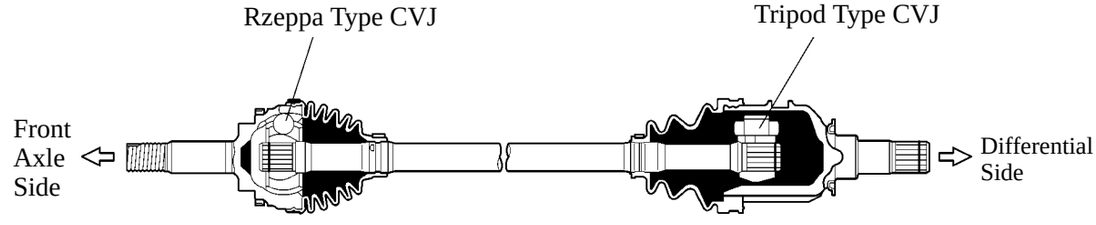

Left Side

182CH27

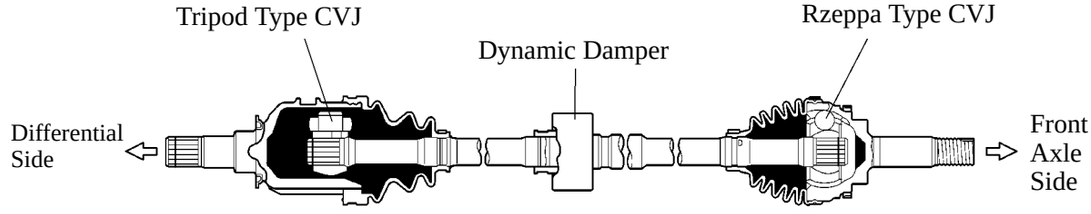

Right Side

182CH28

SUSPENSION AND AXLES

■SUSPENSION

1. General

- MacPherson strut type suspension that uses L-shaped lower arms has been adopted for the front.
- Torsion-beam type suspension with toe control links has been adopted for the rear.
- The characteristics and the allocation of the components have been optimized to ensure excellent drivability, stability, and riding comfort.

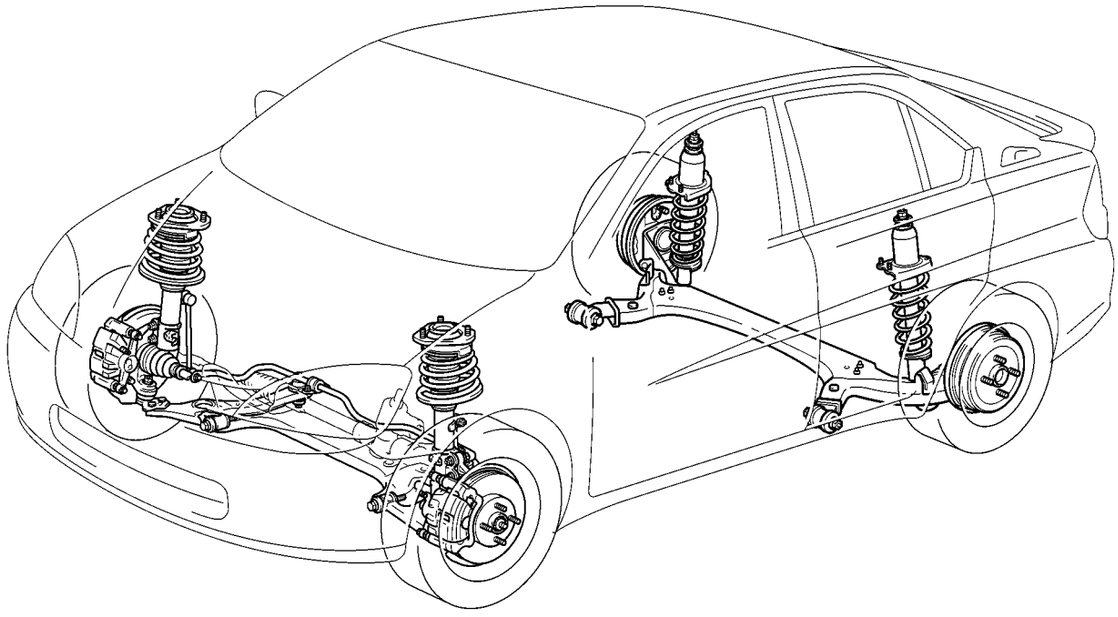

182CH29

▶ Specifications ◀

Item		Front	Rear
Tread	mm (in.)	1480 (58.3)	1478 (58.2)
Caster*	degrees	1°02’	—
Camber*	degrees	−0°26’	−1°30’
Toe-In*	mm (in.)	1 (0.04)	1 (0.04)
King Pin Inclination*	degrees	9°52’	—

*: Unloaded Vehicle Condition

2. Front Suspension

General

A MacPherson strut type independent suspension with an L-shaped lower arm has been adopted. Through the optimal allocation of components, and the adoption of the nachlauf geometry, negative camber, and anti-dive geometry, the front suspension realizes excellent riding comfort, stability, and controllability.

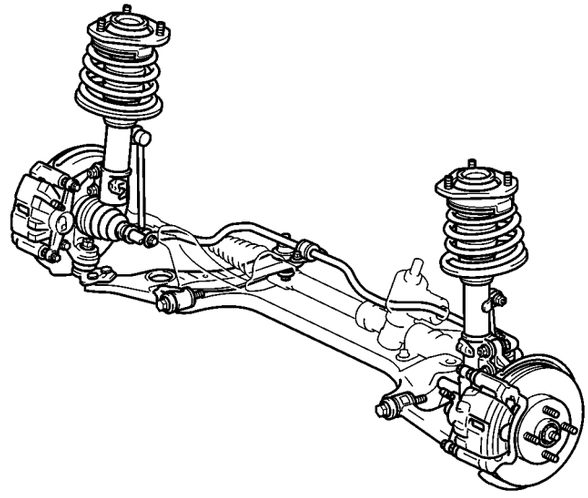

182CH30

Nachlauf Geometry

The front suspension adopts the nachlauf geometry in which the king pin axis is located ahead of the axle center.
As a result, excellent straightline stability has been realized and the steering feeling has been improved.

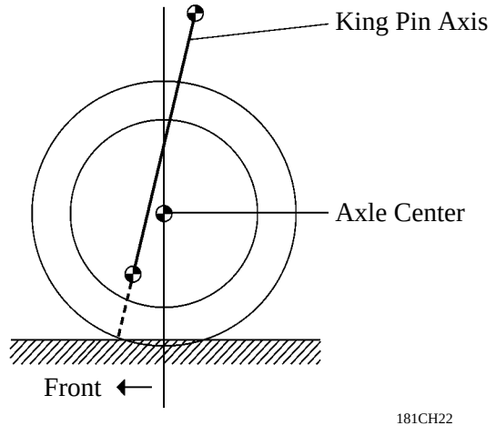

181CH22

Negative Camber

The front suspension adopts negative camber to reduce the ground contact camber angle of the outer wheel at the time of turning (cornering), which is caused when the vehicle posture changes during cornering, thus realizing excellent cornering performance.

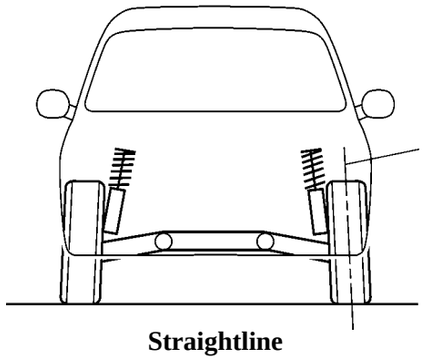

Straightline

181CH23

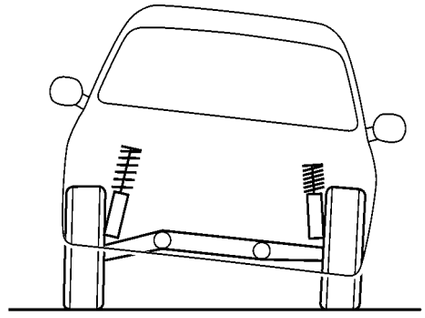

Cornering

181CH24

Suspension Upper Support and Dust Cover

- The upper support optimizes the characteristics of the rubber mount. Also, a rebound stopper has been provided to ensure riding comfort, drivability, and stability.
- A bound stopper made of urethane has been adopted. By optimizing the stopper characteristics and the clearance, excellent riding comfort and a high level of roll rigidity have been achieved.
- An upper insulator that is integrated with the dust boot has been adopted.

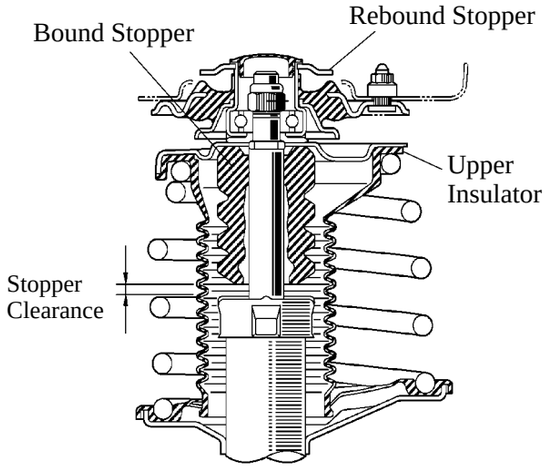

182CH31

Shock Absorber

- Low-pressure (N_2) gas sealed shock absorbers that offer stable dampening force characteristics without causing cavitation have been adopted.
- The dampening force characteristics of the shock absorbers have been optimized to achieve excellent riding comfort, drivability, and stability.

Lower Arm

- An L-shaped stamped lower arm has been adopted.
- Rubber bushings have been adopted, and the mounting position and the construction of the lower arm have been optimized to improve the steering feel.

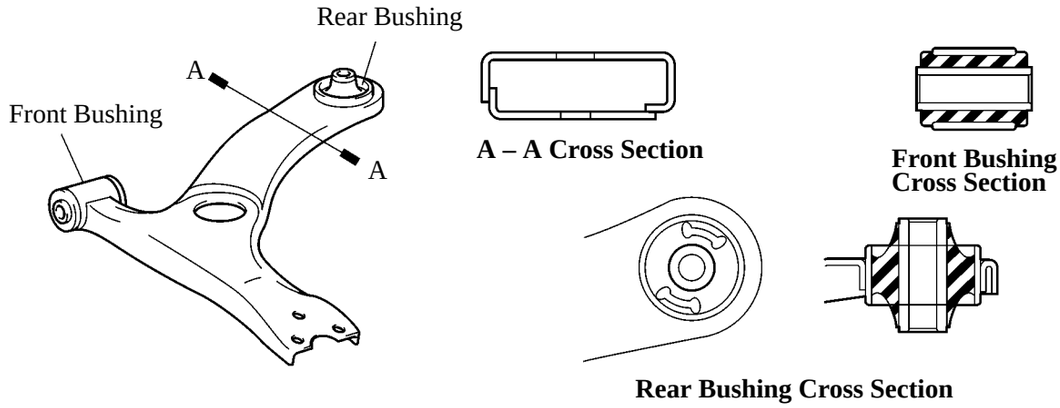

182CH32

Stabilizer Bar

A ball-joint type stabilizer link has been adopted. Also, by mounting the stabilizer link to the shock absorber, the excellent stabilizing efficiency has been provided while realizing both steering stability and riding comfort.

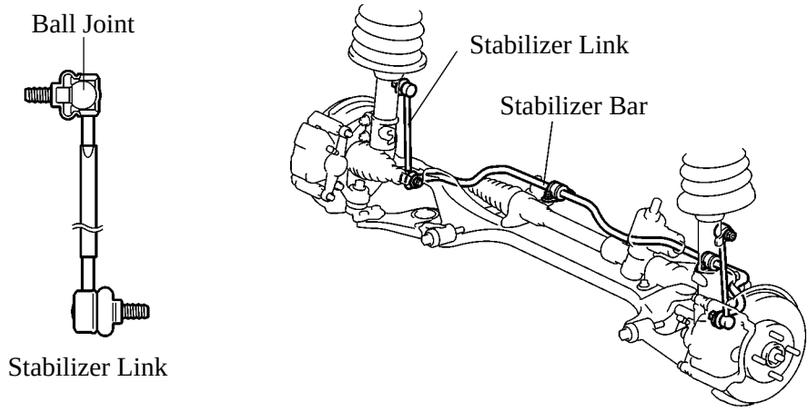

182CH33

3. Rear Suspension

General

- A torsion beam type suspension with toe control links has been adopted, in which an axle beam is located in the middle of the trailing arm.
- The torsion beam type rear suspension minimizing change in the tire-to-road camber during cornering, thus delivering good cornering stability and driving stability.
- The stabilizer bar has been adopted to realize excellent drivability and stability.
- A toe control link mechanism has been adopted in the construction of the trailing arm bushings. The toe-correct function that is effected by the movement of the links results in optimal compliance steering, thus achieving excellent drivability, stability, and riding comfort at high levels.

NOTICE

Be sure to use the jack-up points that are provided on the body when raising the vehicle on a jack. Never apply a jack under the axle beam, training arm, or the bushing of the rear suspension.

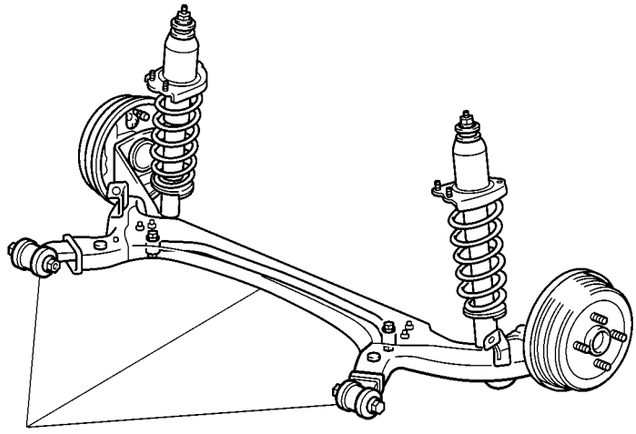

Never use these areas
as jack-up points.

182CH34

Trailing Arm and Axle Beam

- Trailing arms that are lightweight, highly rigid, hollow inside, and a gently curved axle beam with a rear-open U-shaped cross section have been adopted.
- A toe control links integrated axle beam has been adopted. The toe control link consists of the No.1, No.2, and No.3 trailing arm bushings, and it rotates within the horizontal plane of the vehicle, around the No.3 bushing that serves as the axial center.
- The rolling regidity has been optimized through the adoption of the stabilizer bar.

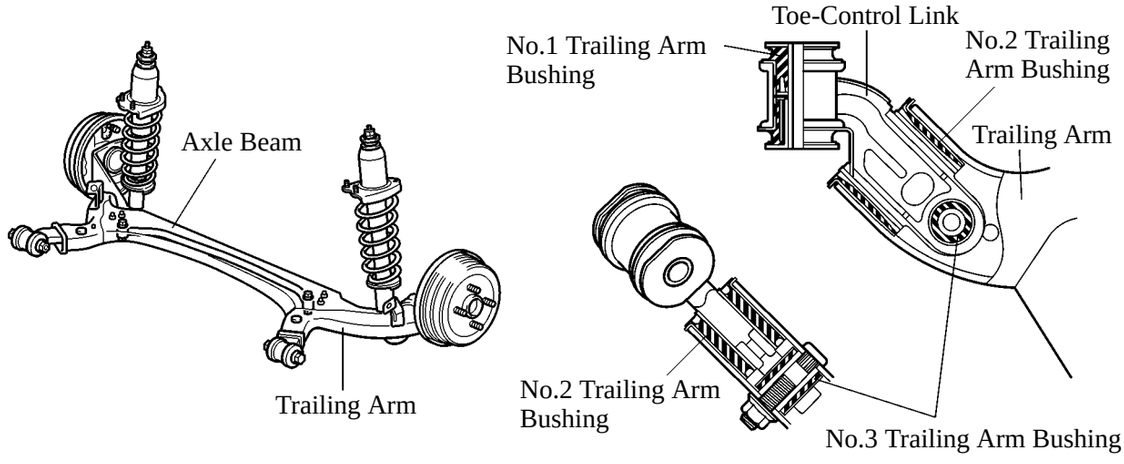

182CH35

Toe-Correct Function

The longitudinal and lateral forces that are created in the vehicle during cornering causes the toe control links in the trailing arms to become deformed.
On a right turn, the right trailing arm moves forward and the left trailing arm moves rearward, creating a tendency for the left wheel to toe out.
In this situation, the toe control links that are installed in the trailing arms are designed to utilize the lateral force, which is applied to the toe control links during cornering, to correct the left trailing arm towards the toe-in direction.
As a result, excellent stability and controllability are realized.

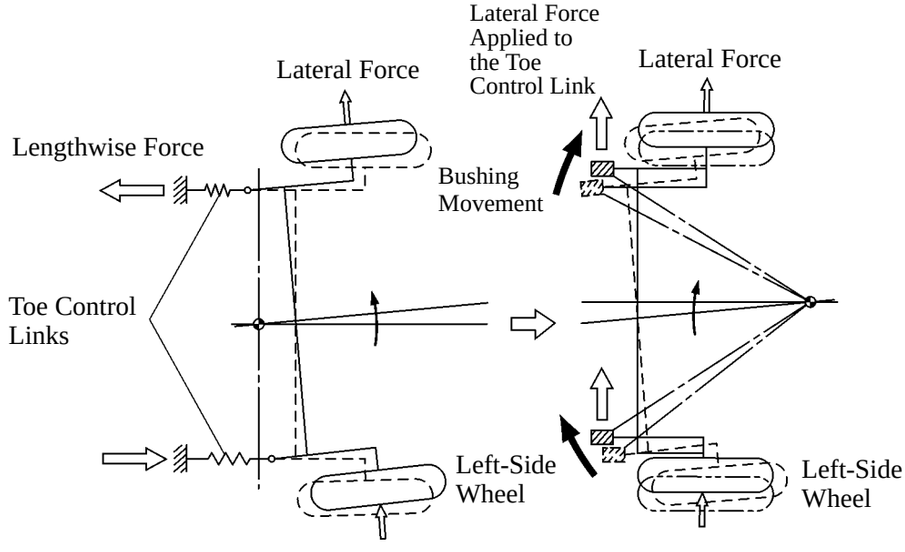

181CH35

Toe and Camber Change

In the torsion beam type suspension, the camber angle and the toe change differ between the same direction stroke case and the opposite direction stroke case, offering both straightline stability and excellent cornering stability.

1) Same Direction Stroke Case

Similar to the full-trailing arm type suspension, the axis that joins the center of the right and left trailing arm bushings is the center of the movement.

2) Opposite Direction Stroke Case

During opposite direction stroke case, or if a difference in suspension travel is created between the right and left wheels, the torsion beam twists with its shearing center as the center of its rotation.
Also, camber changes in relation to the suspension travel are determined by the ratio of the distance between the No.1 trailing arm bushing and the axle center and the shearing center (‘α’ in the Fig. below) and distance between the No.1 trailing arm bushing and the axle beam (‘L’ in the Fig. below).
Consequently, through the optimal allocation of the axle beam, the changes in the camber angle in relation to the suspension travel have been optimized, thus ensuring excellent cornering performance.

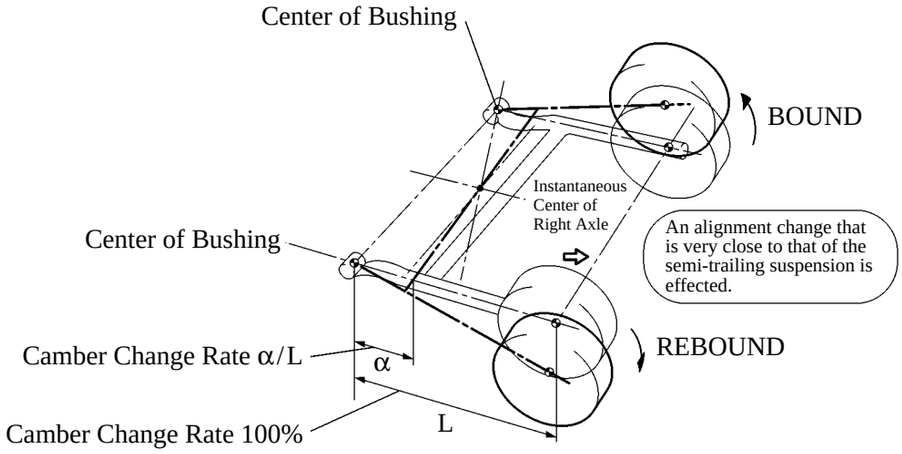

165CH48

Shock Absorber

- Low-pressure (N_2) gas sealed shock absorbers that offer stable dampening force characteristics without causing cavitation have been adopted.
- The dampening force characteristics of the shock absorbers have been optimized to achieve excellent riding comfort, drivability, and stability.

■AXLES

1. Front Axle

- The front axle use a double-row angular ball bearing which offers low rolling resistance.
- A lock nut (12-point) has been adopted and staked for tightening the axle hub in order to ensure the tightening performance. This nut cannot be reused.

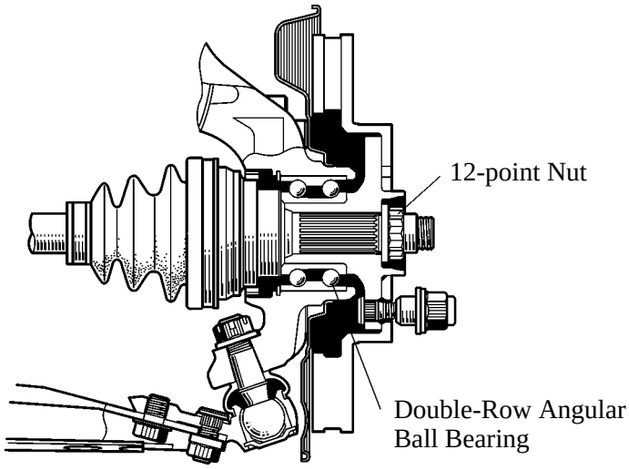

182CH36

2. Rear Axle

- The rear axle use a double-row angular ball bearing which offers low rolling resistance.
- ABS speed sensor and rotor are built in the axle bearing.

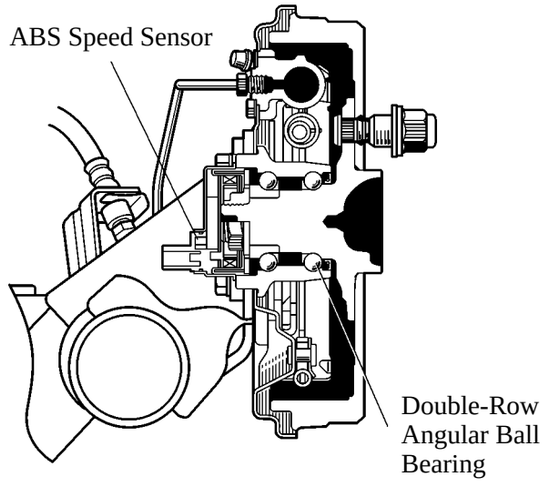

182CH37

BRAKES

■DESCRIPTION

- The front brakes use ventilated disc brakes and the rear brakes use leading-trailing drum brakes.
- To adjust the clearance between the shoes and drum, the rear drum brakes uses the incremental type hydraulic auto adjuster.
- On the Prius uses a pedal type parking brake that is released by pressing the pedal further.
- A hydraulic brake booster in which the master cylinder and booster are integrated has been adopted.
- The Prius has adopted the ABS with EBD (Electronic Brake force Distribution) as a standard equipment.
- A regenerative brake system, which uses the MG2 that is used for driving the vehicle as a generator to efficiently convert the energy that is created during braking has been adopted. This system enables to collect more driving energy by having the control to cooperate the hydraulic brake and the regenerative brake.

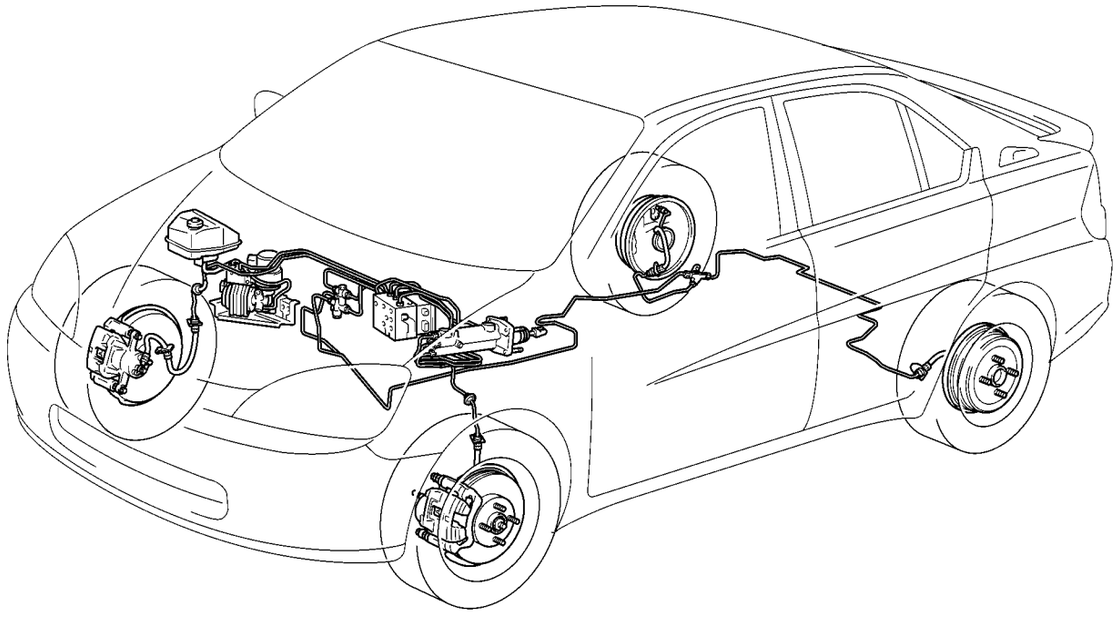

182CH38

▶ Specifications ◀

Master Cylinder	Type		Single
	Diameter	mm (in.)	22.22 (0.87)
Brake Booster Type			Hydraulic
Front Brake	Type		Ventilated Disc
	Caliper Type		PE54
	Wheel Cylinder Dia.	mm (in.)	54.0 (2.13)
	Rotor Size (D x T)*	mm (in.)	255 x 22 (10.04 x 0.87)
Rear Brake	Type		Leading-Trailing Drum
	Wheel Cylinder Dia.	mm (in.)	20.64 (0.81)
	Drum Inner Dia.	mm (in.)	200 (7.87)
Brake Control Valve Type			P & B Valve
Parking Brake	Type		Drum
	Size	mm (in.)	200 (7.87)
	Lever Type		Pedal
ABS with EBD			STD

*: D: Outer Diameter, T: Thickness

■FRONT BRAKE

The PE54 type brake calipers and ventilated disc rotor have been adopted. These brake calipers are lightweight and compact to realize excellent brake performance.

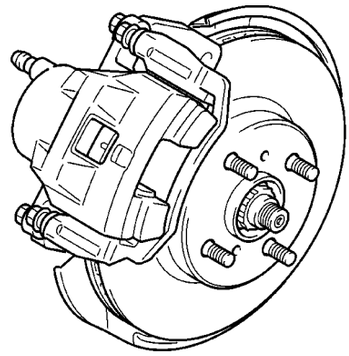

182CH39

■REAR BRAKE

General

- The leading-trailing type drum brakes using drums with a 200 mm (7.87 in.) inner diameter have been adopted.
- A hydraulic system that adjusts the clearance between the shoes and the drum has been adopted.

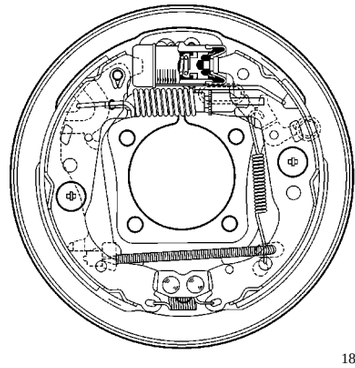

182CH40

Incremental Type Hydraulic Auto Adjuster

Ordinarily, when the rear brakes are applied, the shoes expand until they come in contact with the inner surface of the drum.
While the auto adjust lever remains in contact with point A of the strut, the spring force causes the auto adjust lever to rotate in direction C, with adjust lever point B as the fulcrum. At this time, if the shoe clearance exceeds a predetermined amount, the tip of the auto adjust lever rotates the adjusting bolt in direction D by 1 tooth, causing the strut to move for a predetermined amount towards the direction that expands the shoes. As a result, by pushing and expanding the initial position of the shoes, an appropriate amount of clearance is maintained between the shoes and the drum.

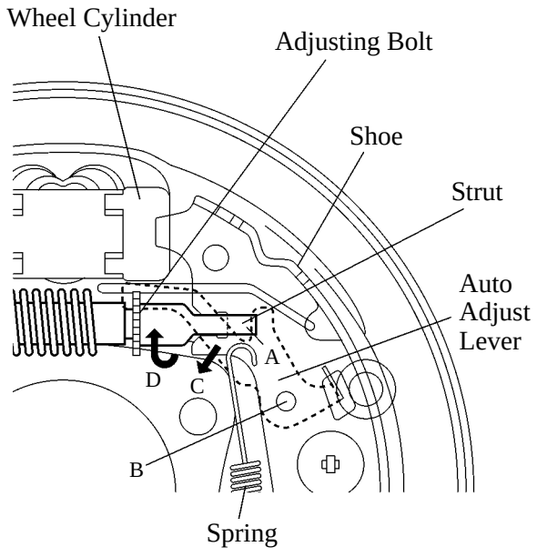

165CH33

■PARKING BRAKE

1. General

On the Prius uses a pedal type parking brake that is released by pressing the pedal further.

2. Construction

A pedal type parking brake pedal consists mainly of a parking brake pedal, sector, pawl, release intermediate lever, pawl spring and pedal return spring.
The parking brake pedal and sector are integrated, and parking brake cable is attached to the parking brake pedal.
The pawl and the release intermediate lever are linked by the pawl spring and operate together along with the movement of the pedal.

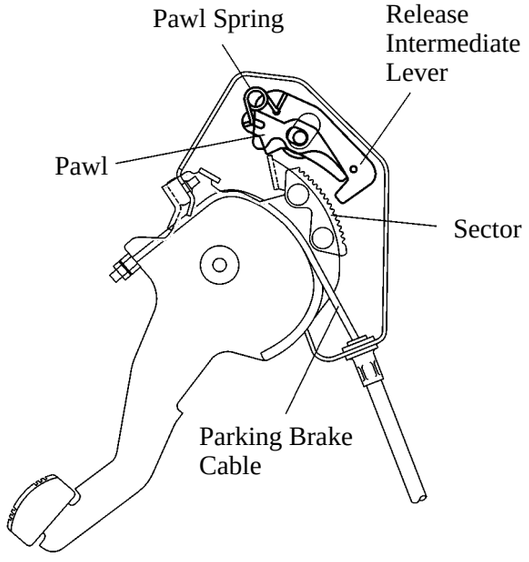

182CH41

3. Operation

During Applying

Pressing the parking brake pedal causes the sector's rachet to engage with the pawl. Then, when the pressure on the brake pedal is released, the reaction force of the parking brake cable and the force of the pedal return spring cause the pawl and sector, which remain engaged, to return (only for the stroke). As the result, the parking brake becomes locked.
At this time, because the relative installed position of the pawl spring changes, the force of the pawl spring that was applied to the intermediate release lever switches its direction and now pushes the intermediate release lever down.

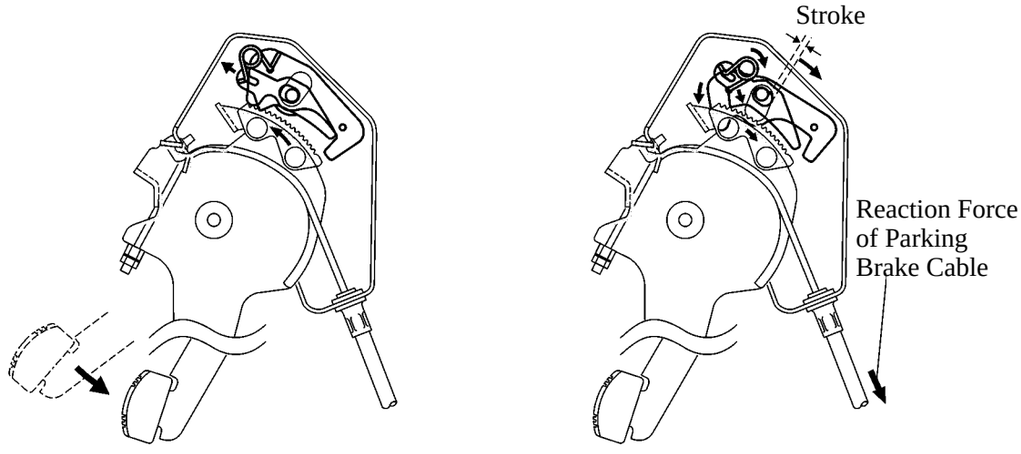

While Pressing **Locked State**

182CH42

During Releasing

When the parking brake pedal is pressed again, as the reaction force of the parking brake cable and the force of the pedal return spring will not be applied to the pawl, the action of the pawl spring causes the pawl to lift. As a result, the pawl is released from the sector's ratchet.
Next, when the parking brake pedal returns to its initial point, the lift portion of the parking brake pedal causes the intermediate release lever to lift. The pawl is then pushed down by the force of the pawl spring and returns to its initial state.

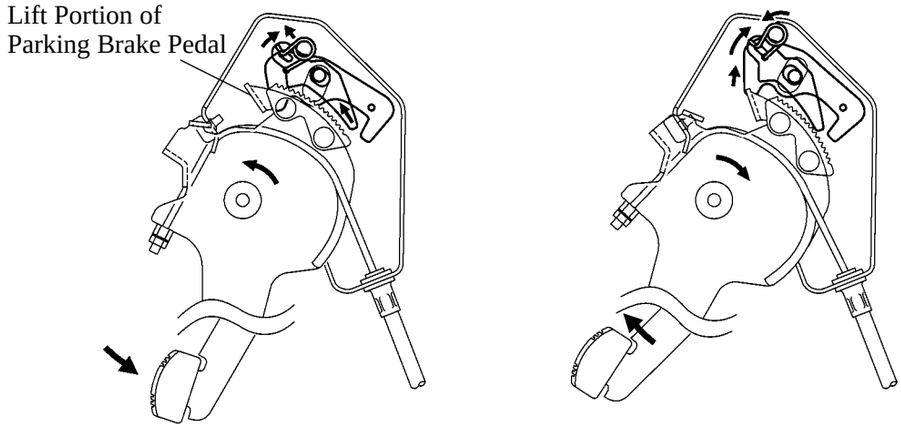

Press Again **During Pedal Return**

182CH43

■BRAKE SYSTEM

1. General

- A brake system, which uses brake fluid that is stored under high pressure to assist the brake pedal effort and to operate the ABS with EBD control and the regenerative brake cooperative control, has been adopted.
- A regenerative brake system, which uses the MG2 that is used for driving the vehicle as a generator to efficiently convert the energy that is created during braking, has been adopted. This system enables to collect more driving energy by having the control to cooperate the hydraulic brake and the regenerative brake.

2. System Diagram

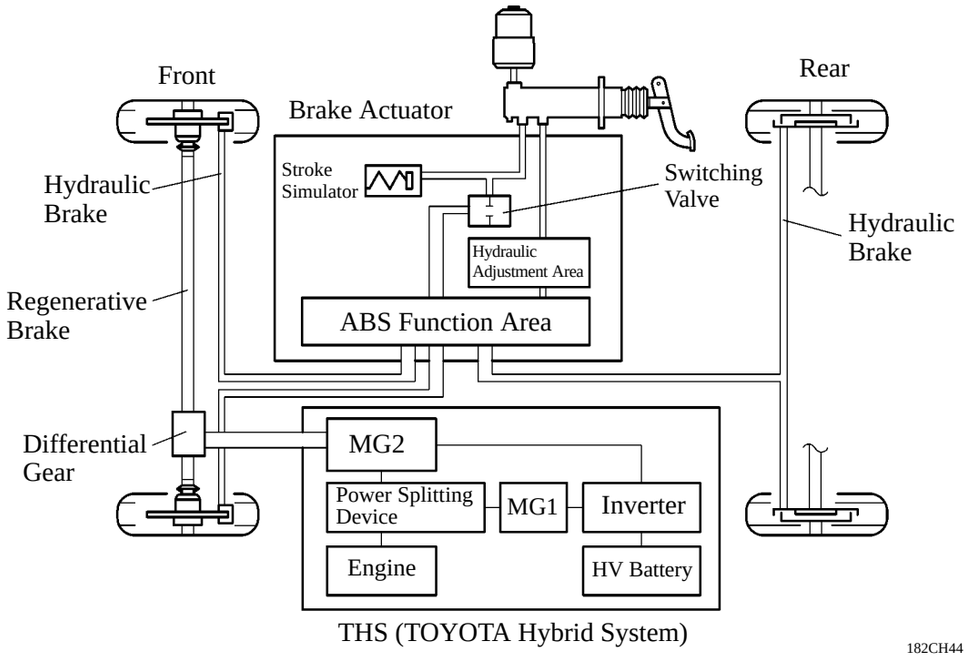

THS (TOYOTA Hybrid System)

182CH44

3. Layout of Main Components

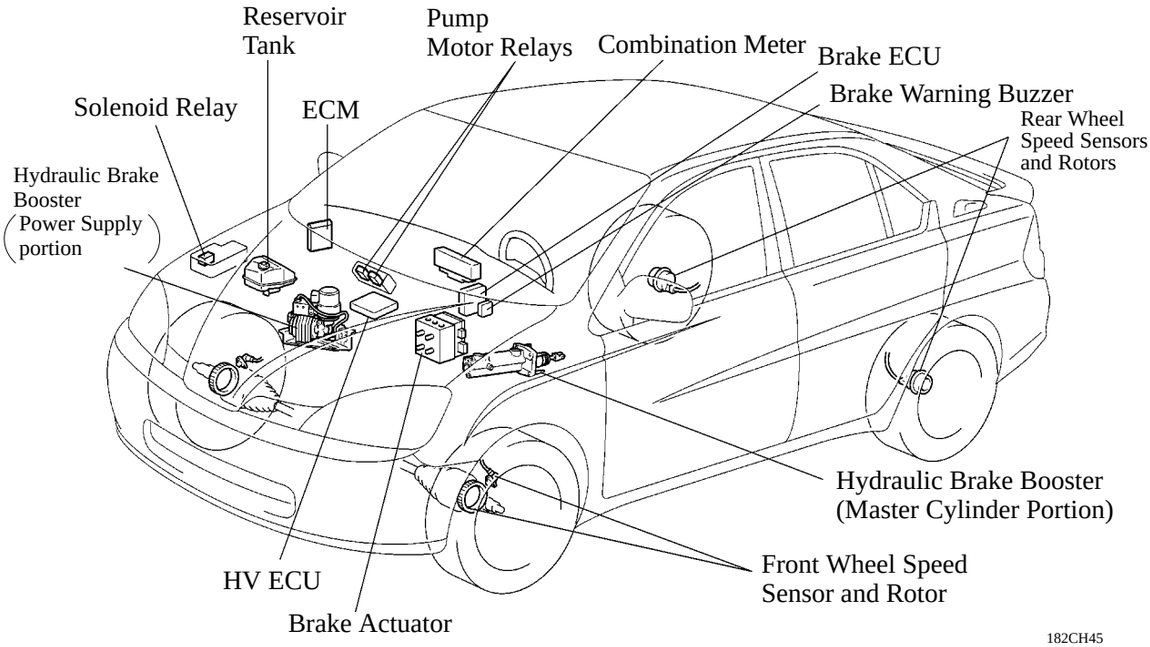

182CH45

4. Function of Main Components

Components		Function
Combination Meter	ABS Warning Light	Lights up to alert the driver when the brake ECU detects the malfunction in the ABS.
	Brake System Warning Light	● Lights up together with the ABS warning light to alert the driver when the brake ECU detects the malfunction not only in the ABS but also in the EBD control. ● Lights up to alert the driver when the malfunction occurs in the brake system.
Stop Light Switch		Detects the brake depressing signal.
Brake Warning Buzzer		Emits a continuous sound to inform the driver that the ABS ECU detects the malfunction in the hydraulic brake booster.
Speed Sensors		Detect the wheel speed of each of the four wheels.
Brake ECU		● Processes various sensor signals, regenerative brake signals, to execute control of the ABS control, EBD control, regenerative coordination control and hydraulic brake booster. ● Communicates control data with the HV ECU.
HV ECU		Maintains serial communication with the brake ECU to exchange regenerative coordination control signals.
Hydraulic Brake Booster		● Assists with the pedal effort applied to the brake pedal. ● Supplies hydraulic pressure.
Brake Actuator		Controls the brake fluid pressure to each brake wheel cylinder by signals from the brake ECU.
Solenoid Relay		Supplies power to the ABS's solenoid valve's in the brake actuator.
Pump Motor Relays		Control the pump motor operation in the hydraulic brake booster.

5. Hydraulic Circuit

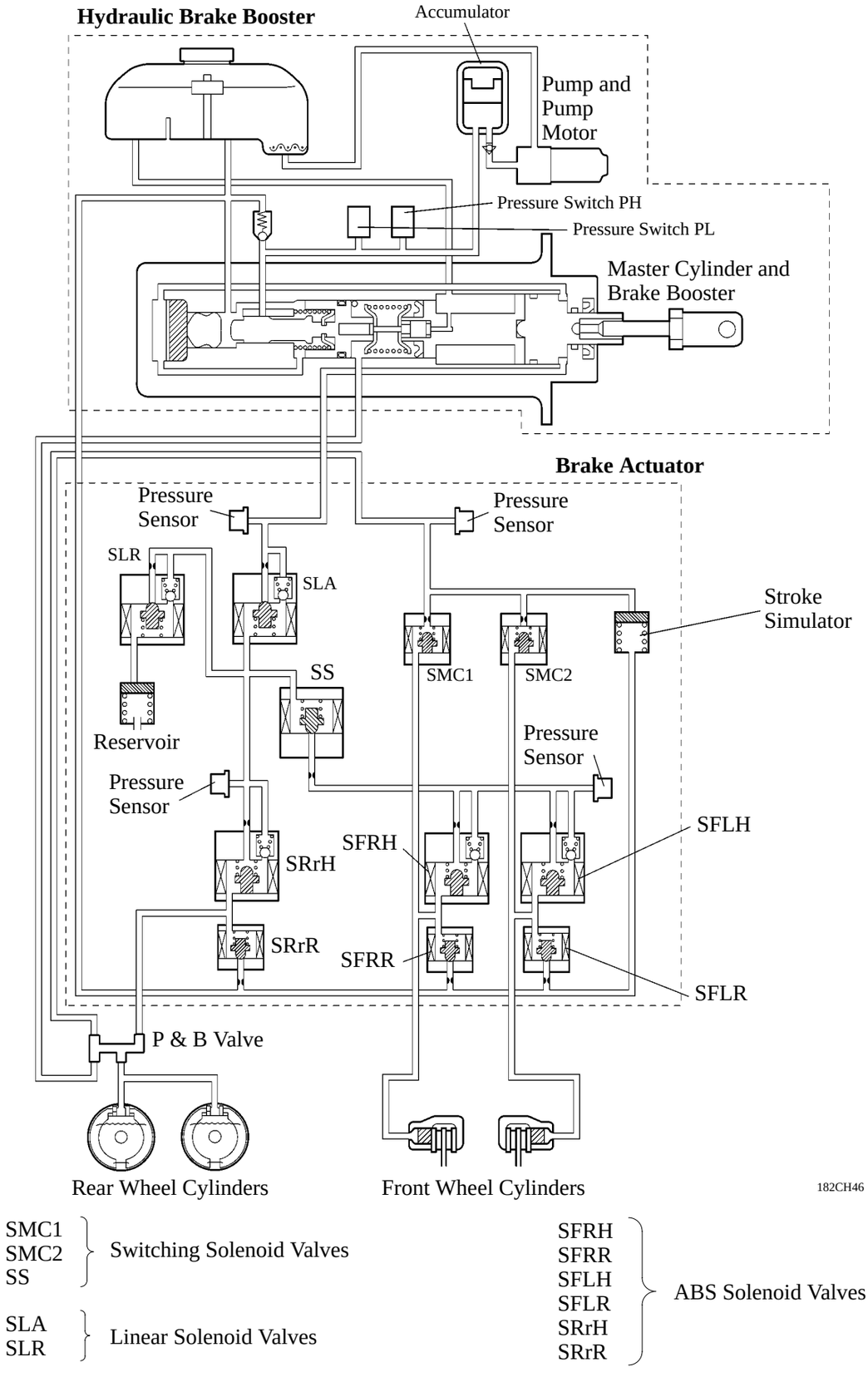

SMC1, SMC2, SS — Switching Solenoid Valves

SLA, SLR — Linear Solenoid Valves

SFRH, SFRR, SFLH, SFLR, SRrH, SRrR — ABS Solenoid Valves

6. Construction and Operation

The brake system of Prius consists of the following components:

Components			Function
Hydraulic Brake Booster	Power Supply Portion	Pump and Pump Motor	Draws up the brake fluid from the reservoir tank and provides high hydraulic pressure to the accumulator.
		Accumulator	Stores the hydraulic pressure that was generated by the pump. The accumulator is filled with highpressure nitrogen gas.
		Pressure Switches	Monitors the hydraulic pressure of the accumulator and outputs control signals for the pump motor. There are two types: the pressure switch PH for controlling the pump, and the pressure switch PL for giving a warning when the pressure is low.
		Relief Valve	Returns the brake fluid to the reservoir tank to prevent excessive pressure if the pump operates continuously due to a malfunction of the pressure switch.
		Reservoir Tank	Stores the brake fluid.
		Brake Fluid Level Warning Switch	Detects the low brake fluid level.
	Master Cylinder Portion	Master Cylinder	Generates the hydraulic pressure in accordance with the pedal effort that is applied to the brake pedal.
		Brake Booster	Regulates the accumulator pressure in accordance with the pedal effort that is applied to the brake pedal and introduces this pressure to the booster chamber in order to provide a power assist to the brakes.
Brake Actuator		Pressure Sensors	Detects the pressure of the master cylinder, regulator, and front and rear wheel cylinders.
		Switching Solenoid Valves	Switches the hydraulic path between normal braking and braking under control.
		ABS Control Solenoid Valves (Pressure Holding Valves, Pressure Reduction Valves)	Controls the hydraulic pressure that is applied to the wheel cylinders during ABS control or EBD control.
		Linear Solenoid Valve	Regulates the hydraulic pressure to the wheel cylinders during braking in accordance with the fluctuations in the regenerative brake force.
		Reservoir	Temporarily stores the brake fluid when regulating the hydraulic pressure to the wheel cylinders in accordance with the fluctuations in the regenerative brake force.
		Stroke Simulator	Generates a pedal stroke during braking in accordance with the driver’s pedal effort.

Hydraulic Brake Booster

1) General

Due to installation space constraints, a type of hydraulic brake booster that comprises two separate portions has been adopted: the power supply portion (pump, pump motor, accumulator, pressure switches, and relief valve) and the master cylinder portion.
Consisting of an pump and pump motor, accumulator, and hydraulic pressure switches, the hydraulic brake booster performs the functions of both the booster and the master cylinder.
By optimizing the hydraulic circuits, the hydraulic pressure that is generated by the booster is applied directly to the rear brakes. Thus, the hydraulic pressure from the master cylinder is used exclusively by the front brakes.

2) Pump and Pump Motor, Accumulator, Pressure Switches and Relief Valve

If the accumulator pressure becomes lower than the pressure that is specified in the pressure switch PH, which is used for detecting high pressure, the pressure switch PH turns OFF. Then, the brake ECU turns ON the pump motor relays to operate the pump motor and the pump.
The brake fluid that is discharged by the pump passes through the check valve and is stored in the accumulator. The hydraulic pressure that is stored in the accumulator is used for providing the hydraulic pressure that is needed for normal braking, for operating the ABS, and for operating the EBD control, and for regenerative brake cooperative controlling.
If the accumulator pressure becomes higher than the pressure that is specified in the pressure switch PH, the pressure switch PH turns ON. Then, after several seconds, the brake ECU turns OFF the pump.
At this time, if the pressure switch PH malfunctions and causes the pump to operate continuously, the relief valve opens to prevent excessive pressure from being generated.
Moreover, if the accumulator pressure becomes lower than the pressure that is specified in the pressure switch PL, which is used for detecting low pressure, the pressure switch PL turns OFF. As a result, the brake system warning light turns ON and the brake warning buzzer activates.
At this time, the ABS or EBD is prohibited from operating.

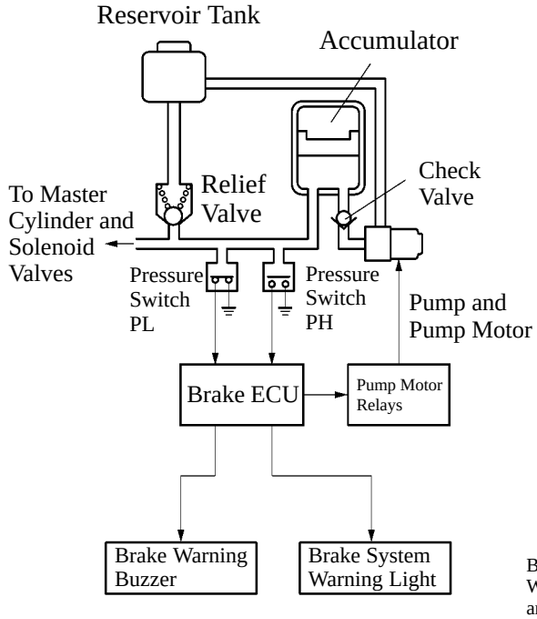

182CH47

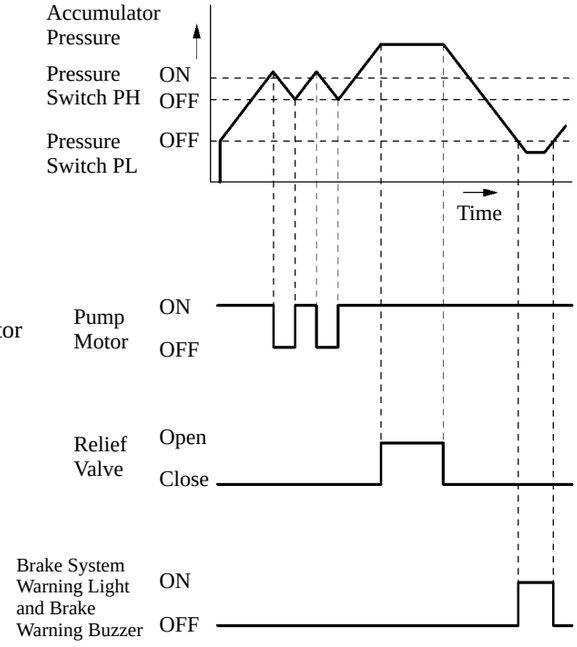

152CH17

2) Master Cylinder and Brake Booster

a. Construction

- This construction enables the hydraulic pressure that is generated by the brake booster to be applied directly to the rear brakes.
- The master cylinder is the center port type single master cylinder, which is used for the front brakes only.
- The brake booster is integrated with the master cylinder. The operating portion, master cylinder, and regulator are positioned coaxially to achieve a simple and compact construction.
- The operating rod and the power piston are linked directly to transmit the pedal effort that is applied to the brake pedal.
- The regulator and the spool valve are linked directly. A forward (leftward) force generated by the master cylinder pressure and a rearward (rightward) force generated by the power assist of the booster are applied to the regulator. Both forces maintain a balance.
- A return spring is provided for the regulator to ensure the return of the spool valve.

▶ Cross-Sectional Drawing ◀

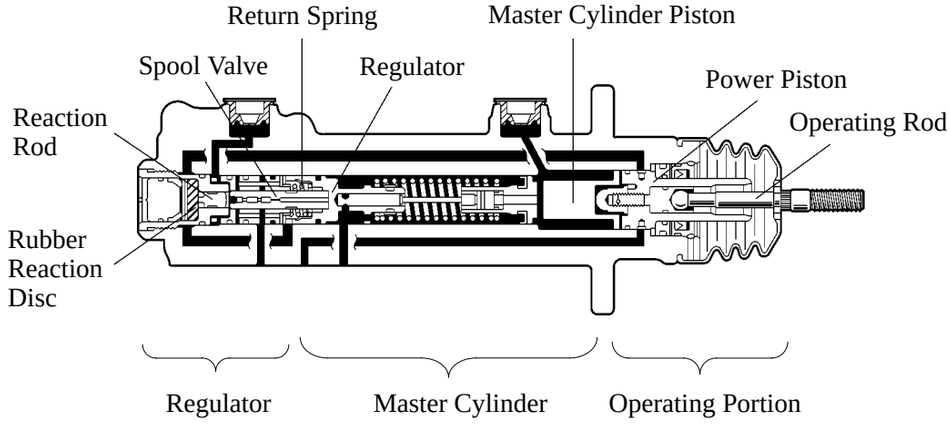

▶ Simplified Drawing ◀

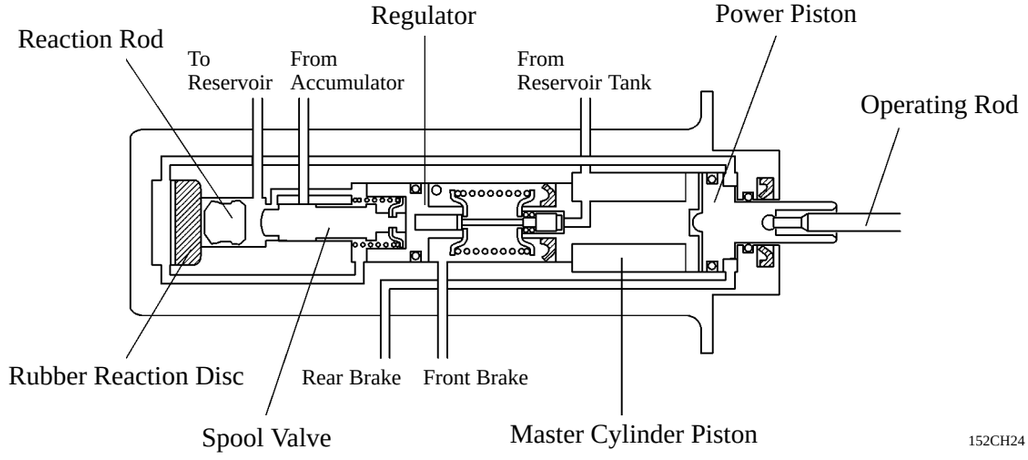

b. Operation

i) Pressure Increase (Low Pressure)

The pedal effort that is applied to the brake pedal is transmitted via the operating rod, power piston, and master cylinder piston. However, because the load setting of the master cylinder's return spring is higher than that of the regulator piston's return spring, the regulator piston gets pushed before the volume in the master cylinder becomes compressed. As a result, the spool valve moves forward.
The spool valve closes the port "A" between the reservoir and the booster chamber (behind the power piston) and opens the port "B" between the accumulator and the booster chamber. Then, the pressurized brake fluid is introduced into the booster chamber to provide a power assist to the pedal effort.
When the pressure is introduced into the booster chamber, the power assist overcomes the force of the master cylinder's return spring. This causes the volume in the master cylinder to become compressed and increases the pressure that is applied to the front brakes. At the same time, the pressure in the booster chamber increases the pressure that is applied to the rear brakes.
During the initial stage of the brake operation, the booster pressure that is applied to the rubber reaction disc is small. Therefore, a return force in the rightward direction does not apply to the spool valve via the reaction rod.

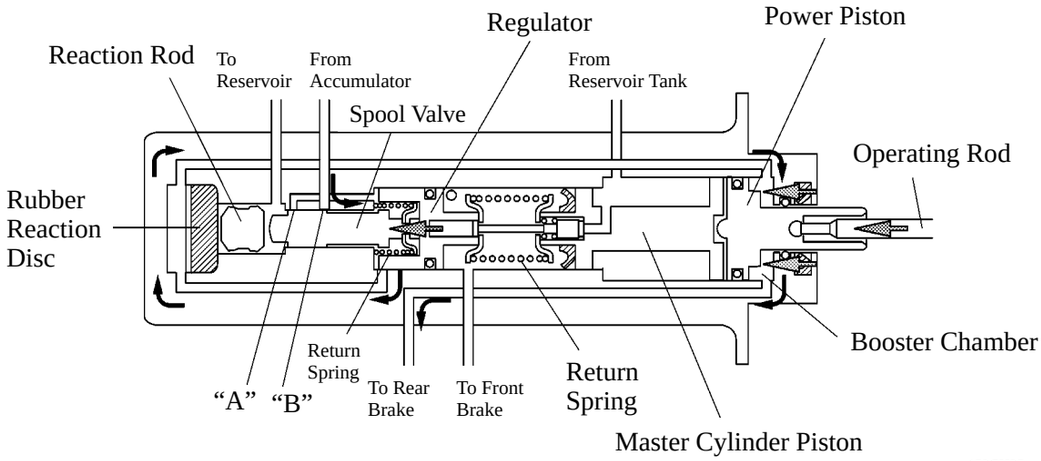

ii) Pressure Increase (High Pressure)

In contrast to the time when the pressure is low, when the pressure is high, the booster pressure that is applied to the rubber reaction disc increases. Accordingly, the rubber reaction disc deforms and causes a return force in the rightward direction to be applied to the spool valve via the reaction rod. Therefore, in contrast to the time when the pressure is low, a greater reaction force is transmitted to the brake pedal.
As a result, a variable servo mechanism is realized, in which the servo ratio is lower during high pressure than during low pressure.

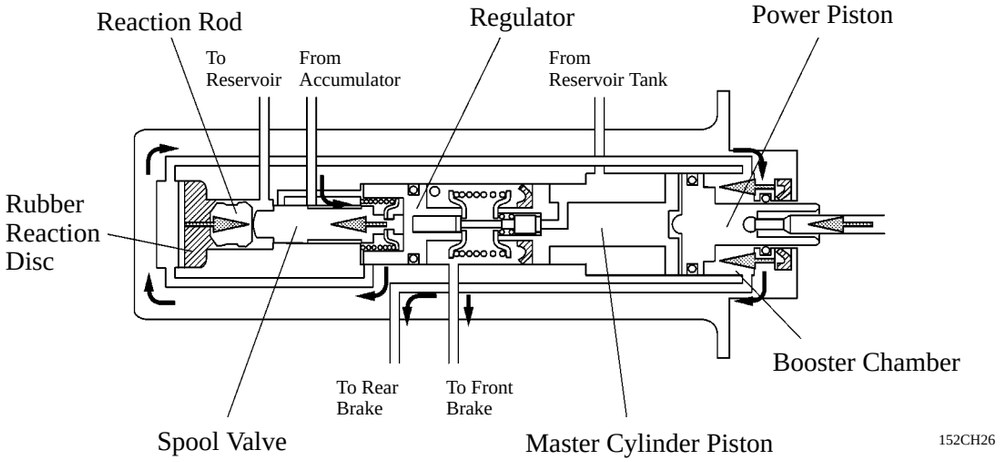

iii) Holding

This is a state in which the force that is applied via the brake pedal and the master cylinder pressure are in balance.

The forces that are applied to the front and the rear of the regulator piston, in other words, forces that are generated by the master cylinder pressure and the regulator pressure become balanced. This causes the spool valve to close both port “B” from the booster chamber to the accumulator and port “A” to the reservoir. As a result, the brake system is in the holding state.

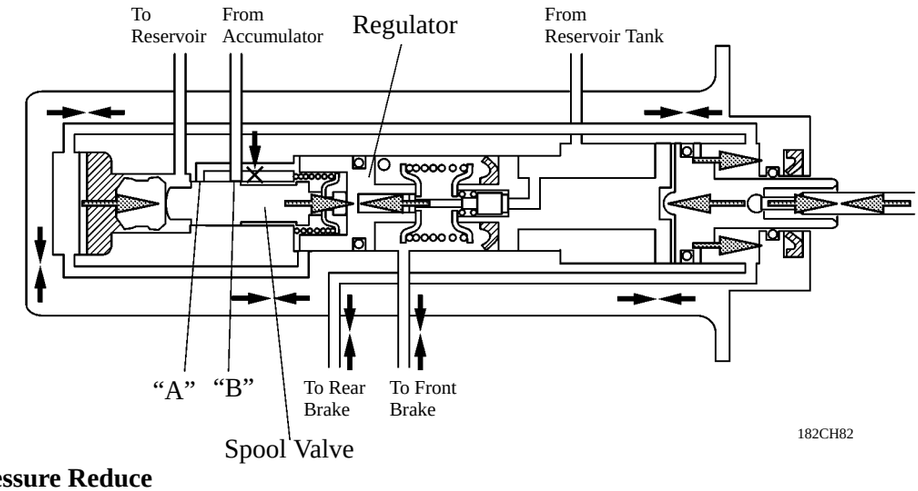

iv) Pressure Reduce

When the force that is applied to the brake pedal is relaxed, the master cylinder pressure decreases. Then, the regulator’s return (rightward) force becomes relatively greater, causing the regulator to retract and the spool valve to also retract. As a result, the port “A” between the reservoir and the booster chamber opens.

The booster pressure becomes reduced in this state, creating a balance that corresponds to the force that is newly applied via the brake pedal. This process is performed repetitively to reduce the booster pressure and the master cylinder pressure in accordance with the force that is applied via the brake pedal.

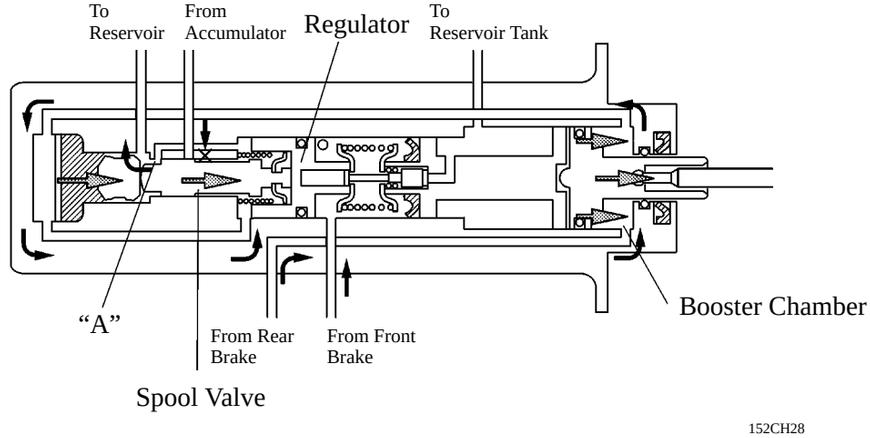

v) During Power Supply Malfunction

If the accumulator pressure is affected due to some type of malfunction, no pressure will be supplied by the regulator. Then, a power assist cannot be provided to the force that is applied via the brake pedal and the pressure to the rear brakes cannot be increased.
The pressure to the front brakes will be increased by the master cylinder in accordance with the pedal effort applied to the brake pedal.

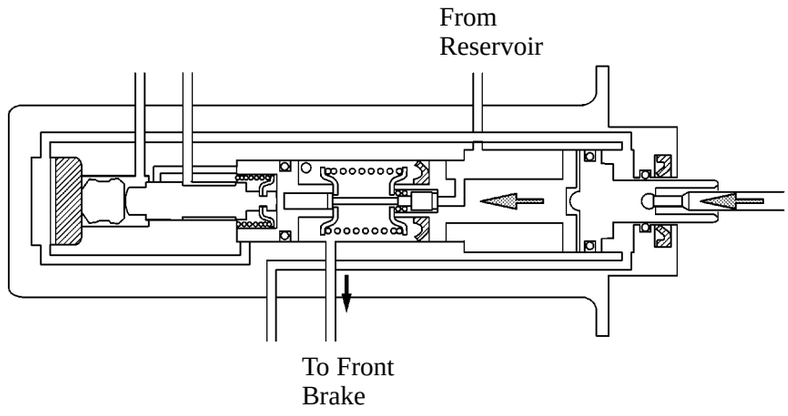

152CH29

Brake Actuator

1) Switching Solenoid Valves

The control signals from the brake ECU cause the valves to open and close to switch the passages of the brake fluid. There are 3 switching solenoid valves (SMC1, SMC2, and SS) and they switch the passages to effect conventional brake control and ABS control.

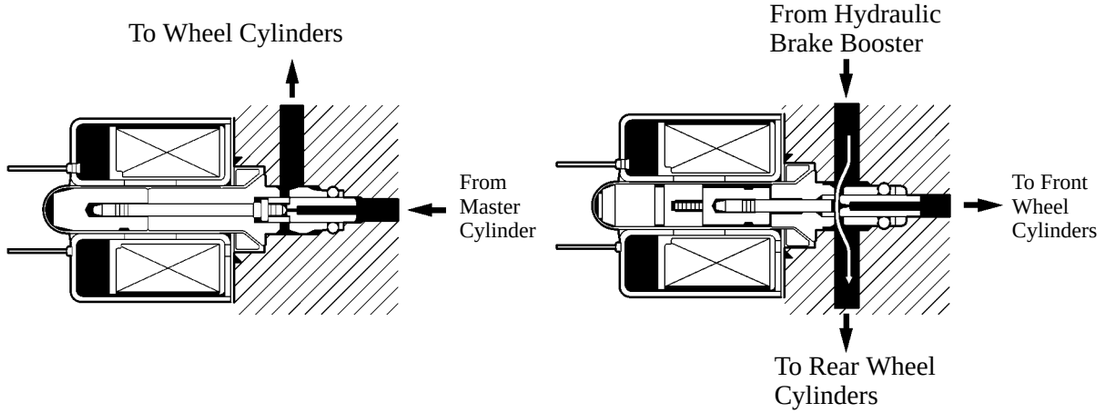

SMC1 and SMC2 **SS**

182CH49

2) ABS Solenoid Valves

The control signals from the brake ECU cause the valves to open and close to switch the passages of the brake fluid. There are 2 (pressure holding valve, pressure reduction valve) ABS solenoid valves provided. The pressure increases if no current is applied to either valve. The pressure is held if current is applied only to the pressure holding valve. The pressure decreases if current is applied to both the pressure holding valve and pressure reduction valve. To effect control independently to the front wheels, simultaneously to both rear wheels, 6 solenoid valves are provided.

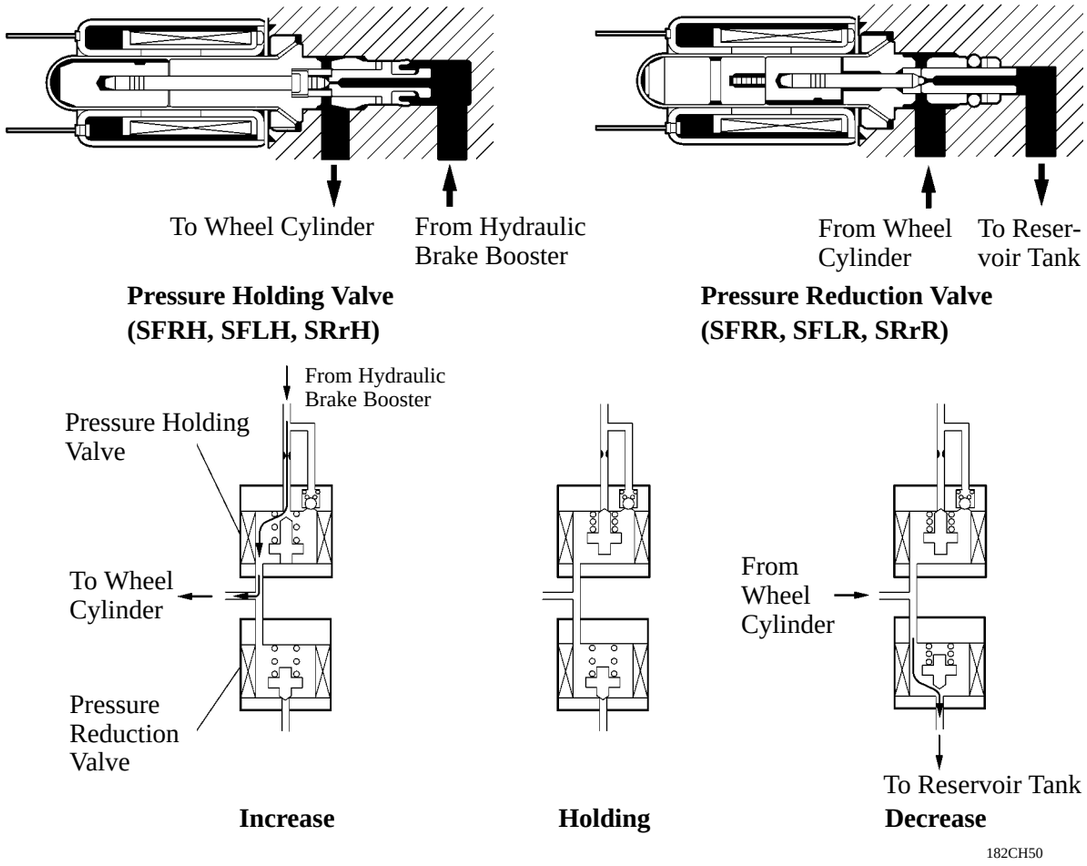

3) Linear Solenoid Valves

The control signals from the brake ECU cause the valves to open and close to regulate the volume of the brake fluid that flows into the wheel cylinders. There are 2 types of linear solenoids, the SLA for pressure increase and the SLR for pressure decrease, and they regulate the wheel cylinder pressure in accordance with the fluctuations in the regenerative brake force. In addition, the SLA contains a relief function to provide hydraulic pressure to the wheel cylinders in the event of a brake ECU failure.

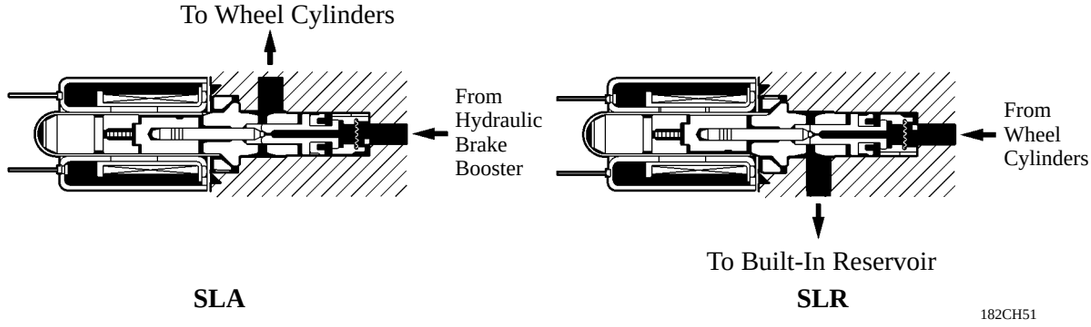

4) Stroke Simulator

The stroke simulator generates a pedal stroke in accordance with the driver's pedal effort during braking. Containing 2 types of coil springs with different spring constants, the stroke simulator provides pedal stroke characteristics in 2 stages in relation to the master cylinder pressure.

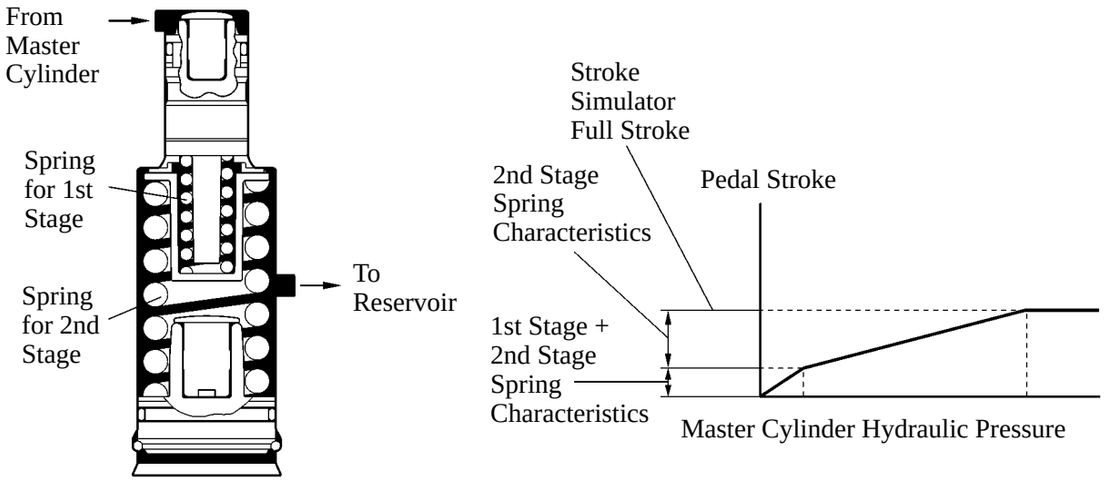

182CH52

5) Reservoir

Temporarily stores the brake fluid to absorb the pressure when regulating the wheel cylinder pressure.

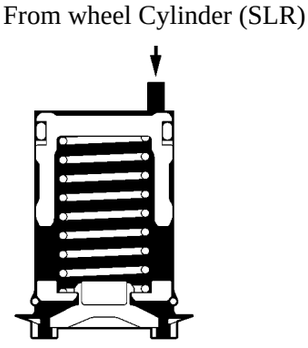

182CH53

6) Pressure Sensors

Mounted on the brake actuator, the pressure sensor linearly detects the pressure that is generated in the master cylinder, regulator, and the front and rear wheel cylinders and outputs them to brake ECU.

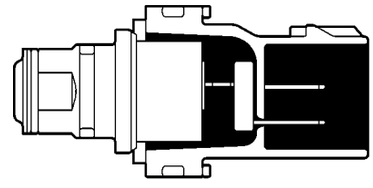

182CH54

Brake ECU

1) General

Based on the signals received from the sensors the communication it maintains with the HV ECU, the brake ECU effects conventional brake control, ABS with EBD control, and regenerative brake cooperative control.

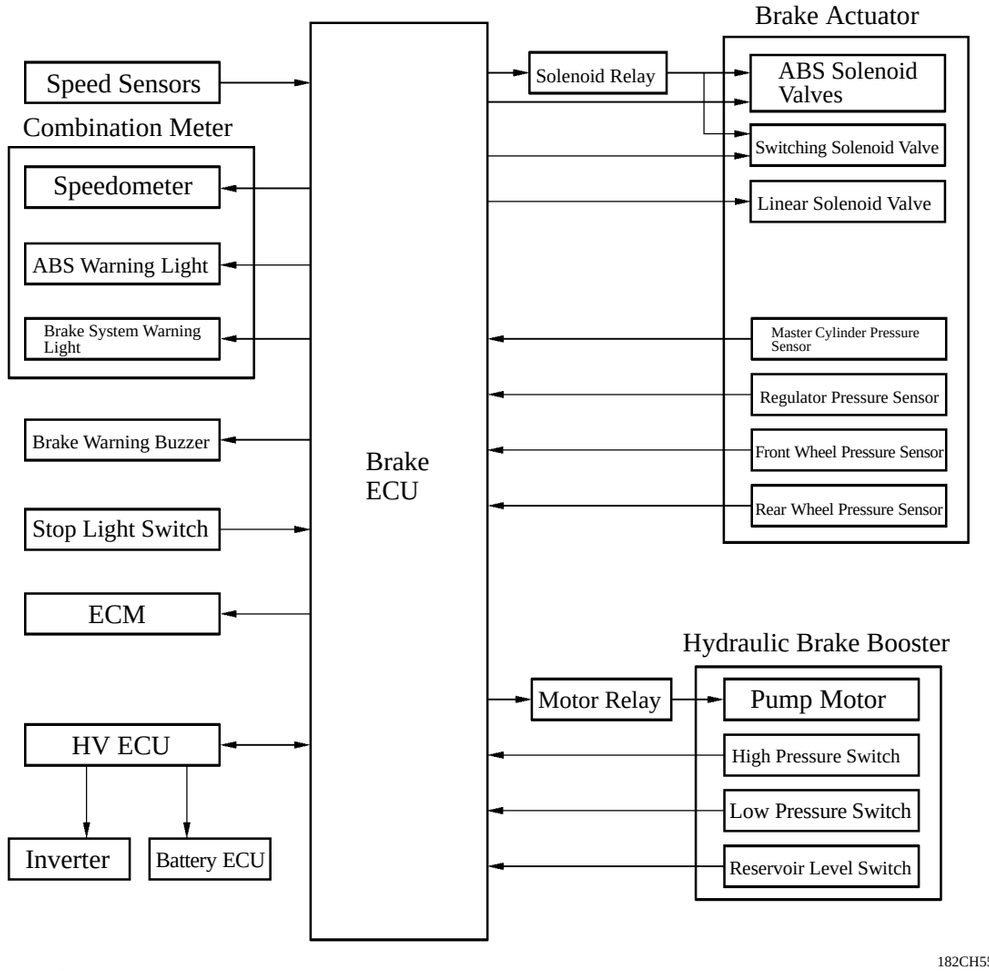

2) Fail Safe

If a malfunction occurs in the brake ECU, in the input signals from the sensors, or in actuator system, this function prohibits the current from flowing to the brake actuator.
As a result, the solenoids in the brake actuator turn off, enabling the braking force of the hydraulic brake to take effect. Furthermore, by illuminating the ABS warning light or the brake system warning light, this function alerts the driver that a malfunction exists in the system.
Only if the regenerative brake system cannot be used, such as in the case of a malfunction in the communication with the HV ECU, this function switches controls to enable the hydraulic brake to generate the entire brake force.

3) Warning Light Check Function

The ABS warning light and brake system warning light turns on for about 3 seconds after the ignition switch is turned on to check the circuit.

4) Self-Diagnosis

If the brake ECU detects a malfunction in the brake system, the ABS warning light and brake system warning light will light up and alert the driver that a malfunction has occurred. The ECU will also store the codes of malfunctions. See the 2001 Prius Repair Manual (Pub. No. RM778U) for the DTC (Diagnostic Trouble Code) check method, DTC and DTC clearance.

Brake System Control

1) ABS with EBD control

a. General

The EBD control utilizes ABS, realizing the proper brake force distribution between front and rear wheels in accordance with the driving conditions. In addition, during cornering braking, it also controls the brake forces of right and left front wheels, helping to maintain the vehicle stability.
The distribution of the brake force is performed under electrical control of the brake ECU, which precisely controls the brake force in accordance with the vehicle's driving conditions.

b. Operation

Based on the signals received from the 4 wheel speed sensors, the brake ECU calculates each wheel speed and deceleration, and checks wheel slipping condition. And according to the slipping condition, the ECU controls the solenoid valves in order to adjust the fluid pressure of each wheel cylinder in the following three modes: pressure reduction, pressure holding and pressure increase modes.

Not Activated	Normal Braking	–	–
Activated	Pressure Increase Mode	Pressure Holding Mode	Pressure Reduction Mode
Hydraulic Circuit	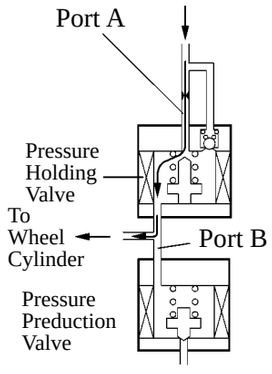	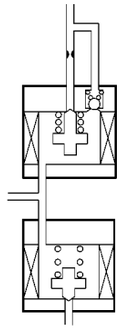	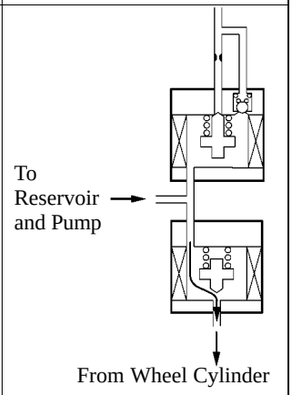
Pressure Holding Valve (Port A)	OFF (Open)	ON (Close)	ON (Close)
Pressure Reduction Valve (Port B)	OFF (Close)	OFF (Close)	ON (Open)
Wheel Cylinder Pressure	Increase	Hold	Reduction

▶ Sample of ABS control ◀

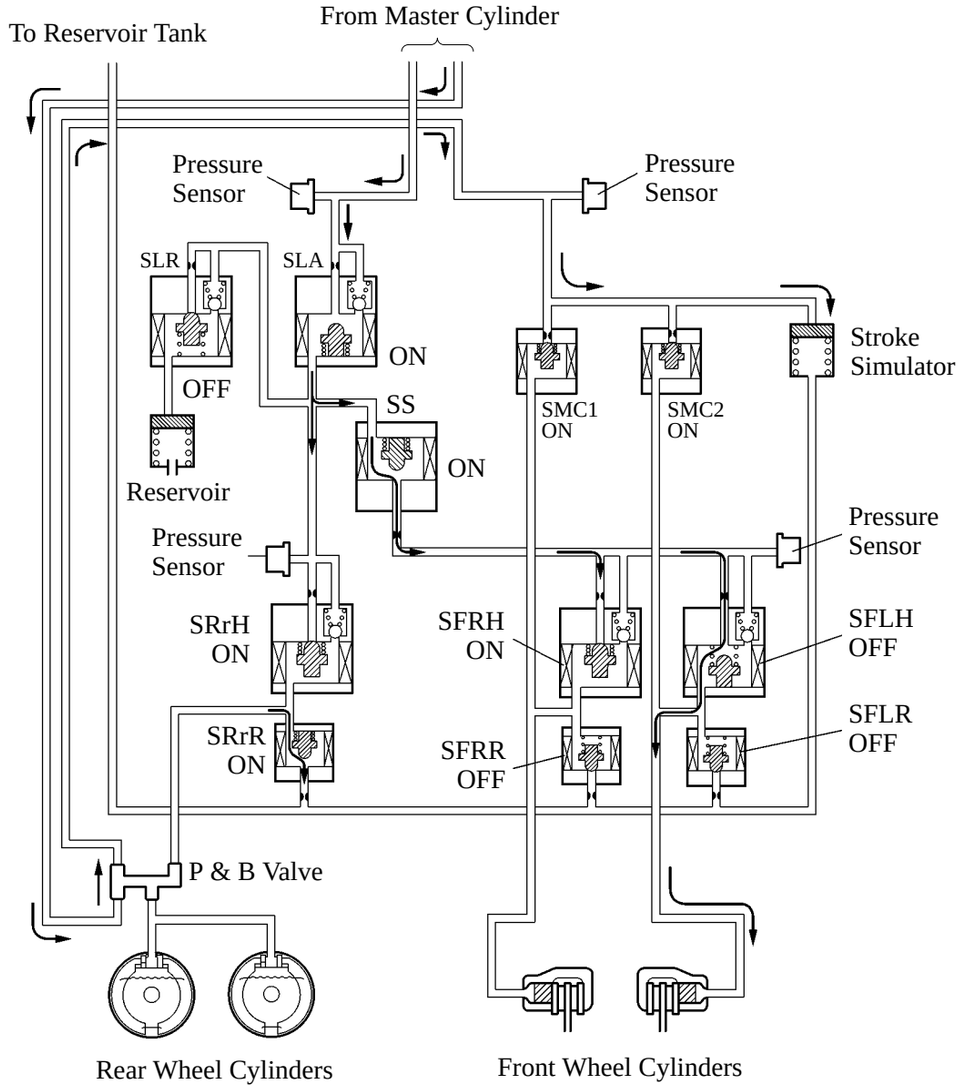

182CH57

2) Regenerative Brake Cooperative Control

a. General

The regenerative brake cooperative control uses the switching valves and linear solenoid valves to regulate the hydraulic pressure that is supplied to the wheel cylinders. It also operates cooperatively with the regenerative braking force that is generated in the MG2 in accordance with the master cylinder pressure.

b. Apportioning of the Brake Force

The apportioning of the brake force between the hydraulic brake and the regenerative brake varies by the vehicle speed and time.
The apportioning of the brake force between the hydraulic brake and the regenerative brake is controlled so that the total brake force of the hydraulic brake and the regenerative brake matches the brake force that the driver requires.

▶ Imagery Drawing ◀

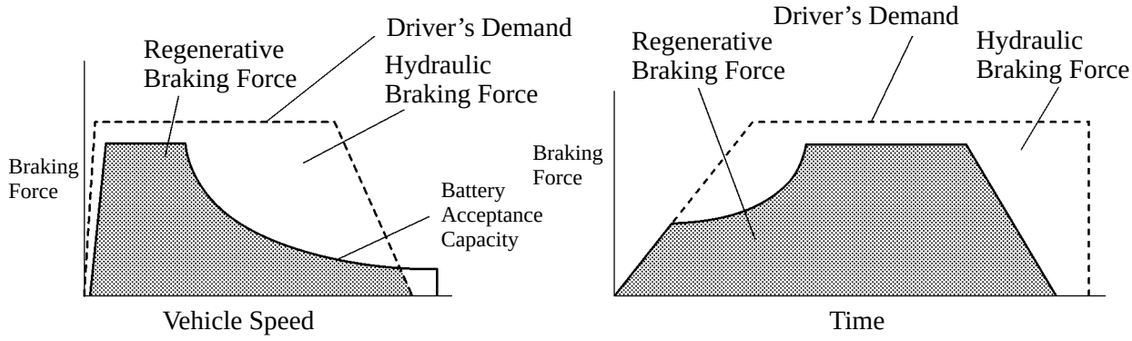

Changes in Regenerative Braking Force **Changes in Braking Force Apportionment**

182CH58

c. Operation

Regenerative brake cooperative control is executed when the vehicle is driven in the shift position "D" or "B".
The master cylinder pressure that is generated when the driver presses on the brake pedal is detected by the pressure sensor, and the brake ECU calculates the brake force request factor. A portion of the brake force request factor is transmitted to the HV ECU in the form of a regenerative brake activation request factor. The HV ECU executes generative braking by commanding the electric motor to generate negative torque.
The brake ECU controls the opening of the linear solenoid valves, which are used for increasing/decreasing the hydraulic pressure, to regulate the wheel cylinder hydraulic pressure in relation to the master cylinder hydraulic pressure, thus compensating for the brake force that is not provided sufficiently by the regenerative brake.
While the regenerative brake cooperative control is being prohibited due to an abnormality in the system, or when the shift lever is in a position other than D or B, the regenerative braking force is not generated. At this time, only the hydraulic braking force is applied by turning ON (opening) the linear solenoid valve SLA and turning OFF (closing) the SLR.

i) Regenerative Brake Cooperative Control

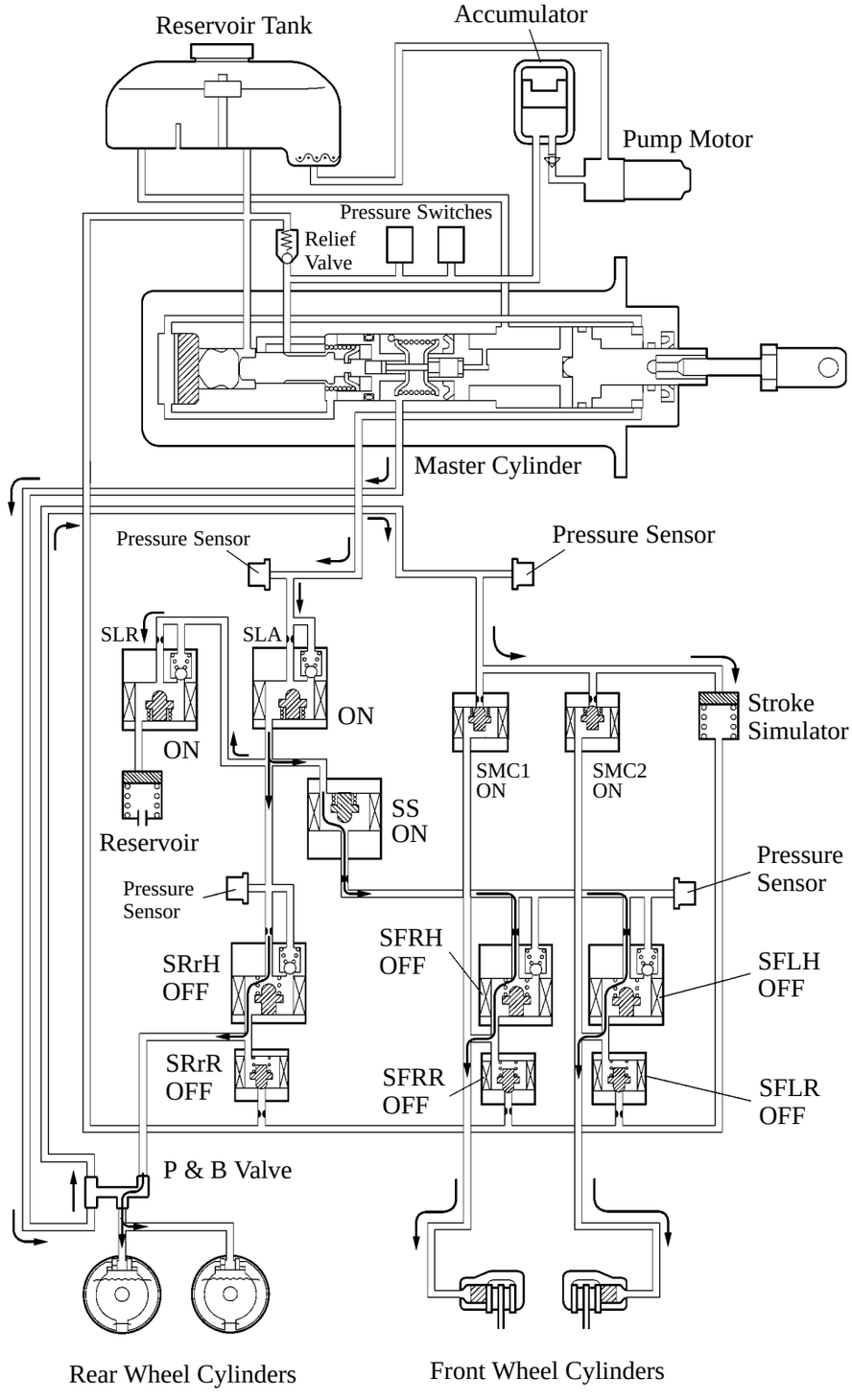

182CH59

ii) Without Regenerative Brake Cooperative Control (Hydraulic Brake Only)

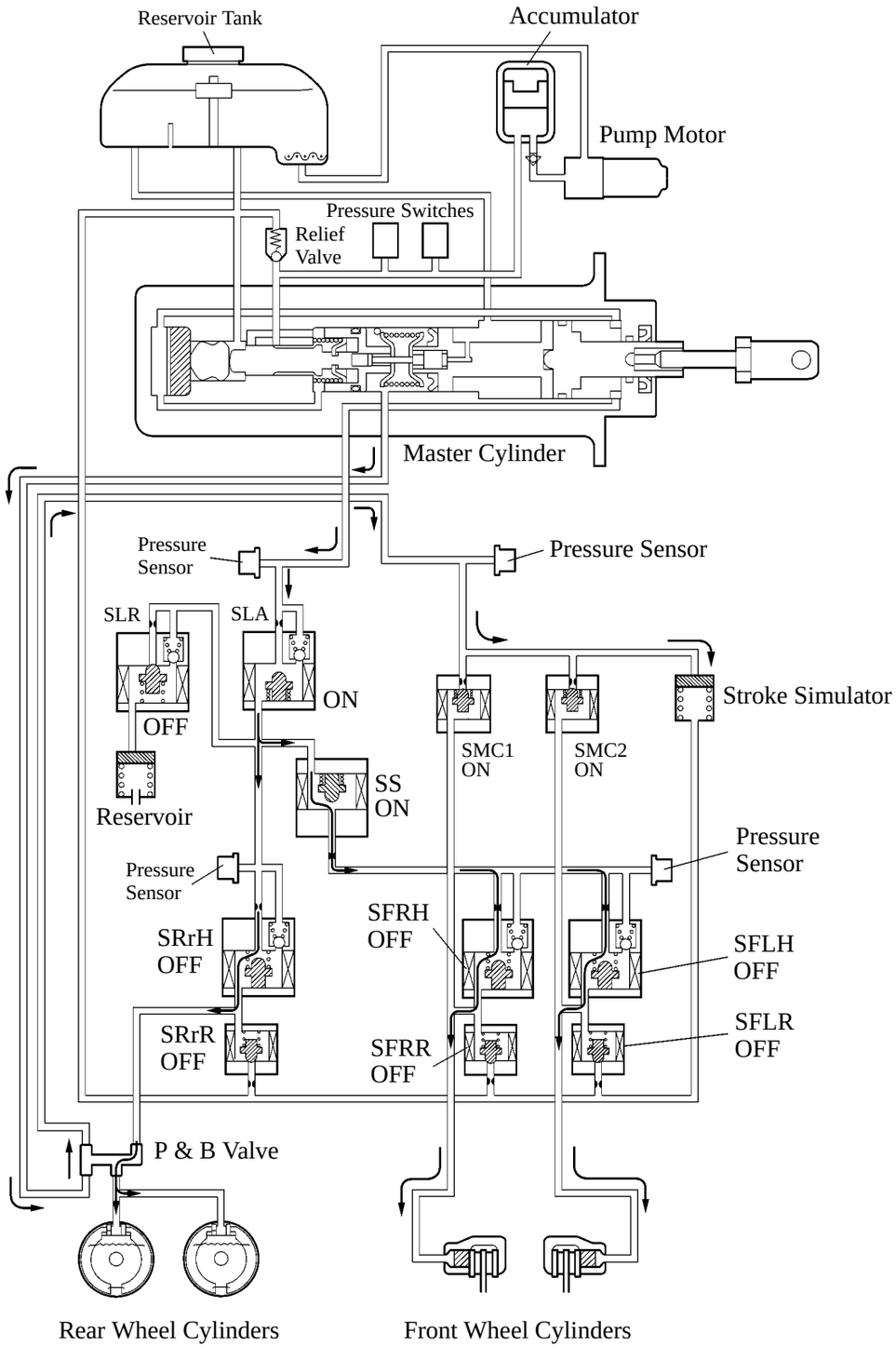

3) Fail-Safe Control

If a malfunction occurs in the brake ECU, in the input signals from the sensors, or in the actuator system, this function prohibits the current from flowing to the brake actuator.

As a result, the solenoids in the brake actuator turn off, enabling the braking force of the hydraulic brake to take effect. The relief function is provided in order to ensure the proper wheel cylinder hydraulic pressure even if the linear solenoid valve SLA is OFF (closed). Only if the regenerative brake system cannot be used, such as in the case of a malfunction in the communication with the HV ECU, this function switches controls to enable the hydraulic brake to generate the entire brake force.

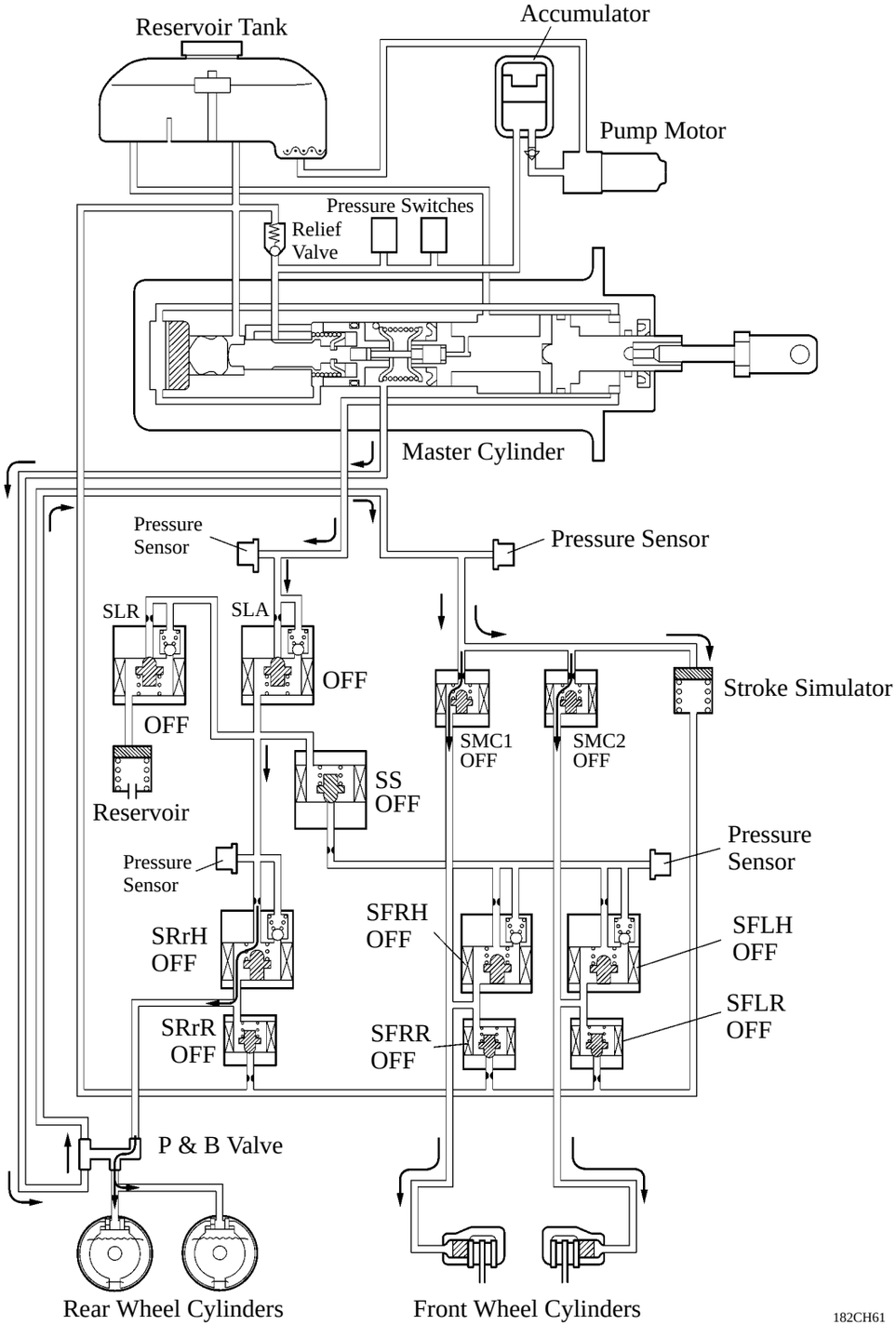

STEERING

■DESCRIPTION

- A vehicle-speed sensing type EMPS (Electric Motor-assisted Power Steering) has been adopted. The EMPS uses the EMPS ECU to control a DC motor that is mounted on the steering gear in accordance with the signals received from various sensors to provide power assist to the steering effort.
- A rack and pinion type steering gear and a stepless tilt steering have been adopted.
- The steering column has adopted an energy absorbing mechanism that uses energy absorbing plate.

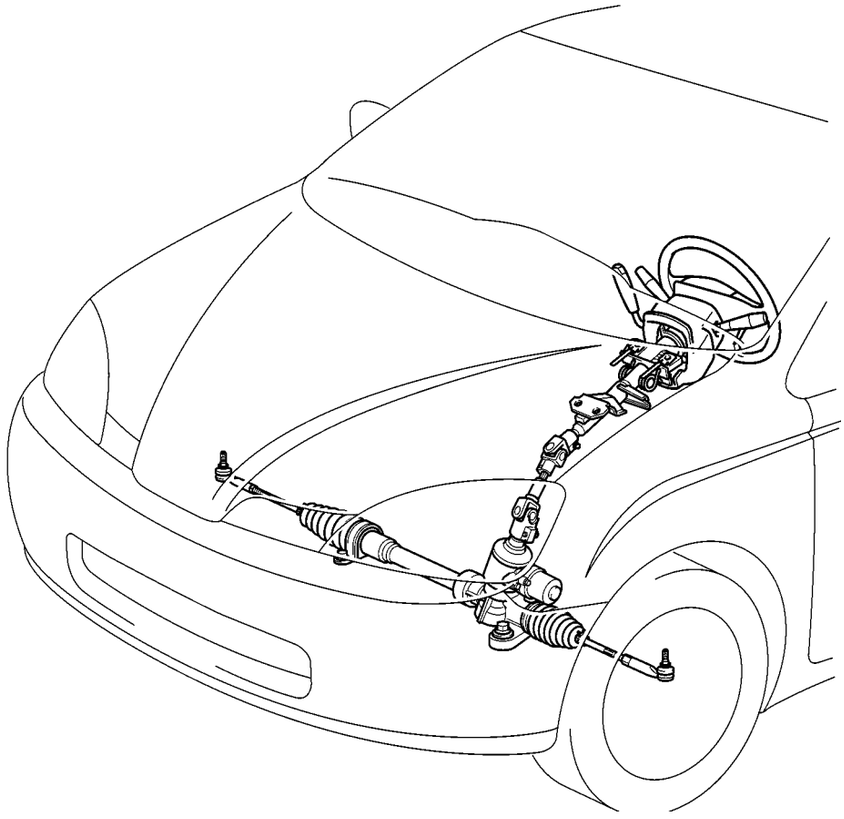

182CH62

▶ Specifications ◀

Gear Ratio (Overall)		16.4 ~ 18.3
No. of Turns Lock to Lock		3.99
Rack Stroke	mm (in.)	149.6 (5.89)

■EMPS (Electric Motor-assisted Power Steering)

1. General

In accordance with sensor information such as that provided by the rear wheel speed sensors, the torque sensor that is mounted on the steering gear, and the EMPS ECU determines the direction and the force of the power assist and actuates the DC motor that is mounted on the steering gear to provide power assist to the steering effort.
The EMPS in the Prius the following features:

- This system can provide power assist even when the engine is stopped.
- This system offers excellent fuel economy characteristics because power assist is provided by the DC motor that is mounted on the steering gear, and this motor consumes energy only when power assist is required.
- Unlike the conventional hydraulic power steering system, this system excels in serviceability because it does not require pipes or the power steering fluid.

▶ System Diagram ◀

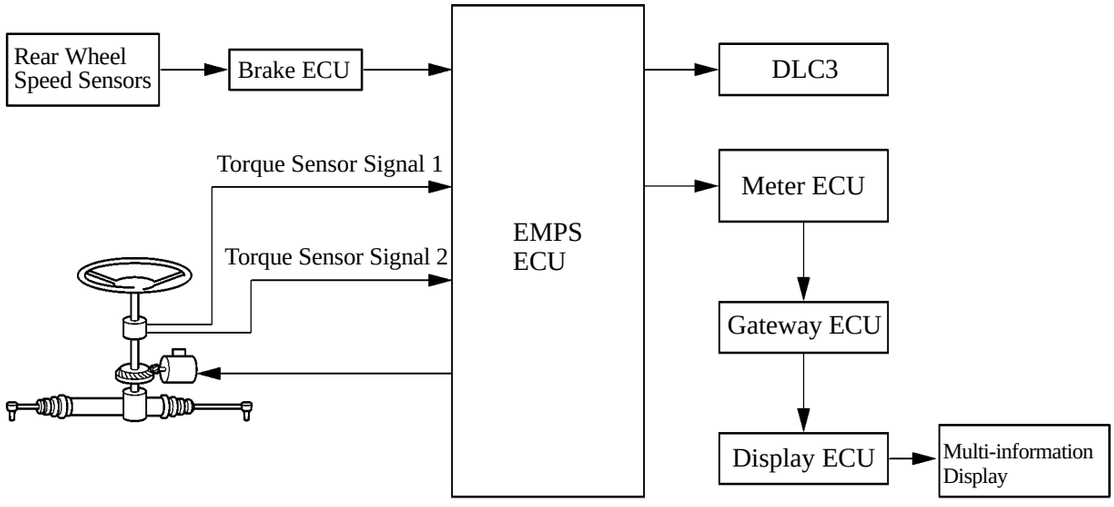

182CH68

2. Layout of Main Components

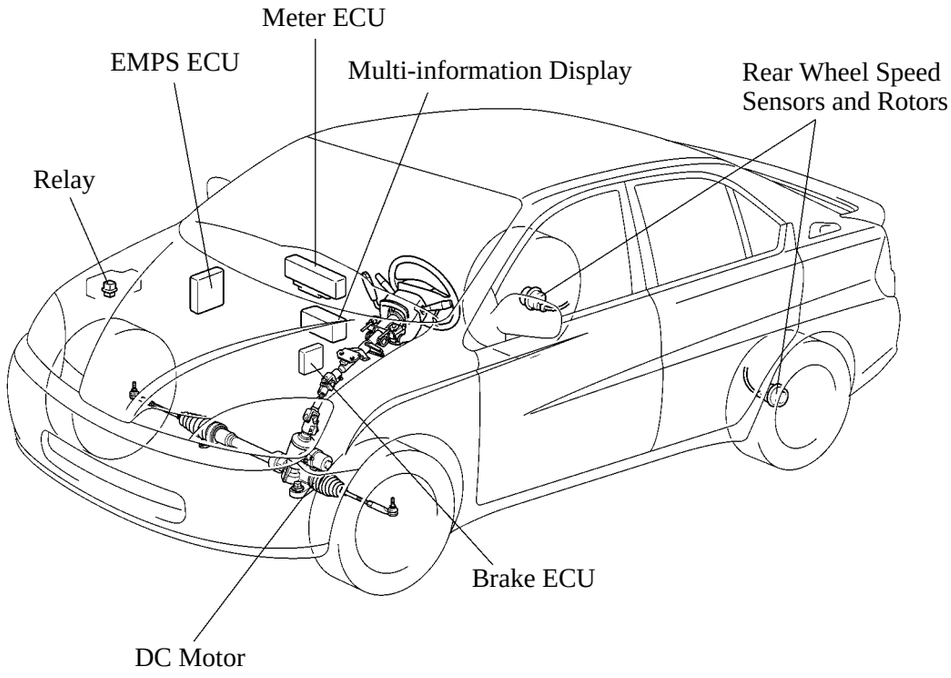

182CH69

3. Function of Main Components

Components		Function
Steering Gear	Torque Sensor	Detects the twist of the torsion bar, converts the torque that is applied to the torsion bar into an electrical signal, and outputs this signal to the ECU.
	DC Motor	Generates power assist in accordance with a signal received from the EMPS ECU.
	Reduction Mechanism	Reduces the rotation of the DC motor and transmits it to the pinion shaft.
EMPS ECU		Actuates the DC motor mounted on the steering gear for providing power assist, based on the signals received from various sensors and the rear wheel speed signal.
Meter ECU		Outputs a signal for displaying the PS warning on the center display in case of a malfunction in the system.
Brake ECU		Rear wheel speed signals are outputted to EMPS ECU.
Relay		Supplies power to the DC motor for power assist.
Multi-information Display		Displays the PS warning in case of a malfunction in the system.

4. Construction and Operation of Main Components

Steering Gear

1) General

The steering gear consists of the rack and pinion, DC motor, reduction mechanism, and torque sensor. The front suspension components have been optimized to reduce the load on the DC motor. Also, the components have been optimally allocated to ensure ample rack travel and wheel turning angle, resulting in excellent cornering performance.

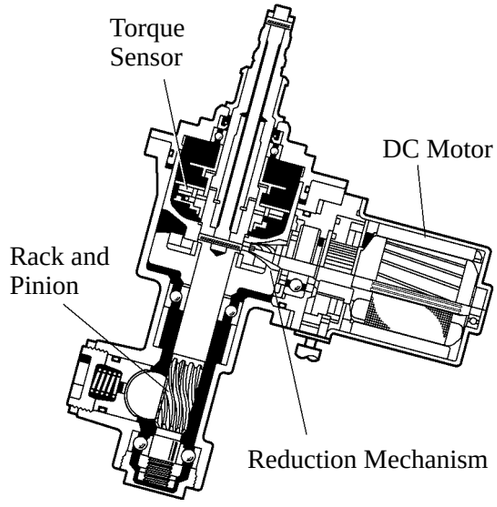

182CH70

2) DC Motor

The DC motor is mounted on the gear housing. The DC motor consists of the motor shaft that is integrated with the hypoid pinion to transmit the torque that has been generated by the drive force of DC motor to the pinion shaft, the rotor and stator.

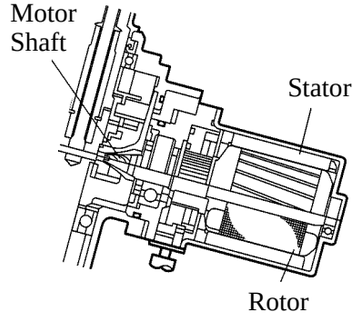

182CH71

3) Reduction Mechanism

A reduction mechanism that transmits the rotation of the motor to the pinion shaft has been mounted on the steering gear. The reduction mechanism consists of the ring gear that is secured to the pinion shaft and the pinion gear that is integrated with the motor shaft. The power assist of the motor is transmitted by the reduction mechanism to the pinion shaft, which provides power assist to the steering effort.

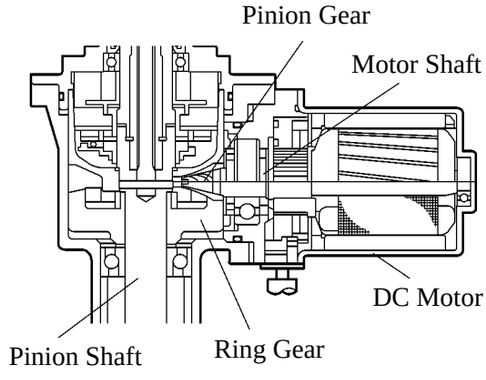

182CH72

4) Torque Sensor

A torque sensor that detects the torque that is input by the steering wheel has been mounted on the pinion shaft. The torque sensor has been integrated with the pinion shaft, and the pinion shaft's input and output shafts are linked via the torsion bar. Resistors for the torque sensor are mounted on the input shaft of the pinion shaft, and contacts for the torque sensor are mounted on the output shaft of the pinion shaft. Operating the steering wheel causes the torsion bar to twist, creating a displacement between the pinnion shaft's input and output. Two systems of torque sensors detect this displacement in the form of voltage changes, which are then output to the EMPS ECU.

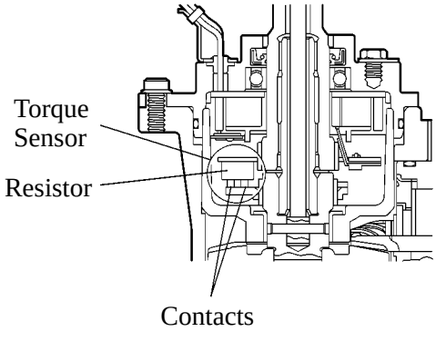

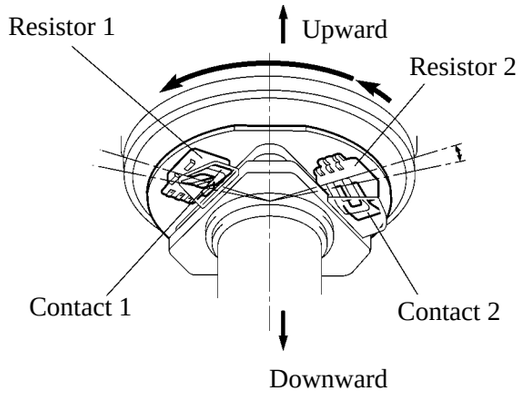

182CH73

i) Straightline Driving

If the vehicle is driven straight and the driver does not turn the steering, torque is not generated in the pinion shaft's input shaft. Thus, the torsion bar does not twist, and no changes in resistance occur in the torque sensor.

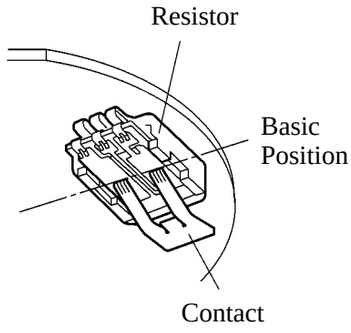

Straightline

182CH74

ii) Steering to the right

When the driver turns the steering to the right, the steering torque is transmitted to the pinion shaft's input shaft, causing the input shaft to rotate. Because the reaction force of the ground surface acts on the rack bar, the torsion bar that links the input shaft and the pinion twists until a torque that equalizes with the reaction force is generated. Thus, a relative displacement is created between the resistor that is secured onto the input shaft and the contact that is secured onto the pinion shaft's output shaft. As a result, the resistance changes, causing the torque sensor's outputs 1 and 2 to change as shown in the right diagram. The EMPS ECU uses this voltage difference to calculate the power assist torque to drive the DC motor, thus generating a power assist force in the pinion shaft via the reduction mechanism.

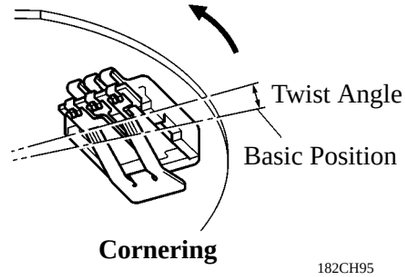

Cornering

182CH95

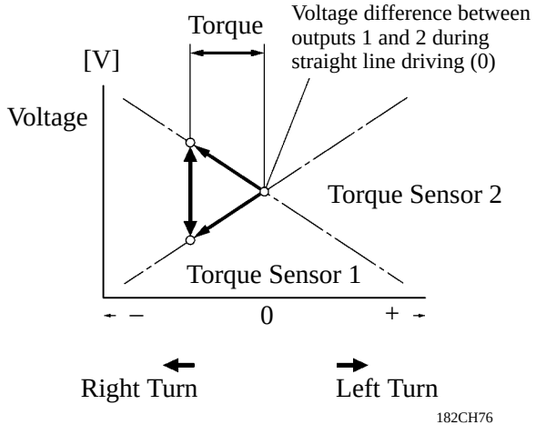

182CH76

iii) Steering Hold Condition

The torsion bar shift to a position in which the sum of the driver's steering torque and the motor's assist torque equalizes with the reaction force of the ground surface in order to maintain the steering holding condition.

EMPS ECU

1) EMPS Control

The EMPS ECU receives signals from various sensors, judges the current vehicle condition, and determines the assist ampere to be applied to the DC motor accordingly.

2) Self-Diagnosis

If the EMPS ECU detects a malfunction in the EMPS system, the warning light that corresponds to the function in which the malfunction has been detected lights up to alert the driver of the malfunction. The EMPS ECU will also store the codes of the malfunctions. The DTCs (Diagnostic Trouble Codes) can be accessed through the use of a hand-held tester. For details, see the 2001 Prius Repair Manual (Pub. No. RM778U).

3) Fail-Safe

If the EMPS ECU detects a malfunction in the EMPS system, the system basically turns OFF the power to prohibit power assist. As a result, the EMPS system operates the same way as manual steering. However, depending on the location in which the malfunction occurred, power assist may be provided by reducing the power assist amperage or by fixing the amount of power assist without relying on the vehicle speed.

■ TILT STEERING

The tilt mechanism consists of a tilt lever, column tube, breakaway bracket, tilt lever lock bolt, tilt steering adjusting nut.
When the tilt mechanism is in its locked state, operating the tilt lever downward causes the tilt steering adjusting nut to loosen (because the tilt lever lock bolt has left-handed screw threads).
When the tilt mechanism is in its free state, operating the tilt lever upward causes the tilt steering adjusting nut to tighten.

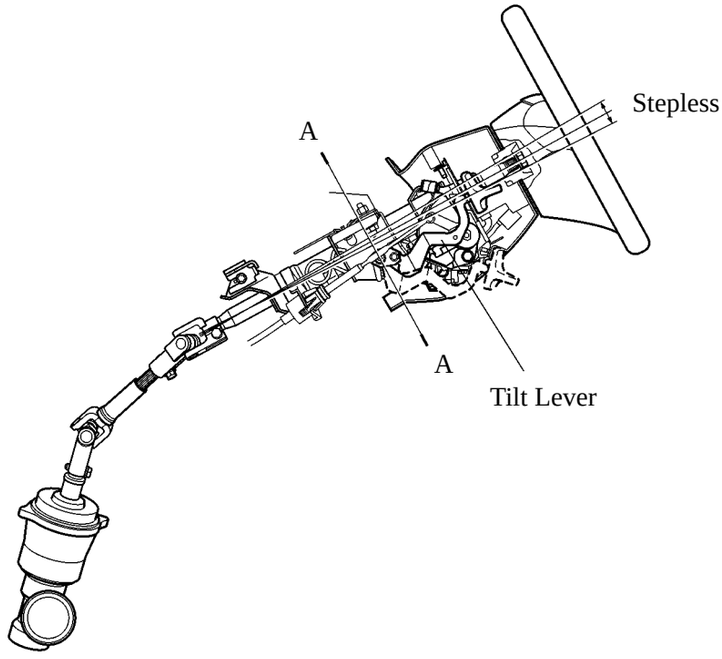

182CH63

▶ A – A Cross Section ◀

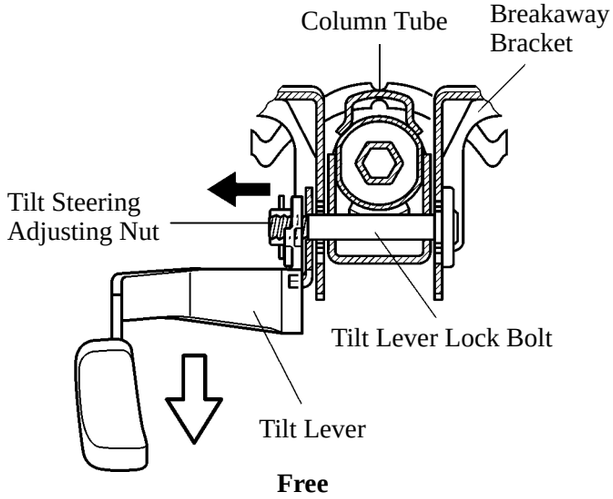

Free

182CH64

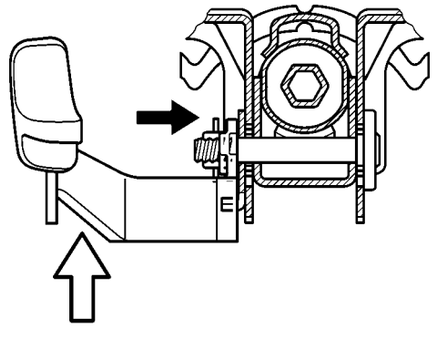

Lock

182CH65

■ENERGY ABSORBING MECHANISM

The energy absorbing mechanism in the steering column consists of a lower bracket, breakaway bracket, energy absorbing plate and a contractile main shaft. The steering column is mounted onto the instrument panel reinforcement via a lower bracket and breakaway bracket which is supported via a capsule and energy absorbing plate. The steering column and the steering gear box are connected with a contractile intermediate shaft. Operational examples of this mechanism are follows.

When the steering gear box moves during a collision (primary collision), the main shaft and the intermediate shaft contract, thus reduce the chance that the steering column and the steering wheel protrude into the cabin.

When an impact is transmitted to the steering wheel in a collision (secondary collision), the steering wheel and the driver airbag help absorb the impact. In addition, the breakaway bracket and the lower bracket separate, causing the entire steering column to move forward.

At this time, the energy absorbing plate becomes deformed to help absorb the impact of the secondary collision.

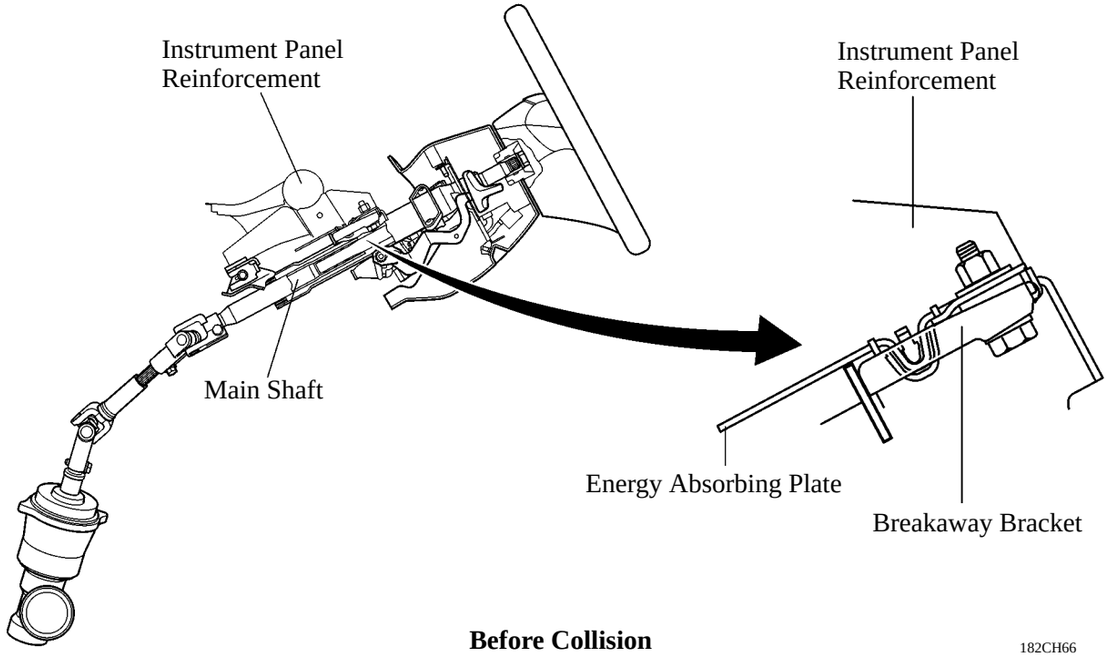

Before Collision

182CH66

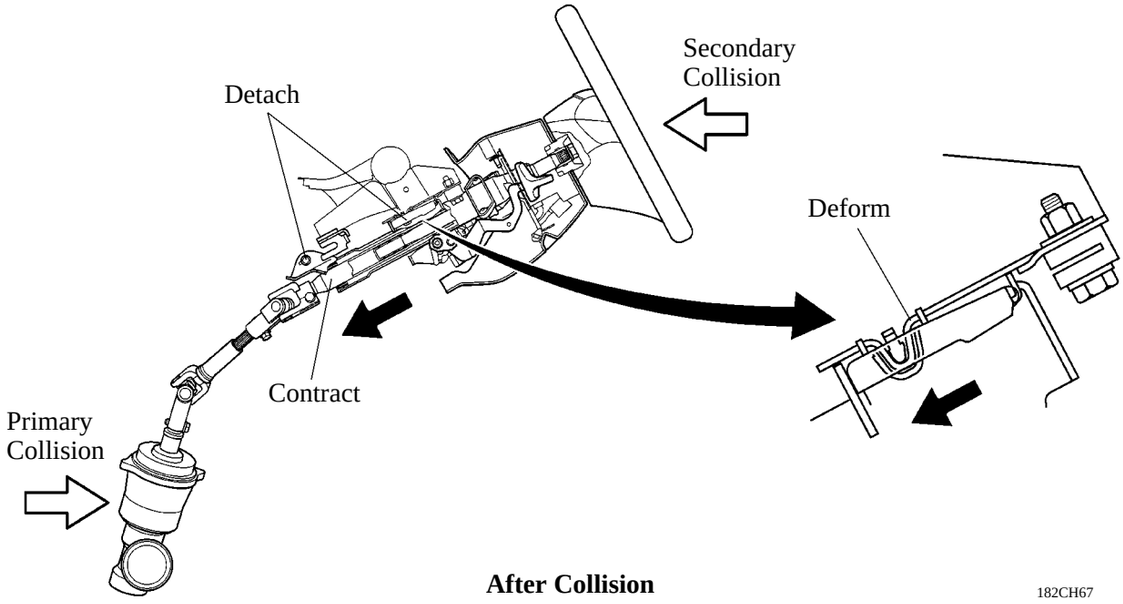

After Collision

182CH67

BODY

BODY STRUCTURE

■DESCRIPTION

The Prius has adopted a body construction that achieves both high rigidity and safety.

■LIGHTWEIGHT AND HIGHLY RIGID BODY

1. High Strength Sheet Steel

High strength sheet steel has been used in order to ensure body rigidity and realize a lightweight body.

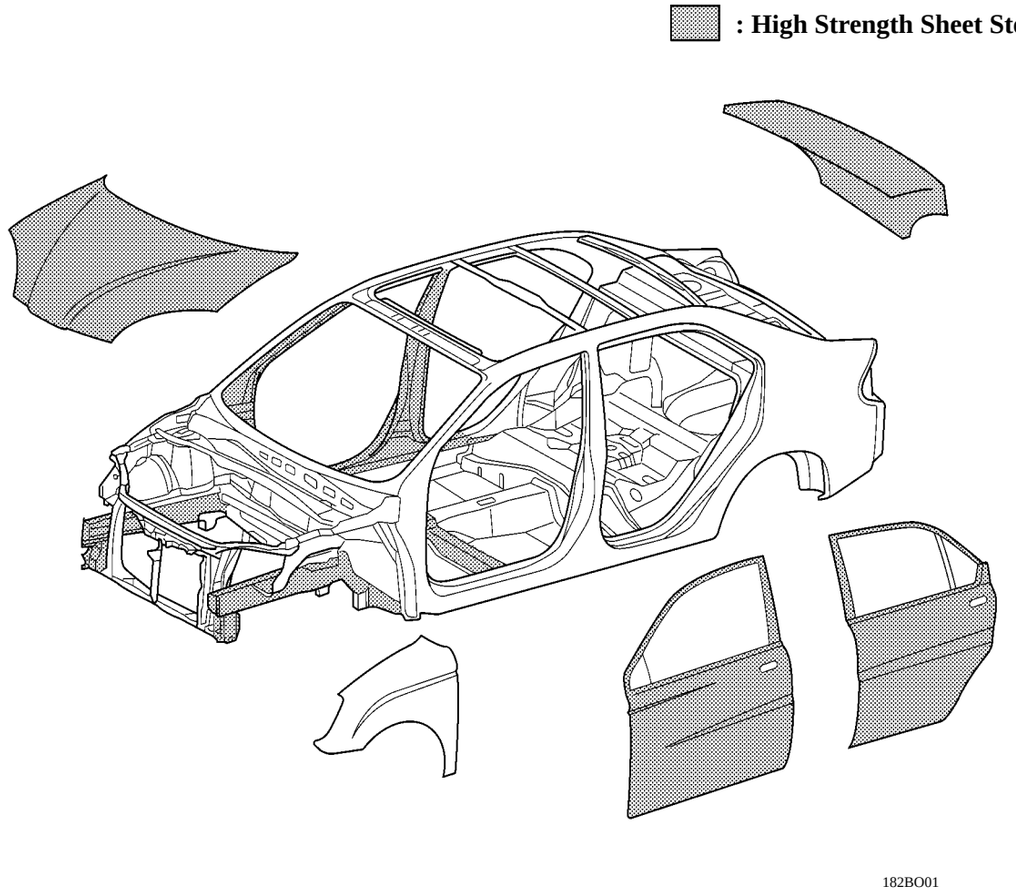

2. Body Shell

- The joining construction (A-A cross section) of the cowl side panel, front pillar, and the instrument panel reinforcement has been optimized to restrain the generation of vibrations.
- By joining the under body and the front pillar with a pillar brace (B-B cross section), as well as the upper end of the front pillar with the roof header (C-C cross section), the generation of vibrations has been restrained.
- By providing a gusset (D) in the quarter wheel house and a reinforcement (E) in the upper back panel, the generation of vibrations in the rear body area has been restrained.

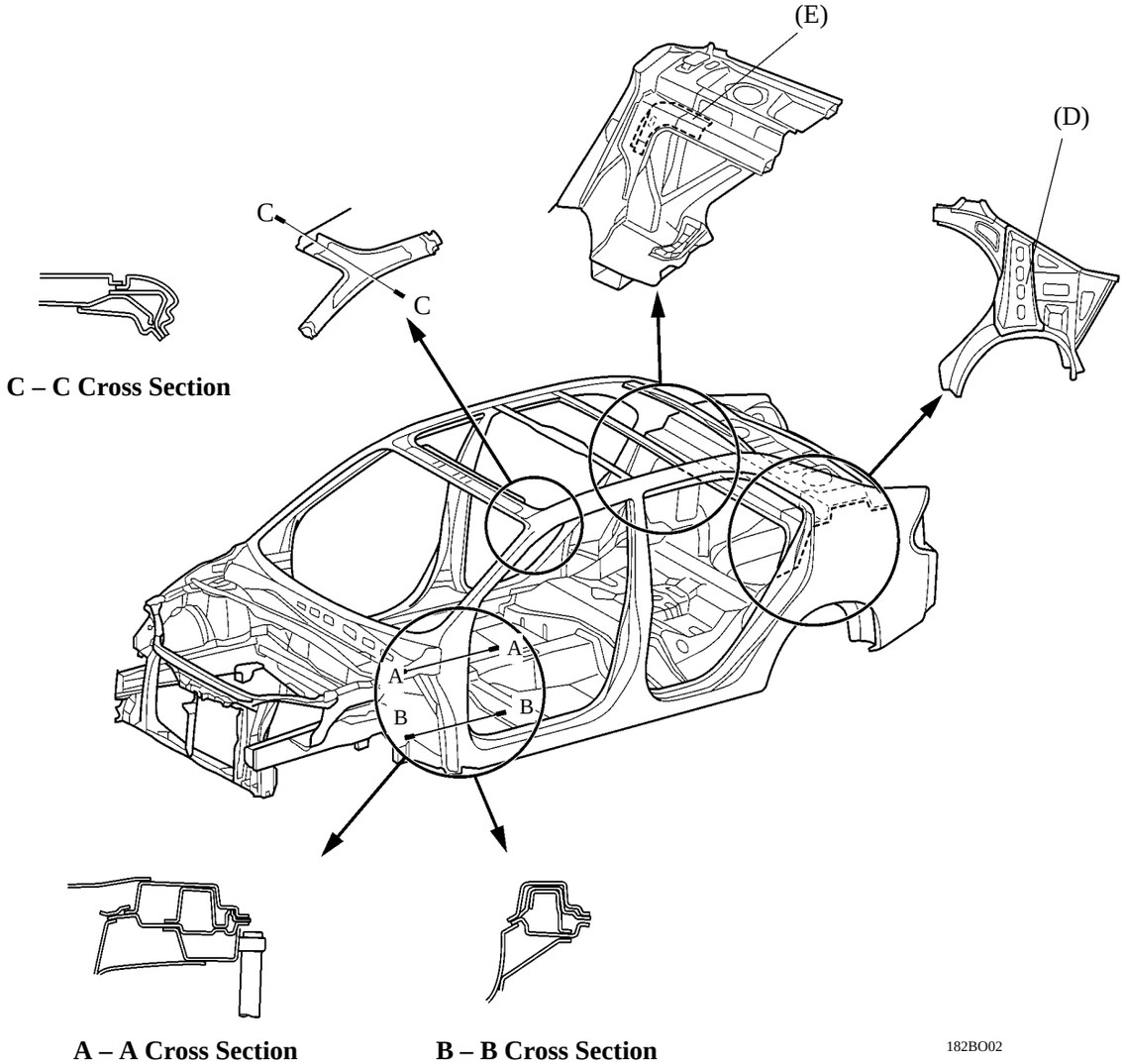

C – C Cross Section

A – A Cross Section

B – B Cross Section

182BO02

■SAFETY FEATURES

1. Impact Absorbing Structure

General

The impact absorbing structure of the Prius provides a body construction that can effectively helps absorb the energy of impact in the event of a front, or side collision. Also, it realizes a high level of occupant protection performance through the use of reinforcements and members that help to minimize cabin deformation.

Construction

1) Impact Absorbing Structure for Front Collision

In conjunction with the high level of impact absorbing structure for a front collision, the front bumper reinforcement, the side members, the reinforcements and members that surround the cabin have been optimally allocated.
Accordingly, the frameworks of the underbody and cabin help to absorb and dissipate the impact energy efficiently, and to realize the minimized cabin deformation, in case of a front collision.

▶ Impact Absorbing Structure for Front Collision ◀

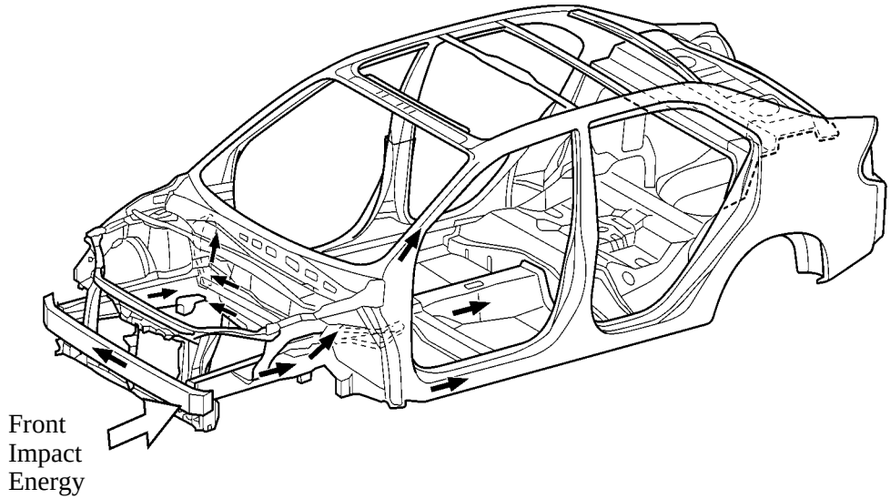

182BO03

2) Impact Absorbing Structure for Side Collision

- Impact energy of a side collision directed to the cabin area is dispersed throughout the body via pillar reinforcements, side impact protection beams, floor cross members, thus helping minimize the impact energy finally directed to the cabin. In addition, the body is made reinforced joints and high strength sheet steel, in order to help maintain the maximum preservation of the cabin space. And, in order to make the door energy absorbent, a closed cross section configuration is provided at the belt line area of the front and rear doors.
- By providing an energy absorbing urethane pad in the front door panel and an energy absorbing material in the door panel and the center pillar garnish, the impact of a collision can be dampened.
- A head impact protection structure has been adopted. With this type of construction, if the occupant's head hits against the roof side rail and pillar in reaction to a collision, the inner panel of the roof side rail and pillar collapses to help reduce the impact.

▶ Impact Absorbing Structure for Side Collision ◀

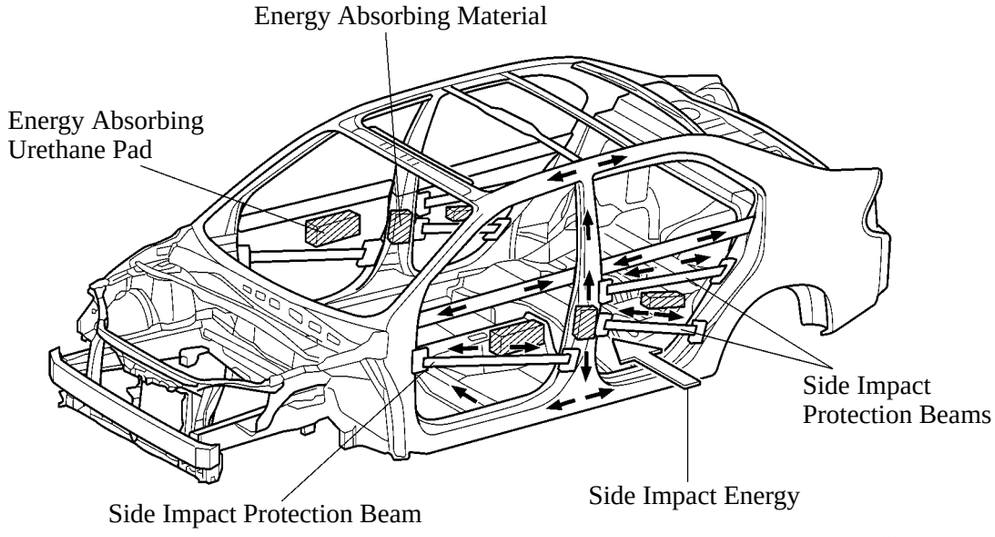

▶ Head Impact Protection Structure ◀

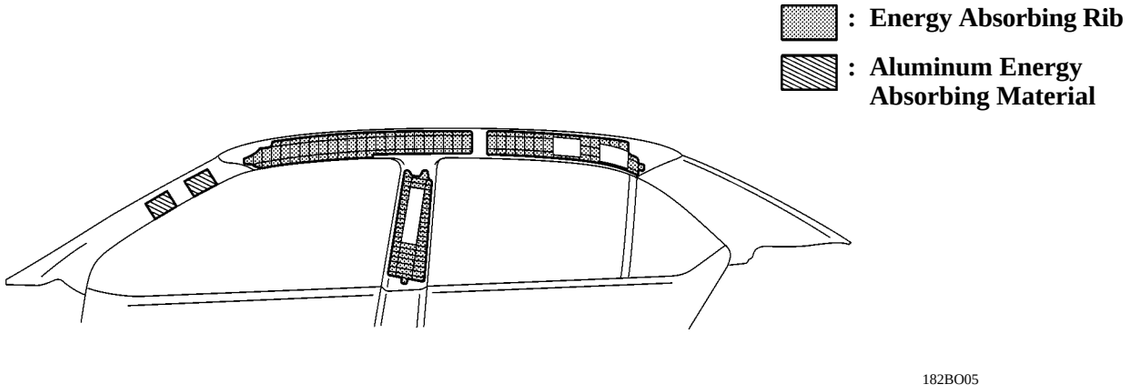

■RUST-RESISTANT BODY

1. General

Rust-resistant performance is enhanced by extensive use of anti-corrosion sheet steel and an anti-corrosion treatment by applying wax, sealer and anti-chipping paint to easily corroded parts such as the hoods, doors and rocker panels.

2. Anti-Corrosion Sheet Steel

Anti-corrosion sheet steel is used in all areas other than the roof and interior parts.

: Anti-Corrosion Sheet Steel

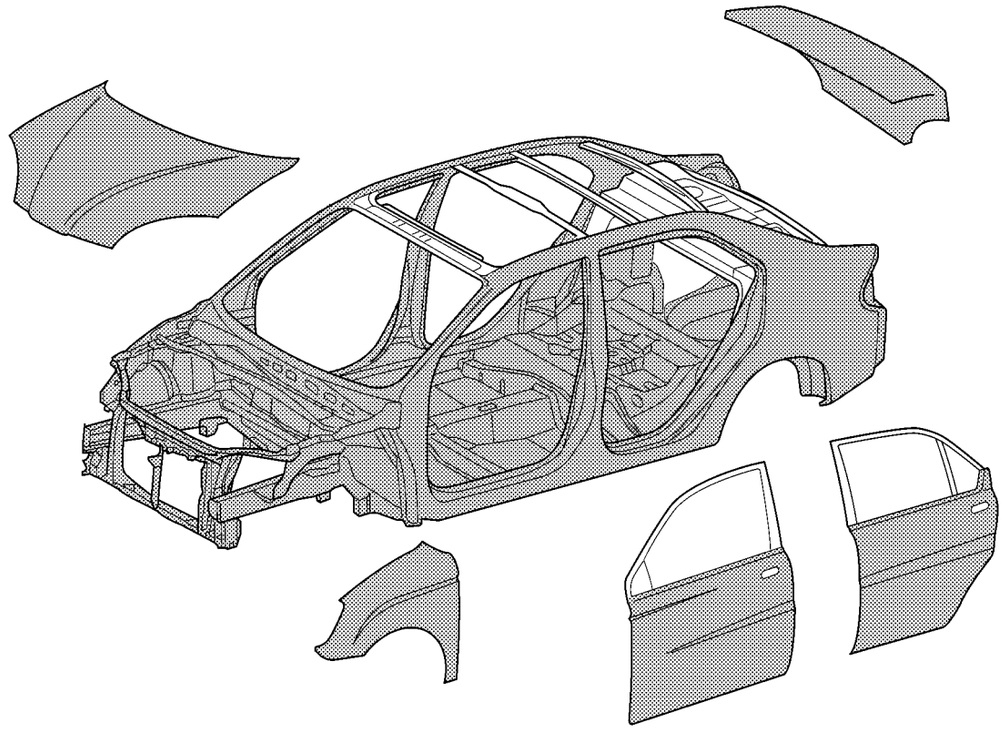

182BO06

3. Wax and Sealer

Wax and sealer are applied to the hemmed portions of the hoods, door panels, rocker panel and luggage compartment door to improve rust-resistant performance.

4. Under Coat

PVC (Polyvinyl Chloride) coating is applied to the under side of the body.
The bottom side of the cowl panel, the fender apron and other parts which are subject to damage by stone chipping.

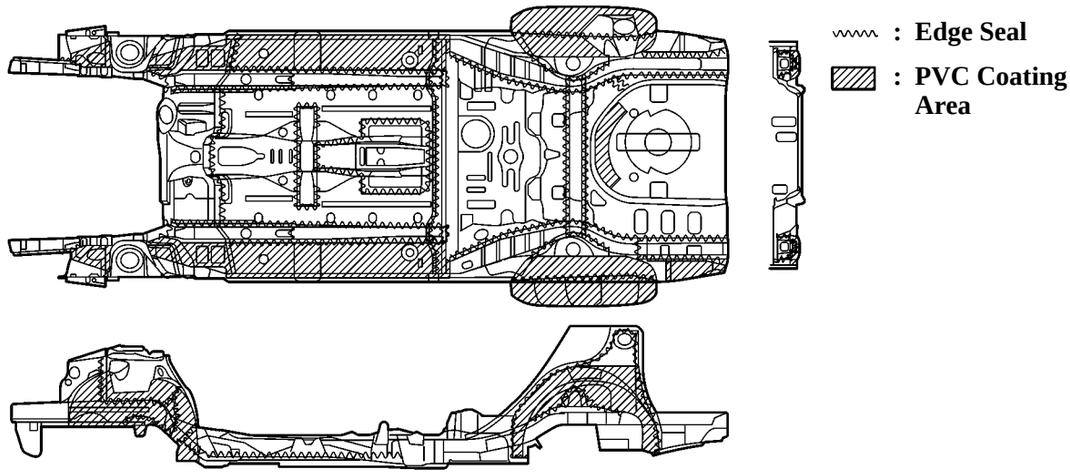

182BO07

5. Anti-Chipping Application

Anti-chipping paint and PVC chipping primer are applied to the lower quarter panel area, lower door panel area, front hood area and the rocker panel area to protect them from stone chipping.

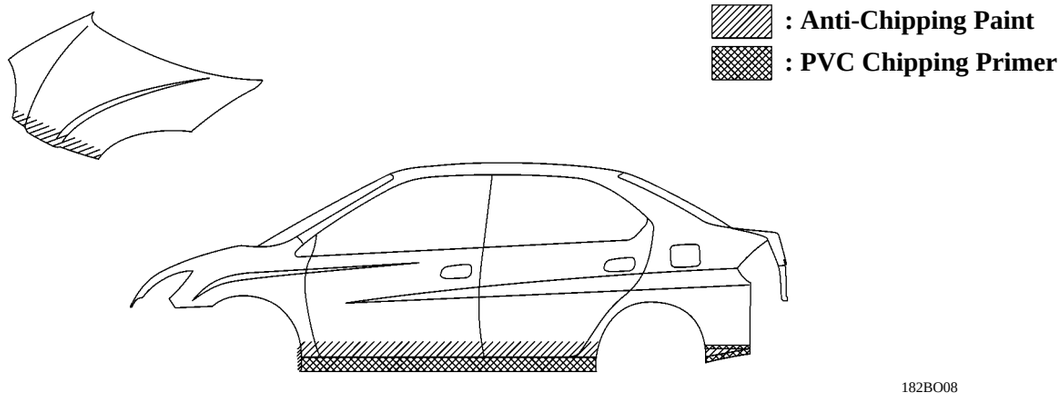

182BO08

■LOW VIBRATION AND LOW NOISE BODY

1. General

Effective application of vibration damping and noise suppresant materials reduces engine and road noise.

2. Sound Absorbing and Vibration Damping Materials

- Adoption of the dash panel silencer made the reduction of the engine and road noise and improved the quietness in the compartment.
- Foamed urethane sponge, foamed seal material, felt and roof silencer pad are applied onto the roof panel and pillars to reduce wind and road noise.
- The adoption of the floor silencer realized the reduction of the engine and road noise. Also, the adoption of RSPP (Recycled Sound Proof Products) for raw material realized the improvement of recylability.

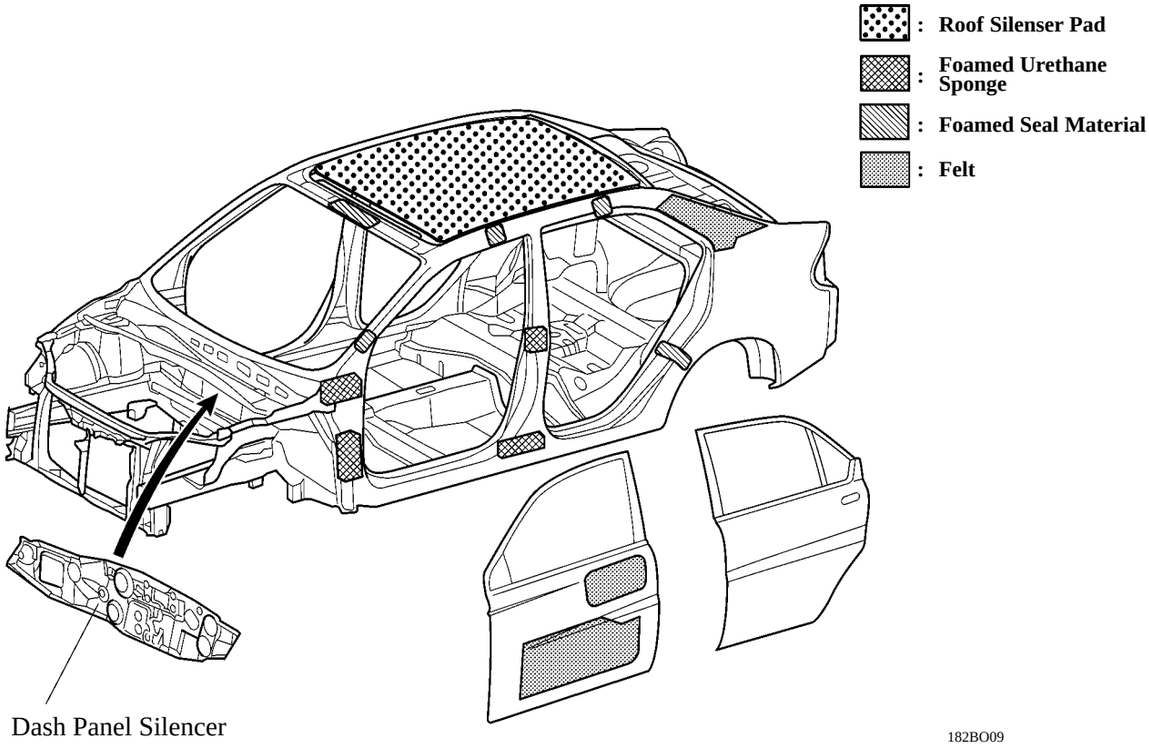

182BO09

Floor Silencer (RSPP)

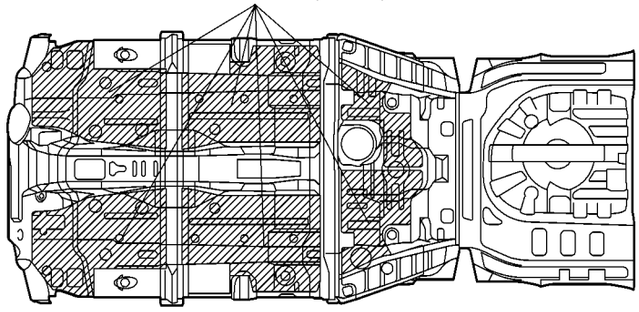

182BO10

AERODYNAMICS

■ DESCRIPTION

To improve aerodynamic performance, the following measures have been taken.

- The shapes of the front pillar, outside rear view mirror, and the front windshield glass have been optimized to achieve a smooth air flow.
- The height and the shape of the front bumper have been optimized in order to rectify the airflow under the floor and along the body sides.
- The shapes of the engine undercover, fuel tank bottom surface, and the rear floor bottom surface have been optimized to achieve a smooth underbody air flow.
- A front and rear fairings are provided to smooth out the airflow around the tires and reduce the air resistance while the vehicle is in motion.

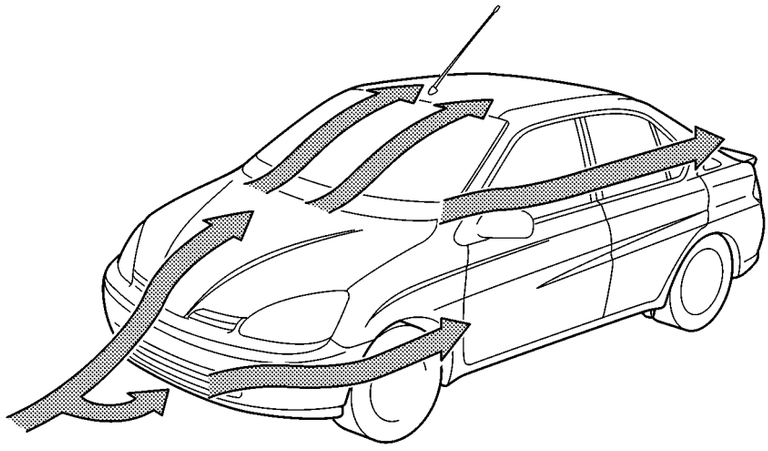

182BO12

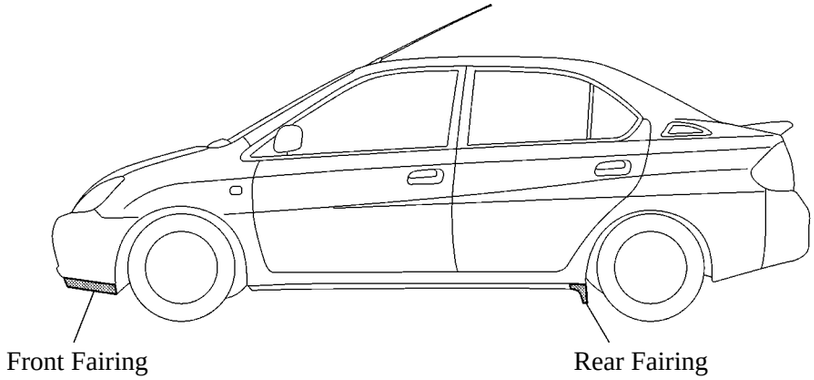

182BO13

ENHANCEMENT OF PRODUCT APPEAL

■ INTERNAL TRUNK RELEASE HANDLE

An internal trunk release handle is included inside the trunk in case a person inadvertently locks himself within the trunk and needs to free himself. The handle is made of phosphorescent so that it is visible in the trunk for a while even after the trunk has been closed.

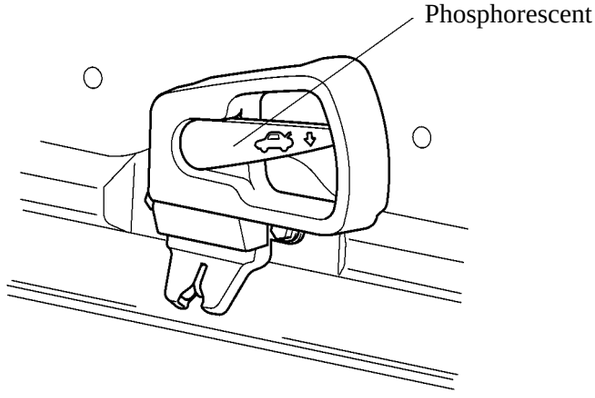

182BO14

■ SEAT

- CRS (Child Restraint System) lower anchorage for securing child seats, which complies with FMVSS225, has been provided behind the seat cushion of both outer rear seats.
- Three CRS anchor brackets for securing a child seat have been provided above the package tray trim.

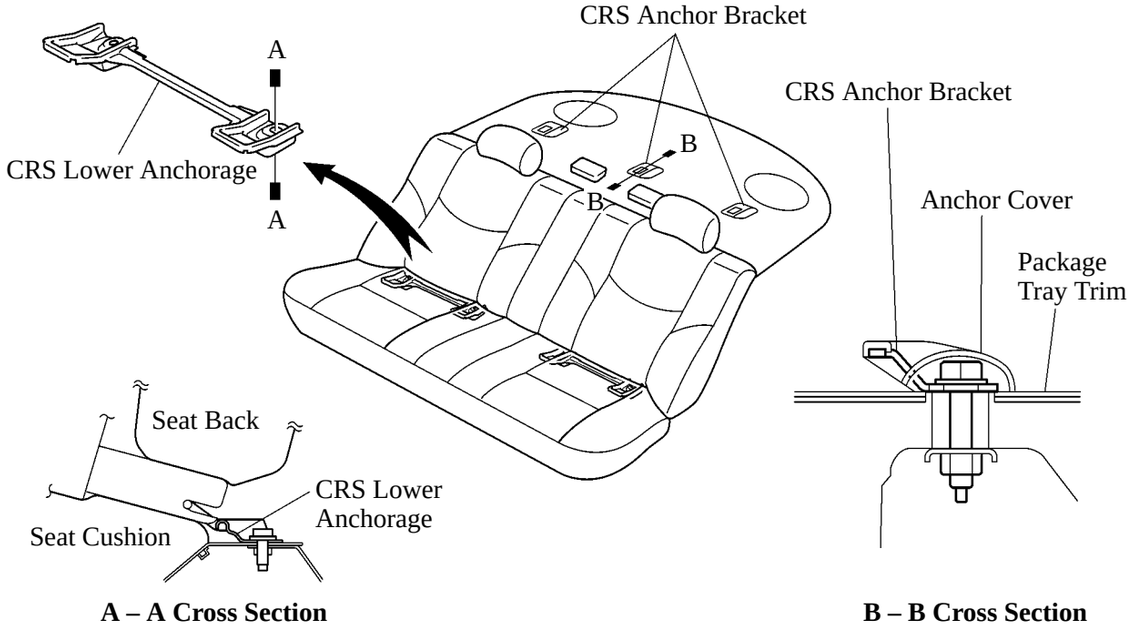

A – A Cross Section **B – B Cross Section**

182BO15

■SEAT BELT

1. General

- The front seats are provided with an electrical sensing type seat belt pretensioner and a seat belt force limiter. In the beginning of a collision, the seat belt pretensioner instantly pulls up the seat belt thus providing the excellent belt's effectiveness in restraining the occupant.
  When the impact of a collision causes the tension of the seat belt applied to the occupant to reach a predetermined level, the force limiter restrains the tension, thus controlling the force applied to the occupant's chest area.
- In accordance with the ignition signal from the airbag sensor assembly, the seat belt pretensioner activates simultaneously with the deployment of the SRS airbags for the driver and front passenger.
- The passenger seats are provided with ALR (Automatic Locking Retractor)/ELR (Emergency Locking Retractor) seat belts.

2. Seat Belt Pretensioner

General

The pretensioner mechanism mainly consists of a rack, pinion gear, planetary gear, clutch mechanism, and a bobbin.
During the deployment of this pretensioner mechanism, the gas pressure from the gas generator pushes the rack down and retracts the seat belt via the pinion gear, planetary gear, clutch mechanism, and bobbin.

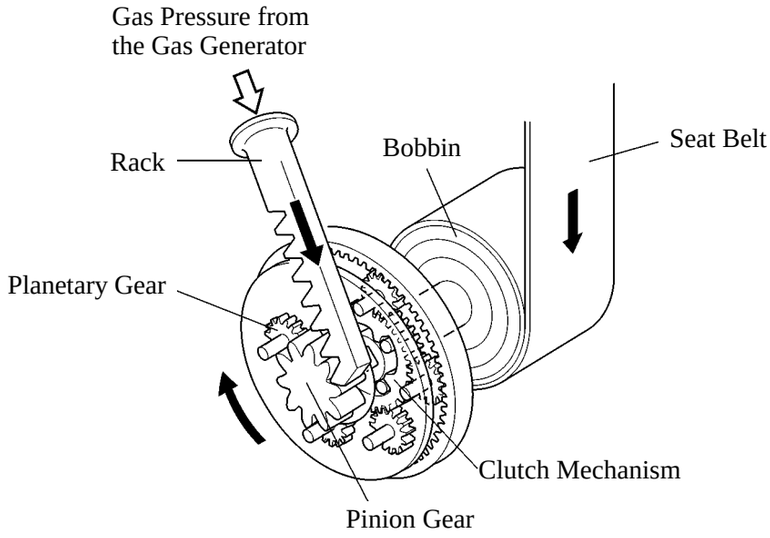

182BO16

3. Seat Belt Force Limiter

The seat belt force limiter mainly consists of an energy absorbing shaft, lock sensor assembly, bobbin, and sleeve.
When the seat belt is pulled out at a rate that exceeds the specified acceleration rate, the ELR (Emergency Locking Retractor) becomes activated, causing the lock sensor assembly to lock the energy absorbing shaft. Because the bobbin on which the seat belt is attached is secured to the energy absorbing shaft via the sleeve, the energy absorbing shaft becomes twisted. The twisting of the energy absorbing shaft causes the bobbin to rotate and the seat belt to be pulled out, thus maintaining the tension that is applied to the seat belt.

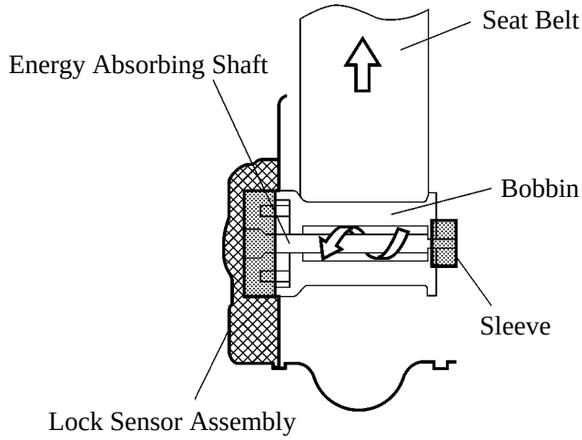

174BO02

BODY ELECTRICAL

AUXILIARY BATTERY

■DESCRIPTION

All the body electrical systems and auxiliary equipment operate using the same 12 V battery used on ordinary gasoline engine vehicles.
However, as the battery structure is different, Prius uses an exclusive battery. See page 42 in the THS (TOYOTA Hybrid System) section for details of the auxiliary battery structure.

MULTIPLEX COMMUNICATION SYSTEM

■DESCRIPTION

- A multiplex communication system has been adopted for body electrical system control and to achieve a slimmer wiring harnesses configuration.
- BEAN (Body Electronics Area Network) has been adopted between the body ECU, ECM, meter ECU, air conditioning ECU, and the gateway ECU. Furthermore, AVC-LAN (Audio Visual Communication-Local Area Network) has been adopted between the display ECU and the audio components.
  The conversion of communication signals between BEAN and AVC-LAN is performed by the gateway ECU.
- UART (Universal Asynchronous Receiver Transmitter), which performs unidirectional communication, has been adopted between the body ECU and the power window master switch.
- A serial data link has been adopted between the body ECU and the door control receiver. In addition, a serial data link has been adopted between the ECM, HV ECU, brake ECU, and the battery ECU, which pertain to the control of the hybrid system.

▶ System Diagram ◀

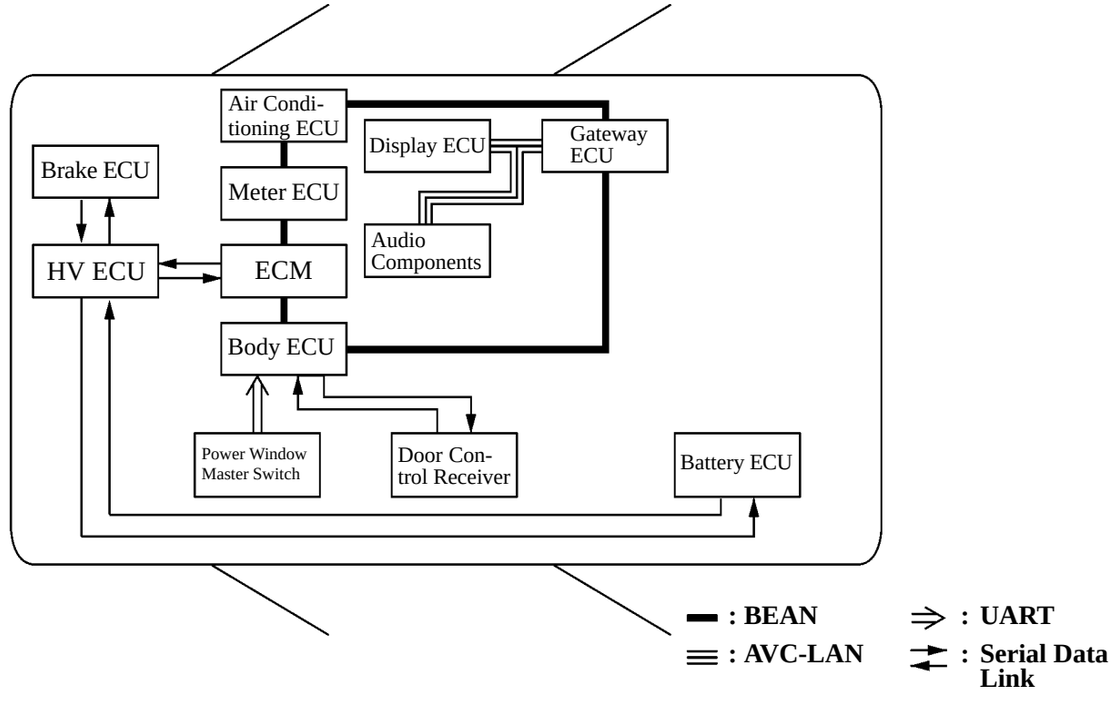

182BE01

■SYSTEM OPERATION

1. General

The ECUs that pertain to the body electrical system perform the functions and system controls described below.

Gateway ECU

- Conversion of data between AVC-LAN and BEAN
- Transmission of vehicle information to the display ECU, in order for it to be displayed on multi-information display

Body ECU

- Power window system control (Front, Rear passenger only)
- Door lock control system control
- Wireless door lock remote control system control
- Theft deferrent system control
- Daytime running light system control
- Illuminated entry system control
- Light auto turn-off system control
- Seat belt warning system control
- Key reminder system control
- Diagnosis

Meter ECU

- Meter control
- Illumination and flashing control of indicator and warning lights
- Sounding control of warning buzzer

Air Conditioning ECU

Air Conditioning control

ECM

- Engine control
- Diagnosis

Display ECU

- Transmission and reception associated with audio and visual functions

2. Gateway Function (Gateway ECU)

This multiplex communication system has adopted BEAN (Body Electronics Area Network) between the body ECU, ECM, meter ECU, air conditioning ECU, and the gateway ECU, as well as AVC-LAN between the display ECU and the audio components. Because the data configuration differs between BEAN and AVC-LAN, their data must be converted in order for them to exchange each other's data. The conversion of communication data is performed by the gateway ECU. As a result, it has become possible for a single communication line to transmit various types of information.

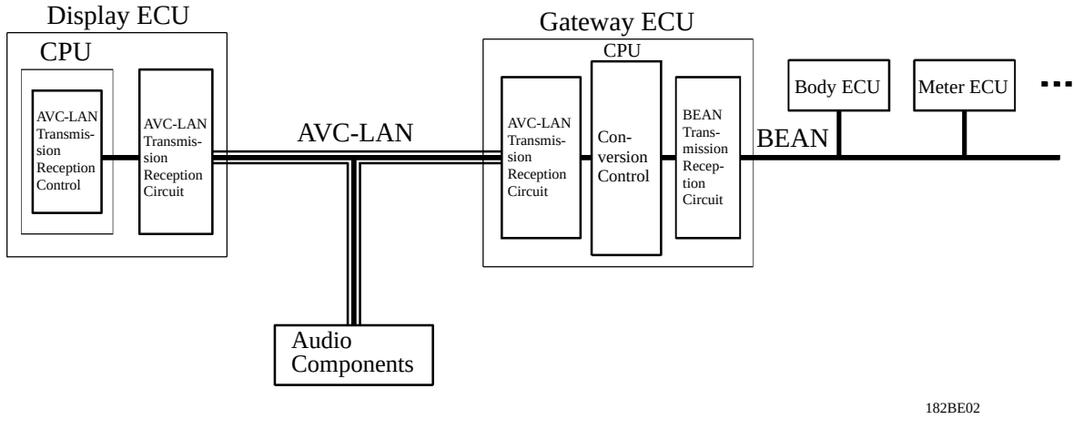

LIGHTING

■HEADLIGHTS

The prius has newly adopted the multi-reflector headlights. Conventional headlights accomplish the dispersion and distribution of the light that is emitted by the bulbs through the lens cut pattern. However, with the multi-reflector type headlights, the light from the bulbs is dispersed and distributed through multiple parabolic shaped reflectors. As a result, the lens cut pattern is no longer provided in the center of the lens, thus realizing a clear look.

▶ Light Distribution Diagram ◀

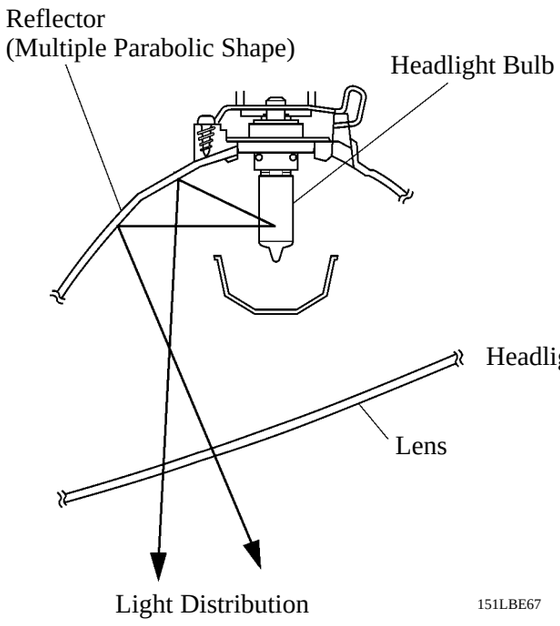

Multi-Reflector Type Headlight

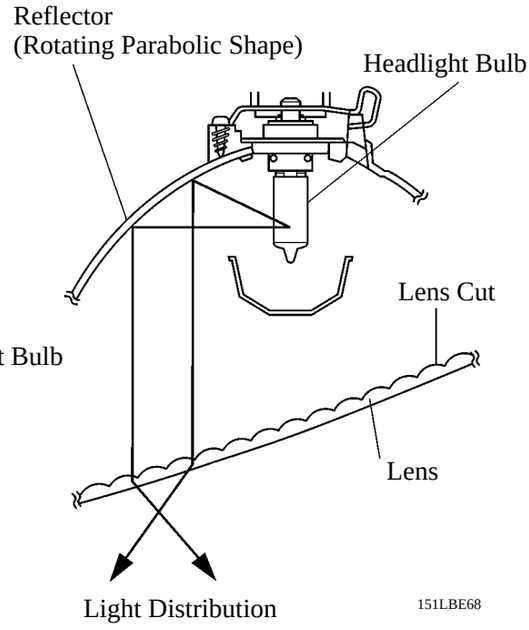

Conventional Headlight

■DAYTIME RUNNING LIGHT SYSTEM

The daytime running light system is adopted for Canada model as standard and U.S.A. model as optional equipment. This system is designed to automatically activate the headlights (dimmed low beams) during the daytime to keep the car highly visible to other vehicles.
This system is controlled by a semi-conductor relay circuit (daytime running light relay).

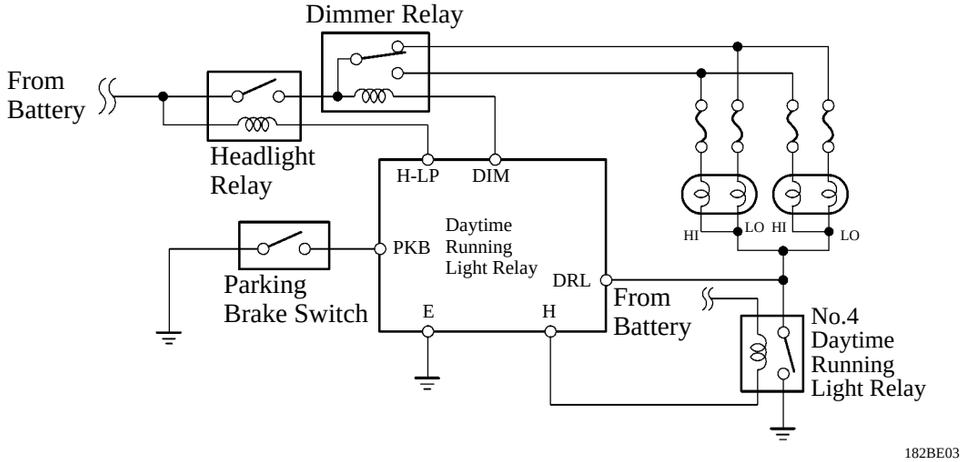

■ILLUMINATED ENTRY SYSTEM

- When a door is unlocked through a key operation or transmitter operation, or if a door is opened or closed, the illuminated entry system turns ON the dome light. If the ignition switch is turned to the ACC or ON position or if all doors are locked during the 15 seconds in which this light are ON, they will immediately turn OFF.
- This system is controlled by the body ECU.

■LIGHT AUTO TURN-OFF SYSTEM

- When the ignition key is turned from ON or ACC to LOCK position and the driver's door is opened with the taillights and headlights on, this system automatically turns them off.
- This system is controlled by the body ECU.

METER

■COMBINATION METER

1. General

- The combination meter is available as a digital display type. It is located at the upper center of the instrument panel to improve its visibility.
- For this combination meter, a meter ECU that effects multiplex communication through the use of BEAN (Body Electronics Area Network) has been adopted.
- The display of the speedometer can be switched between km/h and MPH readings by operating the km/h-MPH selector switch located in the middle of the center cluster. Furthermore, the odo/trip meter can be switched between odometer and tripmeter readings by operating the odo/trip selector/reset switch located in the middle of the center cluster.
- A “READY” light that informs the driver that the vehicle is ready to be driven has been adopted.
- A master warning light that informs the driver if an abnormality occurs in either the EMPS (Electric Motor-assisted Power Steering), HV batteries, or the THS (TOYOTA Hybrid System) has been adopted.
- An output control warning light has been adopted to show the drop of power function due to the output drop of HV batteries.
- For the purpose of making corrections in the calculation of the fuel level by the meter ECU, two inclination sensors that detect the vehicle’s longitudinal and latitudinal inclinations have been provided in the meter ECU. In addition, an outer ambient temperature sensor has been provided in the fuel tank to detect the temperature in the fuel tank.



U.S.A. Model

182BE04



Canada Model

182BE16

2. Construction and Operation

Speedometer

- The speedometer is displayed digitally through the VFD (Vacuum Fluorescent Display). It can be switched between the km/h and MPH readings by operating the km/h-MPH selector switch located in the middle of the center cluster.
- The vehicle speed signal, which originates at the speed sensor that is installed in the hybrid transaxle, travels via the HV ECU and ECM (BEAN) and is received by the meter ECU.

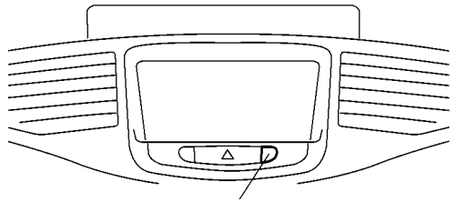

Km/h-MPH Selector Switch

182BE05

Odo/Trip Meter

Similar to the speedometer, the odo/trip meter is displayed digitally through the VFD (Vacuum Fluorescent Display). By operating the odo/trip selector/reset switch located in the middle of the center cluster, its display can be switched in the following sequence: odometer → trip meter A → trip meter B.

While trip meter A or B is displayed, pressing the odo/trip selector/reset switch 0.8 seconds or longer causes the driven distance displayed by the current trip mode to revert to 0.0 mile or 0.0 km.

The trip meter will resume measuring the distance at the moment the odo/trip selector/reset switch is released.

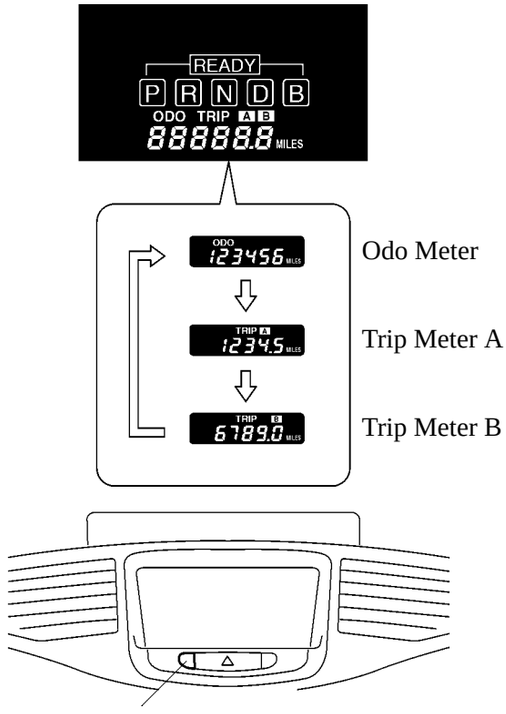

Odo/Trip Selector/Reset Switch

182BE06

Fuel Gauge

For the purpose of correcting the calculation of the fuel level by the meter ECU, two inclination sensors that detect the vehicle's longitudinal and latitudinal inclinations have been provided in the meter ECU, and an ambient temperature sensor has been provided in the fuel tank to detect the temperature in the fuel tank. The fuel level is calculated by the meter ECU in accordance with the signals of the sender gauge located in the sub tank that have been received via the body ECU, and the fuel injection signals received from the ECM. At this time, corrections are made by the signals from the inclination sensors that detect the vehicle's longitudinal and latitudinal inclinations and the ambient temperature sensor that detects the temperature in the fuel tank.

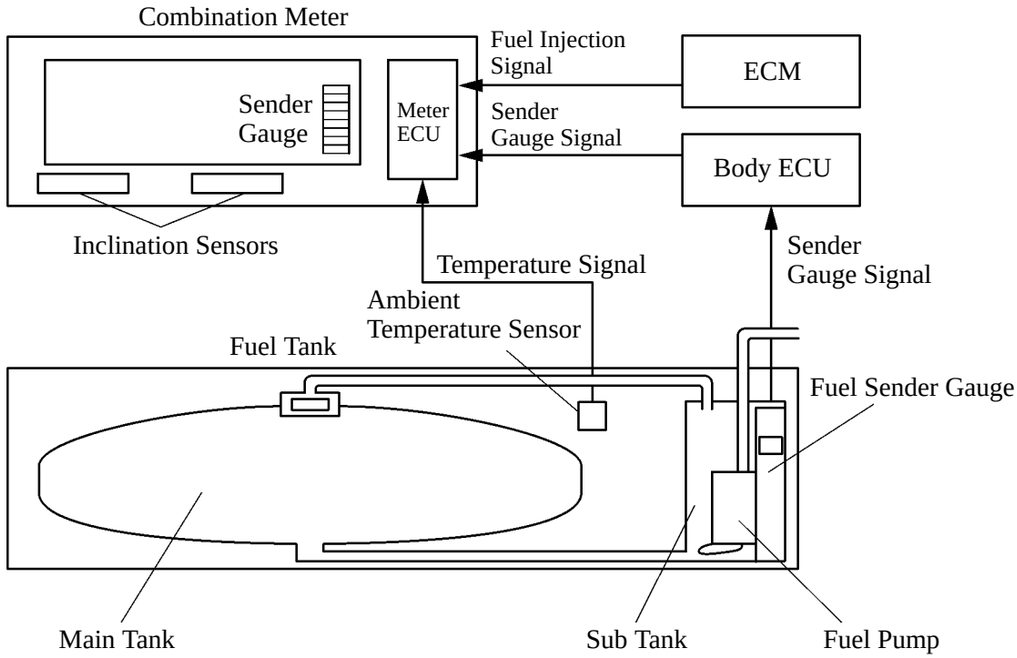

“READY” Light

When the shift position is P, turning the ignition switch to START causes the “READY” light to flash and enables the vehicle to be driven. Then, this indicator illuminates and the buzzer sounds simultaneously.

Flashes when the ignition switch is turned to START



Illuminates when the vehicle is ready to be driven



182BE08

Service Tip

If the indicator does not illuminate, the vehicle cannot be driven because one of the driving prohibition conditions listed below applies.

- Service plug disconnected.
- Hybrid system abnormality.
- Driving prohibition condition due to overload on MG1, MG2 or inverter.
- Inverter unit cover is left open.
- HV ECU has detected a collision.

Master Warning Light

A master warning light that informs the driver if an abnormality occurs in either the EMPS, HV batteries, or the THS has been adopted.
If an abnormality occurs in the system, the master warning light illuminates and the multi-information display shows the warning items. For details, see page 178.

Output Control Warning Light

An output control warning light has been adopted to show the drop of power function due to the output drop of HV batteries.
This warning light comes on when the temperature of HV batteries is higher or lower than that of specified range, or when SOC (State of Charge) is lower than the specified value with the shift position in R range. When this warning light comes on, avoid sudden acceleration and drive carefully.

WIPER

■TELESCOPIC WIPER

1. General

- The telescopic wiper has been adopted.
- The telescopic wiper consists of a wiper arm for the front passenger side that wipes telescopically from the stopped position to the upper return position in order to enlarge the wiping area.

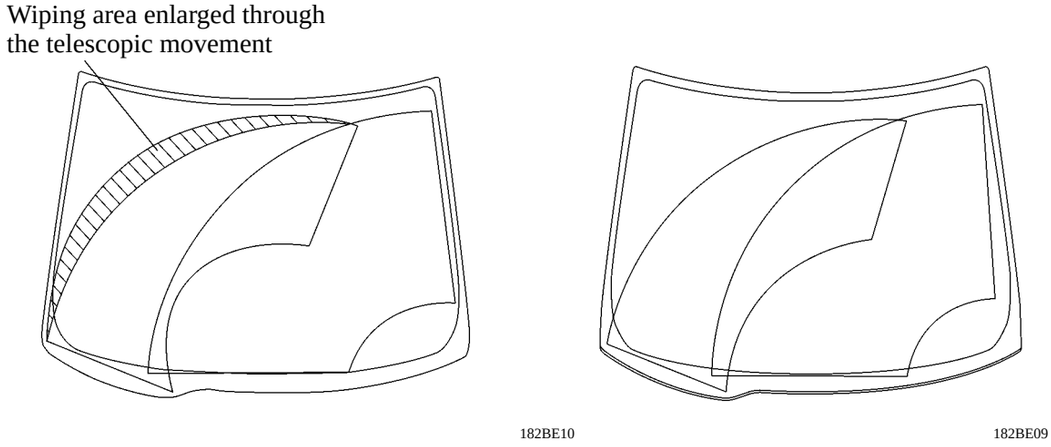

Telescopic Type **Conventional Type**

2. Construction

The telescopic wiper mainly consists of a driver wiper arm, passenger wiper arm, main lever, idle lever, wiper link and wiper motor.

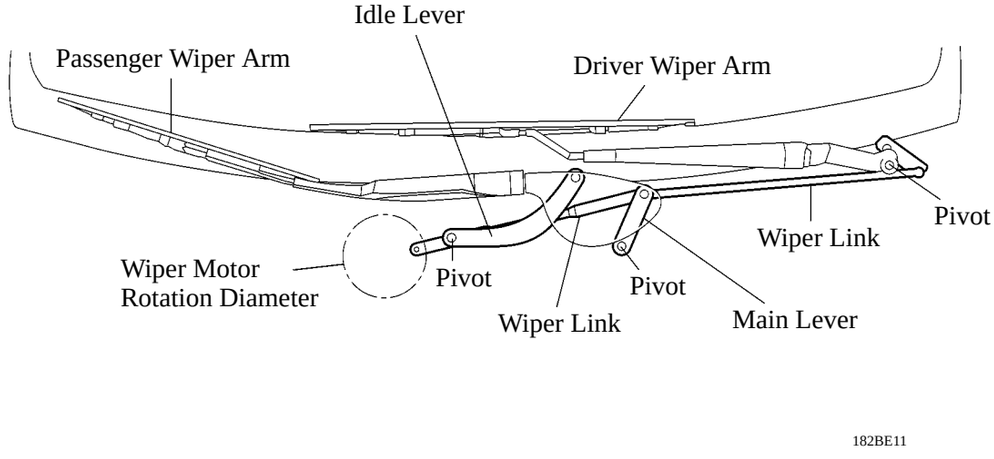

3. Operation

- With the rotation of the wiper motor, the wiper link for driving wiper will operate and connection point P_1 with the main lever will move toward the arrow mark by the influence of the wiper link with a pivot as a supporting point. With this, the connection point P_2 between the wiper arm and the idle lever becomes the supporting point of the pry and starts wiping by holding the arm upward.

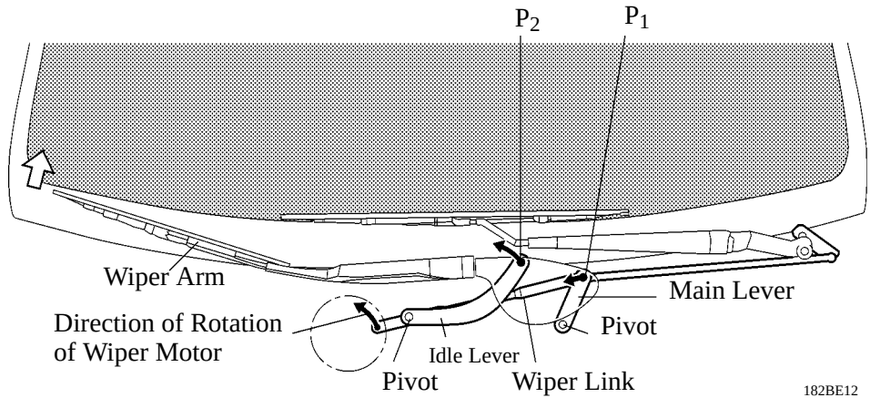

- In addition, when the wiper motor rotates, P_1 and P_2 will move toward the arrow mark.
  Then, the wiper arm with P_3 as a supporting point will rise by the influence of the idle arm as if expanding upward to the left. With this, it enables to wipe wider range.

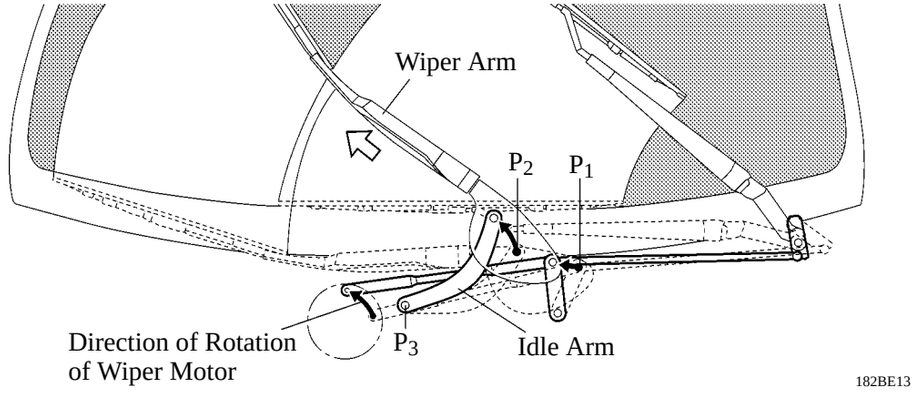

- When the wiper motor rotates more, P_1 and P_2 will move toward the arrow mark. The wiper arm with P_2 as a supporting point will move toward contracting direction and wipe further to the upper reversal position.

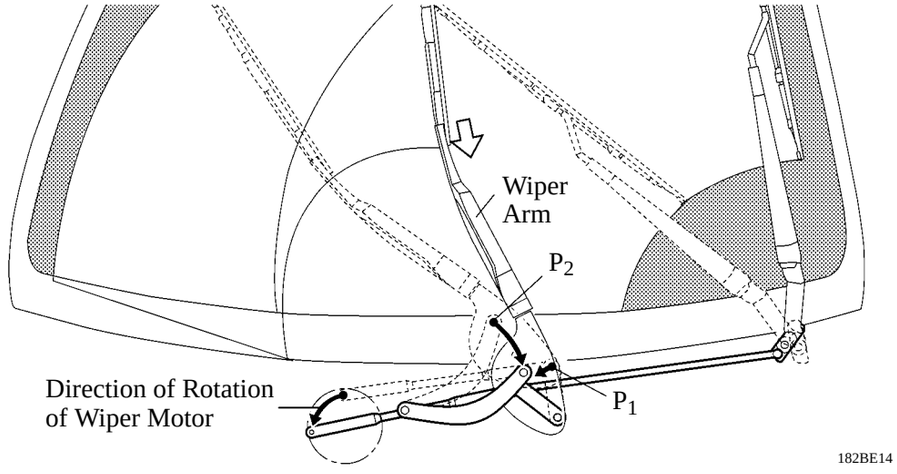

AIR CONDITIONING

■DESCRIPTION

The air conditioning system in the Prius has the following features:

- Both heating and demisting performances are realized by adopting performances are realized by adopting the 2-way flow heater type air conditioning unit.
- A multi-tank, super-slim structure evaporator has been adopted.
- An automatic air conditioning system which provides enhanced air conditioning comfort according to the occupant's senses has been adopted.
- A semi-center location air conditioning unit, in which the evaporator and heater core are placed in the vehicle's longitudinal direction, has been adopted.
- A compact, high-performance scroll compressor with oil separator has been adopted.
- The heat exchange efficiency has been improved through the adoption of the sub-cool condenser.
  This condenser is integrated with the radiator to minimize the space they occupy in the engine compartment.
- A compact, lightweight, and highly efficient straight flow (full-path flow) aluminium heater core has been adopted.
  This heater core is integrated with a PTC (Positive Temperature Coefficient) heater, which excels in heating performance.
- PTC heaters have been provided in the air duct at the footwell outlet in front of the air conditioning unit. However, air conditioning without the PTC heaters is offered as an option on the U.S.A. models.
- An electrical water pump with a bypass valve that provides a stable heater performance even if the engine is stopped due to a function of the THS (TOYOTA Hybrid System) has been adopted.
- A clean air filter that excels in removing pollen and dust is standard equipment.

▶ Performance ◀

Item			Performance
Heater	Heat Output	W	5300
	Air Flow Volume	m^3/h	330
	Power Consumption	W	170
Heater Core Integrated PTC Heater	Heat Output	W	330 (165 x 2)
PIC Heater*1	Heat Output	W	165 x 2
Air Conditioning	Heat Output	W	4200*2
	Air Flow Volume	m^3/h	450
	Power Consumption	W	200

*1: U.S.A. Cold Area Specification Model and Canada Model
*2: When the compressor is at 1,800 rpm

▶ Specifications ◀

Item				Specifications	
Ventilation and Heater	Heater Core	Type		Straight Flow (Full-path Flow)	
		Size W x H x L	mm (in.)	216.9 x 140 x 27 (8.5 x 5.5 x 1.1)	
		Fin Pitch	mm (in.)	1.8 (0.07)	
	Blower	Motor Type		S70F-13T	
		Fan Size Dia. x H	mm (in.)	External Air	132 x 41 (5.2 x 1.6)
				Internal Air	150 x 36 (5.9 x 1.4)
Air Conditioning	Condenser	Type		Multi-Flow Type (Sub-Cool Type)	
		Size W x H x L	mm (in.)	600 x 349.8 x 37.5* (23.6 x 13.8 x 1.5)	
		Fin Pitch	mm (in.)	2.8 (0.11)	
	Evaporator	Type		Drawn Cup (Multi-tank, Super Slim Structure)	
		Size W x H x L	mm (in.)	253.2 x 215 x 58 (10.0 x 8.5 x 2.3)	
		Fin Pitch	mm (in.)	3.5 (0.14)	
	Compressor	Type		SCS06	

*: With the radiator

■CONSTRUCTION AND OPERATION

1. Air Conditioning Unit

Air Conditioning Assembly

1) General

- A semi-center location air conditioning unit, in which the multi tank type evaporator and straight flow heater core are placed in the vehicle's longitudinal direction, has been adopted.
- Both heating and demisting performances are realized by adopting the 2-way flow heater type air conditioning unit.
  This unit, which introduces external air and internal air simultaneously, discharges warm internal air to the footwell area, and the fresh, dry external air to the upper area. Thus, it realizes both excellent heating performance and demisting performance.

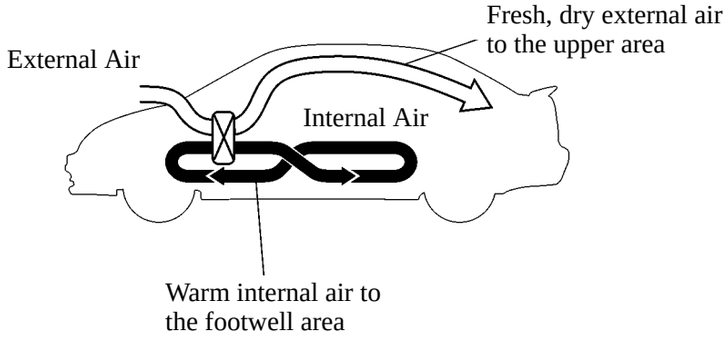

2) Construction

A partition plate divides the inside of the air conditioning unit into two parts, the external air passage, and the internal air passage. Thus, by controlling the external air door and the internal air door separately, the external air and internal air are introduced into the cabin in the following three modes: fresh-air mode, recirculation mode, and fresh-air/recirculation (2-way flow) mode.

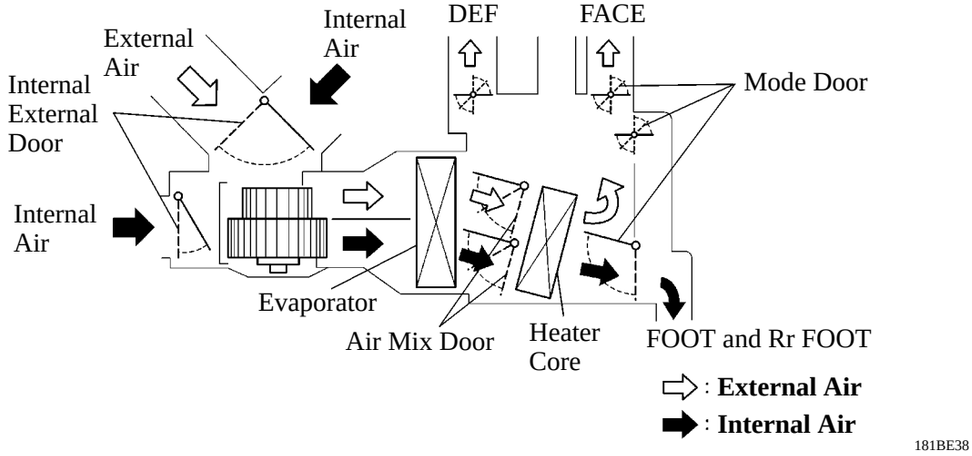

Airflow During 2-way Flow Control

3) 2-Way Flow (Fresh-air/Recirculation) Mode

When all the conditions listed below are met, the external air door, internal air door, which are controlled by the air conditioning ECU, are switched to the 2-way flow mode.

- External air mode in the selected state
- Blower switch in the ON state (except OFF)
- Tentative air mix damper opening angle is above the specified value. (MAX HOT)
- Mode select switch in either FOOT or FOOT/DEF state

Heater Core and PTC Heater

1) General

- A compact, lightweight, and highly efficient straight flow (full-path flow) aluminum heater core has been adopted.

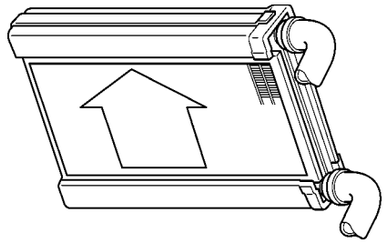

New (Straight Flow) 152BE21

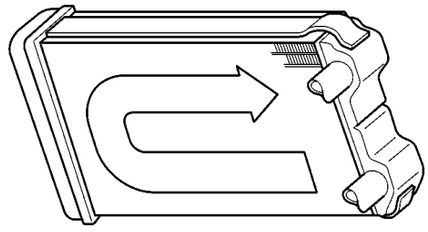

Previous (U-turn Flow) 152BE22

- The 2 PTC (Positive Temperature Coefficient) heaters have been built into the heater core.

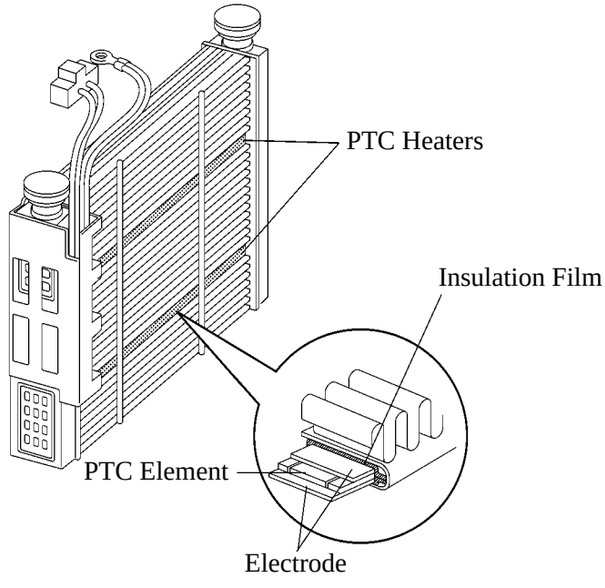

165BE18

- PTC heaters have been provided in the air duct at the footwell outlet in front of the air conditioning unit. However, air conditioning without the PTC heaters is offered as an option on the U.S.A. models.
  This PTC heater, which is a honeycomb-shaped PTC thermistor, directly warms the air that flows in the duct.

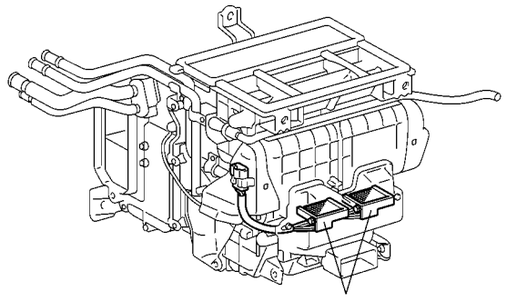

182BE17

▶ Wiring Diagram ◀

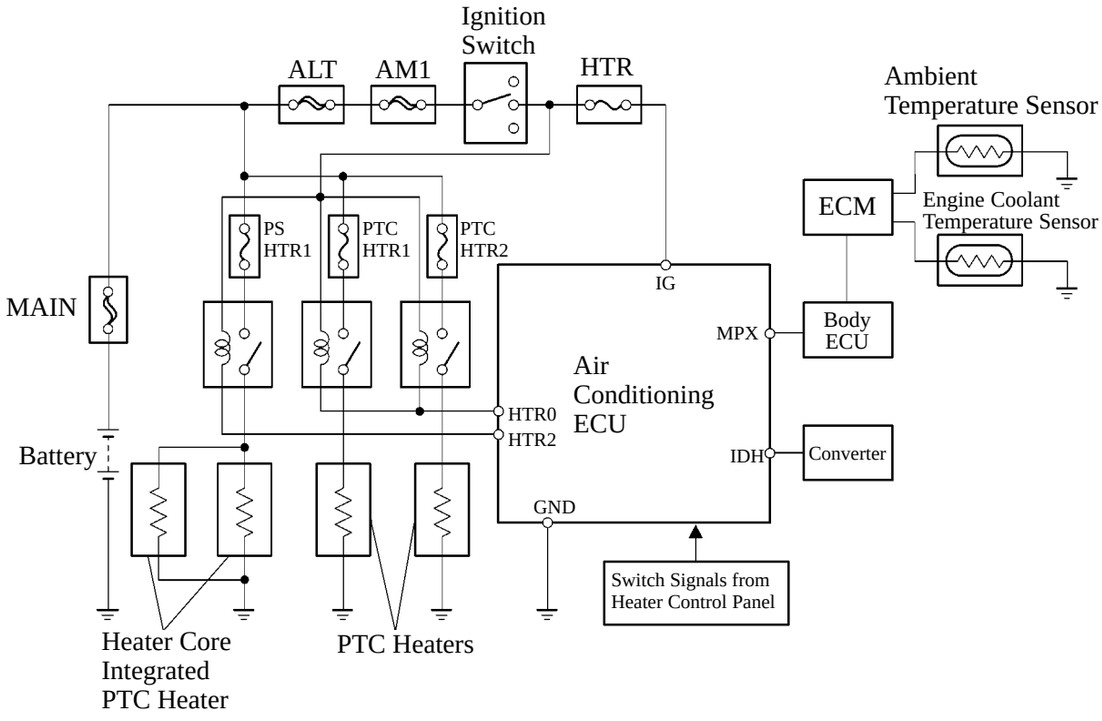

182BE18

2) Operation

a. Heater Core Integrated PTC Heater Model

The heater turns ON when all the conditions listed below have been met.

i) Outlet is in the DEF mode:

- Coolant temperature is below the specified value.
- Ambient temperature is below the specified value.
- Converter's PTC heater prohibition signal is OFF.

ii) Outlet is in the FOOT or FOOT/DEF mode:

- Coolant temperature is below the specified value.
- Tentative air mix damper opening angle is above the specified value. (MAX HOT)
- Converter's PTC heater prohibition signal is OFF.

b. Heater Core Integrated PTC Heater and PTC Heater Model

In the case of the heater core integrated PTC heater and PTC heater model, the conditions under which the heater core integrated PTC heater operates are the same as those for the heater core integrated PTC heater model described above. Furthermore, in the heater core integrated PTC heater and PTC heater model, the PTC heater turns ON when all the conditions listed below have been met.

- Outlet is in the FOOT or FOOT/DEF mode.
- Blower switch in the ON state.
- Coolant temperature is below the specified value.
- Tentative air mix damper opening angle is above the specified value. (MAX HOT)
- Converter's PTC heater prohibition signal is OFF.

Evaporator

By placing the tanks at the top and the bottom of the evaporator unit and by adopting an inner fin construction, the heat exchanging efficiency has been improved and the evaporator unit's temperature distribution has been made more uniform. As a result, it has become possible to realize a thinner evaporator construction. Furthermore, the evaporator body has been coated with a type of resin that contains an antibacterial agent in order to minimize the source of foul odor and the propagation of bacteria.

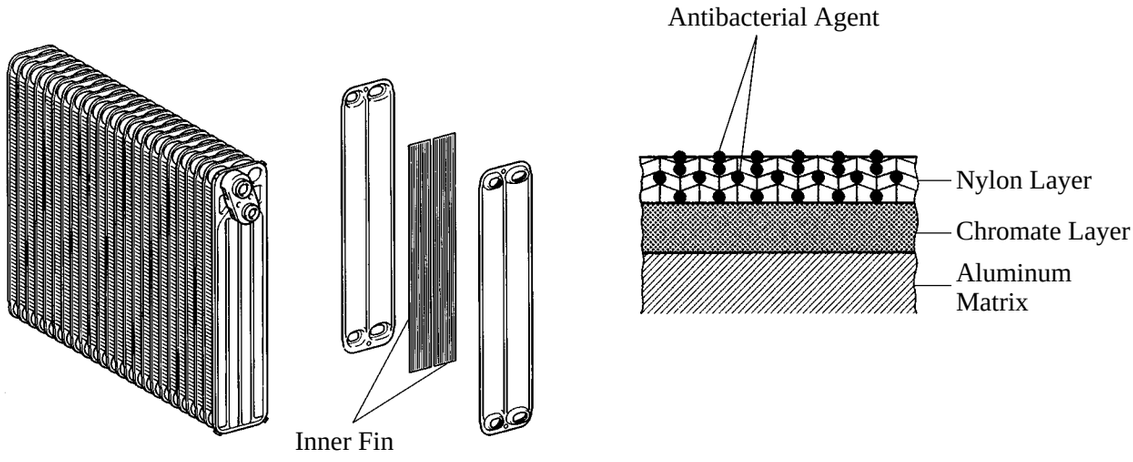

2. Condenser

The Prius has adopted sub-cool condenser in which a multi-flow condenser (consisting of two cooling portions: a condensing portion and a super-cooling portion) and a gas-liquid separator (modulator) have been integrated. This condenser has adopted the sub-cool cycle for its cooling cycle system to improve the heat exchanging efficiency.
This condenser is integrated with the radiator to minimize the space they occupy in the engine compartment. For details, see page 54 in the Engine Cooling System Section.

Sub-Cool Cycle

In the sub-cool cycle of the sub-cool condenser that has been adopted, after the refrigerant passes through the condensing portion of the condenser, both the liquid refrigerant and the gaseous refrigerant that could not be liquefied are cooled again in the super-cooling portion. Thus, the refrigerant is sent to the evaporator in an almost completely liquefied state.

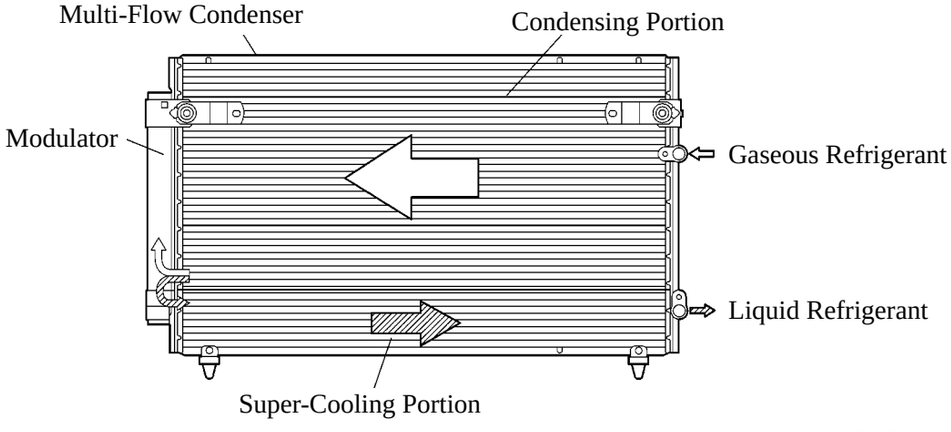

NOTE: The point at which the air bubbles disappear in the refrigerant of the sub-cool cycle is lower than the proper amount of refrigerant with which the system must be filled. Therefore, if the system is recharged with refrigerant based on the point at which the air bubbles disappear, the amount of refrigerant would be insufficient. As a result, the cooling performance of the system will be affected.
For the proper method of verifying the amount of the refrigerant and to recharge the system with refrigerant, see the 2001 Prius Repair Manual (Pub. No.RM778U).

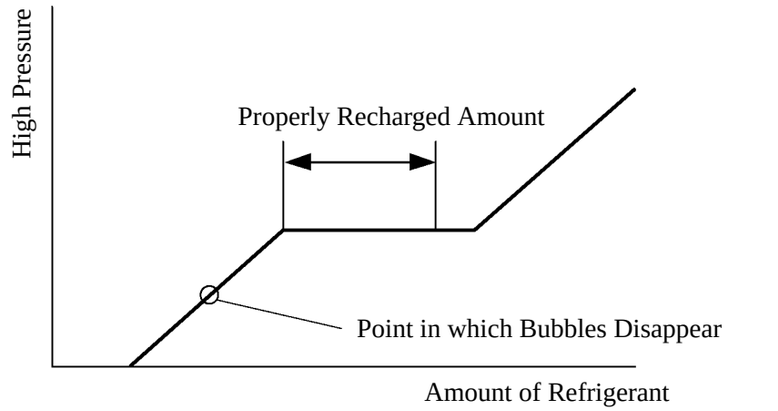

152BE40

3. Compressor

General

A compact and high performance scroll compressor with oil separator has been adopted.

Construction

The scroll compressor with oil separator consists of a spirally wound fixed scroll and variable scroll that form a pair, and oil separator, and a magnetic clutch.
The fixed scroll is integrated with the housing. Because the rotation of the shaft causes the variable scroll to revolve while maintaining the same posture, the volume of the space that is partitioned by both scrolls varies to perform the suction, compression, and the discharge of the refrigerant gas.
A pin is attached behind the variable scroll to prevent the autorotation of the variable scroll, allowing it only to revolve.
Locating the suction port directly above the scrolls enables direct suction, thus realizing improved suction efficiency.
Containing a built-in oil separator, this compressor is able to separate the compressor oil that is intermixed with the refrigerant and circulates in the refrigeration cycle, thus realizing a reduction in the oil circulation rate.

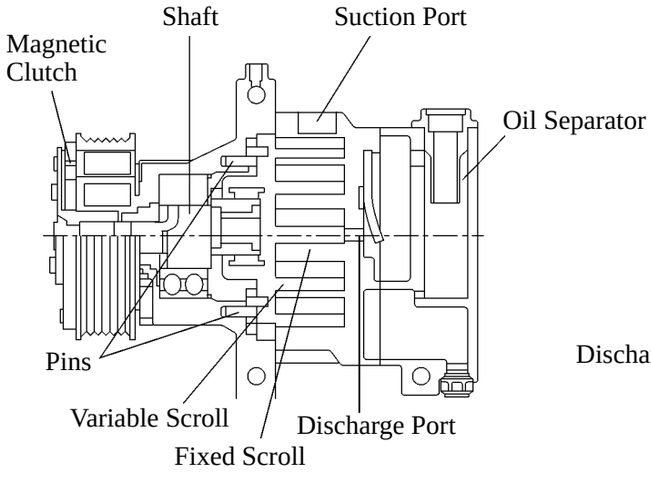

165BE21

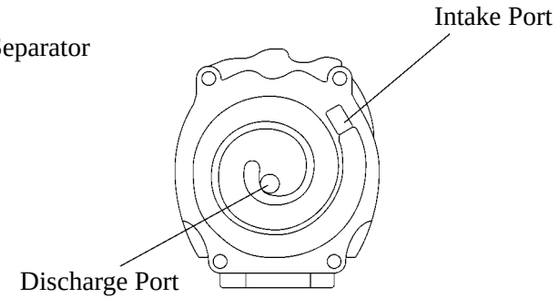

Fixed Scroll

165BE22

Operation

1) Suction

As the capacity of the compression chamber, which is created between the variable scroll and the fixed scroll, increases in accordance with the revolution of the variable scroll, refrigerant gas is drawn in from the intake port.

2) Compression

From the state at which the suction process has been completed, as the revolution of the variable scroll advances further, the capacity of the compression chamber decreases gradually. Consequently, the refrigerant gas that has been drawn in becomes compressed gradually and is sent to the center of the fixed scroll. The compression of the refrigerant gas is completed when the variable scroll completes approximately 2 revolutions.

3) Discharge

When the compression of the refrigerant gas is completed and the refrigerant pressure becomes high, the refrigerant gas discharges through the discharge port located in the center of the fixed scroll by pushing the discharge valve.

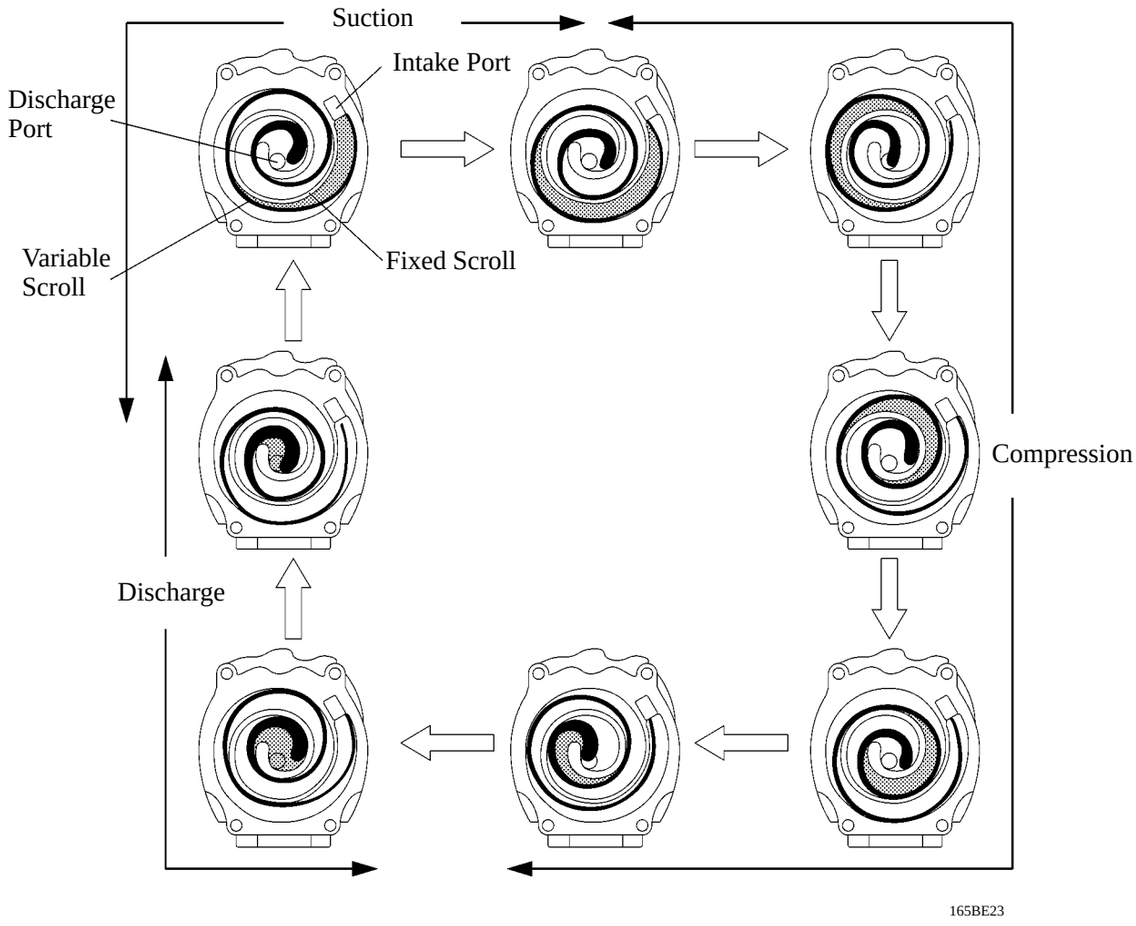

Oil Separator

1) General

A CS (Centrifugal with Shutter) type oil separator has been adopted to reduce the circulation rate of the compressor oil that is intermixed with the refrigerant and circulates in the refrigeration cycle.
This oil separator is provided with a cylindrical pipe in the separator case, enabling the refrigerant gas that has been discharged through the discharge gas inlet to be separated into refrigerant gas and oil through centrifugal force, and minimizing the outflow of the oil to the discharge service port. As a result, the oil circulation rate has been reduced and makes energy savings possible.

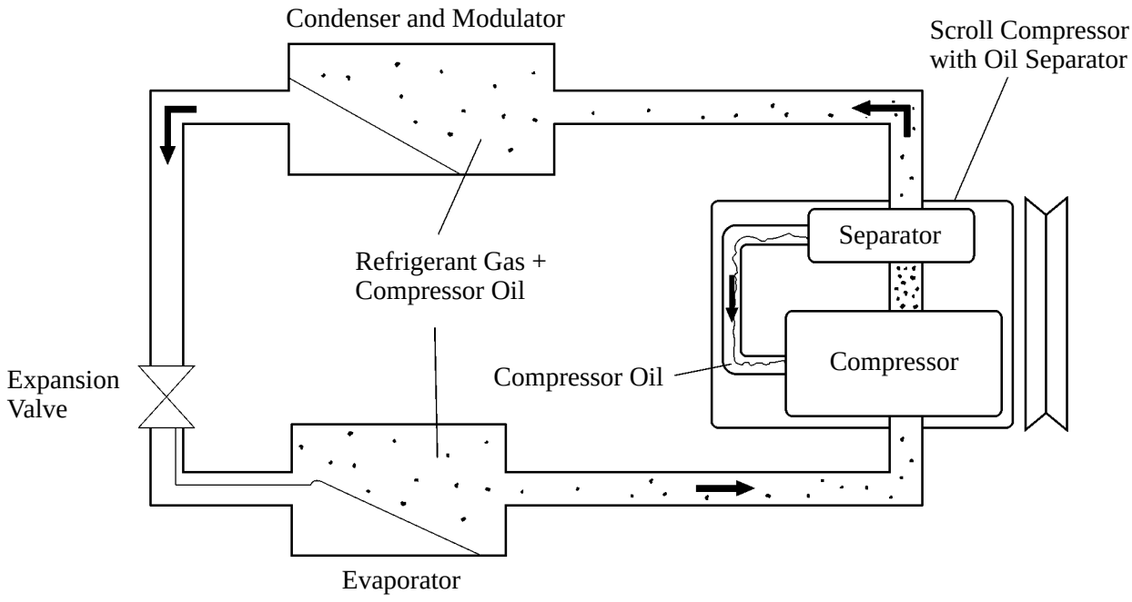

2) Construction and Operation

The refrigerant gas that is discharged from the discharge port flows by rotating around the cylindrical pipe in the oil separator. At this time, the centrifugal force that is created during the rotation separates the refrigerant gas and the compressor oil due to the difference in their specific gravity. The refrigerant gas with the lighter specific gravity passes through the inside of the pipe and travels from the discharge service port to the outside of the compressor. The compressor oil with the heavier specific gravity is discharged through the oil discharge hole in the shutter and is stored in the oil storage chamber. Then, the compressor oil is fed again into the compressor and circulates inside the compressor.

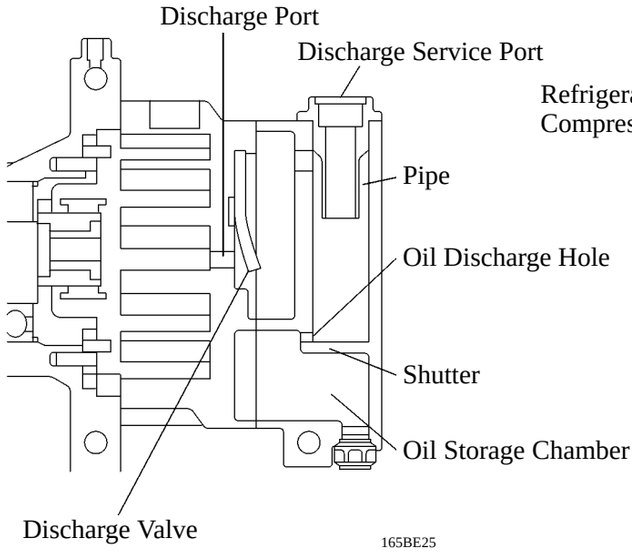

165BE25

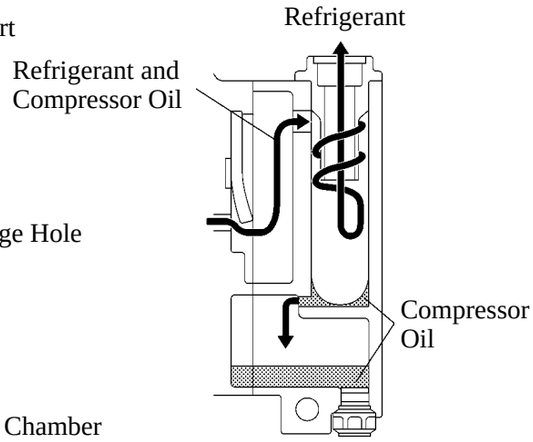

165BE26

4. Water Pump (For Air Conditioning)

An electrical water pump with a bypass valve that provides a stable heater performance even if the engine is stopped due to a function of the THS has been adopted.
When the engine is running, this water pump ceases its operation and opens the bypass valve to minimize the flow resistance of the coolant that is pumped by the engine water pump.

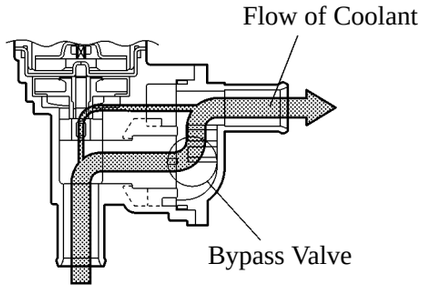

Water Pump OFF
(Engine ON)

182BE19

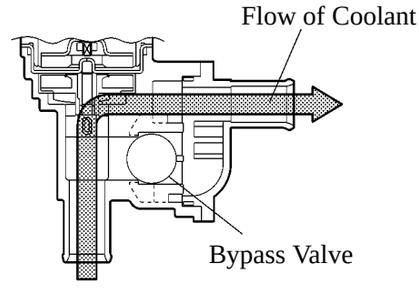

Water Pump ON
(Engine OFF)

182BE20

5. Clean Air Filter

A clean air filter that excels in removing pollen and dust is standard equipment.
This filter, which cleans the air in the cabin, is made of polyester. Thus, it can be disposed of easily as a combustible material, a feature that is provided in consideration of the environment.
To facilitate the replacement of the filter, a one-touch clip is used in the filter cover which is unified with filter case. Thus, a construction that excels in serviceability has been realized.

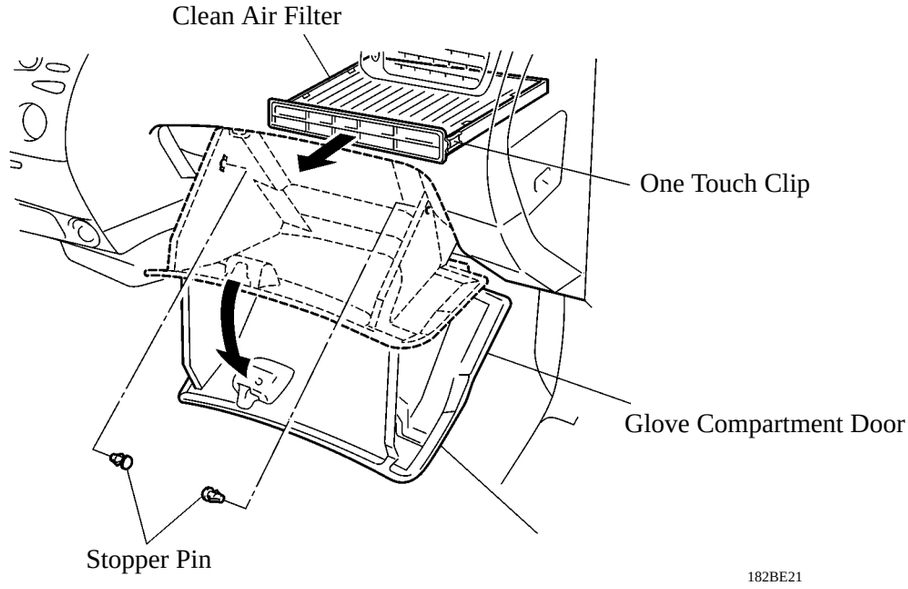

Service Tip

The replacement interval for the clean air filter is 30,000 km or 2 years.
However, it varies with the use conditions (or environment).

6. Air Conditioning ECU

General

- An automatic control type air conditioning has been adopted. This system uses an air conditioning ECU to perform the calculation of the required outlet air temperature control, temperature control, blower control, air inlet control, air outlet control, and compressor control.
  The information that is necessary for effecting the controls are the signals from the room temperature sensor, evaporator temperature sensor, and solar sensor that are directly transmitted to the air conditioning ECU, and the signals from the ambient temperature sensor and the engine coolant temperature sensor that are transmitted via the ECM. These signals are calculated by the air conditioning ECU to effect the proper control.

▶ System Diagram ◀

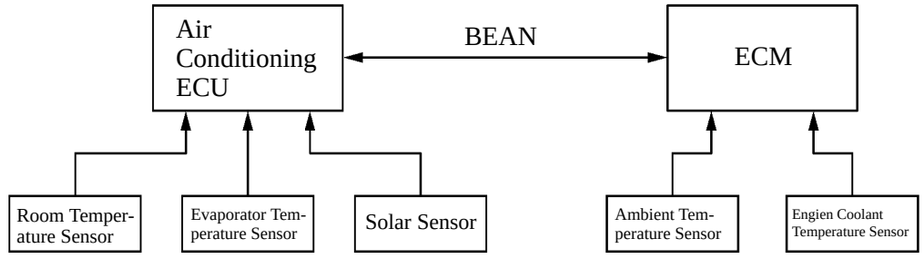

182BE22

Sensors

1) Ambient Temperature Sensor

The ambient temperature sensor has been provided on the left, in front of the condenser. The signals from this sensor are transmitted to the air conditioning ECU via the ECM.

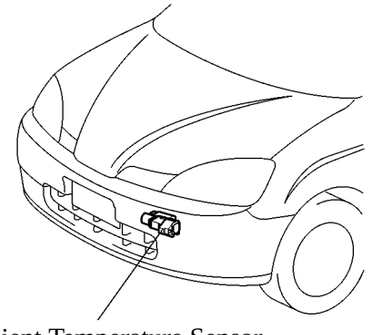

Ambient Temperature Sensor

182BE23

2) Room Temperature Sensor

The room temperature sensor has been provided inside the instrument finish lower panel.
The signals from this sensor are directly transmitted to the air conditioning ECU.

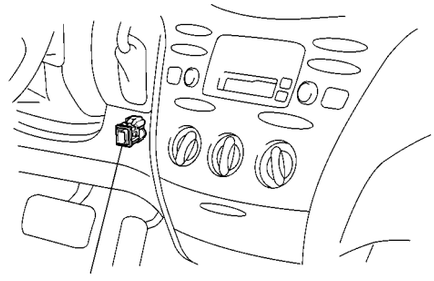

3) Evaporator Temperature Sensor

The evaporator temperature sensor has been provided behind the evaporator in the air conditioning unit.
The signals from this sensor are directly transmitted to the air conditioning ECU.

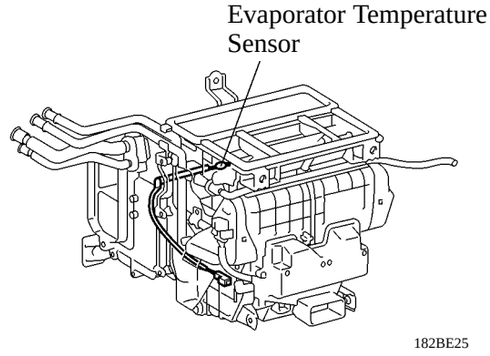

4) Solar Sensor

The solar sensor has been provided on top of the instrument panel.
The signals from this sensor are directly transmitted to the air conditioning ECU.

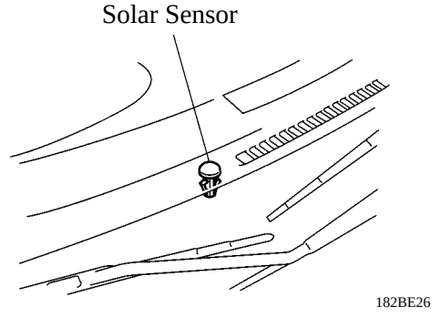

5) Engine Coolant Temperature Sensor

The water temperature sensor has been provided on the water outlet area on the left side of the engine.
The signals from this sensor are transmitted to the air conditioning ECU via the ECM.

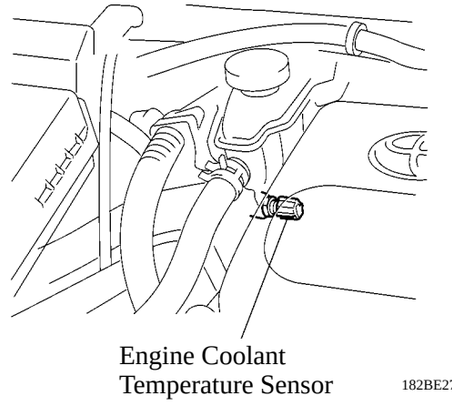

Calculation of Required Outlet Air Temperature (TAO: Temperature Air Outlet)

After receiving the signals from the sensors and the temperature control switch setting, the air conditioning ECU uses the formula shown below to calculate the required outlet air temperature, to regulate the servomotors and blower motor. This is an outlet air temperature that is required in maintaining the set temperature in a stable manner.

$$TAO = K_{SET} \times TSET - Kr \times TR - K_{AM} \times TAMdisp - Ks \times TS + C - TC$$

K_{SET}	= Setting Temperature Coefficient	TSET	= Setting Temperature
Kr	= Room Air Temperature Coefficient	TR	= Room Air Temperature
K_{AM}	= Ambient Air Temperature Coefficient	TAMdisp	= Ambient Air Temperature
Ks	= Solar Radiation Coefficient	TS	= Solar Radiation
C	= Correct Constant	TC	= Compressor ON/OFF Correct Constant

Temperature Control System

1) Air Mix Damper Control

In response to the temperature control switch setting, the required ambient temperature, evaporator temperature sensor, and engine coolant temperature sensor compensations are used by the air mix damper control to calculate a tentative damper opening angle, through an arithmetic circuit in the air mix damper, to arrive at a target damper opening angle.

▶ Calculating the Target Damper Opening ◀

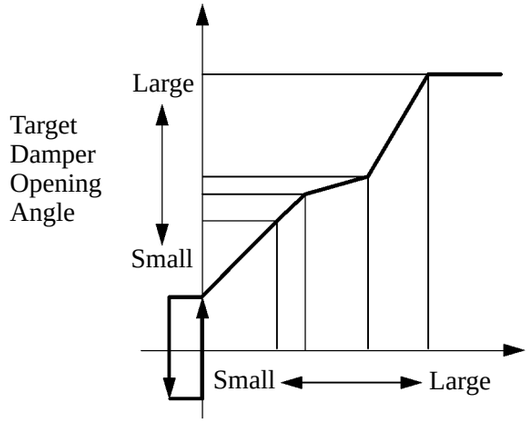

182BE50

Blower Control System

1) Blower Motor Startup Control

When the blower motor is started up, the blower voltage in the auto mode (low speed) is output to the blower controller for 3 seconds. This is designed to protect the blower controller from a sudden startup current surge.

2) Manual Control

Sets the blower speed according to operation of the blower switch.

3) Automatic Control

a. Stepless Air Volume Control

As shown on the right, when the AUTO switch on the heater control panel is pushed, the air conditioning ECU automatically regulates the voltage to the blower controller, in accordance with the required outlet air temperature, to deliver stepless air volume.

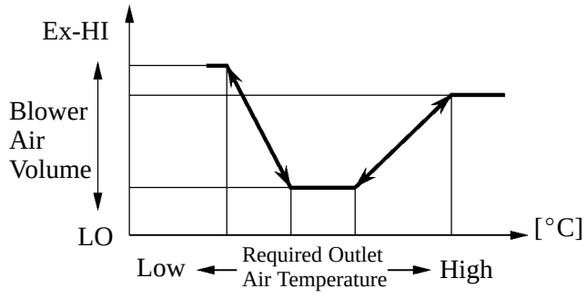

b. Warm-Up Control

When the coolant temperature detected by the engine coolant temperature sensor is below a predetermined level and the air outlet is in the FOOT or BI-LEVEL mode, the blower does not operate. When the coolant temperature reaches specified temperature (b), the blower motor operates at low speed. When the coolant temperature is between specified temperature (b) to (c), the air flow calculation using the engine coolant temperature sensor signal, and, the air flow calculation using the required outlet air temperature are compared, and the lesser of the two is automatically selected as the air flow to be used. When the coolant temperature reaches specified temperature (c) or more, the blower motor runs at high speed. Moreover, when the coolant temperature is under specified temperature (a), and the warm-up control is effected (blower motor off), the air outlet is switched to the DEF mode. Later, when the blower motor turns on, the air outlet changes from the DEF mode to the FOOT or BI-LEVEL mode.

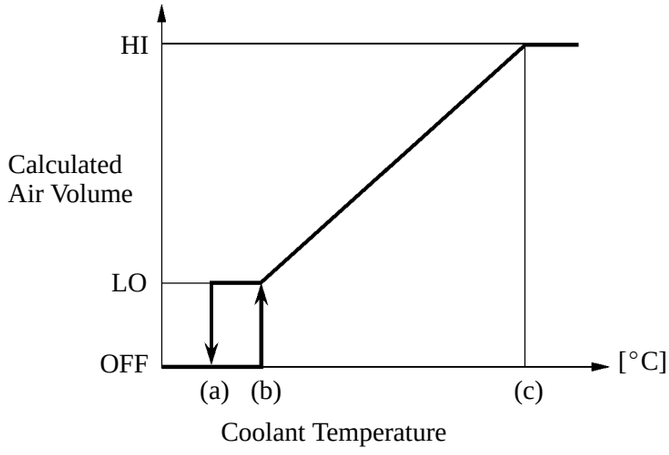

c. Time-Lagged Air Flow Control

2 types of time-lagged air flow control (in accordance with the temperature detected by the evaporator temperature sensor) help prevent hot air from being emitted from FACE or BI-LEVEL vent.

i) Evaporator temperature sensor at specified temperature or more

As shown in the diagram on the right, this control turns OFF the blower motor for approximately specified time (a) and turns ON the compressor to cool the air conditioning unit.
After approximately specified time (a) have elapsed, the blower motor rotates in the manual LO mode, allowing the cooled air to be discharged from the vents. Thus, the discomfort that is associated with the discharge of warm air is prevented.
Between approximately specified time (b) to (c), the airflow volume according to the timelagged airflow control and the airflow volume of the blower control according to the calculation of the required outlet air temperature are compared. The airflow volume is then regulated at the smaller volume of the two.
After specified time (c) have elapsed, control is effected by the blower control according to the calculation of the required outlet air temperature.

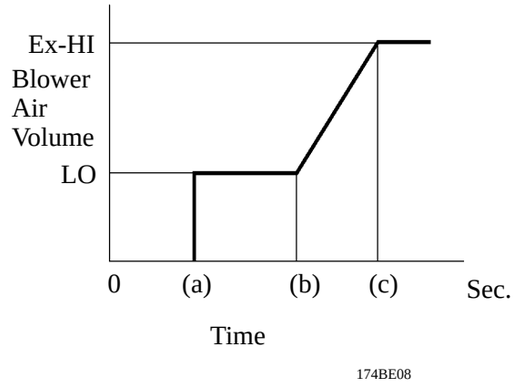

ii) Evaporator temperature sensor at specified temperature or less

As shown in the diagram on the right, for approximately specified time (a), the blower motor rotates in the manual LO mode.
Thereafter, up to approximately specified time (b), the airflow volume according to the time-lagged airflow control and the airflow volume according to the blower control of the calculation of the required outlet air temperature are compared. The airflow volume is then regulated at the smaller volume of the two.
After specified time (b) have elapsed, control is effected based on the blower control according to the calculation of the required outlet air temperature.

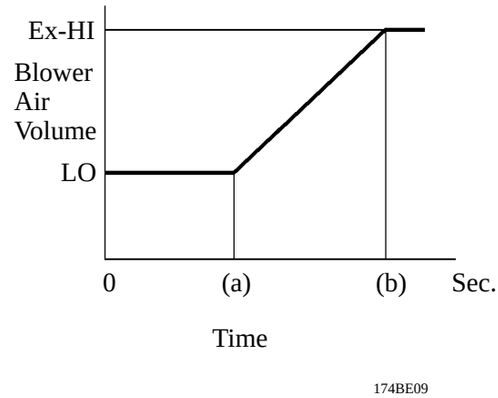

d. Sunlight Air Flow Control

Controls the blower speed in accordance with the intensity of the sunlight when the air outlet mode is at FACE or BI-LEVEL. The blower low speed can be adjusted up to 4 steps, in response to the sunlight signal received from the solar sensor.

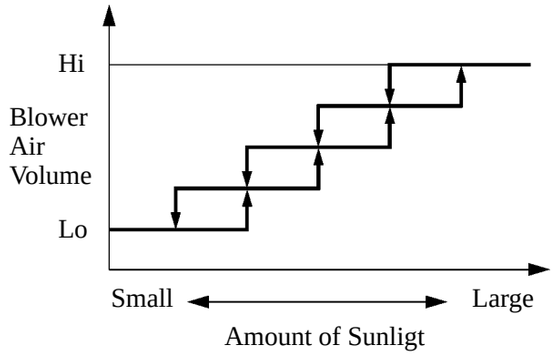

182BE51

2-Way Flow Mode Control

At the time of selecting FRESH mode, air conditioning ECU will judge it as 2-way flow mode when the blower outlet is selected to FOOT or FOOT/DEF, the tentative air mix damper opening angle is above the specified valve (MAX HOT), and either the blower volume is more than the specified volume or the vehicle speed is less than the specified speed.

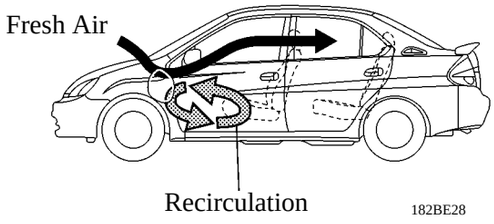

182BE28

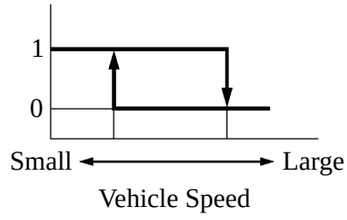

182BE29

Half Inlet Air Mode Control

At the time of selecting FRESH mode, air conditioning ECU will judge it as half inlet air mode when the blower outlet mode is selected to FACE or BI-LEVEL and TAO (Temperature Air Outlet) is more than the specified temperature, and operates both outlet air introduction and inlet air circulation at the same time.

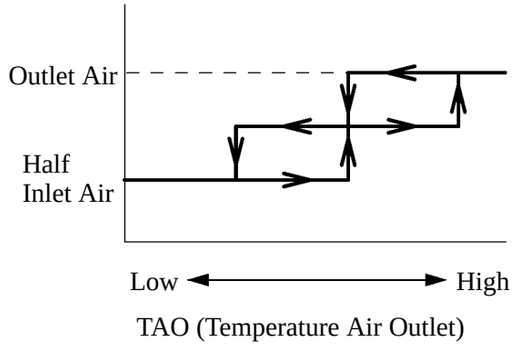

182BE52

Air Inlet Control System

1) Manual Control

Drives the air inlet servomotor according to the operation of the air inlet control switch and fixes the dampers in the FRESH or RECIRC position.
The 2-way flow mode control switches the recirculation/fresh-air function in accordance with the opening of the air mix damper, calculates the target opening of the damper, and rotates the servomotor.

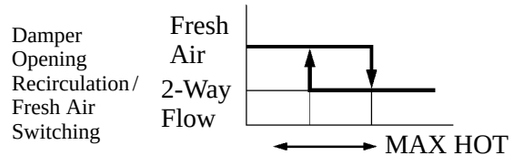

Tentative Damper Opening Angle (During 2-Way Flow Mode)

182BE31

2) Battery ECU Forced Fresh Air Mode

When the air conditioning ECU receives the forced fresh air mode signal from the battery ECU via the HV ECU and the ECM, the damper forcefully switches to the FRESH mode.

3) DEF, FOOT/DEF Mode Control

When the mode switching switch is switched to FOOT/DEF mode from DEF mode or other than FOOT/DEF mode, air conditioning ECU switches to FRESH mode forcibly.
Also, when the mode switching switch is switched to DEF mode from other than DEF mode, air conditioning ECU turns MAX mode ON and switched to FRESH mode forcibly.

Compressor Control System

1) OFF Control

Turns OFF the magnetic clutch of the compressor when the conditions for turning the blower motor OFF during warm-up control have been met.

2) Compressor Lock Judgment

When the magnetic clutch is ON, if the air conditioning ECU judges that the compressor has been locked, it turns OFF the magnetic clutch relay and flashes the indicator lamp in the A/C or MAX switch. The conditions in which the ECU judges the compressor to have locked are when a slippage rate of 80% or more has been continued for 3 seconds or more.

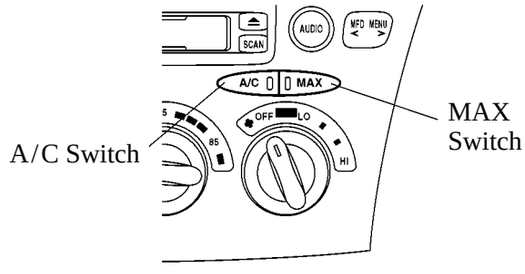

182BE33

3) Refrigerant Pressure Malfunction Detection

By monitoring the pressure switch signal, this system can judge the refrigerant pressure to be abnormal, and turns off the compressor magnetic clutch relay, if the pressure switch remains off.

4) MAX Switch ON Control

a. General

In case of usual air conditioning operation, the air conditioning system shows superior control on cooling performance and fuel efficiency by combining the engine ON/OFF control by the hybrid control and the air conditioning ON/OFF control.
In this MAX switch ON control, it controls by attaching greater importance to cooling performance of the air conditioning.

ACCESSORIES

■MULTI-INFORMATION DISPLAY

1. General

- A multi-information display has been provided on top of the center console as standard equipment. Consisting of a 5.8-inch wide LCD (Liquid Crystal Display) screen, this multi-information display provides a vehicle information screen, warning screen, and an audio operation screen. The outside temperature is also shown on the screen.
- A GPS (Global Positioning System) voice navigation is offered as an option. Through the use of the GPS and the map data in a DVD (Digital Versatile Disc), this navigation system analyzes the position of the vehicle and indicates that position on the map that is displayed on the screen. Additionally, it provides voice instructions to guide the driver through the route to reach the destination that has been selected.

Listed below are the main functions of the multi-information display.

Function	Outline
Map Screen Display*	● Enlargement/reduction, rotation and movement of map. ● Indication of current position and direction of travel. ● Correction of current position. ● Setting, change and indication of route. ● Voice guidance. ● Indication of enlarged intersections. ● Memory and indication of map position.
Audio Screen Display	Status of audio equipment and audio operation screen indication.
Information Screen Display	● Energy monitor screen indication. ● Fuel consumption screen indication.
Adjustment Screen Display	● Sound quality adjustment screen indication. ● Image quality adjustment screen indication. ● No indication.
On-screen Display	● Audio status indication. ● Warning indication.
Interrupt Screen Display	Warning indication.
Diagnosis Screen Display	● Display system diagnosis. ● Displays various type of coefficient settings.

*: with GPS Voice Navigation System

2. System Diagram

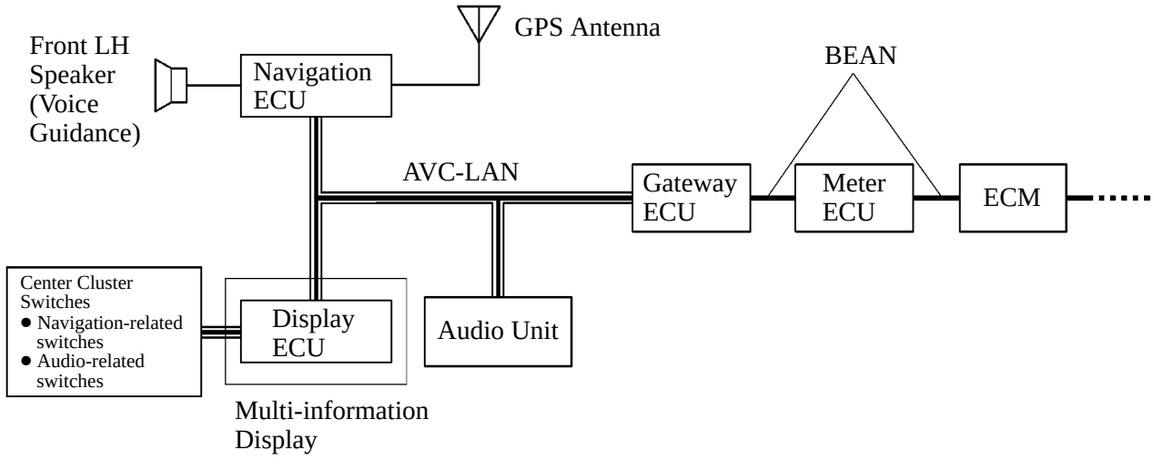

182BE34

3. Layout of Components

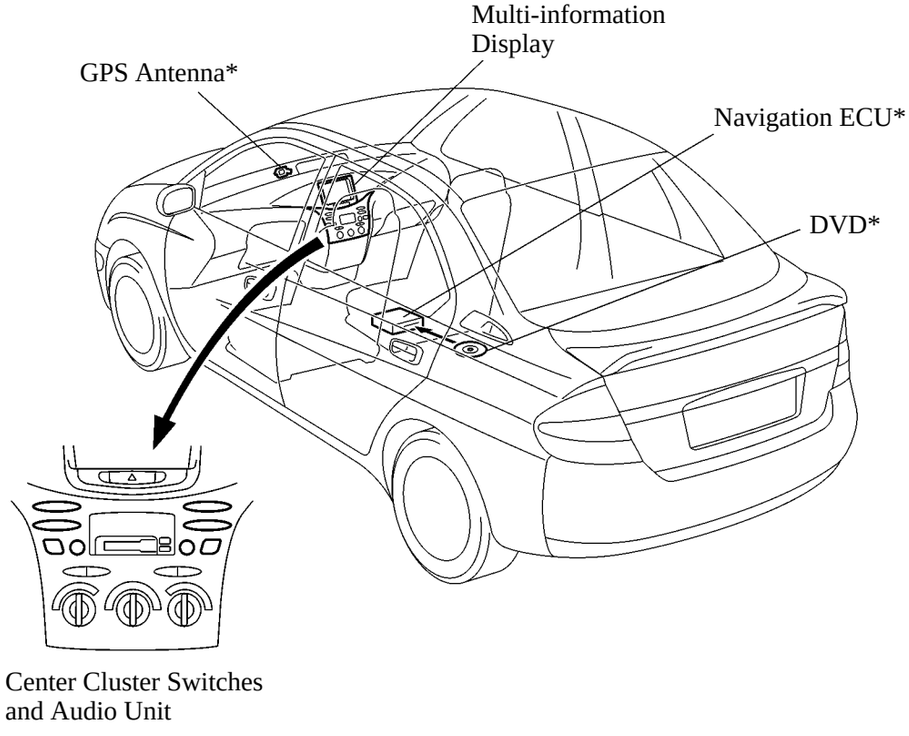

182BE35

*: with GPS Voice Navigation System

4. Construction and Operation

General

This system mainly consists of a multi-information display, navigation ECU, display ECU, gateway ECU, GPS antenna and audio unit.
The navigation ECU, display ECU, gateway ECU, and the audio unit all maintain communication through the AVC-LAN.

Navigation ECU

The navigation ECU is provided on the models with the GPS voice navigation. Based on the map data on the DVD, signals from the GPS satellites, signals from the built-in gyro sensor, and signals from the vehicle's speed sensor, this ECU calculates the vehicle's present position, direction of travel, and driven distance, and transmits the data to the display ECU. In addition, it outputs navigation voice instructions.

Display ECU

Upon receiving the vehicle information that is transmitted by the gateway ECU, the navigation information that is transmitted by the navigation ECU, and the operation information from the audio unit, the display ECU displays these data on the multi-information display.

Gateway ECU

The gateway ECU transmits the vehicle information to the display ECU in order for it to be displayed on multi-information display. Because vehicle information is transmitted by the ECUs that maintain communication on the BEAN (Body Electronics Area Network), the gateway ECU converts this information into signals for AVC-LAN use and sends it to the display ECU.

GPS Antenna

The GPS antenna is provided on the models with the GPS voice navigation.
The GPS antenna receives signals from the GPS satellites that are located on the orbits that circle the earth at an approximate altitude of 20,000 km. The GPS satellites continuously transmit orbit signals and the signal transmission time.

Multi-information Display

- The multi-information display has the functions for displaying the map screen, audio screen, information screen, adjustment screen, interrupt screen, and on-screen.
- This system's self-diagnosis function can be displayed and operated on the multi-information display. For details, refer to the 2001 Prius Repair Manual (Pub. No. RM778U).

1) Map Screen

The map screen is a function that is provided in the GPS voice navigation system.
Based on the map data on the DVD, signals from the GPS satellites, signals from the built-in gyro sensor, and signals from the vehicle's speed sensor, the vehicle's present position, direction of travel, and driven distance are calculated and displayed on this screen. This screen has the display functions listed below.

Item		Outline
Map Display	Heading Up/North Up	Changes the orientation of the map.
	Front Wide	Displays a map in the direction of travel of the vehicle in an enlarged form.
	Stepless Scale Display	Changes the scale of the map from the basic 11 steps to an even finer display.
	Direct Scale Change	Directly select and display the map scale.
	Multi-step Scale Display	Change and display the map scale in 11 stages.
	Scroll Display	Scrolls the screen to display the desired point on the map.
	Split-view Display	Displays different modes on a screen that is split into two views.
	Points-of-Interest Display	Displays selected types of marks on the map.
	Taillight-interlocked Map Color Change	Changes the displayed color on the map screen when the taillights are turned ON.
	Road Number Sign Board Display	Displays the road numbers on the map.
Destination Search	Hybrid Points-of-interest Search	Narrows the search by names of the points-of-interest, category, and areas.
	Points-of-interest Pinpoint Display	Pinpoints and displays the position of the point-of-interest.
	House Number Search	Searches for a house number.
	Special Memory Point	Sets a pre-registered point as a destination point while driving.
	Nearest Points-of-Interest Search List Display	Searches nearest points-of-interest and displays a list.
	Intersection Search	By specifying two streets, the point at which they intersect is set as the destination point.
	Emergency Search	Performs a specific search for hospitals, police stations, and dealers.
	Freeway Entrance/Exit Search	Searches for the destination by the name of the street that connects to a freeway entrance/exit.
Search	Route Search	Searches for multiple routes.
	Search Condition Designation	Searches for the recommended, shortest, and other routes.
	Regulated Road Consideration	Performs search while considering regulated roads.
	Avoidance Area	Avoids a designated area and searches a route.

(Continued)

Item		Outline
Guidance	Right or Left Turn Guidance	Voice guidance to instruct the direction of travel to be taken.
	Freeway Direction of Travel Guidance	Voice guidance to instruct the direction of travel to take on the freeway.
	Distance Display to Destination	Displays the distance from the present location to the destination.
	Freeway Branch Type Specimen Guidance	Type specimen for guidance to a freeway branch.
	Intersection Zoom-in Display	Zoom-in display when approaching an intersection.
	Turn List Display	Displays a turn list on the right side of the two-screen display when approaching an intersection.

2) Information Screen

The information screen provides two types of indications: the energy monitor screen indication that displays the present energy flow of the hybrid system, and the fuel consumption screen indication that displays the average fuel consumption rate, the amount of regenerative energy, and the instantaneous fuel consumption rate.

a. Energy Monitor Screen Indication

This screen indicates the energy transmission direction for checking the current drive method (engine, motor or both), the power generation status by the engine and status of regenerative energy use.

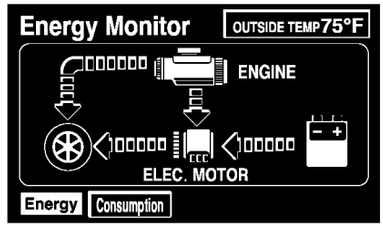

182BE36

b. Fuel Consumption Screen Indication

This screen indicates the average fuel consumption, recovered energy and the current fuel consumption, all at once.
The average fuel consumption is calculated using 5-minute units. The recovered energy over the past 5 minutes is indicated by symbols, with one mark representing 50 Wh.
In addition, the total fuel consumption before resetting and the total travel distance are displayed at the right bottom of the screen.

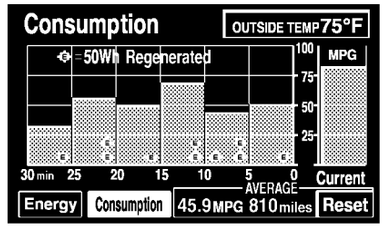

182BE37

3) Interrupt Screen

a. General

If an abnormal condition occurs in the vehicle system, even if another screen is being displayed, the interrupt screen automatically indicates a warning to inform the driver of an abnormality in the system. The warning indication screen flashes for 5 seconds the mark of the system in which the abnormality occurred. Then, it illuminates and remains displayed until the screen is switched or the system is reinstated to normal.

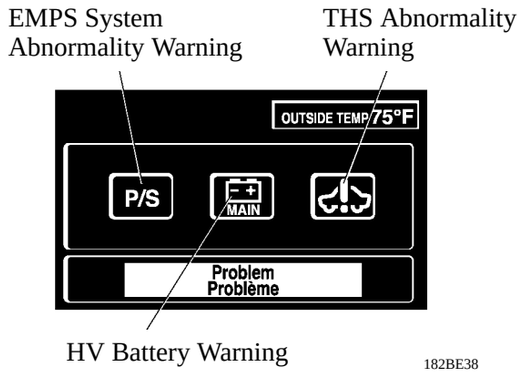

182BE38

▶ List of Warning Display Items ◀

Warning Display Item	Description of Warning
EMPS System Abnormality Warning	When an abnormality occurs in the EMPS (Electric Motor-assisted Power Steering) system.
HV Battery Warning*	When the HV battery voltage drops.
THS Abnormality Warning	When an abnormality occurs in the THS (TOYOTA Hybrid System).

*: While “READY” light is lighting.

b. HV Battery Warning

When starting THS (when turning the IG key to START position) and if HV battery is displayed in this interrupt screen, it means that HV battery has abnormality.

4) On-screen

If the screen switches to another screen while displaying a warning indication, the mark of the system in which the abnormality occurred is displayed at the top right area of the screen. The displayed mark disappears when the system is reinstated to normal.

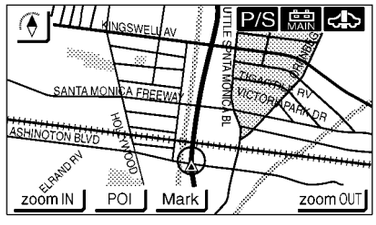

182BE39

5. GPS (Global Positioning System) Voice Navigation

General

- The GPS (Global Positioning System) function receives, via an GPS antenna, the signals that are transmitted from the GPS satellites located in space at an approximate altitude of 20,000 km, in order to determine the vehicle's present position.
- The GPS voice navigation function combines the radiowave navigation system that determines the present position through the GPS signals, and the self-contained navigation system that detects the driven distance and the direction of travel through the speed sensors and the gyro sensor that is contained in the navigation ECU. The GPS voice navigation function is a high-precision navigation system that indicates the vehicle position on the map display on the DVD and guides the route from the present position to the destination on a map and pictogram and through voice instructions.
  The multi-information display shows the data that has been calculated by the radiowave navigation system and the self-contained navigation system.

Construction and Operation

The GPS voice navigation function consists of the following components:

- GPS Antenna
- Speed Sensor
- GPS Receiver (contained in the navigation ECU)
- Gyro Sensor (contained in the navigation ECU)
- Navigation ECU
- Speaker

For details on the basic operation of the GPS antenna and the navigation ECU, see page 175.

1) Speed Sensor

The navigation ECU will receive the vehicle speed signal directly from the meter ECU.

2) GPS Receiver

The GPS receiver demodulates the signals that are received by the GPS antenna from the satellites and outputs them to the navigation ECU.

3) Gyro Sensor

The gyro sensor is designed to detect the yaw rate of vertical axis turn of the vehicle and installed in the Navigation ECU.
The gyro sensor has a turning-fork shape type piezoelectric ceramic piece inside. This piezoelectric ceramic piece deforms by charging voltage and generates voltage by deforming with force.
The piezoelectric ceramic piece inside the gyro sensor is vibrated by the driving circuit and when the vehicle turns (when the detection portion turns to the axis direction), coriolis force is added to the detection portion. With this force, the detection portion is twisted. The voltage generated by this twisting is signal-processed inside the gyro sensor and outputted.
Navigation ECU receives this signal and judges the yaw rate of the vehicle.

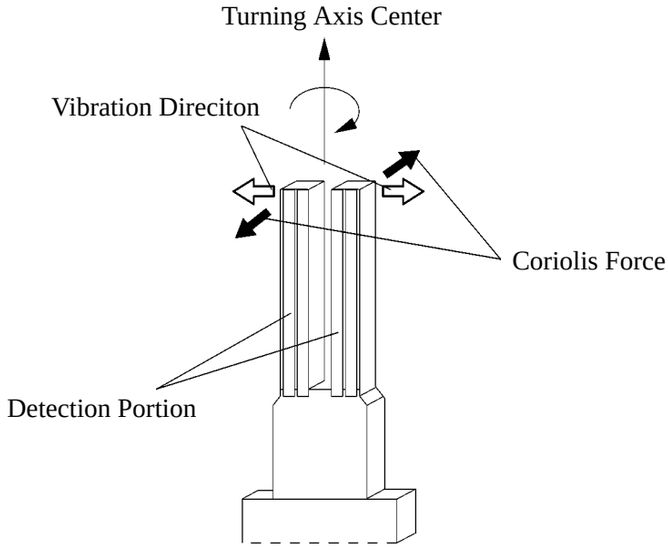

182BE49

4) Speaker

Outputs the sound signals that are transmitted from the power amplifier. Also outputs the navigation voice instructions via the front left speaker.

5) Detecting the Vehicle Position

The navigation ECU calculates the position based on the principle of a 3-point measurement.
The GPS satellites are equipped with high-precision clocks. Thus, the satellites are able to transmit continuous orbit signals and radiowave transmission time signals.
The navigation ECU also contains a clock, which can understand the radiowave time signals that are received from the satellites.
As a result, the length of time that is taken by the radiowaves to arrive from the satellites to the antenna can be determined. Thus, the lengths of time that elapse for the radiowaves of the 4 satellites to reach the antenna are measured. Each of these lengths of time are multiplied by the luminous flux (the rate of transmission of luminous energy: approximately 300,000 km per second), the results of which are the distances from the satellites to the antenna. Because the positions of the GPS satellites are known by their signals, the receiving point (vehicle position) can be rendered as the point in which the 4 spheres (of which the centers are the respective satellites) converge.
However, due to the differences that exist between the clocks of the satellite and the ECU, the 4 spheres do not converge at a single point. Therefore, the ECU uses another satellite to calculate the point at which the 4 spheres converge at a single point and corrects its internal clock. As a result, the ECU determines the vehicle position and adjusts its internal clock to the clocks of the satellites.

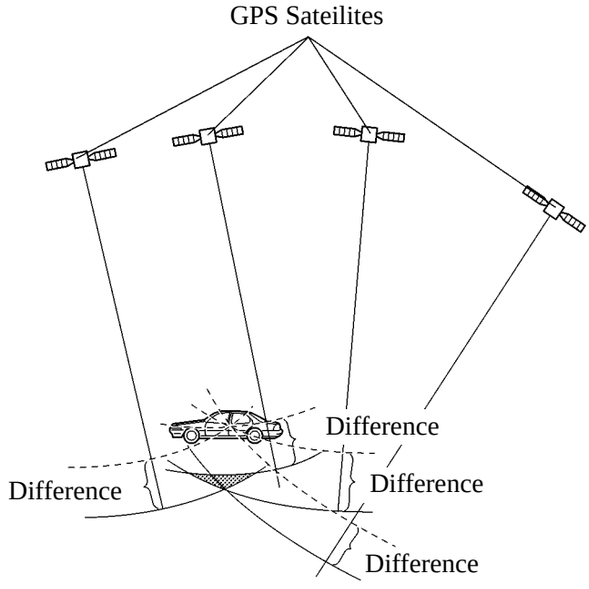

151LBE24

■POWER WINDOW SYSTEM

The power window system has the following features:

- This system includes one-touch auto-up and down and key-off operation function. The one-touch auto up and down function automatically fully closes and opens the driver's side window. The key-off operation function makes it possible to operate the power windows for approximately 45 seconds after the ignition key is turned to the ACC or LOCK position, if the front doors are not opened.
  Also, a jam protection function has been adopted to the closing operation of the driver's window. If a foreign object becomes jammed in the window during one-touch auto-up or key-off operation of the driver's window, this function automatically stops the power window and moves it downward.
- This system controls the driver's door through the power window master switch, and the front passenger and rear passenger doors through the body ECU. The power window master switch and the body ECU maintain communication through the UART (Universal Asynchronous Receiver Transmitter).

▶ System Diagram ◀

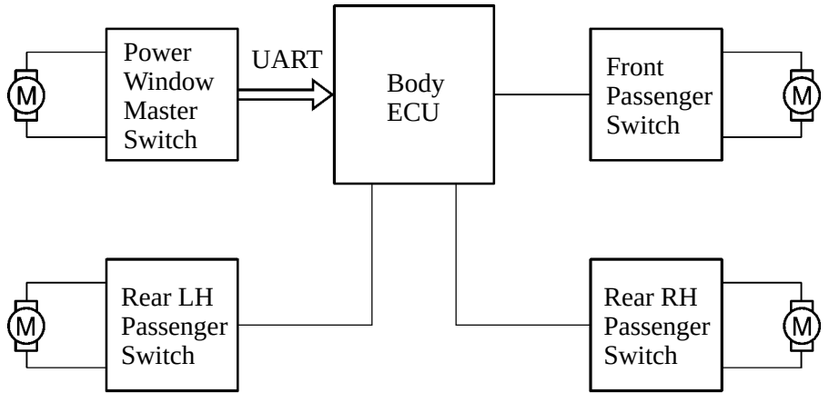

182BE40

■DOOR LOCK CONTROL SYSTEM

The door lock control system has the following features:

- This system has a “key-linked lock and unlock”, “key-confine prevention” and “manual unlock prohibition” functions.
- A 2-step unlock function is provided to unlock the driver’s door by turning the key cylinder first and to unlock passenger’s door by turning it the second time.
- The control of this system is effected by the body ECU. The door lock control signal from the driver’s door is transmitted from the power window master switch to the body ECU through the UART (Universal Asynchronous Receiver Transmitter).
- If you unlock using the ignition key from the conditions in which all the doors are locked, the dome light will be lighted.

▶ System Diagram ◀

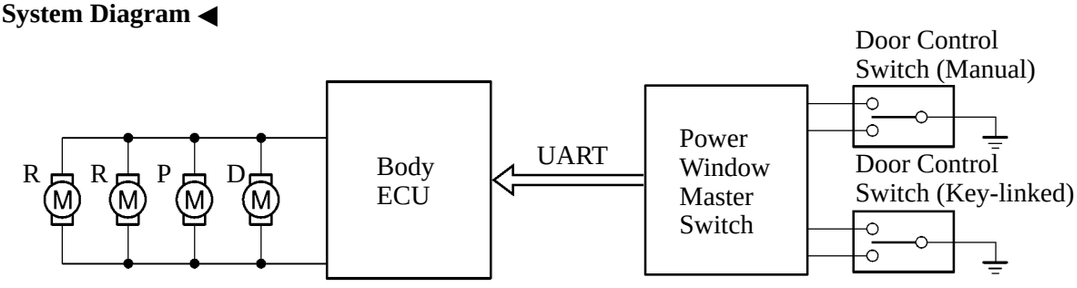

182BE41

■WIRELESS DOOR LOCK REMOTE CONTROL SYSTEM

The wireless door lock remote control system has the following features:

- In this system, the wireless door control receiver performs the code identification process and the body ECU effects the door lock control. Serial data link is provided for communication between the wireless door control receiver and the body ECU.
- A key-holder type transmitter has been adopted, and it contains the following three switches: the door lock switch, door unlock switch, and panic switch.
- A rolling code system, in which the signal configuration changes each time when a signal is transmitted by the transmitter, has been adopted.
- Panic alarm operation has been adopted.
- The verification light function has been adopted. When the transmitter is used to lock or unlock the doors, this function flashes the taillights to inform that the operation has been completed. However, at the time of unlocking, the dome light will be lighted.

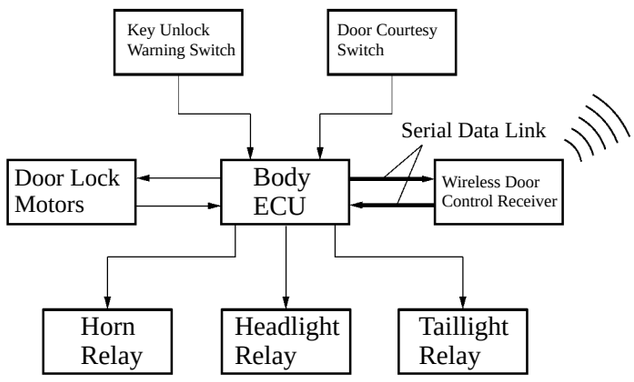

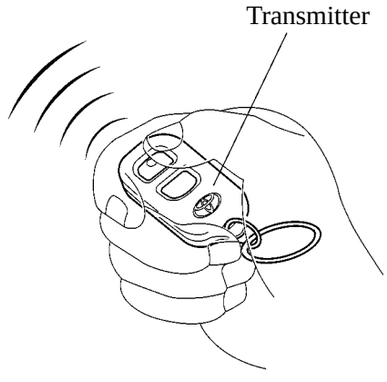

169BE10

■HV IMMOBILISER SYSTEM

The HV immobiliser system has a theft-deterrent system to disable the THS (TOYOTA Hybrid System) from starting using the ignition key without the ID code pre-registered.
This system adopts a transponder system which uses a transponder chip embedded in the grip of the ignition key. When the coil located around the ignition key cylinder receives the ID code signal transmitted by the transponder chip, the ECU determines whether or not the ID code matches the code registered.

▶ System Diagram ◀

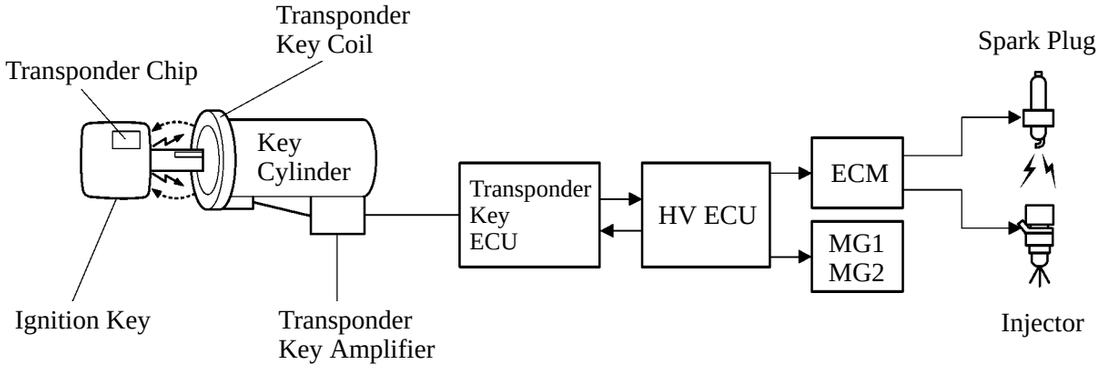

182BE42

■ THEFT DETERRENT SYSTEM

1. General

- The theft deterrent system uses the door lock control system components and some other parts. When somebody attempts to forcibly enter the vehicle or open the engine hood or luggage compartment door without a key, or when the battery terminals are removed and reconnected, the theft deterrent system sounds the vehicle's horn, security horn and flashes the headlights, taillights, hazard lights and interior light for about one minute to alert. At the same time, it locks all the doors.
- The control of this system is effected by the body ECU.

▶ Wiring Diagram ◀

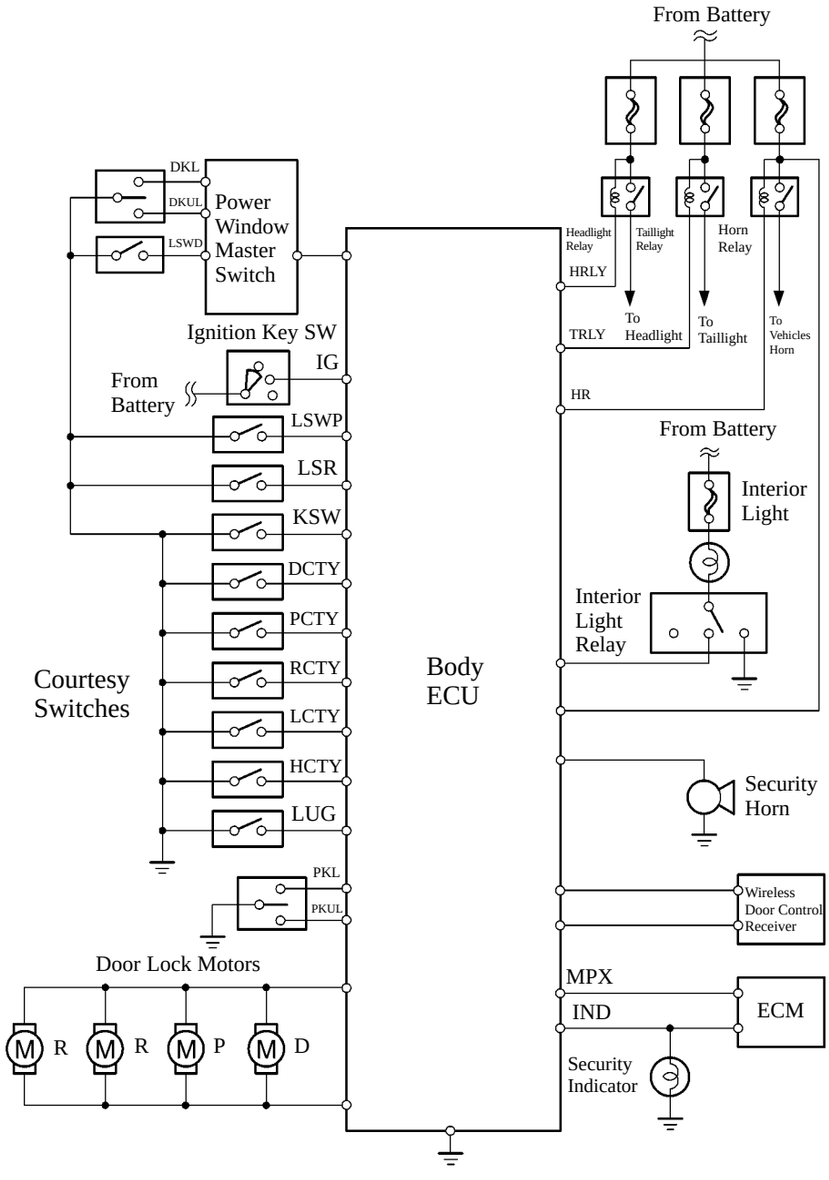

182BE43

▶ List of Input/Output Signals ◀

Terminal Name	Outline	Terminal Name	Outline
DKL	Driver's door key lock signal	LCTY	Rear left door courtesy switch status signal
DKUL	Driver's door key unlock signal	HCTY	Hood courtesy switch status signal
LSWD	Driver's door lock position switch signal	LUG	Luggage compartment door courtesy switch status signal
IG	Ignition key switch status signal	PKL	Front passenger door key lock signal
LSWP	Front passenger door lock position switch signal	PKUL	Front passenger door key unlock signal
LSR	Rear left door lock position switch signal	HRLY	Output signal to headlight relay
KSW	Ignition key cylinder's key presence/absence signal	TRLY	Output signal to taillight relay
DCTY	Driver's door courtesy switch status signal	HR	Output signal to vehicle horn relay
PCTY	Front passenger door courtesy switch status signal	MPX	Multiplex Communication (BEAN)
RCTY	Rear right door courtesy switch status signal	IND	Output signal to security indicator

2. Operation

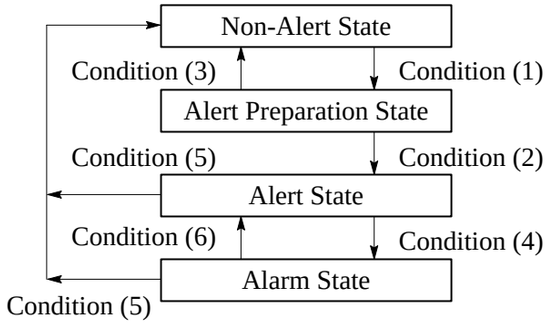

Non-Alert State: When the security function is inactive

Without having the ignition key in the ignition key cylinder, if any one of the conditions listed below exists, the system transfers to the alert preparation state.

Condition (1)

- When the doors, engine hood, and luggage compartment door are all closed, the ignition key is used to lock all doors.
- When the doors, engine hood, and luggage compartment door are all closed, the wireless door lock remote control system is used to lock all doors.
- When all doors are locked, if any door, engine hood, or luggage compartment door is changed from "close" to "open", and "close" again, all doors, engine hood, and luggage compartment door will be locked.

Alert Preparation State: a delay time until the alert state

The system transfers to the alert state if the condition (2) listed below is met, and to the non-alert state if one of the conditions (3) is met.

Condition (2)

- When the doors, engine hood, and luggage compartment door are all closed and locked, and 30 seconds have elapsed.

Condition (3)

- When one of the doors, engine hood, or luggage compartment door is changed from “close” to “open”.
- When one of the doors, engine hood, or luggage compartment door is changed from “lock” to “unlock”.
- When the ignition key is inserted in the ignition key cylinder.
- When a terminal is disconnected from the battery and re-connected.

Alert State: a state in which attempted theft can be detected

The system transfers to the alarm state if any one of the conditions (4) listed below is met, or to the non-alert state if any one of the conditions (5) is met.

Condition (4)

- Any door, engine hood, or luggage compartment door is opened.
- The ignition key or the wireless door lock remote control system other than the transmitter is used for unlocking.
- The luggage compartment door is opened with something other than the ignition key.
- The engine hood is opened.
- A terminal is disconnected from the battery and re-connected.
- The wiring harness is directly connected as if to turn the ignition switch ON.

Condition (5)

- The ignition key is used to unlock the doors or the luggage compartment door.
- The transmitter of the wireless door lock remote control system is used to unlock the doors.
- The ignition key is inserted in the ignition key cylinder and turned until the ignition switch is ON.

Alarm State: a state in which attempted theft can be detected

- When an attempted theft is detected, the system sounds the vehicle’s horn and the security horn, flashes the headlights, taillights, and hazard lights, and illuminates the interior light to alert the people in the area. If any one of the doors is unlocked, and the ignition key is not inserted in the ignition key cylinder, the system forcefully locks the doors once.
- The system transfers to the alert state if the condition (6) described below is met, or, when the system is in the alarm state, it transfers to the non-alert state if any one of the conditions (5) described above is met. At this time, the taillights are illuminated for 2 seconds to inform the driver that an attempted theft has been detected.

Condition (6)

- After approximately 60 seconds of the alarm time have elapsed.

■SRS AIRBAG AND SRS SIDE AIRBAG

- The SRS (Supplemental Restraint System) airbags are provided for the driver and front passenger. The SRS airbags have been designed to help reducing the shocks to the heads and chests of the driver and front passenger in the event of a frontal impact collision as supplements to the seat belts.
  This system is a 3-sensor type airbag system to detect the impact during a front collision using the airbag sensor assemblies and front airbag sensor, and to make the airbag system and seat belt pretensioner operate as well.
  Also, the function of the ECU to memorize the seat belt wearing condition while inflating the airbag is added.
- The SRS side airbags are provided for the driver and front passenger as an option. The SRS side airbags have been designed to help reducing the impact energy that is transmitted to the driver and front passenger in the event of a side collision.
  The driver side and the front passenger side are each provided with one sensor.
- A fuel cut control has been adopted to stop the fuel pump when the SRS airbag is deployed, thus helping reduce fuel leakage.

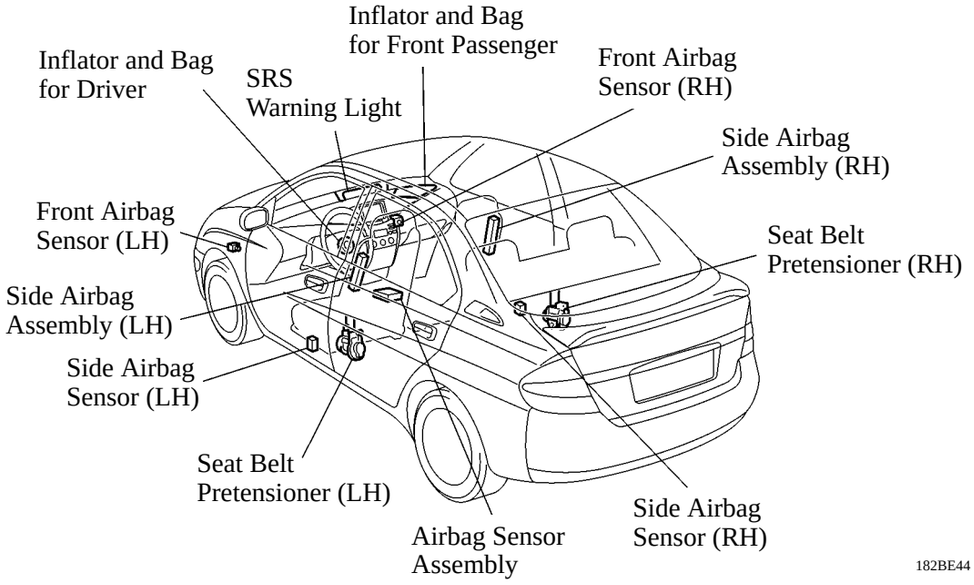

▶ System Diagram ◀

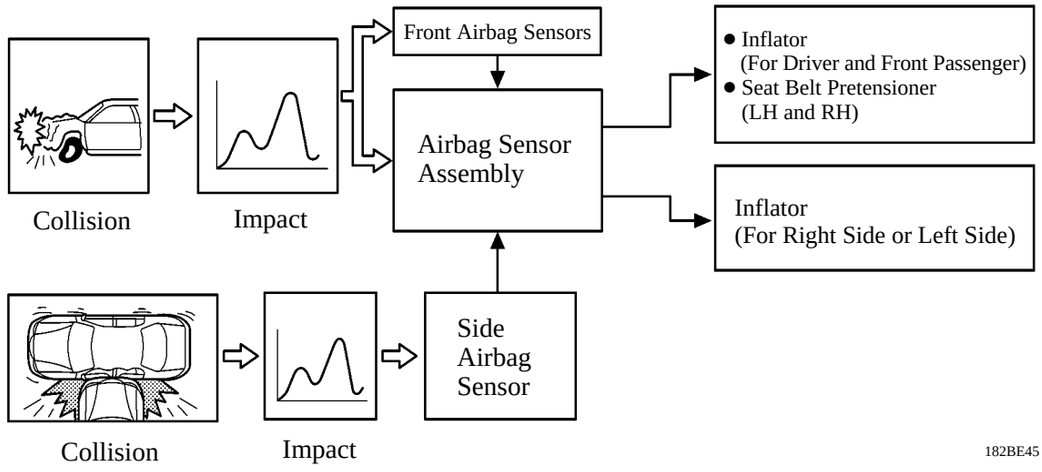

■CRUISE CONTROL SYSTEM

1. General

The Prius has adopted a cruise control system that uses the hybrid system, and it is offered as an option. This system, which is controlled by the HV ECU that is integrated with the cruise control ECU, operates the vehicle through an optimal combination of the drive forces of the electric motor and the engine in accordance with the setting on the cruise control switch.

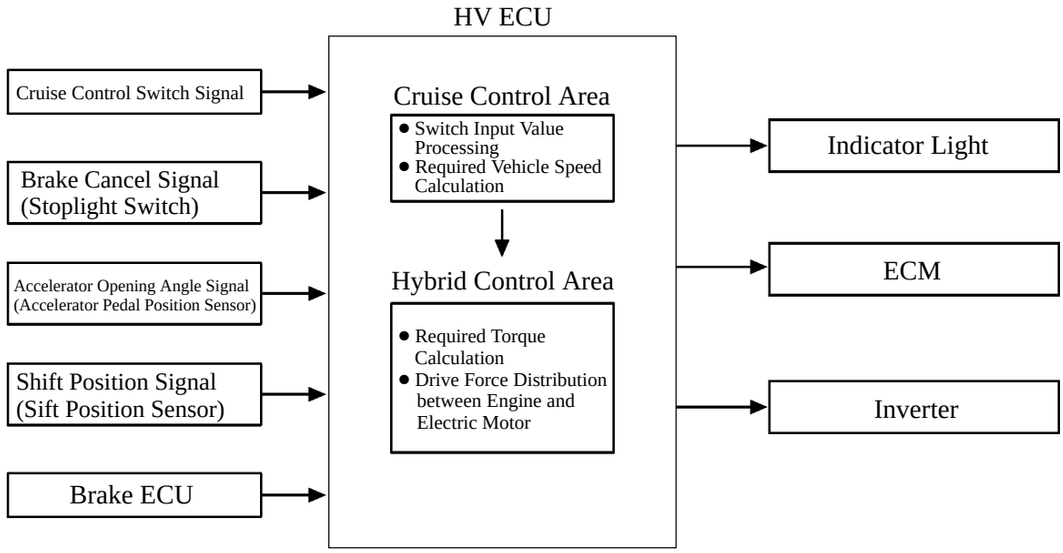

182BE46

2. Construction

The cruise control system mainly consists of an HV ECU, cruise control switches, indicator, stoplight switch, accelerator pedal position sensor, and the shift position sensor.
The table below shows each of the functions.

Item	Function
HV ECU	Controls all the functions of the cruise control system in accordance with the signals from the sensors.
Cruise Control Main Switch	Cruise control system's ON/OFF signal requirement.
Cruise Control Switch	A three-directional switch that provides the SET/COAST, RESUME/ACCEL, and CANCEL functions. It requires the functions and settings in accordance with its operations.
Indicator Light	It is provided in the combination meter to display whether the system is ON or OFF.
Stop Light Switch	Detects that the driver has stepped on the brake pedal.
Accelerator Pedal Position Sensor	Detects the accelerator pedal opening angle.
Shift Position Sensor	Detects the shift position.

■ SEAT BELT WARNING SYSTEM

1. General

A seat belt warning system has been adopted. If the driver's seat belt is not buckled, the warning light flashes and the buzzer sounds. If the front passenger seat belt is not buckled, it flashes the warning light. When the ignition switch is turned ON, this system determines whether or not the seat belt is buckled by the ON or OFF condition of the switch that is provided in the seat belt buckle. The occupant detection sensor provided in the seat cushion of the front passenger seat determines whether or not an occupant is seated in the front passenger seat.

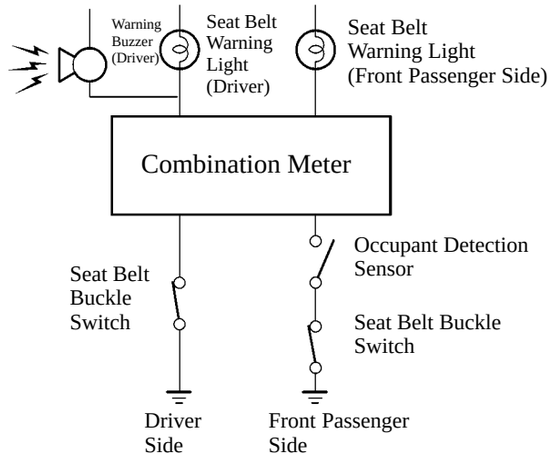

182BE47

2. Occupant Detection Sensor

The occupant detection sensor, which is enclosed in the seat cushion of the front passenger seat, is used to detect whether or not the front passenger seat is occupied.
This sensor, which is shaped as illustrated below, consists of a construction in which two sheets of electrodes sandwich a spacer. When the occupant is seated, the electrode sheets come in contact with each other through the hole that is provided in the spacer portion, thus enabling the current to flow.
Thus, the sensor detects whether or not an occupant is seated in the front passenger seat.

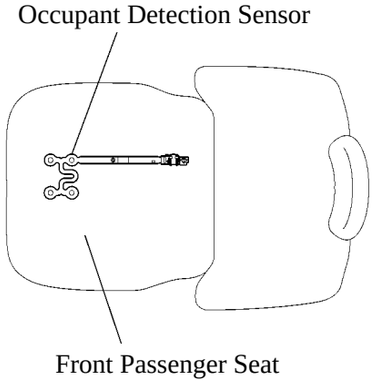

Upside View

182BE53

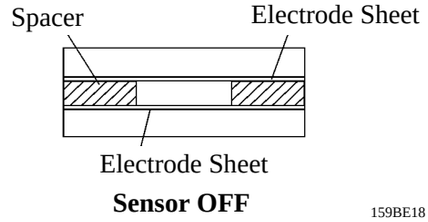

Sensor OFF

159BE18

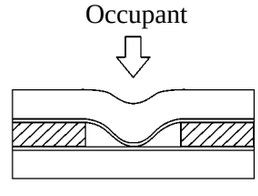

Sensor ON

159BE19

MAJOR TECHNICAL SPECIFICATIONS

Item \ Area			U.S.A. and Canada	
Body Type			4-Door Sedan	
Vehicle Grade			—	
Model Code			NHW11L-AEEEBA	NHW11L-AEEEBK
Major Dimensions & Vehicle Weights	Overall	Length mm (in.)	4305 (169.5)	←
		Width mm (in.)	1695 (66.7)	←
		Height mm (in.)	1465 (57.6)	←
	Wheel Base	mm (in.)	2550 (100.4)	←
	Tread	Front mm (in.)	1475 (58.1)	←
		Rear mm (in.)	1480 (58.3)	←
	Effective Head Room	Front mm (in.)	985 (38.8)	←
		Rear mm (in.)	942 (37.1)	←
	Effective Leg Room	Front mm (in.)	1047 (41.2)	←
		Rear mm (in.)	899 (35.4)	←
	Shoulder Room	Front mm (in.)	1342 (52.8)	←
		Rear mm (in.)	1325 (52.2)	←
	Overhang	Front mm (in.)	815 (32.1)	←
		Rear mm (in.)	940 (37.0)	←
	Min. Running Ground Clearance	mm (in.)	125 (4.9)	←
	Angle of Approach	degrees	14°	←
	Angle of Departure	degrees	22°	←
	Curb Weight	Front kg (lb)	770 (1700)	←
		Rear kg (lb)	485 (1065)	←
		Total kg (lb)	1255 (1765)	←
	Gross Vehicle Weight	Front kg (lb)	890 (1965)	←
		Rear kg (lb)	750 (1650)	←
		Total kg (lb)	1640 (3615)	←
	Fuel Tank Capacity	ℓ (US. gal., lmp.gal.)	45* (11.9, 9.9)	←
	Luggage Compartment Capacity	m^3 (cu.ft.)	0.39 (137.7)	←
Performance	Max. Speed	km/h (mph)	160 (99.4)	←
	Max. Cruising Speed	km/h (mph)	160 (99.4)	←
	Acceleration	0 to 100 km/h sec.	12.7	←
		0 to 400 m sec.	19.0	←
	Max. Permissible Speed	1st Gear km/h (mph)	—	—
		2nd Gear km/h (mph)	—	—
		3rd Gear km/h (mph)	—	—
		4th Gear km/h (mph)	—	—
	Min. Turning Radius (Outside Front)	Wall to Wall m (ft.)	10.2 (33.5)	←
		Curb to Curb m (ft.)	9.4 (30.8)	←
Engine	Engine Type		1NZ-FXE	←
	Valve Mechanism		16-Valve, DOHC	←
	Bore × Stroke	mm (in.)	75.0 × 84.7 (2.95 × 3.33)	←
	Displacement	cm^3 (cu.in.)	1497 (91.4)	←
	Compression Ratio		13.0	←
	Carburetor Type		SFI	←
	Research Octane No.	RON	95	←
	Max. Output (EEC)	kW/rpm (HP@rpm)	52/4500 (70@4500)	←
	Max. Torque (EEC)	N·m/rpm (lb-ft@rpm)	111/4200 (82@4200)	←
Engine Electrical	Battery Capacity (5HR)	Voltage & Amp. Hr.	12 – 28	←
	Alternator Output	Watts	—	—
	Starter Output	kW	—	—
Chassis	Clutch Type		—	—
	Transaxle Type		P111	←
	Transmission Gear Ratio	In First	—	—
		In Second	—	—
		In Third	—	—
		In Fourth	—	—
		In Fifth	—	—
		In Reverse	—	—
	Counter Gear Ratio		—	—
	Differential Gear Ratio (Final)		3.905	←
	Brake Type	Front	Ventilated Disc	←
		Rear	L.T. Drum	←
	Parking Brake Type		L.T. Drum	←
	Brake Booster Type and Size	in.	Hydraulic	←
	Proportioning Valve Type		P-Valve	←
	Suspension Type	Front	MacPherson Strut	←
		Rear	Torsion Bean	←
	Stabilizer Bar	Front	STD	←
		Rear	STD	←
	Steering Gear Type		Rack and Pinion	←
	Steering Gear Ratio (Overall)		16.4~18.3	←
	Power Steering Type		Electric Motor	←

*: EPA / CARB ORVR Test conditions

HOW TO USE THIS MANUAL

IN00U–36

GENERAL INFORMATION

1. INDEX

An INDEX is provided on the first page of each section to guide you to the item to be repaired. To assist you in finding your way through the manual, the section title and major heading are given at the top of every page.

2. PRECAUTION

At the beginning of each section, a PRECAUTION is given that pertains to all repair operations contained in that section.

Read these precautions before starting any repair task.

3. TROUBLESHOOTING

TROUBLESHOOTING tables are included for each system to help you diagnose the problem and find the cause. The fundamentals of how to proceed with troubleshooting are described on page IN–30.

Be sure to read this before performing troubleshooting.

4. PREPARATION

Preparation lists the SST (Special Service Tools), recommended tools, equipment, lubricant and SSM (Special Service Materials) which should be prepared before beginning the operation and explains the purpose of each one.

5. REPAIR PROCEDURES

Most repair operations begin with an overview illustration. It identifies the components and shows how the parts fit together.

Example:

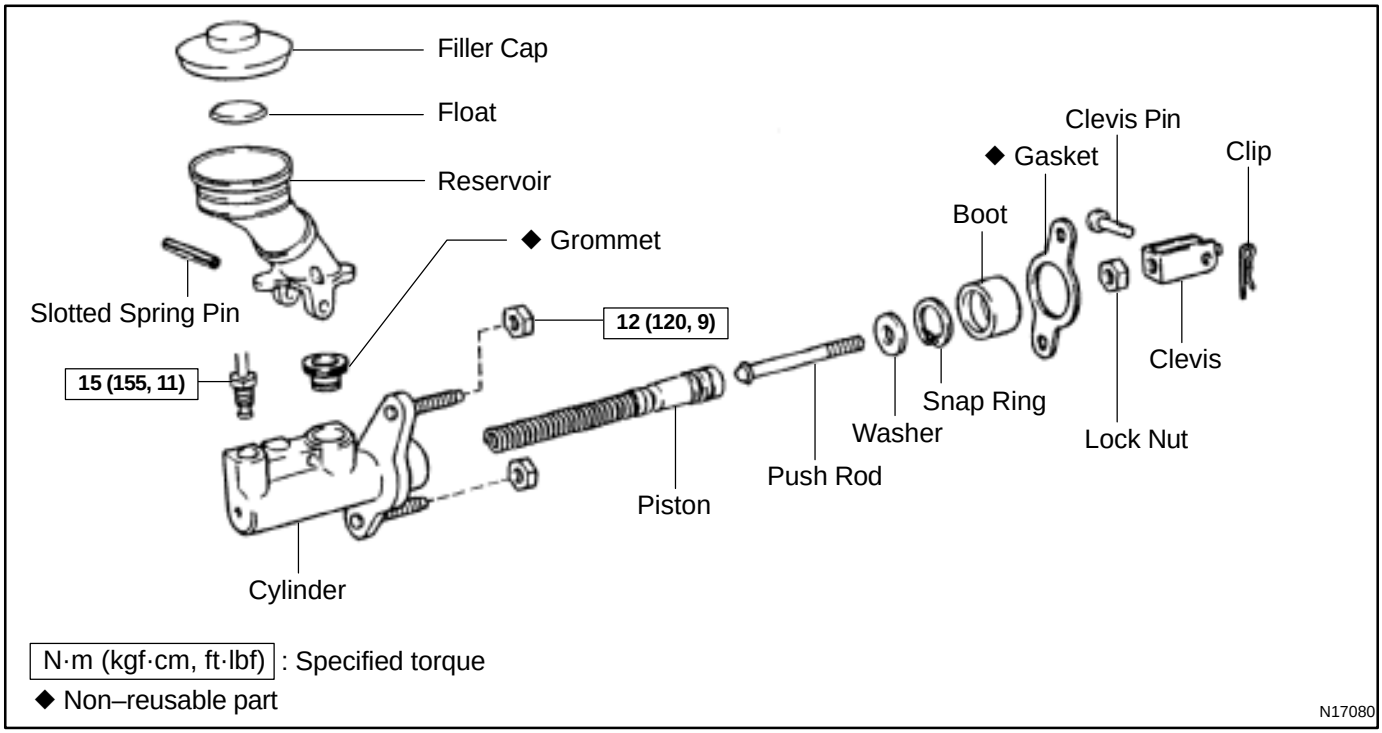

The procedures are presented in a step–by–step format:

- The illustration shows what to do and where to do it.
- The task heading tells what to do.
- The detailed text tells how to perform the task and gives other information such as specifications and warnings.

Example:

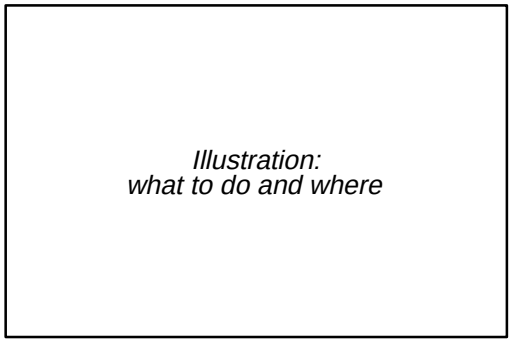

Task heading : what to do

21. CHECK PISTON STROKE OF OVERDRIVE BRAKE

(a) Place SST and a dial indicator onto the overdrive brake piston as shown in the illustration.

SST 09350–30020 (09350–06120)

Set part No. *Component part No.*

Detailed text : how to do task

(b) Measure the stroke applying and releasing the compressed air (392 — 785 kPa, 4 — 8 kgf/cm^2 or 57 — 114 psi) as shown in the illustration.

Piston stroke: 1.40 — 1.70 mm (0.0551 — 0.0669 in.)

Specification

This format provides the experienced technician with a FAST TRACK to the information needed. The upper case task heading can be read at a glance when necessary, and the text below it provides detailed information. Important specifications and warnings always stand out in bold type.

6. REFERENCES

References have been kept to a minimum. However, when they are required you are given the page to refer to.

7. SPECIFICATIONS

Specifications are presented in bold type throughout the text where needed. You never have to leave the procedure to look up your specifications. They are also found in Service Specifications section for quick reference.

8. CAUTIONS, NOTICES, HINTS:

- CAUTIONS are presented in bold type, and indicate there is a possibility of injury to you or other people.
- NOTICES are also presented in bold type, and indicate the possibility of damage to the components being repaired.
- HINTS are separated from the text but do not appear in bold. They provide additional information to help you perform the repair efficiently.

9. SI UNIT

The UNITS given in this manual are primarily expressed according to the SI UNIT (International System of Unit), and alternately expressed in the metric system and in the English System.

Example:

Torque: 30 N·m (310 kgf·cm, 22 ft·lbf)

IDENTIFICATION INFORMATION

IN0HK–02

VEHICLE IDENTIFICATION AND ENGINE AND MOTOR SERIAL NUMBER

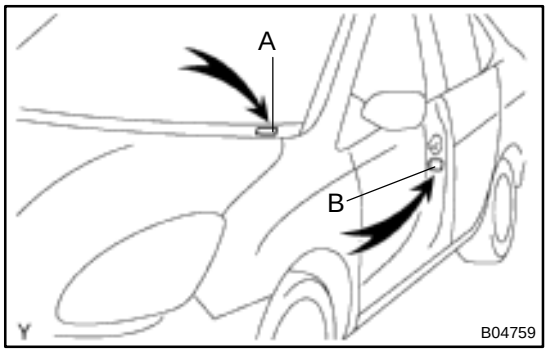

1. VEHICLE IDENTIFICATION NUMBER

The vehicle identification number is stamped on the vehicle identification number plate and the certification label, as shown in the illustration.

A: Vehicle Identification Number Plate
B: Certification Label

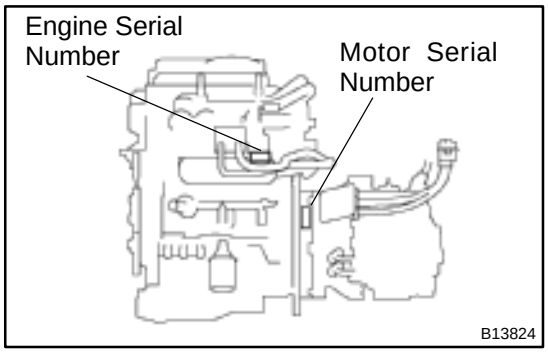

2. ENGINE AND MOTOR SERIAL NUMBER

(a) The engine serial number is stamped on the engine block, as shown in the illustration.

(b) The motor serial numbers is stamped, as shown in the illustration.

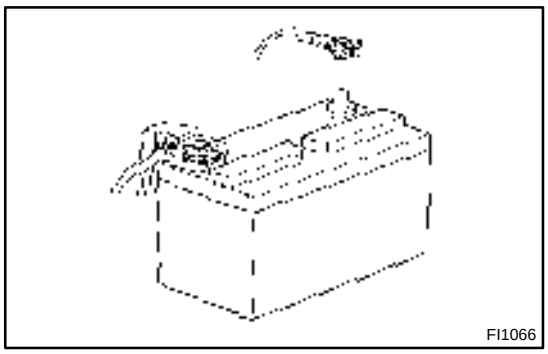
FI1066

REPAIR INSTRUCTIONS

GENERAL INFORMATION

IN0CO–17

BASIC REPAIR HINT

(a) Use fender, seat and floor covers to keep the vehicle clean and prevent damage.

(b) During disassembly, keep parts in the appropriate order to facilitate reassembly.

(c) Installation and removal of battery terminal:

(1) Before performing electrical work, disconnect the negative (–) terminal cable from the battery.

(2) If it is necessary to disconnect the battery for inspection or repair, first disconnect the negative (–) terminal cable.

(3) When disconnecting the terminal cable, to prevent damage to battery terminal, loosen the cable nut and raise the cable straight up without twisting or prying it.

(4) Clean the battery terminals and cable ends with a clean shop rag. Do not scrape them with a file or other abrasive objects.

(5) Install the cable ends to the battery terminals after loosening the nut, and tighten the nut after installation. Do not use a hammer to tap the cable ends onto the terminals.

(6) Be sure the cover for the positive (+) terminal is properly in place.

(d) Check hose and wiring connectors to make sure that they are connected securely and correctly.

(e) Non–reusable parts

(1) Always replace cotter pins, gaskets, O–rings, oil seals, etc. with new ones.

(2) Non–reusable parts are indicated in the component illustrations by the "◆" symbol.

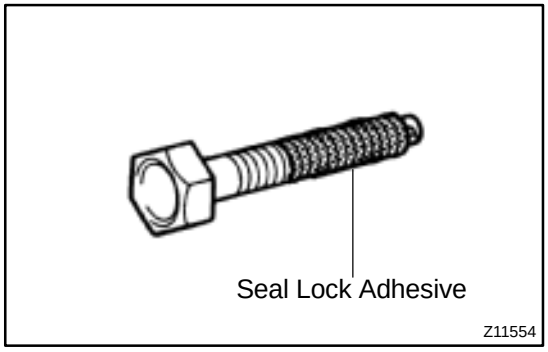

Z11554

(f) Precoated parts

Precoated parts are bolts, nuts, etc. that are coated with a seal lock adhesive at the factory.

(1) If a precoated part is retightened, loosened or caused to move in any way, it must be recoated with the specified adhesive.

(2) When reusing precoated parts, clean off the old adhesive and dry with compressed air. Then apply the specified seal lock adhesive to the bolt, nut or threads.

(3) Precoated parts are indicated in the component illustrations by the "★" symbol.

(g) When necessary, use a sealer on gaskets to prevent leaks.

(h) Carefully observe all specifications for bolt tightening torques. Always use a torque wrench.

(i) Use of special service tools (SST) and special service materials (SSM) may be required, depending on the nature of the repair. Be sure to use SST and SSM where specified and follow the proper work procedure. A list of SST and SSM can be found in Preparation section in this manual.

Medium Current Fuse and High Current Fuse Equal Amperage Rating

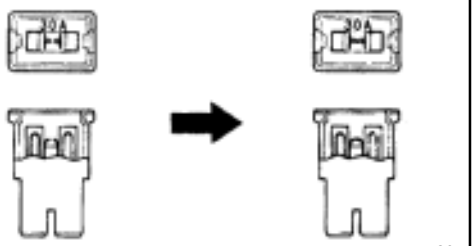

BE1367

(j) When replacing fuses, be sure the new fuse has the correct amperage rating. DO NOT exceed the rating or use one with a lower rating.

Illustration	Symbol	Part Name	Abbreviation
 BE5594	 IN0365	FUSE	FUSE
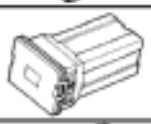 BE5595	 IN0366	MEDIUM CURRENT FUSE	M–FUSE
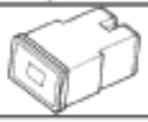 BE5596	 IN0367	HIGH CURRENT FUSE	H–FUSE
 BE5597	 IN0367	FUSIBLE LINK	FL
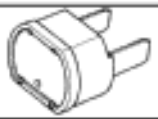 BE5598	 IN0368	CIRCUIT BREAKER	CB

V00076

(k) Care must be taken when jacking up and supporting the vehicle. Be sure to lift and support the vehicle at the proper locations (See page IN–8).
- Cancel the parking brake on the pedal place and shift the transmission in N position.
- When jacking up the front wheels of the vehicle at first place stoppers behind the rear wheels.
- When jacking up the rear wheels of the vehicle at first place stoppers before the front wheels.
- When either the front or rear wheels only should be jacked up, set rigid racks and place stoppers in front and behind the other wheels on the ground.
- After the vehicle is jacked up, be sure to support it on rigid racks . It is extremely dangerous to do any work on a vehicle raised on a jack alone, even for a small job that can be finished quickly.

(l) Observe the following precautions to avoid damage to the following parts:

(1) Do not open the cover or case of the ECU unless absolutely necessary. (If the IC terminals are touched, the IC may be destroyed by static electricity.)

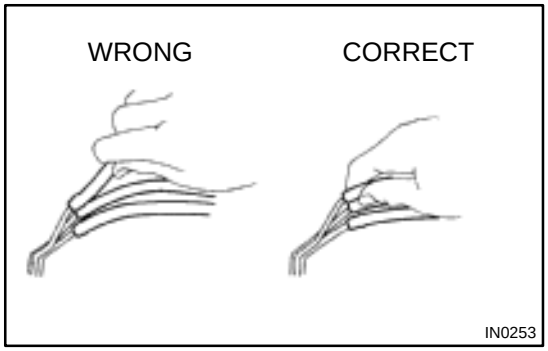

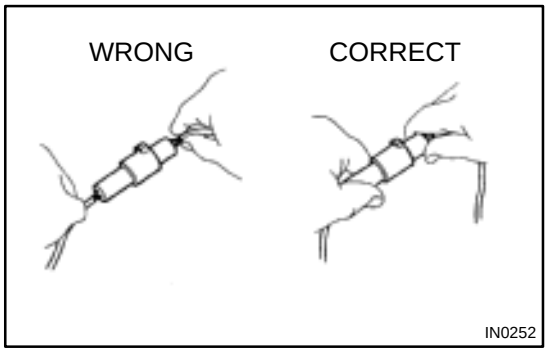

(2) To disconnect vacuum hoses, pull off the end, not the middle of the hose.

(3) To pull apart electrical connectors, pull on the connector itself, not the wires.

(4) Be careful not to drop electrical components, such as sensors or relays. If they are dropped on a hard floor, they should be replaced and not reused.

(5) When steam cleaning an engine, protect the electronic components, air filter and emission–related components from water.

(6) Never use an impact wrench to remove or install temperature switches or temperature sensors.

(7) When checking continuity at the wire connector, insert the tester probe carefully to prevent terminals from bending.

(8) When using a vacuum gauge, never force the hose onto a connector that is too large. Use a step–down adapter for adjustment. Once the hose has been stretched, it may leak air.

Example

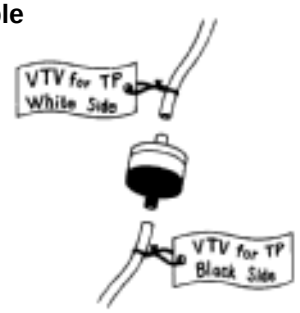

IN0002

(m) Installation and removal of vacuum hose:
  (1) When disconnecting vacuum hoses, use tags to identify how they should be reconnected to.
  (2) After completing a job, double check that the vacuum hoses are properly connected. A label under the hood shows the proper layout.

(n) Bleeding of hydraulic brake booster system:
When repairing the hydraulic brake booster or ABS, bleeding the air out of the hydraulic brake booster (See page BR–4).

(o) Unless otherwise stated, all resistance is measured at an ambient temperature of 20˚C (68˚F). Because the resistance may be outside specifications if measured at high temperatures immediately after the vehicle has been running, measurement should be made when the engine has cooled down.

IN0CP–15

VEHICLE LIFT AND SUPPORT LOCATIONS

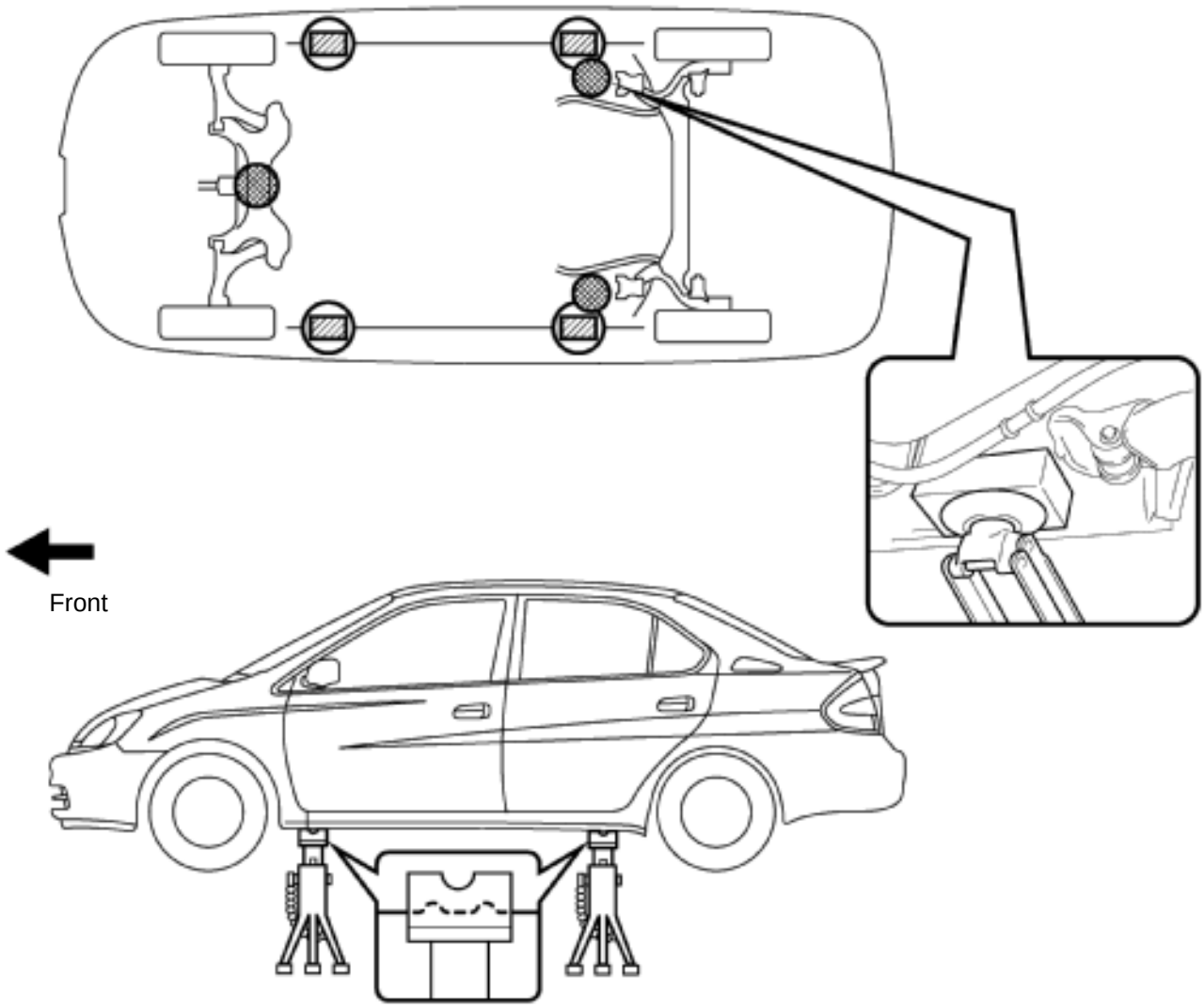

JACK POSITION

Front ..... Front crossmember
Rear ..... Body (Position shown in the illustration)

CAUTION :

- **When jacking–up the front and rear, make sure the vehicle is not carrying any extra weight.**
- **Do not position the jack at the center of the rear axle beam.**

PANTOGRAPH JACK POSITION

SUPPORT POSITION

Safety stand and swing arm type lift .....

N

B04744

PLATE TYPE LIFT

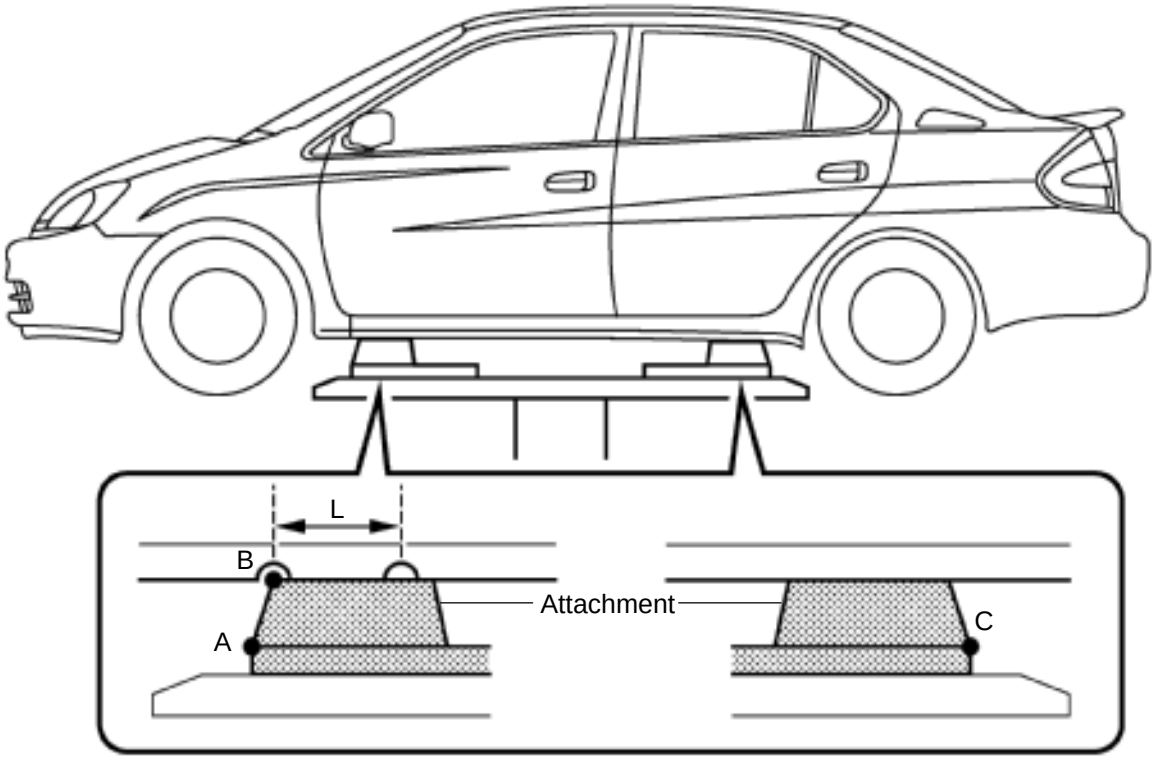

HINT :

Left and right set position	Place the vehicle over the center of the lift.
Front and rear set position	• Align the cushion gum ends of the plate with the attachment lower ends (A, C). • Align the attachment upper end (B) with the front jack supporting point (L).

Attachment dimensions

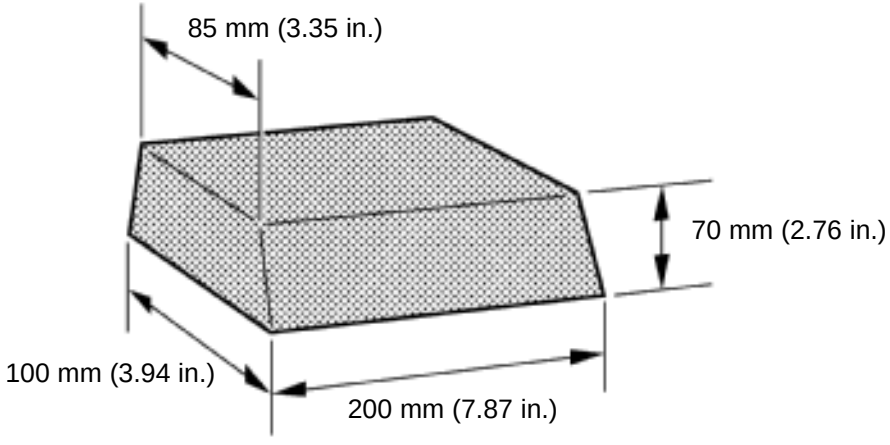

N

B04755

FOR ALL OF VEHICLES

IN0HO–01

PRECAUTION

1. PRECAUTIONS FOR HIGH–VOLTAGE CIRCUIT INSPECTION AND SERVICE

(a) Engineers to be engaged in inspection and servicing related to high–voltage systems should undergo special training.

(b) All the high–voltage wire harness connectors are colored orange: the HV battery and other high–voltage components are identified by the ”High Voltage” caution labels. Do not carelessly touch these wires and components.

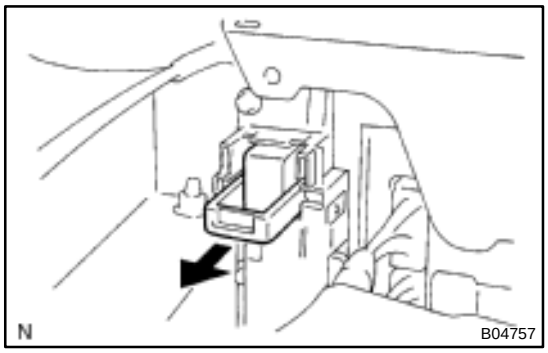

(c) Before inspecting or servicing the high–voltage system, be sure to take measures such as wearing insulated gloves and removing the service plug to prevent electrocution. Carry the removed service plug in your pocket to prevent other technicians from reinstalling it while you are servicing the vehicle.

(d) After removing the service plug, wait 5 minutes before touching any of the high–voltage connectors and terminals.

HINT:

The 5 minutes are required to discharge the high–voltage condenser inside the inverter.

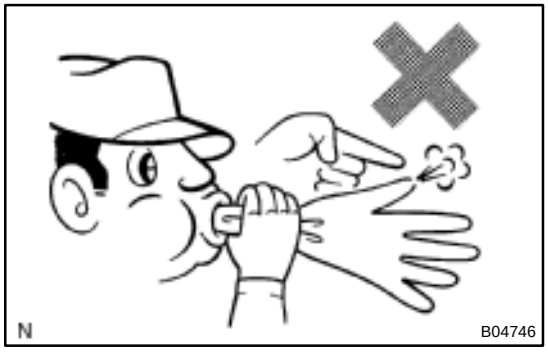

(e) Before wearing insulated gloves, make sure that they are not cracked, reptured, torn, or damaged in any other way. Do not wear wet insulated gloves.

(f) When servicing the vehicle, do not wear a metal object like a mechanical pencil or scale that may drop accidentally and cause a short circuit.

(g) Before touching a bare high–voltage terminal, wear insulated gloves and ensure that the terminal is not charged with electricity (approx. 0 V) using an electrical tester.

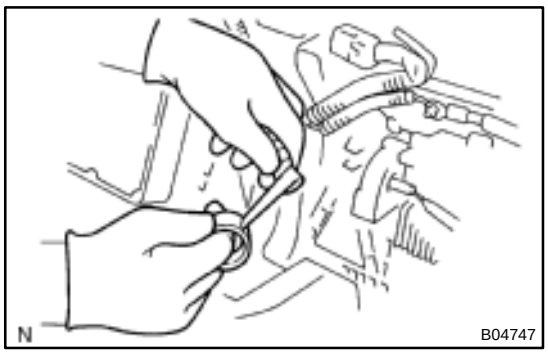

(h) After disconnecting or exposing a high–voltage connector or terminal, insulate it immediately using insulation tape.

(i) The screw of a high–voltage terminal should be tightened firmly to the specified torque. Both insufficient and excessive tightening torque can cause failure.

(j) Call other engineers' attention to the vehicle which high–voltage system is being inspected or repaired by hanging a "High Voltage Operation in Progress. Do Not Touch" sign (See the next page).

(k) After servicing the high–voltage system and before reinstalling the service plug, check again that you have not left a part or tool inside, that the high–voltage terminal screws are firmly tightened, and that the connectors are correctly engaged.

Person in charge: _____

CAUTION:
HIGH VOLTAGE. DO
NOT TOUCH DURING
OPERATION.

CAUTION:
HIGH VOLTAGE. DO NOT TOUCH DURING OPERATION.

Person in charge: _____

Copy this page and put it after folding on the roof of the vehicle in service.

B12120

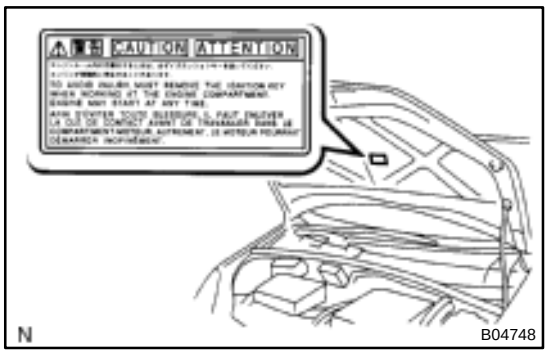

2. PRECAUTIONS TO BE OBSERVED WHEN INSPECTING OR SERVICING ENGINE COMPARTMENT

The PRIUS, automatically turns the engine ON and OFF when the ignition switch is set to the ON position provided that the READY light on the instrument panel is it.

Before inspecting or servicing the engine compartment, therefore, remove the ignition switch key.

3. ACTIONS TO BE TAKEN WHEN BATTERIES ARE DEPLETED

(a) Actions to be taken when the auxiliary battery is depleted

HINT:

The following phenomena indicate that the auxiliary battery is depleted:

- No display appears on the instrument panel when you turn the ignition switch to the ON position.
- The hybrid system does not start.
- The headlights are dark.
- The sound from the horn is weak.

NOTICE:

Never use a quick charger.

(1) Move the shift lever to the P position, and engage the parking brake.

(2) Remove the ignition key plate from the ignition switch.

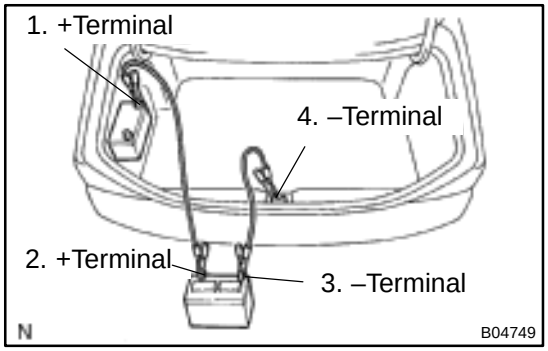

(3) Using a booster cable, connect the 12 V battery of the rescue vehicle and auxiliary battery of the stalled vehicle, as shown in the illustration.

(4) Start the engine of the rescue vehicle and run the engine at a speed slightly higher than the idling speed for 5 minutes to charge the auxiliary battery of the stalled vehicle.

(5) Turn the ignition switch of the stalled vehicle to the START position to start the hybrid system.

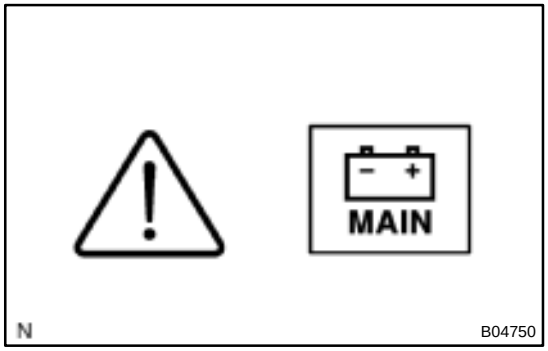

If the hybrid system fails to start and the master and HV battery warning lights come on, the HV battery may have been discharged.

(6) Disconnect the booster cable in the reverse way of the connection procedure.

NOTICE:

If the auxiliary battery needs to be replaced, replace it only with a 12 V battery specially designed for the use of the PRIUS.

(b) Actions to be taken when HV battery is depleted

NOTICE:

Leaving a vehicle alone for 2 – 3 months may cause electric discharge from HV battery.

When this happens, replace the HV battery.

4. INSPECTION MODE

HINT:

- The PRIUS automatically stops the engine while the vehicle is stopped with the engine warmed up and battery well charged if the A/C compressor operation is not required. Therefore, even if the vehicle stops for any reason such as a check of ignition timing, the inspection mode should be activated when continuous operation of the engine is required.
- The PRIUS has a skid control as traction control function. When the wheel speed of the front wheels exceeds that of the rear wheels, this function restrains the wheel speed of the front wheels. It is necessary to activate the inspection mode and reset the skid control when turning only the front wheels using a speedometer tester.

Activation inspection mode (Without using a hand–held tester)

(1) Perform the following (2) through (6) within 60 sec.
(2) Turn the ignition switch ON from OFF.
(3) With the shift lever in P position, fully depress the accelerator pedal 2 times.
(4) With the shift lever in N position, fully depress the accelerator pedal 2 times.
(5) With the shift lever in P position, fully depress the accelerator pedal 2 times.
(6) Activate the inspecting mode and check that the hybrid system error warning light on the multi–center display flashes.
(7) Turning the ignition switch to START starts the engine's continuous operation.

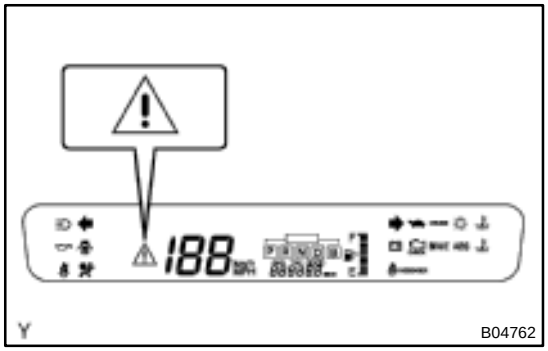

NOTICE:

- **The idling speed in the inspection mode is approx. 1,000 rpm. The number of revolutions will increase up to 1,500 rpm if the accelerator pedal is depressed to a degree of less than 60%, and up to 2,250 rpm in a case of 60% or more.**
- **If a diagnosis code is recorded when entering the inspection mode, the master warning light and the error warning light on the multi–center display is lit.**

- **When the master warning light is lit during operation in the inspection mode, deactivate the inspection mode and inspect the diagnosed area.**

HINT:
When continuous operation of the engine is required for such as an exhaust leakage inspection, it is advisable as an easier way to turn ON the FULL switch of the air conditioner.

5. SPECIAL NOTES FOR VEHICLE INSPECTION

(a) Vehicle conditions

(1) Before activating the service mode, turn the air conditioner off, start the engine with the shift lever at P position, and check that the engine stops within several seconds after starting. (Engine warm up check)

(2) Activate the service mode and inspect the vehicle. The shift position for each test is as follows:

Test item	Shift lever position
1. Vehicle straight traveling test (side slip inspection)	D
2. Braking force test	N
3. Speedometer test	D
4. Exhaust gas test (idling)	P
5. Headlight test	P

(3) Reset the service mode immediately after completion of inspection.

NOTICE:
Traveling on a road without resetting the service mode may damage the transaxle.

(b) Special notes for speedometer test

NOTICE:
Rapid starting or quick acceleration/deceleration based on the speedometer tester without load setting may damage the transaxle.

(1) Depress the accelerator pedal slowly and gradually accelerate at the time of measurement.

(2) After the measurement, use the brake to decelerate gradually and stop.

(c) Special note for using the chassis dynamometer
Always set an appropriate load before starting the test.

NOTICE:
Rapid starting or quick acceleration/deceleration with insufficient load may damage the transaxle.

6. ACTIONS TO BE TAKEN FOR VEHICLE DAMAGED BY IMPACT

(a) Items to be prepared (For operation at the site of accident)

- Protective clothing (Insulated gloves, rubber gloves, goggles, and safety shoes)
- Saturated boric acid solution 20 L (Procure 800 g of boric acid powder, put it into a container, and dissolve it in water.)
- Red litmus paper
- ABC fire extinguisher (Applicable to both oil flames and electrical flames)
- Waste rags or old towels (For wiping off the electrolyte)
- Vinyl tape (For insulating cable)
- Electrical tester

(b) Actions to be taken at the place of accident

(1) Wear insulated or rubber gloves, goggles and safety shoes.

(2) Do not touch a bare cable that could be a high–voltage cable. If you need to touch it, or if you have a danger of making an accidental contact, wear insulated gloves, measure the voltage between the cable and body ground using an electrical tester, and insulate the cable using vinyl tape.

(3) If the vehicle catches fire, use a ABC fire extinguisher to extinguish the fire. Trying to extinguish the fire using only a small amount of water can be more dangerous than effective: either use a greater amount of water from a fire hydrant or wait for the fire fighters.

(4) If the vehicle is partially submerged in water, do not touch the service plug or any of the high–voltage components and cables because of the danger of electrocution. If you need to touch them, do so only after pulling the vehicle completely out of water.

(5) Check the HV battery and nearby area for any leakage of the electrolyte. Do not touch any leaking liquid because it could be the highly alkaline electrolyte. If you need to wipe it off (using rags etc.), do so only after completing the following procedure: wear the rubber gloves and goggles, neutralize the electrolyte with saturated boric acid solution, and finally apply a red litmus paper to make sure that it does not turn blue.

(6) If a damage to any of the high–voltage components and cables is suspected, cut the high–voltage circuit using the procedure below.

High–voltage Part and Wiring

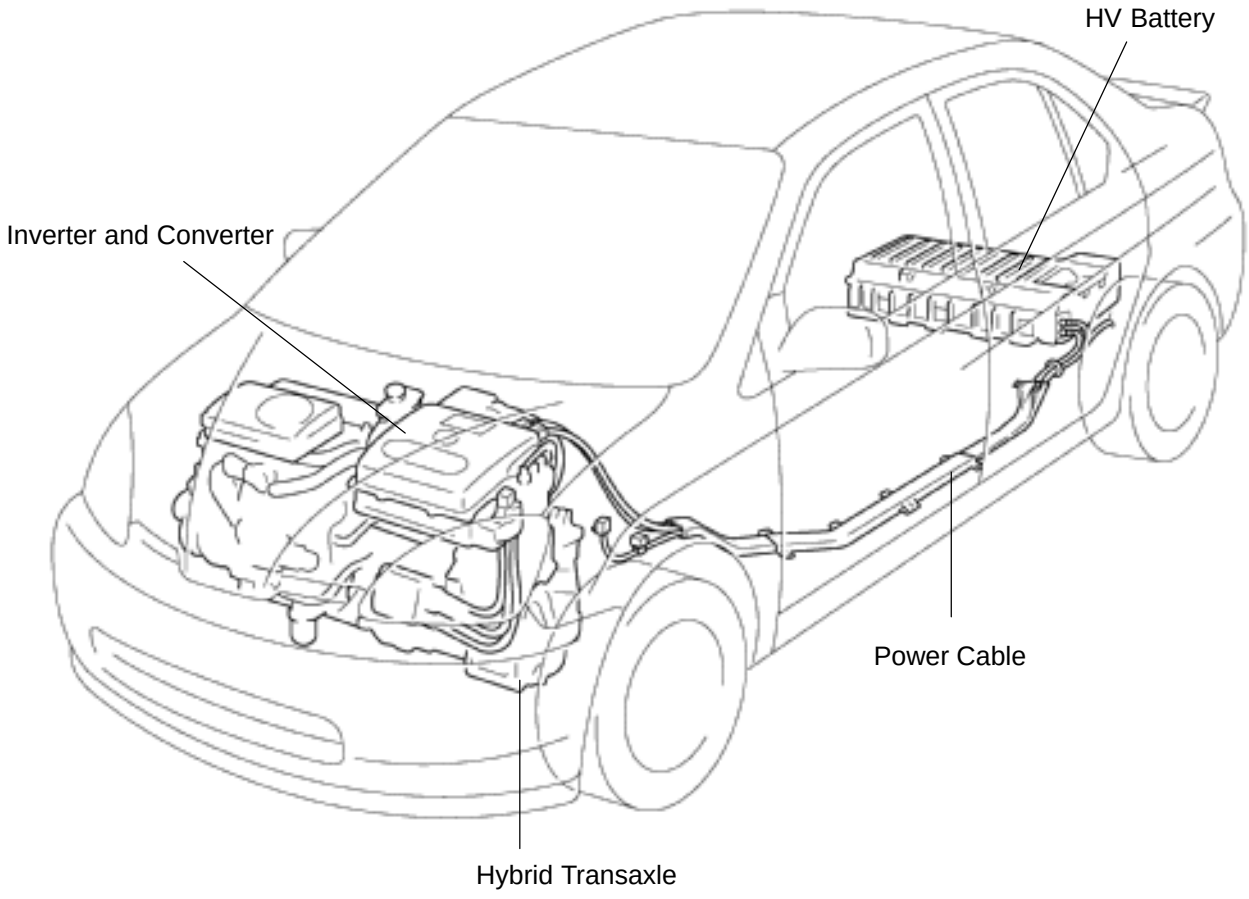

- Move the shift lever to the P position and engage the parking brake.
- Remove the ignition key. Then disconnect the cable from the negative (–) terminal of the auxiliary battery.

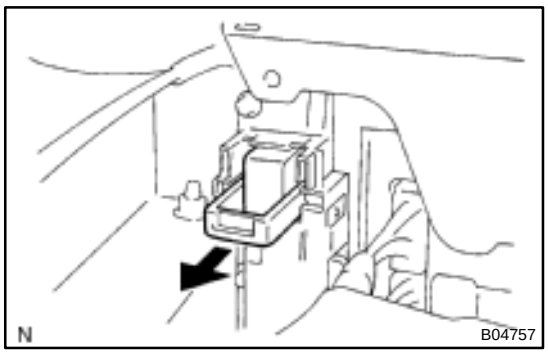

- Remove the service plug with the insulated gloves on.

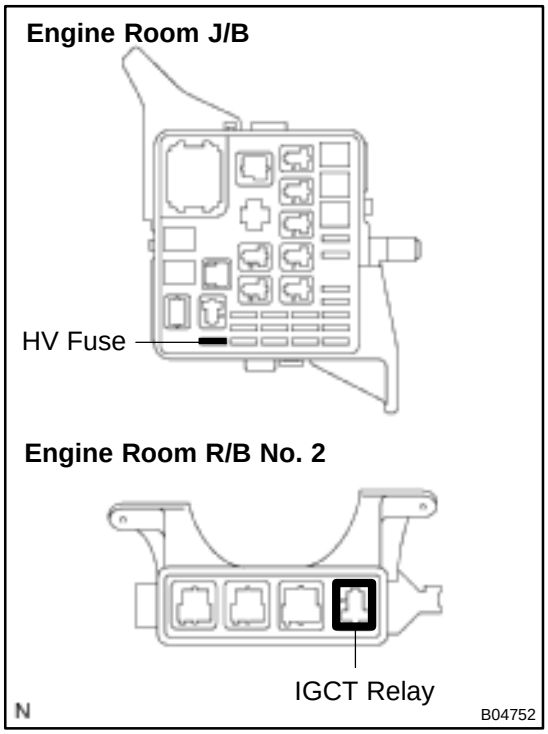

If the service plug cannot be removed due to damage to the rear portion of the vehicle, remove the HV fuse or IGCT relay instead.

(c) Moving the damaged vehicle

HINT:

If any of the following applies, tow the vehicle away using a tow truck lorry.

- One or more of the high–voltage components and cables is damaged.
- The driving, traction, or fuel system is damaged.

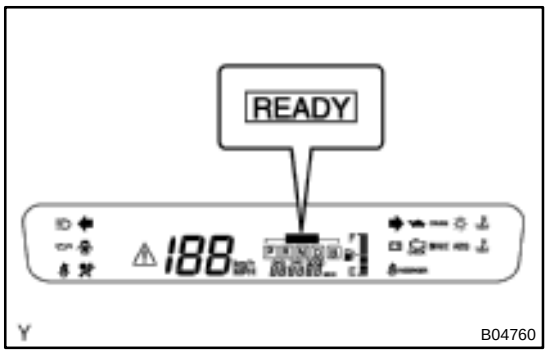

- The READY light is not lit when you turn ignition key to the ON position.

NOTICE:

- **Before towing the vehicle away using a break down lorry, disconnect the cable from the negative (–) terminal of the auxiliary battery and remove the service plug.**
  Only if none of the above applies and you see no problems that might affect the driving operation, you are allowed to drive the vehicle away from the place of accident.
- **Preform the procedure below if the READY light goes off or you detect an abnormal noise, abnormal smell, or strong vibration while traveling:**
  (1) Park the vehicle in a safe place.
  (2) Move the shift lever to the P position and engage the parking brake.
  (3) Disconnect the cable from the negative (–) terminal of the auxiliary battery.
  (4) Remove the service plug with insulated gloves on.

(d) Actions required after moving the damaged vehicle

If you see any liquid on the road surface, it could be the leakage of the highly alkaline electrolyte.

Wearing rubber gloves and goggles, apply a red litmus paper to the liquid. If the litmus paper turns blue, neutralize the liquid using the saturated boric acid solution and reapply a red litmus paper to make sure that it does not turn blue. Then wipe the liquid off from the road surface using waste rags, etc.

(e) Items to be prepared (When repairing damaged vehicles)

- Protective clothing (Insulated gloves, rubber gloves, goggles, and safety shoes)
- Saturated boric acid solution 20 L (Procure 800 g of boric acid powder, put it into a container, and dissolve it in water.)
- Red litmus paper
- Waste rags or old towels (For wiping off the electrolyte)
- Vinyl tape (For insulating cable)
- Electrical tester

(f) Precautions to be observed when servicing the damaged vehicle:

(1) Wear insulated or rubber gloves, goggles, and safety shoes.

(2) Do not touch a bare cable that could be a high–voltage cable. If you need to touch it, or if you have a danger of making an accidental contact, wear insulated gloves, measure the voltage between the cable and the body ground using an electrical tester, and insulate the cable using a vinyl tape.

(3) Check the HV battery and nearby area for leakage. If you find any liquid, it could be the leakage of the highly alkaline electrolyte. Wear rubber gloves and goggles, and then apply a red litmus paper to the leak. If the litmus paper turns blue, neutralize the liquid using the saturated boric acid solution and reapply a red litmus paper to make sure that it does not turn blue. Then wipe the liquid off using waste rags etc.

(4) If the electrolyte adheres to your skin, wash the skin immediately using the saturated boric acid solution or large amounts of water. If the electrolyte adheres to an article of clothing, take it off immediately.

(5) If the electrolyte comes into contact with your eyes, call out loudly for help. Do not rub your eyes but wash them with the saturated boric acid solution or large amounts of water and seek medical care.

(6) If a damage to any of the high–voltage components and cables is suspected, cut the high–voltage circuit using the procedure below:
- Move the shift lever to the P position and engage the parking brake.
- Remove the ignition key. Then disconnect the cable from the negative (–) terminal of the auxiliary battery.
- Wear insulated gloves, and then remove the service plug.
- If you cannot remove the service plug due to damage to the rear portion of the vehicle, remove the HV fuse or IGCT relay instead.

(g) Precautions to be taken when disposing of the vehicle
When scrapping the vehicle, remove the HV battery from the vehicle and return it through the route specified by the manufacturer. The same applies to any damaged HV battery.

(h) Precautions to be observed when towing
Tow the damaged vehicle with its front wheels or its front and rear wheels lifted off the ground.

NOTICE:

Towing the damaged vehicle with its front wheels on the ground may cause the motor to generate electricity. This electricity could, depending on the nature of the damage, leak and cause a fire.

(i) Towing with 4 wheels on the ground

NOTICE:

- **If you have to tow the damaged vehicle using a rope, do it at a speed below 30 km/h. Such towing operation is allowed only to cover very short distance, such as the distance to a tow truck lorry, for example.**
- **Set the ignition switch to the ACC position and shift lever to the N position.**
- **If you detect any abnormality in the damaged vehicle during the towing operation, stop the towing operation immediately.**

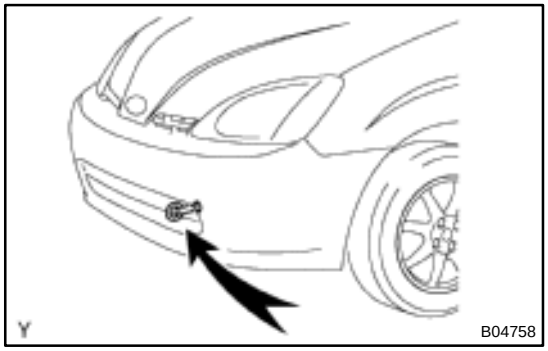

(j) Towing eyelet
(1) Install the hook.
(2) Hook a rope onto the illustrated point for towing.

7. FOR VEHICLES EQUIPPED WITH SRS AIRBAG AND SEAT BELT PRETENSIONER

(a) The PRIUS is equipped with an SRS (Supplemental Restraint System), such as the driver airbag, front passenger airbag assembly, side airbag assembly and seat belt pretensioner.

Failure to carry out service operations in the correct sequence could cause the supplemental restraint system to unexpectedly deploy during servicing, possibly leading to a serious accident.

Further, if a mistake is made in servicing the supplemental restraint system, it is possible the SRS may fail to operate when required. Before servicing (including removal or installation of parts, inspection or replacement), be sure to read the following items carefully, then follow the correct procedure described in this manual.

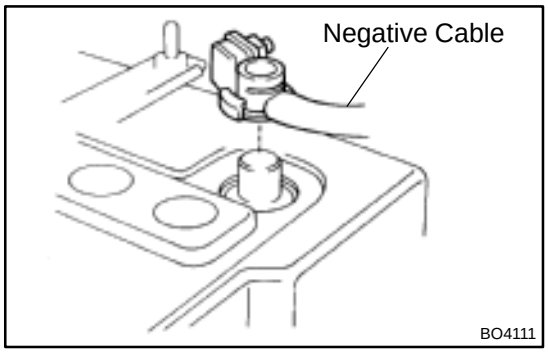

(b) GENERAL NOTICE

(1) Malfunction symptoms of the supplemental restraint system are difficult to confirm, so the diagnostic trouble codes become the most important source of information when troubleshooting. When troubleshooting the supplemental restraint system, always inspect the diagnostic trouble codes before disconnecting the battery (See page DI–497).

(2) Work must be started after 90 seconds from the time the ignition switch is turned to the ”LOCK” position and the negative (–) terminal cable is disconnected from the battery.

(The supplemental restraint system is equipped with a back–up power source so that if work is started within 90 seconds of disconnecting the negative (–) terminal cable from the battery, the SRS may deploy.)

When the negative (–) terminal cable is disconnected from the battery, memory of the clock and audio systems will be cancelled. So before starting work, make a record of the contents memorized by the each memory system. Then when work is finished, reset the clock and audio systems as before.

To avoid erasing the memory of each memory system, never use a back–up power supply from another battery.

(3) Even in cases of a minor collision where the SRS does not deploy, the steering wheel pad, front passenger airbag assembly, side airbag assembly and seat belt pretensioner should be inspected (See page RS–14, RS–28, RS–63 and BO–92).
(4) Never use SRS parts from another vehicle. When replacing parts, replace them with new parts.
(5) Before repairs, remove the airbag sensor if shocks are likely to be applied to the sensor during repairs.
(6) Never disassemble and repair the airbag sensor assembly, steering wheel pad, front passenger airbag assembly, side airbag assembly or seat belt pretensioner.
(7) If the airbag sensor assembly, steering wheel pad, front passenger airbag assembly, side airbag assembly or seat belt pretensioner has been dropped, or if there are cracks, dents or other defects in the case, bracket or connector, replace them with new ones.
(8) Do not directly expose the airbag sensor assembly, steering wheel pad, front passenger airbag assembly or seat belt pretensioner to hot air or flames.
(9) Use a volt/ohmmeter with high impedance (10 kΩ/V minimum) for troubleshooting of the electrical circuit.
(10) Information labels are attached to the periphery of the SRS components. Follow the instructions on the notices.
(11) After work on the supplemental restraint system is completed, check the SRS warning light (See page DI–497).

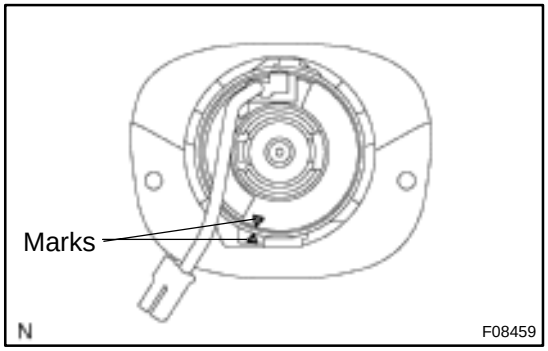

(c) SPIRAL CABLE (in Combination Switch)
The steering wheel must be fitted correctly to the steering column with the spiral cable at the neutral position, otherwise cable disconnection and other troubles may result. Refer to SR–14 of this manual concerning correct steering wheel installation.

(d) STEERING WHEEL PAD (with Airbag)

(1) When removing the steering wheel pad or handling a new steering wheel pad, it should be placed with the pad top surface facing up.
Storing the pad with its metallic surface facing upward may lead to a serious accident if the airbag deploys for some reason. In addition do not store a steering wheel pad on top of another one.

(2) Never measure the resistance of the airbag squib. (This may cause the airbag to deploy, which is very dangerous.)

(3) Grease should not be applied to the steering wheel pad and the pad should not be cleaned with detergents of any kind.

(4) Store the steering wheel pad where the ambient temperature remains below 93˚C (200˚F), without high humidity and away from electrical noise.

(5) When using electric welding, first disconnect the airbag connector (yellow color and 2 pins) under the steering column near the combination switch connector before starting work.

(6) When disposing of a vehicle or the steering wheel pad alone, the airbag should be deployed using an SST before disposal (See page RS–16).
Carry out the operation in a safe place away from electrical noise.

Example:

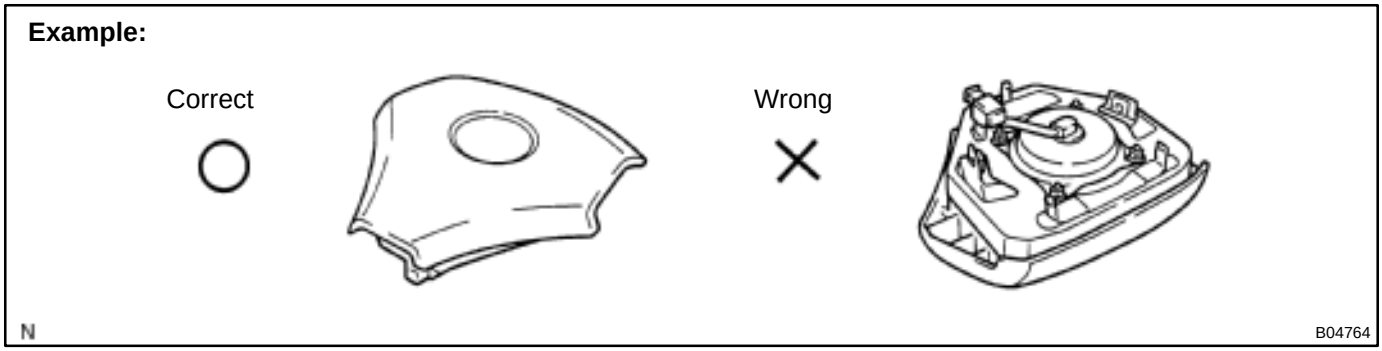

Example:

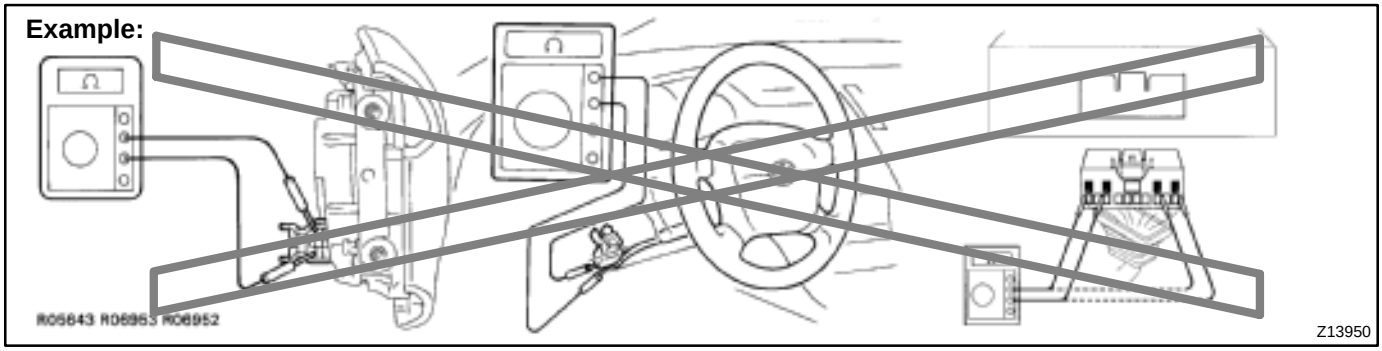

(e) FRONT PASSENGER AIRBAG ASSEMBLY

(1) Always store a removed or new front passenger airbag assembly with the airbag deployment direction facing up.
Storing the airbag assembly with the airbag deployment direction facing down could cause a serious accident if the airbag inflates.

(2) Never measure the resistance of the airbag squib. (This may cause the airbag to deploy, which is very dangerous.)

(3) Grease should not be applied to the front passenger airbag assembly and the airbag door should not be cleaned with detergents of any kind.

(4) Store the airbag assembly where the ambient temperature remains below 93˚C (200˚F), without high humidity and away from electrical noise.

(5) When using electric welding, first disconnect the airbag connector (yellow color and 2 pins) installed on the assembly before starting work.

(6) When disposing of a vehicle or the airbag assembly alone, the airbag should be deployed using an SST before disposal (See page RS–30).
Perform the operation in a safe place away from electrical noise.

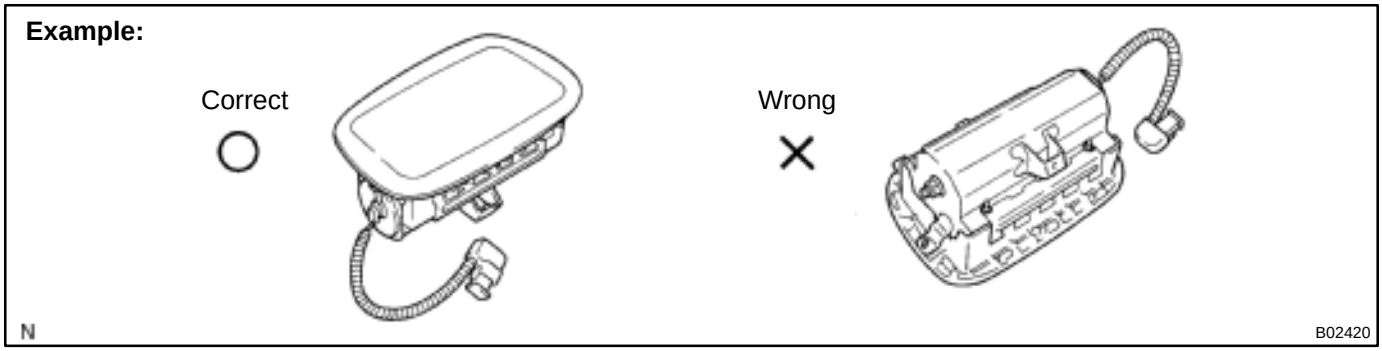

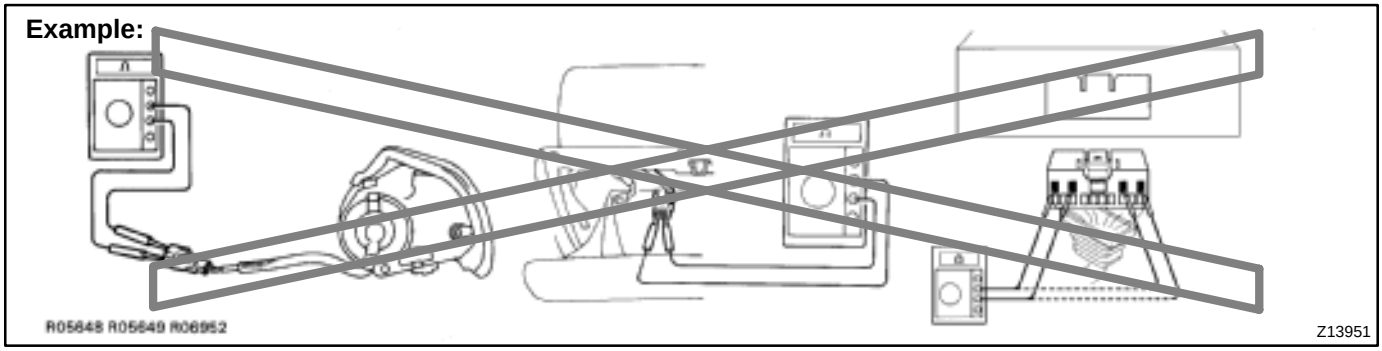

(f) SIDE AIRBAG ASSEMBLY

(1) Always store a removed or new side airbag assembly with the airbag deployment direction facing up. Storing the airbag assembly with the airbag deployment direction facing down could cause a serious accident if the airbag deploys.

(2) Never measure the resistance of the airbag squib. (This may cause the airbag to deploy, which is very dangerous.)

(3) Grease should not be applied to the side airbag assembly and the surface should not be cleaned with detergents of any kind.

(4) Store the airbag assembly where the ambient temperature remains below 93˚C (200˚F), without high humidity and away from electrical noise.

(5) When using electric welding, first disconnect the airbag connector (yellow color and 2 pins) under the seat before starting work.

(6) When disposing of a vehicle or the side airbag assembly alone, the airbag should be deployed using an SST before disposal (See page RS–42). Perform the operation in a safe place away from electrical noise.

Example:

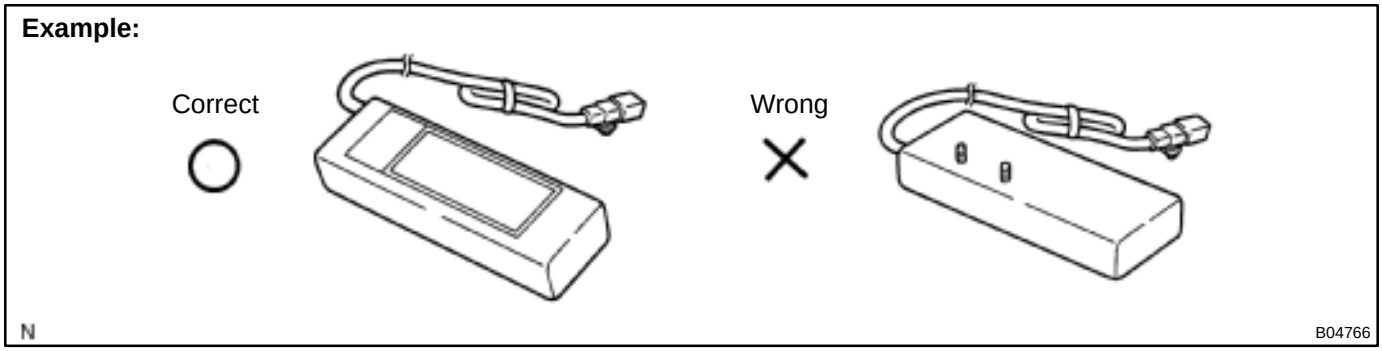

Example:

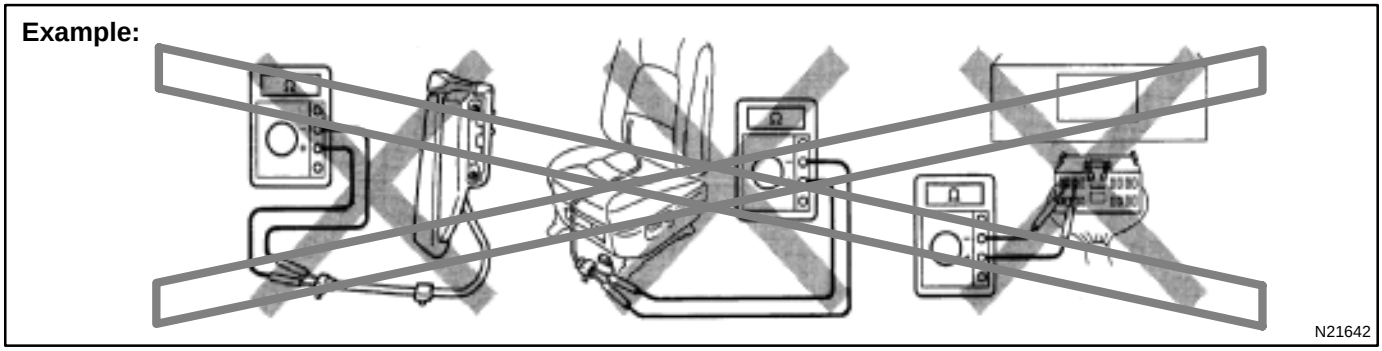

(g) SEAT BELT PRETENSIONER

(1) Never measure the resistance of the seat belt pretensioner. (This may cause the seat belt pretensioner to activate, which is very dangerous.)

(2) Never disassemble the seat belt pretensioner.

(3) Never install the seat belt pretensioner in another vehicle.

(4) Store the seat belt pretensioner where the ambient temperature remains below 80°C (176°F) and away from electrical noise without high humidity.

(5) When using electric welding, first disconnect the connector (yellow color and 2 pins) before starting work.

(6) When disposing of a vehicle or the seat belt pretensioner alone, the seat belt pretensioner should be activated before disposal (See page BO–93). Perform the operation in a safe place away from electrical noise.

(7) The seat belt pretensioner is hot after activation, so let it cool down sufficiently before the disposal. However never apply water to the seat belt pretensioner.

Example:

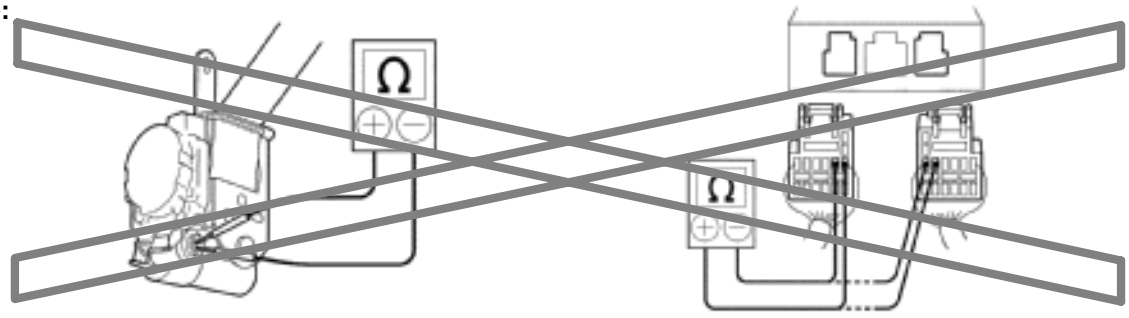

B02121

(h) AIRBAG SENSOR ASSEMBLY

(1) Never reuse the airbag sensor assembly involved in a collision when the SRS has deployed.

(2) The connectors to the airbag sensor assembly should be connected or disconnected with the sensor mounted on the floor. If the connectors are connected or disconnected while the airbag sensor assembly is not mounted to the floor, it could cause undesired ignition of the supplemental restraint system.

(3) Work must be started after 90 seconds from the time the ignition switch is turned to the ”LOCK” position and the negative (–) terminal cable is disconnected from the battery, even if only loosing the set bolts of the airbag sensor assembly.

(i) WIRE HARNESS AND CONNECTOR

The SRS wire harness is integrated with the instrument panel wire harness assembly. All the connectors in the system are a standard yellow color. If the SRS wire harness becomes disconnected or the connector becomes broken due to an accident, etc., repair or replace it as shown on page RS–66.

8. FOR VEHICLES EQUIPPED WITH A CATALYTIC CONVERTER

CAUTION:

If large amount of unburned gasoline flows into the converter, it may overheat and create a fire hazard. To prevent this, observe the following precautions and explain them to your customer.

(a) Use only unleaded gasoline.

(b) Avoid prolonged idling.
Avoid running the engine at idle speed for more than 20 minutes.

(c) Avoid spark jump test.
(1) Perform spark jump test only when absolutely necessary. Perform this test as rapidly as possible.
(2) While testing, never race the engine.

(d) Avoid prolonged engine compression measurement.
Engine compression tests must be done as rapidly as possible.

(e) Do not run engine when fuel tank is nearly empty.
This may cause the engine to misfire and create an extra load on the converter.

(f) Avoid coasting with ignition turned off.

(g) Do not dispose of used catalyst along with parts contaminated with gasoline or oil.

9. IF VEHICLE IS EQUIPPED WITH MOBILE COMMUNICATION SYSTEM

For vehicles with mobile communication systems such as two–way radios and cellular telephones, observe the following precautions.

(1) Install the antenna as far as possible away from the ECU and sensors of the vehicle's electronic system.

(2) Install the antenna feeder at least 20 cm (7.87 in.) away from the ECU and sensors of the vehicle's electronic systems. For details about ECU and sensors locations, refer to the section on the applicable component.

(3) Avoid winding the antenna feeder together with other wiring as much as possible, and also avoid running the antenna feeder parallel with other wire harnesses.

(4) Check that the antenna and feeder are correctly adjusted.

(5) Do not install powerful mobile communications system.

10. FOR USING OBD II SCAN TOOL OR TOYOTA HAND–HELD TESTER

CAUTION:

Observe the following items for safety reasons:

- **Before using the OBD II scan tool or TOYOTA hand–held tester, the OBD II scan tool's instruction book or TOYOTA hand–held tester's operator manual should be read thoroughly.**
- **Be sure to route all cables securely when driving with the OBD II scan tool or TOYOTA hand–held tester connected to the vehicle. (i.e. Keep cables away from feet, pedals, steering wheel and shift lever.)**
- **Two persons are required when test driving with the OBD II scan tool or TOYOTA hand–held tester, one person to drive the vehicle and the other person to operate the OBD II scan tool or TOYOTA hand–held tester.**

HOW TO TROUBLESHOOT ECU CONTROLLED SYSTEMS

IN05Y–22

GENERAL INFORMATION

A large number of ECU controlled systems are used in the PRIUS. In general, the ECU controlled system is considered to be a very intricate system requiring a high level of technical knowledge and expert skill to troubleshoot. However, the fact is that if you proceed to inspect the circuits one by one, troubleshooting of these systems is not complex. If you have adequate understanding of the system and a basic knowledge of electricity, accurate diagnosis and necessary repair can be performed to locate and fix the problem. This manual is designed through emphasis of the above standpoint to help service technicians perform accurate and effective troubleshooting, and is compiled for the following major ECU controlled systems:
The troubleshooting procedure and how to make use of it are described on the following pages.

System	Page
6. Engine	DI–1
7. Hybrid Vehicle Control System	DI–174
8. HV Battery Control System	DI–312
9. Anti–Lock Brake System With EBD & RBS	DI–351
10.Electric Motor Power Steering	DI–452
11.Supplemental Restraint System	DI–495
12.Cruise Control System	DI–640
13.Combination Meter System	DI–662
14.Body Control System	DI–678
15.Driver Door Control System	DI–730
16.Multiplex Communication System	DI–750
17.Navigation System	DI–789
18.Air Conditioning System	DI–864

FOR USING OBD II SCAN TOOL OR TOYOTA HAND–HELD TESTER

- Before using the scan tool or tester, the scan tool's instruction book or tester's operator manual should be read thoroughly.
- If the scan tool or tester cannot communicate with ECU controlled systems when you have connected the cable of the scan tool or tester to DLC3, turned the ignition switch ON and operated the scan tool, there is a problem on the vehicle side or tool side.
  (1) If communication is normal when the tool is connected to another vehicle, inspect the diagnosis data link line (Bus⊕line) or ECU power circuit of the vehicle.
  (2) If communication is still not possible when the tool is connected to another vehicle, the problem is probably in the tool itself, so perform the Self Test procedures outline in the Tester Operator's Manual.

IN05W–24

HOW TO PROCEED WITH TROUBLESHOOTING

Carry out troubleshooting in accordance with the procedure on the following page. Here, only the basic procedure is shown. Details are provided in Diagnostics section, showing the most effective methods for each circuit. Confirm the troubleshooting procedures first for the relevant circuit before beginning troubleshooting of that circuit.

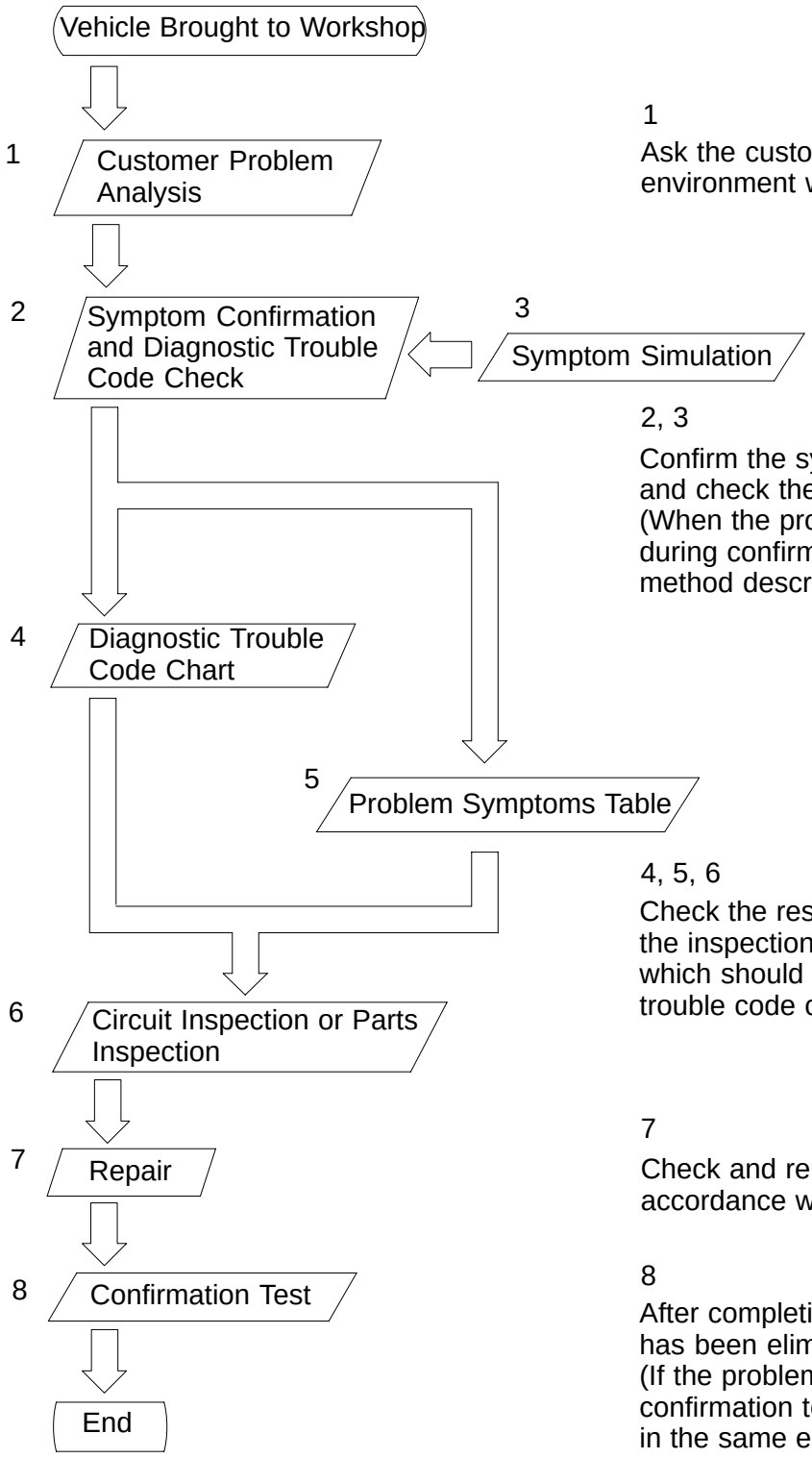

1

Ask the customer about the conditions and the environment when the problem occurred.

2, 3

Confirm the symptoms and the problem conditions, and check the diagnostic trouble codes.
(When the problem symptoms do not appear during confirmation, use the symptom simulation method described later on.)

4, 5, 6

Check the results obtained in Step 2, then confirm the inspection procedure for the system or the part which should be checked using the diagnostic trouble code chart or the problem symptoms table.

7

Check and repair the affected system or part in accordance with the instructions in Step 6.

8

After completing repairs, confirm that the problem has been eliminated.
(If the problem is not reproduced, perform the confirmation test under the same conditions and in the same environment as when it occurred for the first time.)

1. CUSTOMER PROBLEM ANALYSIS

In troubleshooting, the problem symptoms must be confirmed accurately and all preconceptions must be cleared away in order to give an accurate judgment. To ascertain just what the problem symptoms are, it is extremely important to ask the customer about the problem and the conditions at the time it occurred.

Important Point in the Problem Analysis:

The following 5 items are important points in the problem analysis. Past problems which are thought to be unrelated and the repair history, etc. may also help in some cases, so as much information as possible should be gathered and its relationship with the problem symptoms should be correctly ascertained for reference in troubleshooting. A customer problem analysis table is provided in Diagnostics section for each system for your use.

Important Points in the Customer Problem Analysis

- What ——— Vehicle model, system name
- When ——— Date, time, occurrence frequency
- Where ——— Road conditions
- Under what conditions? ——— Running conditions, driving conditions, weather conditions
- How did it happen? ——— Problem symptoms

(Sample) Engine control system check sheet.

CUSTOMER PROBLEM ANALYSIS CHECK

ENGINE CONTROL SYSTEM Check Sheet

Inspector's Name _____

Customer's Name		**Model and Model Year**	
Driver's Name		**Frame No.**	
Data Vehicle Brought in		**Engine Model**	
License No.		**Odometer Reading**	km miles

Problem Symptoms	☐ **Engine does not Start**	☐ **Engine does not crank** ☐ **No initial combustion** ☐ **No complete combustion**
	☐ **Difficult to Start**	☐ **Engine cranks slowly** ☐ **Other** _____
	☐ **Poor Idling**	☐ **Incorrect first idle** ☐ **Idling rpm is abnormal** ☐ **High (rpm)** ☐ **Low (rpm)** ☐ **Rough idling** ☐ **Other** _____
	☐ **Poor Drive ability**	☐ **Hesitation** ☐ **Back fire** ☐ **Muffler explosion (after–fire)** ☐ **Surging** ☐ **Knocking** ☐ **Other** _____
	☐ **Engine Stall**	☐ **Soon after starting** ☐ **After accelerator pedal depressed** ☐ **After accelerator pedal released** ☐ **During A/C operation** ☐ **Shifting from N to D** ☐ **Other** _____
	☐ **Others**	

☐ **Constant** ☐ **Sometimes (times per day/month)**

2. SYMPTOM CONFIRMATION AND DIAGNOSTIC TROUBLE CODE CHECK

The diagnostic system in the PRIUS fulfills various functions. The first function is the Diagnostic Trouble Code Check in which a malfunction in the signal circuits to the ECU is stored in code in the ECU memory at the time of occurrence, to be output by the technician during troubleshooting. Another function is the Input Signal Check which checks if the signals from various switches are sent to the ECU correctly.
By using these check functions, the problem areas can be narrowed down quickly and troubleshooting can be performed effectively. Diagnostic functions are incorporated in the following systems in the PRIUS.

System	Diagnostic Trouble Code Check	Input Signal Check (Sensor Check)	Diagnostic Test Mode (Active Test)
Engine	○ (with Check Mode)	○	○
Hybrid Vehicle Control System	○	○	○
HV Battery Control System	○ (with Check Mode)	○	○
Anti–Lock Brake System With EBD & RBS	○	○	○
Electric Motor Power Steering	○		
Supplemental Restraint System	○		
Cruise Control System	○	○	
Multiplex Communication System	○		
Navigation System	○		
Air Conditioning System	○	○	

In diagnostic trouble code check, it is very important to determine whether the problem indicated by the diagnostic trouble code is still occurring or occurred in the past but returned to normal at present. In addition, it must be checked in the problem symptom check whether the malfunction indicated by the diagnostic trouble code is directly related to the problem symptom or not. For this reason, the diagnostic trouble codes should be checked before and after the symptom confirmation to determine the current conditions, as shown in the table below. If this is not done, it may, depending on the case, result in unnecessary troubleshooting for normally operating systems, thus making it more difficult to locate the problem, or in repairs not pertinent to the problem. Therefore, always follow the procedure in correct order and perform the diagnostic trouble code check.

DIAGNOSTIC TROUBLE CODE CHECK PROCEDURE

Diagnostic Trouble Code Check (Make a note of and then clear)	**Confirmation of Symptoms**	**Diagnostic Trouble Code Check**	**Problem Condition**
Diagnostic Trouble Code Display	Problem symptoms exist	Same diagnostic trouble code is displayed	Problem is still occurring in the diagnostic circuit
		Normal code is displayed	The problem is still occurring in a place other than in the diagnostic circuit (The diagnostic trouble code displayed first is either for a past problem or it is a secondary problem)
	No problem symptoms exist		The problem occurred in the diagnostic circuit in the past
Normal Code Display	Problem symptoms exist	Normal code is displayed	The problem is still occurring in a place other than in the diagnostic circuit
	No problem symptoms exist	Normal code is displayed	The problem occurred in a place other than in the diagnostic circuit in the past

Taking into account the points on the previous page, a flow chart showing how to proceed with troubleshooting using the diagnostic trouble code check is shown below. This flow chart shows how to utilize the diagnostic trouble code check effectively, then by carefully checking the results, indicates how to proceed either to diagnostic trouble code troubleshooting or to troubleshooting of problem symptoms table.

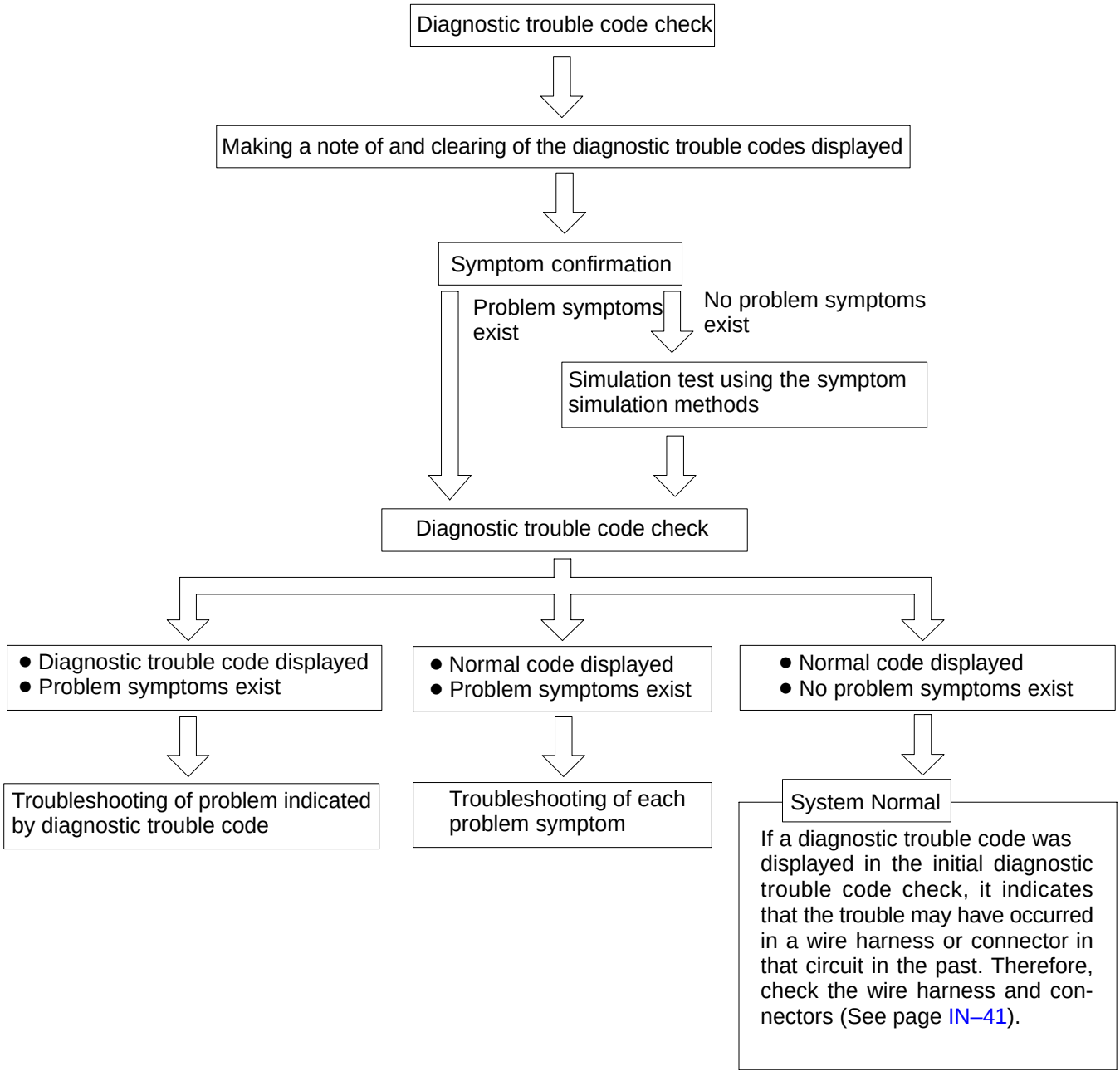

3. SYMPTOM SIMULATION

The most difficult case in troubleshooting is when there are no problem symptoms occurring. In such cases, a thorough customer problem analysis must be carried out, then simulate the same or similar conditions and environment in which the problem occurred in the customer's vehicle. No matter how much experience a technician has, or how skilled he may be, if he proceeds to troubleshoot without confirming the problem symptoms he will tend to overlook something important in the repair operation and make a wrong guess somewhere, which will only lead to a standstill. For example, for a problem which only occurs when the engine is cold, or for a problem which occurs due to vibration caused by the road during driving, etc., the problem can never be determined so long as the symptoms are confirmed with the engine hot condition or the vehicle at a standstill. Since vibration, heat or water penetration (moisture) is likely cause for problem which is difficult to reproduce, the symptom simulation tests introduced here are effective measures in that the external causes are applied to the vehicle in a stopped condition.

Important Points in the Symptom Simulation Test:

In the symptom simulation test, the problem symptoms should of course be confirmed, but the problem area or parts must also be found out. To do this, narrow down the possible problem circuits according to the symptoms before starting this test and connect a tester beforehand. After that, carry out the symptom simulation test, judging whether the circuit being tested is defective or normal and also confirming the problem symptoms at the same time. Refer to the problem symptoms table for each system to narrow down the possible causes of the symptom.

1	**VIBRATION METHOD: When vibration seems to be the major cause.**
CONNECTORS Slightly shake the connector vertically and horizontally. **WIRE HARNESS** Slightly shake the wire harness vertically and horizontally. The connector joint, fulcrum of the vibration, and body through portion are the major areas to be checked thoroughly.	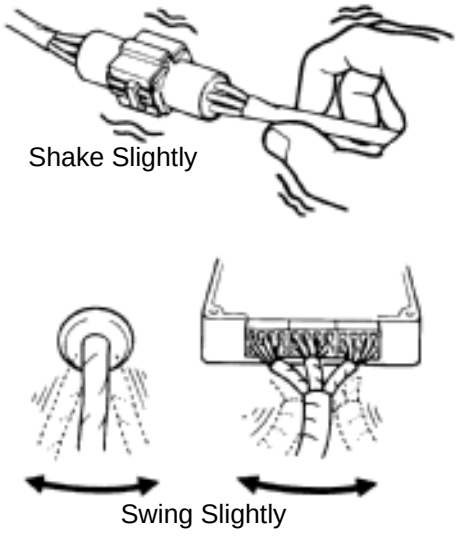
PARTS AND SENSOR Apply slight vibration with a finger to the part of the sensor considered to be the problem cause and check that the malfunction occurs. HINT: Applying strong vibration to relays may result in open relays.	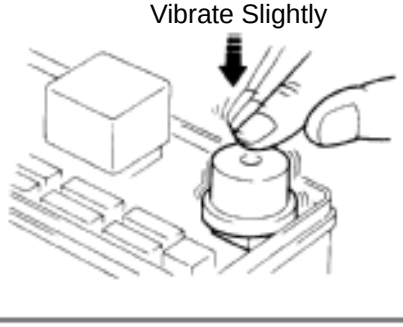

V07268

2	**HEAT METHOD: When the problem seems to occur when the suspect area is heated.**

Heat the component that is the likely cause of the malfunction with a hair dryer or similar object. Check to see if the malfunction occurs.

NOTICE:

(1) Do not heat to more than 60 ˚C (140 ˚F). (Temperature is limited not to damage the components.)

(2) Do not apply heat directly to parts in the ECU.

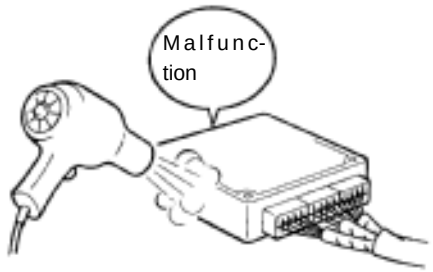

FI2334

3	**WATER SPRINKLING METHOD: When the malfunction seems to occur on a rainy day or in a high–humidity condition.**

Sprinkle water onto the vehicle and check to see if the malfunction occurs.

NOTICE:

(1) Never sprinkle water directly into the engine compartment, but indirectly change the temperature and humidity by applying water spray onto the radiator front surface.

(2) Never apply water directly onto the electronic components.

HINT:

If a vehicle is subject to water leakage, the leaked water may contaminate the ECU. When testing a vehicle with a water leakage problem, special caution must be taken.



FI6649

4	**OTHER: When a malfunction seems to occur when electrical load is excessive.**

Turn on all electrical loads including the heater blower, head lights, rear window defogger, etc. and check to see if the malfunction occurs.

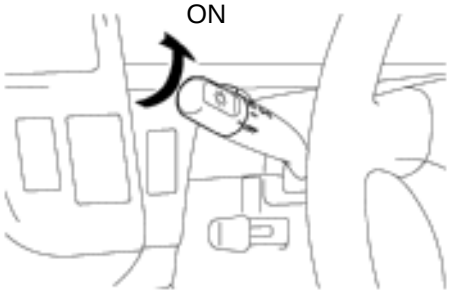

B02389

B02390

4. DIAGNOSTIC TROUBLE CODE CHART

The inspection procedure is shown in the table below. This table permits efficient and accurate troubleshooting using the diagnostic trouble codes displayed in the diagnostic trouble code check. Proceed with troubleshooting in accordance with the inspection procedure given in the diagnostic chart corresponding to the diagnostic trouble codes displayed. The engine diagnostic trouble code chart is shown below as an example.

- DTC No.
  Indicates the diagnostic trouble code.
- Page or Instructions
  Indicates the page where the inspection procedure for each circuit is to be found, or gives instructions for checking and repairs.

- Trouble Area
  Indicates the suspect area of the problem.

- Detection Item
  Indicates the system of the problem or contents of the problem.

DTC CHART (SAE Controlled)

HINT:
Parameters listed in the chart may not be exactly the same as your reading due to the type of instrument or other factors.

If a malfunction code is displayed during the DTC check mode, check the circuit for that code listed in the table below. For details of each code, turn to the page referred to under the "See page" for the respective "DTC No." in the DTC chart.

DTC No. (See page)	Detection Item	Trouble Area	MIL*	Memory
P0100 (DI–24)	Mass Air Flow Circuit Malfunction	● Open or short in mass air flow meter circuit ● Mass air flow meter ● ECM	○	○
P0101 (DI–28)	Mass Air Flow Circuit Range/ Performance Problem	● Mass air flow meter	○	○
P0110 (DI–29)	Intake Air Temp. Circuit Malfunction	● Open or short in intake air temp. sensor circuit ● Intake air temp. sensor ● ECM	○	○
P0115 (DI–33)	Engine Coolant Temp. Circuit Malfunction	● Open or short in engine coolant temp. sensor circuit ● Engine coolant temp. sensor ● ECM	○	○
P0116 (DI–37)	Engine Coolant Temp. Circuit Range/ Performance Problem	● Engine coolant temp. sensor ● Cooling system	○	○
	/Pedal Position Sensor/Switch nction	● Open or short in throttle position sensor circuit ● Throttle position sensor ● ECM		
	osition Sensor/ Switch rformance Prob-	● Throttle position sensor		

5. PROBLEM SYMPTOMS TABLE

The suspected circuits or parts for each problem symptom are shown in the table below. Use this table to troubleshoot the problem when a ”Normal” code is displayed in the diagnostic trouble code check but the problem is still occurring. Numbers in the table indicate the inspection order in which the circuits or parts should be checked.

HINT:

When the problem is not detected by the diagnostic system even though the problem symptom is present, it is considered that the problem is occurring outside the detection range of the diagnostic system, or that the problem is occurring in a system other than the diagnostic system.

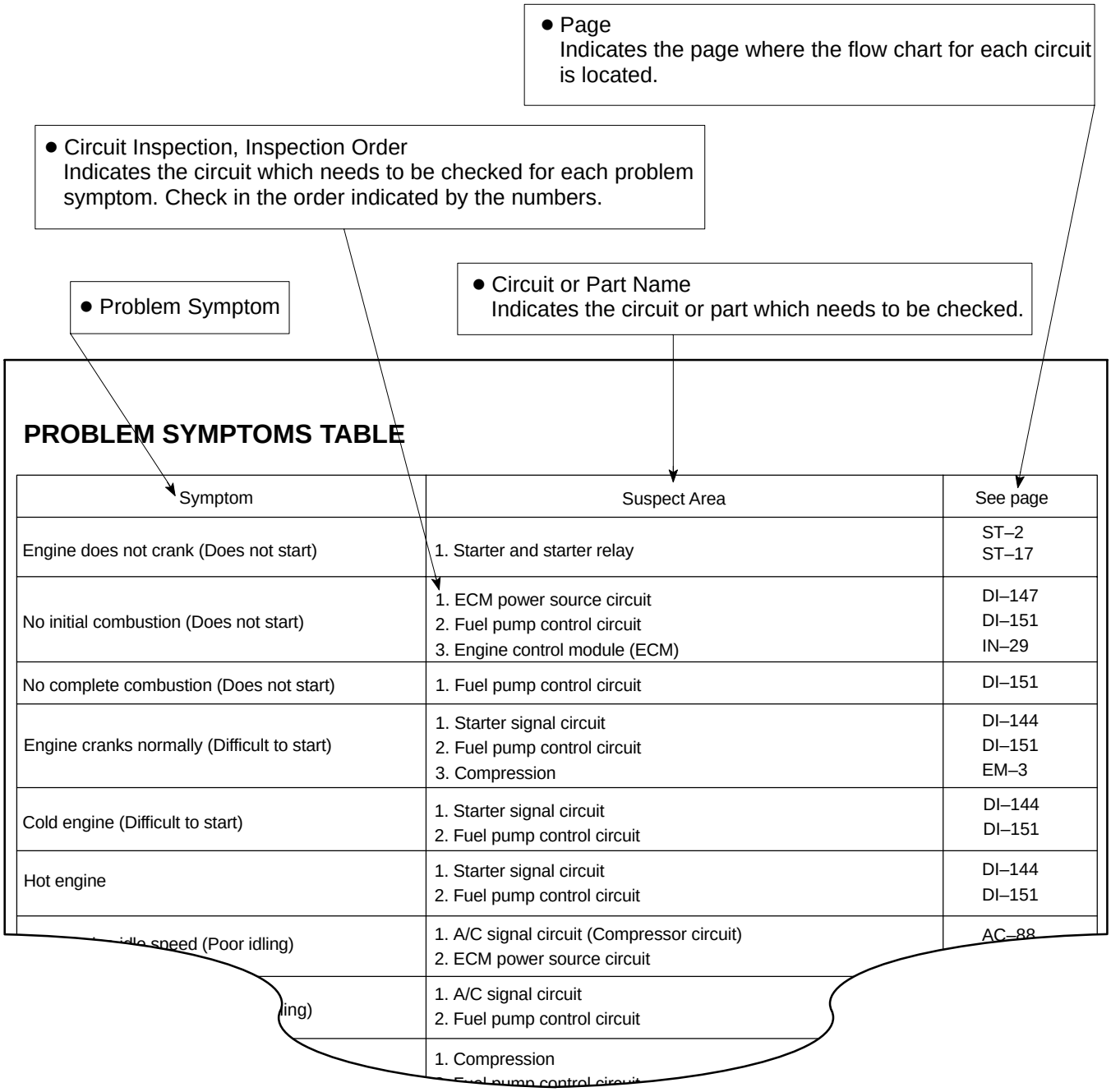

PROBLEM SYMPTOMS TABLE

Symptom	Suspect Area	See page
Engine does not crank (Does not start)	1. Starter and starter relay	ST–2 ST–17
No initial combustion (Does not start)	1. ECM power source circuit 2. Fuel pump control circuit 3. Engine control module (ECM)	DI–147 DI–151 IN–29
No complete combustion (Does not start)	1. Fuel pump control circuit	DI–151
Engine cranks normally (Difficult to start)	1. Starter signal circuit 2. Fuel pump control circuit 3. Compression	DI–144 DI–151 EM–3
Cold engine (Difficult to start)	1. Starter signal circuit 2. Fuel pump control circuit	DI–144 DI–151
Hot engine	1. Starter signal circuit 2. Fuel pump control circuit	DI–144 DI–151
idle speed (Poor idling)	1. A/C signal circuit (Compressor circuit) 2. ECM power source circuit	AC–88
ling)	1. A/C signal circuit 2. Fuel pump control circuit	
	1. Compression 2. Fuel pump control circuit	

6. CIRCUIT INSPECTION

How to read and use each page is shown below.

● Diagnostic Trouble Code No. and Detection Item

● Circuit Description
The major role and operation, etc. of the circuit and its component parts are explained.

DTC	P0325	Knock Sensor 1 Circuit Malfunction

CIRCUIT DESCRIPTION

Knock sensor is fitted to the cylinder block to detect engine knocking. This sensor contains a piezoelectric element which generates a voltage when it becomes deformed, which occurs when the cylinder block vibrates due to knocking. If engine knocking occurs, ignition timing is retarded to suppress it.

DTC No.	DTC Detecting Condition	Trouble Area
P0325	No knock sensor 1 signal to ECM with engine speed, 1,200 rpm or more.	● Open or short in knock sensor1 circuit ● Knock sensor 1 (looseness) ● ECM

If the ECM detects the above diagnosis conditions, it operates the fail safe function in which the corrective retard angle value is set to the maximum value.

● Indicates the diagnostic trouble code, diagnostic trouble code set parameter and suspect area of the problem.

WIRING DIAGRAM

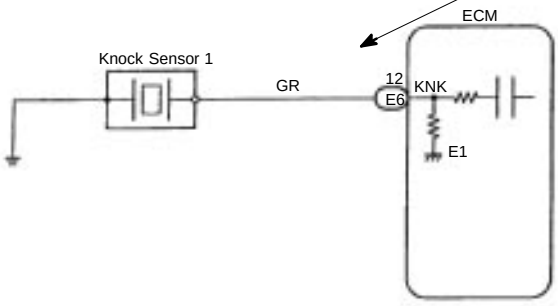

● Wiring Diagram
This shows a wiring diagram of the circuit.
Use this diagram together with ELECTRICAL WIRING DIAGRAM to thoroughly understand the circuit.
Wire colors are indicated by an alphabetical code.
B = Black, L = Blue, R = Red, BR = Brown,
LG = Light Green, V = Violet, G = Green,
O = Orange, W = White, GR = Gray, P = Pink,
Y = Yellow, SB = Sky Blue
The first letter indicates the basic wire color and the second letter indicates the color of the stripe.

V08423

● Indicates the position of the ignition switch during the check.

LOCK
Ignition Switch LOCK (OFF)

ON
Ignition Switch ON

START
Ignition Switch START

ACC
Ignition Switch ACC

● Inspection Procedure
Use the inspection procedure to determine if the circuit is normal or abnormal, and, if it is abnormal, use it to determine whether the problem is located in the sensors, actuators, wire harness or ECU.

INSPECTION PROCEDURE

1 **Check continuity between terminal KNK of ECM connector and body ground.**

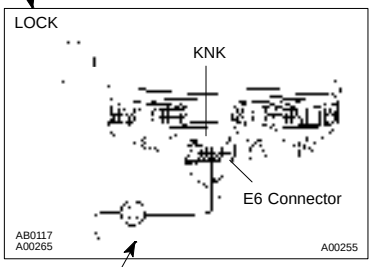

PREPARATION:
(a) Remove the glove compartment (See page SF–68).
(b) Disconnect the E6 connector of ECM.

CHECK:
Measure resistance between terminal KNK of ECM connector and body ground.

OK:
Resistance: 1 MΩ or higher

OK → **Go to step 3.**

NG

2 **Check knock sensor (See page SF–61).**

OK → **Replace knock sensor.**

● Indicates the place to check the voltage or resistance.
● Indicates the connector position to checked, from the front or back side.



Check from the connector back side. (with harness)



Check from the connector front side. (without harness)
In this case, care must be taken not to bend the terminals.

● Indicates the condition of the connector of ECU during the check.

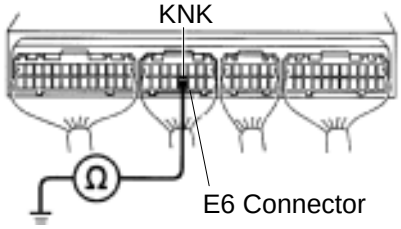

Connector being checked is connected.

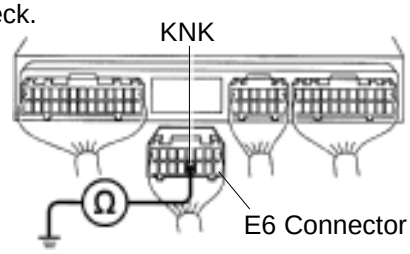

Connector being checked is disconnected.

V08425

IN05X–14

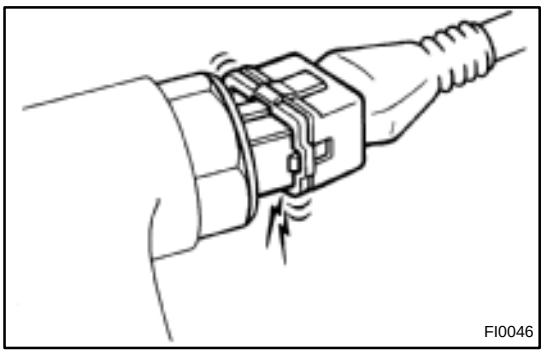
FI0046

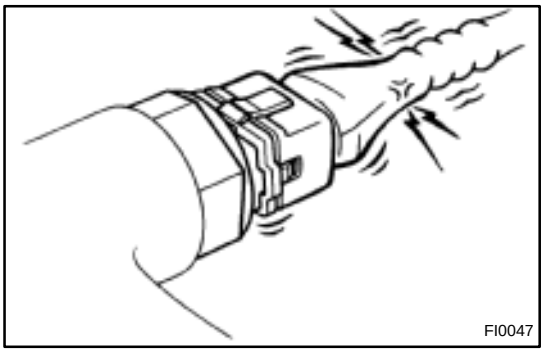
FI0047

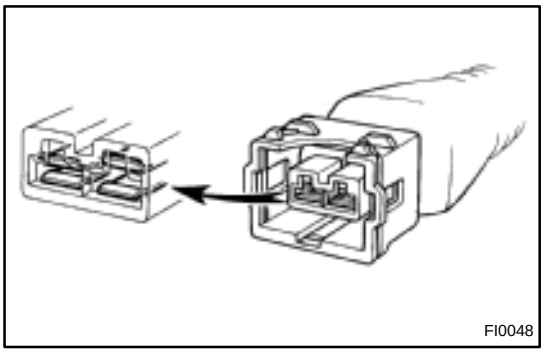
FI0048

HOW TO USE THE DIAGNOSTIC CHART AND INSPECTION PROCEDURE

1. CONNECTOR CONNECTION AND TERMINAL INSPECTION

- For troubleshooting, diagnostic trouble code charts or problem symptom table are provided for each circuit with detailed inspection procedures on the following pages.
- When all the component parts, wire harnesses and connectors of each circuit except the ECU are found to be normal in troubleshooting, then it is determined that the problem is in the ECU. Accordingly, if diagnosis is performed without the problem symptoms occurring, refer to Step 8 to replace the ECU. So always confirm that the problem symptoms are occurring, or proceed with inspection while using the symptom simulation method.
- The instructions ”Check wire harness and connector” and ”Check and replace ECU” which appear in the inspection procedure, are common and applicable to all diagnostic trouble codes. Follow the procedure outlined below whenever these instructions appear.

OPEN CIRCUIT:

This could be due to a disconnected wire harness, faulty contact in the connector, and a connector terminal pulled out, etc.

HINT:

- It is rarely the case that a wire is broken in the middle of it. Most cases occur at the connector. In particular, carefully check the connectors of sensors and actuators
- Faulty contact could be due to rusting of the connector terminals, to foreign materials entering terminals or a deformation of connector terminals. Simply disconnecting and reconnecting the connectors once changes the condition of the connection and may result in a return to normal operation. Therefore, in troubleshooting, if no abnormality is found in the wire harness and connector check, but the problem disappears after the check, then the cause is considered to be in the wire harness or connectors.

SHORT CIRCUIT:

This could be due to a contact between wire harness and the body ground or to a short circuit occurred inside the switch, etc.

HINT:

When there is a short circuit between the wire harness and body ground, check thoroughly whether the wire harness is caught in the body or is clamped properly.

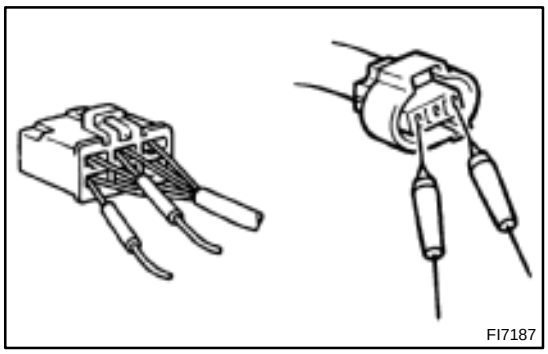
FI7187

2. CONNECTOR HANDLING

When inserting tester probes into a connector, insert them from the rear of the connector. When necessary, use mini test leads. For water resistant connectors which cannot be accessed from behind, take good care not to deform the connector terminals.

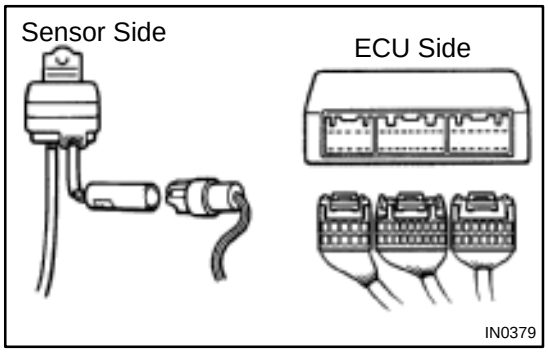

IN0379

3. CONTINUITY CHECK (OPEN CIRCUIT CHECK)

(a) Disconnect the connectors at both ECU and sensor sides.

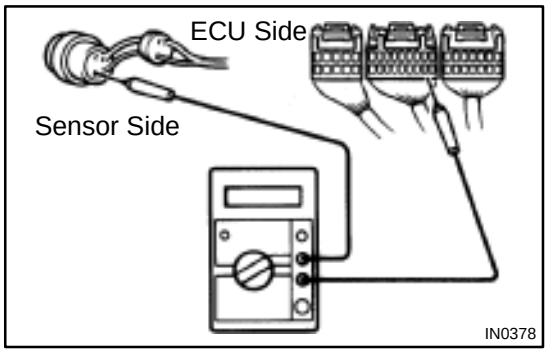

IN0378

(b) Measure the resistance between the applicable terminals of the connectors.

Resistance: 1 Ω or less

HINT:

Measure the resistance while lightly shaking the wire harness vertically and horizontally.

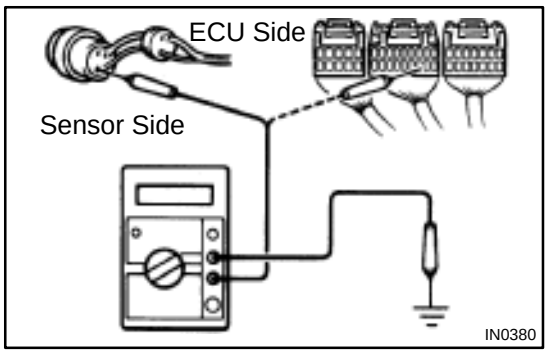

IN0380

4. RESISTANCE CHECK (SHORT CIRCUIT CHECK)

(a) Disconnect the connectors on both ends.

(b) Measure the resistance between the applicable terminals of the connectors and body ground. Be sure to carry out this check on the connectors on both ends.

Resistance: 1 MΩ or higher

HINT:

Measure the resistance while lightly shaking the wire harness vertically and horizontally.

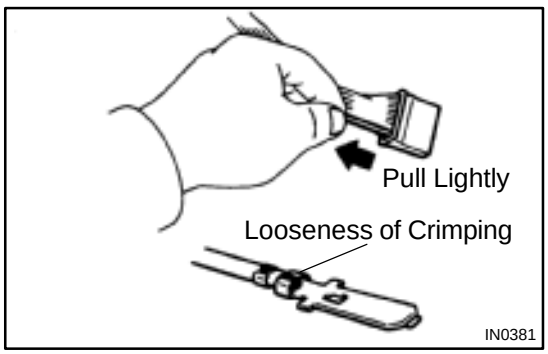

IN0381

5. VISUAL CHECK AND CONTACT PRESSURE CHECK

(a) Disconnect the connectors at both ends.

(b) Check for rust or foreign material, etc. in the terminals of the connectors.

(c) Check crimped portions for looseness or damage and check that the terminals are secured in lock portion.

HINT:

The terminals should not come out when pulled lightly from the back.

(d) Prepare a test male terminal and insert it in the female terminal, then pull it out.

NOTICE:

When testing a gold–plated female terminal, always use a gold–plated male terminal.

HINT:

When the test terminal is pulled out more easily than others, there may be poor contact in that section.

Fig. 1

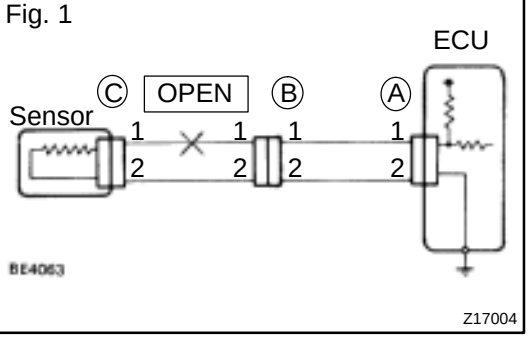

6. CHECK OPEN CIRCUIT

For the open circuit in the wire harness in Fig. 1, perform "(a) Continuity Check" or "(b) Voltage Check" to locate the section.

Fig. 2

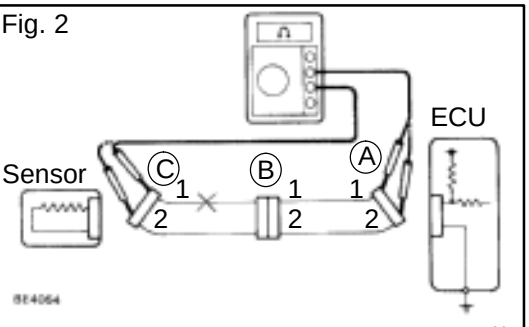

(a) Check the continuity.

(1) Disconnect connectors "A" and "C" and measure the resistance between them.

In the case of Fig. 2:

Between terminal 1 of connector "A" and terminal 1 of connector "C" → No continuity (open)

Between terminal 2 of connector "A" and terminal 2 of connector "C" → Continuity

Therefore, it is found out that there is an open circuit between terminal 1 of connector "A" and terminal 1 of connector "C".

Fig. 3

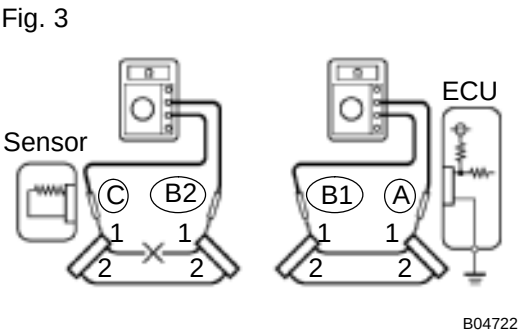

(2) Disconnect connector "B" and measure the resistance between the connectors.

In the case of Fig. 3:

Between terminal 1 of connector "A" and terminal 1 of connector "B1" → Continuity

Between terminal 1 of connector "B2" and terminal 1 of connector "C" → No continuity (open)

Therefore, it is found out that there is an open circuit between terminal 1 of connector "B2" and terminal 1 of connector "C".

Fig. 4

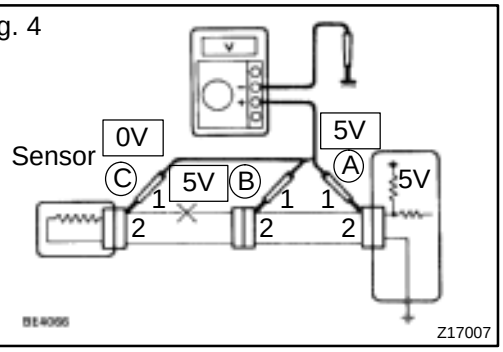

(b) Check the voltage.

In a circuit in which voltage is applied (to the ECU connector terminal), an open circuit can be checked for by conducting a voltage check.

As shown in Fig. 4, with each connector still connected, measure the voltage between body ground and terminal 1 of connector ”A” at the ECU 5V output terminal, terminal 1 of connector ”B”, and terminal 1 of connector ”C”, in that order.

If the results are:

5V: Between Terminal 1 of connector ”A” and Body Ground
5V: Between Terminal 1 of connector ”B” and Body Ground
0V: Between Terminal 1 of connector ”C” and Body Ground

Then it is found out that there is an open circuit in the wire harness between terminal 1 of ”B” and terminal 1 of ”C”.

Fig. 5

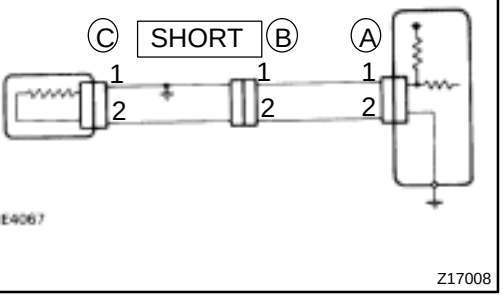

7. CHECK SHORT CIRCUIT

If the wire harness is ground shorted as in Fig. 5, locate the section by conducting a ”continuity check with ground”.

Fig. 6

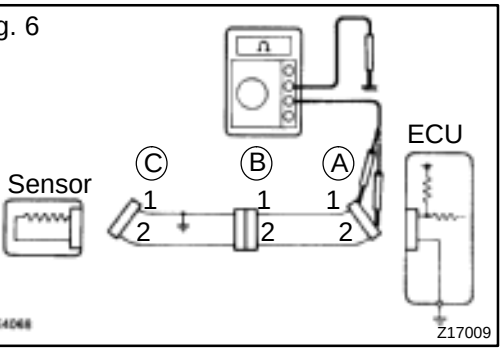

Check the continuity with ground.

(1) Disconnect connectors ”A” and ”C” and measure the resistance between terminal 1 and 2 of connector ”A” and body ground.

In the case of Fig. 6:

Between terminal 1 of connector ”A” and body ground → Continuity (short)

Between terminal 2 of connector ”A” and body ground → No continuity

Therefore, it is found out that there is a short circuit between terminal 1 of connector ”A” and terminal 1 of connector ”C”.

Fig. 7

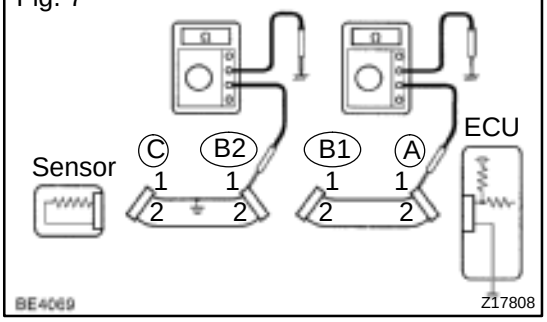

(2) Disconnect connector ”B” and measure the resistance between terminal 1 of connector ”A” and body ground, and terminal 1 of connector ”B2” and body ground.
In the case of Fig. 7:
Between terminal 1 of connector ”A” and body ground → No continuity
Between terminal 1 of connector ”B2” and body ground → Continuity (short)
Therefore, it is found out that there is a short circuit between terminal 1 of connector ”B2” and terminal 1 of connector ”C”.

8. CHECK AND REPLACE ECU

First check the ECU ground circuit. If it is faulty, repair it. If it is normal, the ECU could be faulty, so replace the ECU with a normal functioning one and check that the symptoms appear.

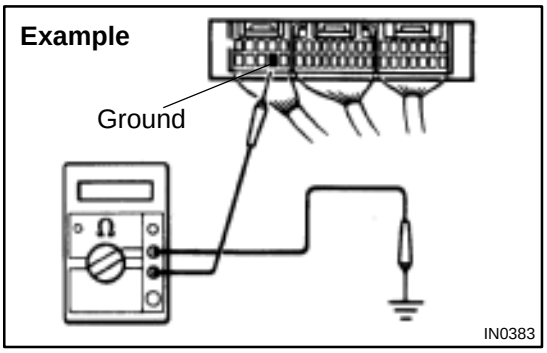

(1) Measure the resistance between the ECU ground terminal and the body ground.

Resistance: 1 Ω or less

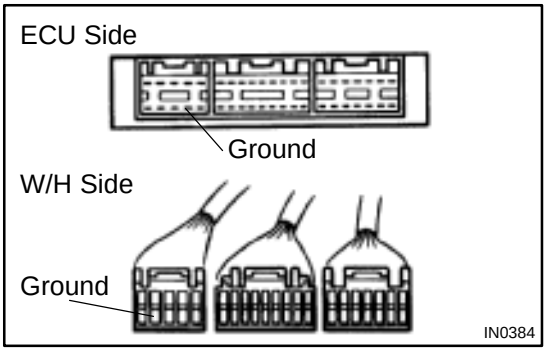

(2) Disconnect the ECU connector, check the ground terminals on the ECU side and the wire harness side for bend and check the contact pressure.

TERMS

IN04Q–11

ABBREVIATIONS USED IN THIS MANUAL

Abbreviations	Meaning
ABS	Anti–Lock Brake System
AC	Alternating Current
ACC	Accessory
ACIS	Acoustic Control Induction System
ACSD	Automatic Cold Start Device
A.D.D.	Automatic Disconnecting Differential
A/F	Air–Fuel Ratio
AHC	Active Height Control Suspension
ALR	Automatic Locking Retractor
ALT	Alternator
AMP	Amplifier
ANT	Antenna
APPROX.	Approximately
A/T	Automatic Transmission (Transaxle)
ATF	Automatic Transmission Fluid
AUTO	Automatic
AUX	Auxiliary
AVG	Average
AVS	Adaptive Variable Suspension
BA	Brake Assist
BACS	Boost Altitude Compensation System
BAT	Battery
BDC	Bottom Dead Center
B/L	Bi–Level
B/S	Bore–Stroke Ratio
BTDC	Before Top Dead Center
BVSV	Bimetallic Vacuum Switching Valve
Calif.	California
CB	Circuit Breaker
CCo	Catalytic Converter For Oxidation
CD	Compact Disc
CF	Cornering Force
CG	Center Of Gravity
CH	Channel
COMB.	Combination
CPE	Coupe
CPS	Combustion Pressure Sensor
CPU	Central Processing Unit
CRS	Child Restraint System
CTR	Center
C/V	Check Valve
CV	Control Valve

CW	Curb Weight
DC	Direct Current
DEF	Defogger
DFL	Deflector
DIFF.	Differential
DIFF. LOCK	Differential Lock
D/INJ	Direct Injection
DLI	Distributorless Ignition
DOHC	Double Over Head Cam
DP	Dash Pot
DS	Dead Soak
DSP	Digital Signal Processor
EBD	Electronic Brake Force Distribution
ECAM	Engine Control And Measurement System
ECD	Electronic Controlled Diesel
ECDY	Eddy Current Dynamometer
ECU	Electronic Control Unit
ED	Electro–Deposited Coating
EDIC	Electric Diesel Injection Control
EDU	Electronic Driving Unit
EFI	Electronic Fuel Injection
E/G	Engine
EGR–VM	Egr–Vacuum Modulator
ELR	Emergency Locking Retractor
EMPS	Electric Motor Power Steering
ENG	Engine
ESA	Electronic Spark Advance
ETCS	Electronic Throttle Control System
EVP	Evaporator
E–VRV	Electric Vacuum Regulating Valve
EXH	Exhaust
FE	Fuel Economy
FF	Front–Engine Front–Wheel–Drive
F/G	Fuel Gage
FIPG	Formed In Place Gasket
FL	Fusible Link
F/P	Fuel Pump
FPU	Fuel Pressure Up
Fr	Front
FR	Front–Engine Rear–Wheel–Drive
F/W	Flywheel
FW/D	Flywheel Damper
FWD	Front–Wheel–Drive
GAS	Gasoline
GND	Ground
HAC	High Altitude Compensator

H/B	Hatchback
H–FUSE	High Current Fuse
HI	High
HID	High Intensity Discharge (Head Lamp)
HSG	Housing
HT	Hard Top
HV	Hybrid Vehicle
HWS	Heated Windshield System
IAC	Idle Air Control
IC	Integrated circuit
IDI	Indirect Diesel Injection
IFS	Independent Front Suspension
IG	Ignition
IIA	Integrated Ignition Assembly
IN	Intake (Manifold, Valve)
INT	Intermittent
I/P	Instrument Panel
IRS	Independent Rear Suspension
J/B	Junction Block
J/C	Junction Connector
KD	Kick–Down
LAN	Local Area Network
LB	Liftback
LCD	Liquid Crystal Display
LED	Light Emitting Diode
LH	Left–Hand
LHD	Left–Hand Drive
L/H/W	Length, Height, Width
LLC	Long–Life Coolant
LNG	Liquified Natural Gas
LO	Low
LPG	Liquified Petroleum Gas
LSD	Limited Slip Differential
LSP & PV	Load Sensing Proportioning And Bypass Valve
LSPV	Load Sensing Proportioning Valve
MAX.	Maximum
MG1	Motor Generator No. 1
MG2	Motor Generator No. 2
MIC	Microphone
MIL	Malfunction Indicator Lamp
MIN.	Minimum
MP	Multipurpose
MPX	Multiplex Communication System
M/T	Manual Transmission
MT	Mount
MTG	Mounting

N	Neutral
NA	Natural Aspiration
No.	Number
O/D	Overdrive
OEM	Original Equipment Manufacturing
OHC	Overhead Camshaft
OHV	Overhead Valve
OPT	Option
O/S	Oversize
P & BV	Proportioning And Bypass Valve
PCS	Power Control System
PCV	Positive Crankcase Ventilation
PKB	Parking Brake
PPS	Progressive Power Steering
PS	Power Steering
PTO	Power Take–Off
R & P	Rack And Pinion
R/B	Relay Block
RBS	Recirculating Ball Type Steering
R/F	Reinforcement
RFS	Rigid Front Suspension
RH	Right–Hand
RHD	Right–Hand Drive
RLY	Relay
ROM	Read Only Memory
Rr	Rear
RR	Rear–Engine Rear–Wheel Drive
RRS	Rigid Rear Suspension
RWD	Rear–Wheel Drive
SDN	Sedan
SEN	Sensor
SICS	Starting Injection Control System
SOC	State Of Charge
SOHC	Single Overhead Camshaft
SPEC	Specification
SPI	Single Point Injection
SRS	Supplemental Restraint System
SSM	Special Service Materials
SST	Special Service Tools
STD	Standard
STJ	Cold–Start Fuel Injection
SW	Switch
SYS	System
T/A	Transaxle
TACH	Tachometer
TBI	Throttle Body Electronic Fuel Injection

TC	Turbocharger
TCCS	TOYOTA Computer–Controlled System
TCV	Timing Control Valve
TDC	Top Dead Center
TEMP.	Temperature
TEMS	TOYOTA Electronic Modulated Suspension
TIS	Total Information System For Vehicle Development
T/M	Transmission
TMC	TOYOTA Motor Corporation
TMMK	TOYOTA Motor Manufacturing Kentucky, Inc.
TRAC	Traction Control System
TURBO	Turbocharge
U/D	Underdrive
U/S	Undersize
VCV	Vacuum Control Valve
VENT	Ventilator
VIN	Vehicle Identification Number
VPS	Variable Power Steering
VSC	Vehicle Skid Control
VSV	Vacuum Switching Valve
VTV	Vacuum Transmitting Valve
w/	With
WGN	Wagon
W/H	Wire Harness
w/o	Without
1st	First
2nd	Second
2WD	Two Wheel Drive Vehicle (4x2)
4WD	Four Wheel Drive Vehicle (4x4)

IN0CI–02

GLOSSARY OF SAE AND TOYOTA TERMS

This glossary lists all SAE–J1930 terms and abbreviations used in this manual in compliance with SAE recommendations, as well as their TOYOTA equivalents.

SAE ABBREVIATIONS	SAE TERMS	TOYOTA TERMS ( )—ABBREVIATIONS
A/C	Air Conditioning	Air Conditioner
ACL	Air Cleaner	Air Cleaner, A/CL
AIR	Secondary Air Injection	Air Injection (AI)
AP	Accelerator Pedal	–
B+	Battery Positive Voltage	+B, Battery Voltage
BARO	Barometric Pressure	HAC
CAC	Charge Air Cooler	Intercooler
CARB	Carburetor	Carburetor
CFI	Continuous Fuel Injection	–
CKP	Crankshaft Position	Crank Angle
CL	Closed Loop	Closed Loop
CMP	Camshaft Position	Cam Angle
CPP	Clutch Pedal Position	–
CTOX	Continuous Trap Oxidizer	–
CTP	Closed Throttle Position	LL ON, Idle ON
DFI	Direct Fuel Injection (Diesel)	Direct Injection (DI)
DI	Distributor Ignition	–
DLC1 DLC2 DLC3	Data Link Connector 1 Data Link Connector 2 Data Link Connector 3	1: Check Connector 2: Total Diagnosis Comunication Link (TDCL) 3: OBD II Diagnostic Connector
DTC	Diagnostic Trouble Code	Diagnostic Code
DTM	Diagnostic Test Mode	–
ECL	Engine Control Level	–
ECM	Engine Control Module	Engine ECU (Electronic Control Unit)
ECT	Engine Coolant Temperature	Coolant Temperature, Water Temperature (THW)
EEPROM	Electrically Erasable Programmable Read Only Memory	Electrically Erasable Programmable Read Only Memory (EEPROM), Erasable Programmable Read Only Memory (EPROM)
EFE	Early Fuel Evaporation	Cold Mixture Heater (CMH), Heat Control Valve (HCV)
EGR	Exhaust Gas Recirculation	Exhaust Gas Recirculation (EGR)
EI	Electronic Ignition	TOYOTA Distributorless Ignition (TDI)
EM	Engine Modification	Engine Modification (EM)
EPROM	Erasable Programmable Read Only Memory	Programmable Read Only Memory (PROM)
EVAP	Evaporative Emission	Evaporative Emission Control (EVAP)
FC	Fan Control	–
FEEPROM	Flash Electrically Erasable Programmable Read Only Memory	–
FEPROM	Flash Erasable Programmable Read Only Memory	–
FF	Flexible Fuel	–
FP	Fuel Pump	Fuel Pump
GEN	Generator	Alternator
GND	Ground	Ground (GND)

HO2S	Heated Oxygen Sensor	Heated Oxygen Sensor (HO_2S)
IAC	Idle Air Control	Idle Speed Control (ISC)
IAT	Intake Air Temperature	Intake or Inlet Air Temperature
ICM	Ignition Control Module	–
IFI	Indirect Fuel Injection	Indirect Injection (IDL)
IFS	Inertia Fuel–Shutoff	–
ISC	Idle Speed Control	–
KS	Knock Sensor	Knock Sensor
MAF	Mass Air Flow	Air Flow Meter
MAP	Manifold Absolute Pressure	Manifold Pressure Intake Vacuum
MC	Mixture Control	Electric Bleed Air Control Valve (EBCV) Mixture Control Valve (MCV) Electric Air Control Valve (EACV)
MDP	Manifold Differential Pressure	–
MFI	Multiport Fuel Injection	Electronic Fuel Injection (EFI)
MIL	Malfunction Indicator Lamp	Check Engine Lamp
MST	Manifold Surface Temperature	–
MVZ	Manifold Vacuum Zone	–
NVRAM	Non–Volatile Random Access Memory	–
O2S	Oxygen Sensor	Oxygen Sensor, O_2 Sensor (O_2S)
OBD	On–Board Diagnostic	On–Board Diagnostic System (OBD)
OC	Oxidation Catalytic Converter	Oxidation Catalyst Convert (OC), CCo
OP	Open Loop	Open Loop
PAIR	Pulsed Secondary Air Injection	Air Suction (AS)
PCM	Powertrain Control Module	–
PNP	Park/Neutral Position	–
PROM	Programmable Read Only Memory	–
PSP	Power Steering Pressure	–
PTOX	Periodic Trap Oxidizer	Diesel Particulate Filter (DPF) Diesel Particulate Trap (DPT)
RAM	Random Access Memory	Random Access Memory (RAM)
RM	Relay Module	–
ROM	Read Only Memory	Read Only Memory (ROM)
RPM	Engine Speed	Engine Speed
SC	Supercharger	Supercharger
SCB	Supercharger Bypass	E–ABV
SFI	Sequential Multiport Fuel Injection	Electronic Fuel Injection (EFI), Sequential Injection
SPL	Smoke Puff Limiter	–
SRI	Service Reminder Indicator	–
SRT	System Readiness Test	–
ST	Scan Tool	–
TB	Throttle Body	Throttle Body
TBI	Throttle Body Fuel Injection	Single Point Injection Central Fuel Injection (Ci)
TC	Turbocharger	Turbocharger
TCC	Torque Converter Clutch	Torque Converter

TCM	Transmission Control Module	Transmission ECU, ECT ECU
TP	Throttle Position	Throttle Position
TR	Transmission Range	–
TVV	Thermal Vacuum Valve	Bimetallic Vacuum Switching Valve (BVSV) Thermostatic Vacuum Switching Valve (TVSV)
TWC	Three–Way Catalytic Converter	Three–Way Catalytic (TWC) Manifold Converter CC_{RO}
TWC+OC	Three–Way + Oxidation Catalytic Converter	CC_R + CCo
VAF	Volume Air Flow	Air Flow Meter
VR	Voltage Regulator	Voltage Regulator
VSS	Vehicle Speed Sensor	Vehicle Speed Sensor
WOT	Wide Open Throttle	Full Throttle
WU–OC	Warm Up Oxidation Catalytic Converter	–
WU–TWC	Warm Up Three–Way Catalytic Converter	–
3GR	Third Gear	–
4GR	Fourth Gear	–

OUTSIDE VEHICLE

MA02E–02

GENERAL MAINTENANCE

These are maintenance and inspection items which are considered to be the owner's responsibility. They can be done by the owner or they can have them done at a service shop.
These items include those which should be checked on a daily basis, those which, in most cases, do not require (special) tools and those which are considered to be reasonable for the owner to do.
Items and procedures for general maintenance are as follows.

1. GENERAL NOTES

- Maintenance items may vary from country to country. Check the owner's manual supplement in which the maintenance schedule is shown.
- Every service item in the periodic maintenance schedule must be performed.
- Periodic maintenance service must be performed according to whichever interval in the periodic maintenance schedule occurs first, the odometer reading (miles) or the time interval (months).
- Maintenance service after the last period should be performed at the same interval as before unless otherwise noted.
- Failure to do even one item an cause the engine to run poorly and increase exhaust emissions.

2. TIRES

(a) Check the pressure with a gauge. If necessary, adjust.
(b) Check for cuts, damage or excessive wear.

3. WHEEL NUTS

When checking the tires, check the nuts for looseness or for missing nuts. If necessary, tighten them.

4. TIRE ROTATION

Check the owner's manual supplement in which the maintenance schedule is shown.

5. WINDSHIELD WIPER BLADES

Check for wear or cracks whenever they do not wipe clean. If necessary, replace.

6. FLUID LEAKS

Check underneath for leaking fuel, oil, water or other fluid.

7. DOORS AND ENGINE HOOD

(a) Check that all doors including the trunk lid operate smoothly, and that all latches lock securely.
(b) Check that the engine hood secondary latch secures the hood from opening when the primary latch is released.

INSIDE VEHICLE

MA02F–02

GENERAL MAINTENANCE

These are maintenance and inspection items which are considered to be the owner's responsibility. They can be done by the owner or they can have them done at a service shop.
These items include those which should be checked on a daily basis, those which, in most cases, do not require (special) tools and those which are considered to be reasonable for the owner to do.
Items and procedures for general maintenance are as follows.

1. GENERAL NOTES

- Maintenance items may vary from country to country. Check the owner's manual supplement in which the maintenance schedule is shown.
- Every service item in the periodic maintenance schedule must be performed.
- Periodic maintenance service must be performed according to whichever interval in the periodic maintenance schedule occurs first, the odometer reading (miles) or the time interval (months).
- Maintenance service after the last period should be performed at the same interval as before unless otherwise noted.

2. LIGHTS

(a) Check that the headlights, stop lights, taillights, turn signal lights, and other lights are all working.
(b) Check the headlight aim.

3. WARNING LIGHTS AND BUZZERS

Check that all warning lights and buzzers function properly.

4. HORN

Check that it is working.

5. WINDSHIELD GLASS

Check for scratches, pits or abrasions.

6. WINDSHIELD WIPER AND WASHER

(a) Check operation of the wipers and washer.
(b) Check that the wipers do not streak.

7. WINDSHIELD DEFROSTER

Check that air comes out from the defroster outlet when operating the heater or air conditioner.

8. REAR VIEW MIRROR

Check that it is mounted securely.

9. SUN VISORS

Check that they move freely and are mounted securely.

10. STEERING WHEEL

Check that it has the specified freeplay. Be alert for changes in steering condition, such as hard steering, excessive freeplay or strange noises.

11. SEATS

(a) Check that the seat adjusters operate smoothly.
(b) Check that all latches lock securely in any position.
(c) Check that the head restraints move up and down smoothly and that the locks hold securely in any latch position.
(d) For fold–down seat backs, check that the latches lock securely.

12. SEAT BELTS

(a) Check that the seat belt system such as the buckles, retractors and anchors operate properly and smoothly.
(b) Check that the belt webbing is not cut, frayed, worn or damaged.

13. ACCELERATOR PEDAL

Check the pedal for smooth operation and uneven pedal effort or catching.

14. BRAKE PEDAL (See page BR–7)

(a) Check the pedal for smooth operation.

(b) Check that the pedal has the proper reserve distance and freeplay.

15. BRAKES

At a safe place, check that the brakes do not pull to one side when applied.

16. PARKING BRAKE (See page BR–9)

(a) Check that the pedal has the proper travel.

(b) On a safe incline, check that the vehicle is held securely with only the parking brake applied.

17. TRANSAXLE ”PARK” MECHANISM

(a) Check the lock release button of the selector lever for proper and smooth operation.

(b) On a safe incline, check that the vehicle is held securely with the selector lever in ”P” position and all brakes released.

UNDER HOOD

MA02G–02

GENERAL MAINTENANCE

1. GENERAL NOTES

- Maintenance items may vary from country to country. Check the owner's manual supplement in which the maintenance schedule is shown.
- Every serice item in the periodic maintenance schedule must be performed.
- Periodic maintenance service must be performed according to whichever interval in the periodic maintenance schedule occurs first, the odometer reading (miles) or the time interval (months).
- Maintenance service after the last period should be performed at the same interval as before unless otherwise noted.

2. WINDSHIELD WASHER FLUID

Check that there is sufficient fluid in the tank.

3. ENGINE COOLANT LEVEL

Check that the coolant level is between the "FULL" and "LOW" lines on the see–through reservoir.

4. RADIATOR AND HOSES

(a) Check that the front of the radiator is clean and not blocked with leaves, dirt or bugs.

(b) Check the hoses for cracks, kinks, rot or loose connections.

5. BRAKE FLUID LEVELS

Check that the brake fluid levels are near the upper level line on the see–through reservoirs.

6. CHECK TRANSAXLE OIL (FLUID)

- Visually check the transaxle for oil (fluid) leakage.
- If leakage is found, check for the cause and repair.

HINT:

Wait until the engine and motor cools down (approx. 30 min.) before checking the fluid level after extended driving at high speeds, in hot weather, in heavy traffic or pulling a trailer.

ENGINE

MA00R–17

INSPECTION

HINT:

Inspect these items when the engine is cold.

1. **INSPECT DRIVE BELT**
   (See page CO–4)
2. **REPLACE SPARK PLUGS**
   (See page IG–1)



3. **INSPECT AIR FILTER**

(a) Visually check that the air filter is not excessively dirty or oily.

HINT:

Oiliness may indicate a stuck PCV valve.

If necessary, replace the air cleaner element.

(b) Clean the air filter with compressed air.
First blow from the inside thoroughly, then blow off the outside of the element.

4. **REPLACE AIR FILTER**

Replace the air filter with a new one.

5. **REPLACE ENGINE OIL AND OIL FILTER**
   (See page LU–3)
6. **REPLACE ENGINE COOLANT**
   (See page CO–2)
7. **INSPECT CHARCOAL CANISTER**
   (Se page EC–7)
8. **REPLACE GASKET IN FUEL TANK CAP**
   (See page SF–19)
9. **INSPECT FUEL LINES AND CONNECTIONS**
   (See page SF–19)
10. **INSPECT EXHAUST PIPES AND MOUNTINGS**
    (See page EC–13)
11. **ADJUST VALVE CLEARANCE**
    (See page EM–5)

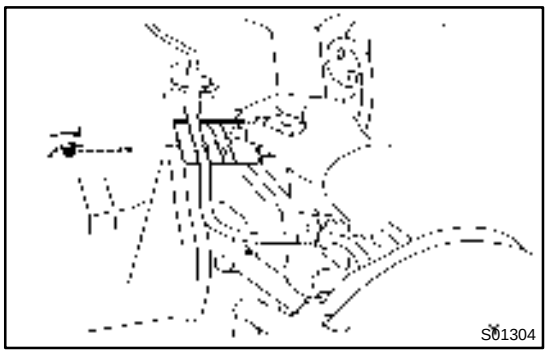

BRAKE

MA02H–03

INSPECTION

1. INSPECT BRAKE LINE PIPES AND HOSES

HINT:

Check in a well lighted area. Check the entire circumference and length of the brake hoses using a mirror as required. Turn the front wheels fully right or left before checking the front brake.

(a) Check all brake lines and hoses for:
- Damage
- Wear
- Deformation
- Cracks
- Corrosion
- Leaks
- Bends
- Twists

(b) Check all clamps for tightness and connections for leakage.

(c) Check that the hoses and lines are clear of sharp edges, moving parts and the exhaust system.

(d) Check that the lines installed in grommets pass through the center of the grommets.

2. INSPECT FRONT BRAKE PADS AND DISCS

(See page BR–29)

HINT:

If a squealing or scraping noise comes from the brake during, check the pad wear indicator to see if it is contacting the disc rotor. If so, the disc pad should be replaced.

3. INSPECT BRAKE LININGS AND DRUMS

(See page BR–35)

CHASSIS

MA048–01

INSPECTION

1. INSPECT STEERING LINKAGE

(a) Check the steering wheel freeplay. (See page SR–3)

(b) Check the steering linkage for looseness or damage.

Check that:

- Tie rod ends do not have excessive play.
- Dust seals and boots are not damaged.
- Boot clamps are not loose.

2. INSPECT SRS AIRBAG (See page RS–2)

3. INSPECT STEERING GEAR HOUSING OIL

Check the steering gear housing for oil leakage.

4. INSPECT DRIVE SHAFT BOOTS

Check the drive shaft boots for clamp looseness, leakage or damage.

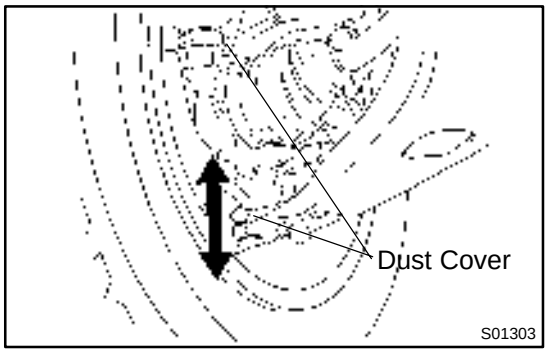

5. INSPECT BALL JOINTS AND DUST COVERS

(a) Inspect the ball joints for excessive looseness.

- Jack up the front of the vehicle and place wooden blocks with a height of 180 – 200 mm (7.09 – 7.87 in.) under the front tires.
- Lower the jack until there is about half a load on the front coil spring. Place stands under the vehicle for safety.
- Check that the front wheels are pointing straight ahead, and block them with chocks.
- Using a lever, pry up the end of the lower arm, and check the amount of play.

Maximum ball joint vertical play: 0 mm (0 in.)

If there is play, replace the ball joint.

(b) Check the dust cover for damage.

6. CHECK TRANSAXLE OIL (FLUID)

Visually check the transaxle for oil (fluid) leakage.

If leakage is found, check for the cause and repair.

7. REPLACE TRANSAXLE OIL (FLUID)

Replace the transaxle oil (See page HT–26).

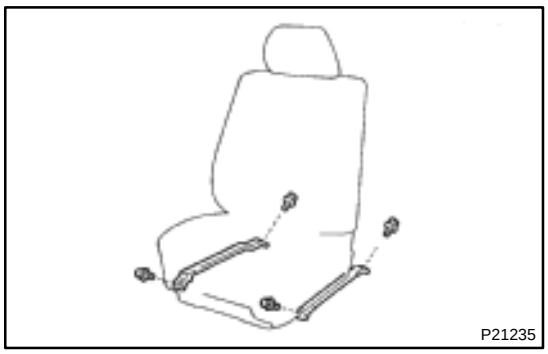

BODY

INSPECTION

MA049–01

1. TIGHTEN BOLTS AND NUTS ON CHASSIS AND BODY

Tighten these parts:

- Front seat mount bolts

Torque: 37 N·m (375 kgf·cm, 27 ft·lbf)

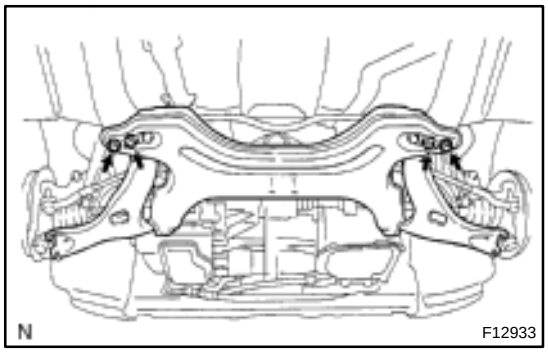

- Front suspension member–to–body mounting bolts

Torque:
Bolt A: 113 N·m (1,150 kgf·cm, 83 ft·lbf)
Bolt B: 157 N·m (1,600 kgf·cm, 116 ft·lbf)

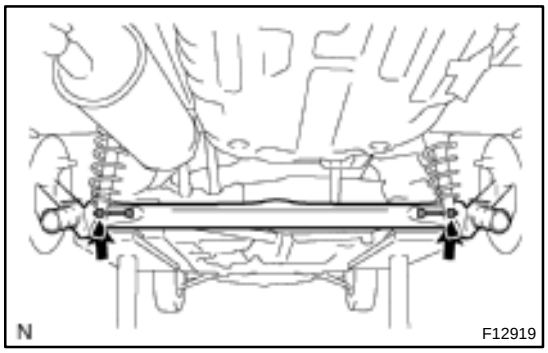

- Rear suspension member–to–body mounting nuts

Torque: 90 N·m (918 kgf·cm, 66 ft·lbf)

2. FINAL INSPECTION

(a) Check the operation of the body parts:

- Hood:
  Auxiliary catch operate properly
  Hood locks securely when closed
- Front and rear doors:
  Door lock operates properly
  Doors close properly
- Luggage compartment door:
  Door lock operates properly
- Seats:
  Seat adjusts easily and locks securely in any position
  Front seat back locks securely in any position
  Folding–down rear seat backs lock securely

(b) Road test:

- Check the engine and chassis for abnormal noises.
- Check that the vehicle does not wander or pull to one side.
- Check that the brake work properly and do not drag.

(c) Be sure to deliver a clean car. especially check:

- Steering wheel
- Shift lever knob
- All switch knobs
- Door handles
- Seats

MAINTENANCE

EQUIPMENT

PP0E6–02

Mirror	Brake hose
Torque wrench	

ENGINE MECHANICAL

SST (Special Service Tools)

PP3AW–01

	09032–00100	Oil Pan Seal Cutter	
	09201–01055	Valve Guide Bushing Remover & Replacer 5.5	
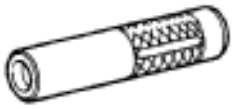	09201–41020	Valve Stem Oil Seal Replacer	
	09202–70020	Valve Spring Compressor	
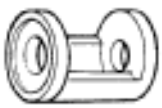	(09202–00010)	Attachment	
	09213–70010	Crankshaft Pulley Holding Tool	
	09221–25026	Piston Pin Remover & Replacer	
	(09221–00021)	Body	
	(09221–00030)	Spring	
	(09221–00141)	Guide H	
	(09221–00150)	Bushing ”D”	
	(09221–00190)	Guide ”K”	

	09222–30010	Connecting Rod Bushing Remover & Replacer	
	09223–15030	Oil Seal & Bearing Replacer	
	09330–00021	Companion Flange Holding Tool	
	09612–22011	Tilt Handle Bearing Replacer	
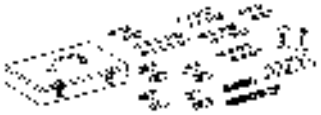	09950–50012	Puller C Set	
	(09951–05010)	Hanger 150	
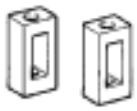	(09952–05010)	Slide Arm	
	(09953–05020)	Center Bolt 150	
	(09954–05020)	Claw No.2	
	09950–70010	Handle Set	
	(09951–07100)	Handle 100	
	09301–00110	Clutch Guide Tool	

PP2FB–02

RECOMMENDED TOOLS

	09090–04020	Engine Sling Device	
	09200–00010	Engine Adjust Kit .	
	09258–00030	Hose Plug Set .	

PP2FC–02

EQUIPMENT

Abrasive compound	Valve
Caliper gauge	
CO/HC meter	
Compression gauge	
Connecting rod aligner	
Cylinder gauge	
Dial indicator	
Dye penetrant	
Engine tune–up tester	
Groove cleaning tool	Piston ring groove
Heater	
Magnetic finger	
Micrometer	
Pin hole grinder	Piston pin hole of piston
Piston ring compressor	
Piston ring expander	
Plastigage	
Precision straight edge	
Press	
Ridge reamer	Cylinder
Soft brush	
Solvent	
Spring tester	Valve spring
Steel square	Valve spring
Thermometer	
Torque wrench	
Torx wrench socket set	Stud bolt
TOYOTA hand held tester or OBDII scan tool	
Valve seat cutter	
V–block	
Vernier calipers	
Wire brush	Valve

PP2FD–02

SSM (Special Service Materials)

08826–00080	Seal Packing Black or equivalent (FIPG)	
08826–00100	Seal Packing 1282B, THREE BOND 1282B or equivalent (FIPG)	
08833–00070	Adhesive 1324, THREE BOND 1324 or equivalent	

EMISSION CONTROL

EQUIPMENT

PP2FE–03

Torque wrench	
Vacuum gauge	
Pressure gauge	
Hose clipper	
MITYVAC (Hand–held vacuum pump)	
TOYOTA hand held tester or OBDII scan tool	

SFI

SST (Special Service Tools)

PP3AX–02

	09268–21010	Fuel Hose Puller	
	09268–41047	Injection Measuring Tool Set	
	(95336–08070)	Hose	
	09268–45014	EFI Fuel Pressure Gauge	
	(09268–41200)	Gauge	
	(09268–41220)	Hose	
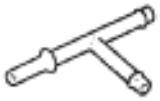	(09268–41250)	T Joint	
	09816–30010	Oil Pressure Switch Socket	
	09842–30080	EFI Inspection Wire ”H”	
	09843–18020	Diagnosis Check Wire	

PP2FQ–02

RECOMMENDED TOOLS

	09082–00040	TOYOTA Electrical Tester.	
	09200–00010	Engine Adjust Kit .	
	09258–00030	Hose Plug Set .	Plug for the vacumm hose, fuel hose etc.

PP1WF–02

EQUIPMENT

Carburetor cleaner	Throttle body
Graduated cylinder	Injector
TOYOTA hand held tester or OBD II scan tool	
Soft brush	Throttle body
Sound scope	Injector
Torque wrench	
Vacuum gauge	

COOLING

PP3AY–01

SST (Special Service Tools)

	09960–10010 Variable Pin Wrench Set	
	(09962–01000) Variable Pin Wrench Arm Assy	
 	(09963–00600) Pin 6	

PP2FG–02

RECOMMENDED TOOLS

	09082–00040 TOYOTA Electrical Tester.	

PP2FH–02

EQUIPMENT

Belt tension gauge	
Heater	Thermostat
Radiator cap tester	
Thermometer	Thermostat
Torque wrench	
Vernier calipers	

PP2FI–03

COOLANT

Item	Capacity	Classification
Engine coolant	4.9 liters (5.2 US qts, 4.3 lmp. qts)	Ethylene–glycol base

LUBRICATION

PP3AZ–01

SST (Special Service Tools)

	09228–06501 Oil Filter Wrench	

PP2FK–01

EQUIPMENT

Oil pressure gauge	
Torque wrench	
Feeler gauge	
Straight edge	

PP2FL–03

LUBRICANT

Item		Capacity	Classification
Engine oil			API grade SJ, Energy–Conserving or ILSAC multigrade engine oil. SAE 5W–30 is the best choice for your vehicle, for good fuel economy,and good starting in cold weather.
Drain and refill	w/ Oil filter change	3.7 liters (3.9 US qts, 3.3 lmp.qts)	
	w/o Oil filter change	3.4 liters (3.6 US qts, 3.0 lmp.qts)	
Dry fill		4.1 liters (4.3 US qts, 3.6 lmp.qts)	

PP2FM–02

SSM (Special Service Materials)

08833–00080	Adhesive 1344 THREE BOND 1344 LOCTITE 242 or equivalent	Oil pressure switch

IGNITION

RECOMMENDED TOOLS

PP2FN–02

	09082–00040	TOYOTA Electrical Tester.	
	09200–00010	Engine Adjust Kit .	

PP2FO–01

EQUIPMENT

Spark plug cleaner	

HYBRID VEHICLE CONTROL

RECOMMENDED TOOLS

PP3AS–01

	09082–00040 TOYOTA Electrical Tester.	

PP3AT–01

EQUIPMENT

Insulated gloves	
Insulated tools	
Vinyl tape	
Megger (500V)	
Megger (1000V)	

HYBRID TRANSAXLE

PP3AM–01

SST (Special Service Tools)

	09308–00010	Oil Seal Puller	
	09350–32014	TOYOTA Automatic Transmission Tool Set	
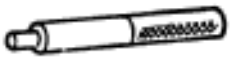	(09351–32130)	Handle	
	(09351–32150)	Oil Seal Replacer	
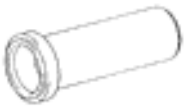	09388–40010	Input Oil Seal Replacer	
	09527–10011	Rear Axle Shaft Bearing Remover	
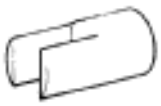	09564–32011	Differential Preload Adaptor	
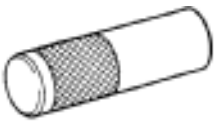	09608–06041	Front Hub Inner Bearing Cone Replacer	
	09612–30012	Steering Worm Bearing Puller	
	09710–20011	Front Suspension Bushing Tool Set	
	(09710–06071)	Replacer	
	09710–22021	Front Suspension Bushing Tool Set	

	(09710–01031) Upper Arm Bushing Replacer	
	09950–00020 Bearing Remover	
	09950–40011 Puller B Set	
	(09951–04010) Hanger 150	
	(09952–04010) Slide Arm	
	(09953–04020) Center Bolt 150	
	(09954–04010) Arm 25	
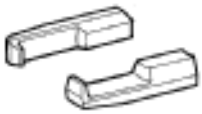	(09955–04061) Claw No.6	
	(09958–04011) Holder	
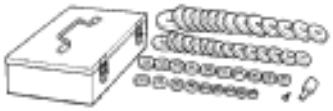	09950–60010 Replacer Set	
	(09951–00230) Replacer 23	
	(09951–00330) Replacer 33	
	(09951–00370) Replacer 37	

	(09951–00460)	Replacer 46	
	09950–60020	Replacer Set No.2	
	(09951–00680)	Replacer 68	
	09950–70010	Handle Set	
	(09951–07100)	Handle 100	
	09992–00095	Automatic Transmission Oil Pressure Gauge Set	
	(09992–00112)	Adaptor A	
	(09992–00271)	Gauge Assy	

PP3AN–01

RECOMMENDED TOOLS

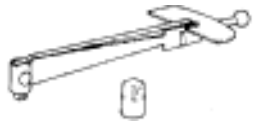	09025–00010	Torque Wrench (30 kgf–cm)	
	09031–00030	Pin Punch .	
	09040–00011	Hexagon Wrench Set .	
	09082–00040	TOYOTA Electrical Tester.	
	09090–04020	Engine Sling Device	

PP3AO–01

EQUIPMENT

Dial indicator	
Pin punch	
Straight edge	
Torque wrench	

PP3AP–01

LUBRICANT

Item	Capacity	Classification
Hybrid transaxle oil	4.6 liters (4.9 US qts, 4.0 lmp. qts)	ATF Type T–IV

PP3AQ–01

SSM (Special Service Materials)

08826–00080	Seal Packing Black or equivalent (FIPG)	
08826–00090	Seal Packing 1281, THREE BOND 1281 or equivalent (FIPG)	
08833–00070	Adhesive 1324, THREE BOND 1324 or equivalent	
08833–00080	Adhesive 1344 THREE BOND 1344 LOCTITE 242 or equivalent	

SUSPENSION AND AXLE

PP3A9–01

SST (Special Service Tools)

	09214–76011	Crankshaft Pulley Replacer	Rear axle
	09240–00020	Wire Gauge Set	Front drive shaft
	09520–00031	Rear Axle Shaft Puller	
	(09520–00040)	Shocker	Front axle Rear axle
	(09521–00010)	Attachment	Front axle
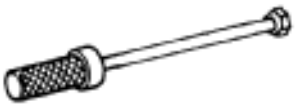	(09521–00020)	Rod with Grip	Front axle Rear axle
	09520–01010	Drive Shaft Remover Attachment	Front drive shaft
	09520–24010	Differential Side Gear Shaft Puller	Front drive shaft
	(09520–32040)	Shocker Set	
	09521–24010	Drive Shaft Boot Clamping Tool	Front drive shaft
	09527–17011	Rear Axle Shaft Bearing Remover	Front axle
	09608–16042	Front Hub Bearing Adjusting Tool	Front drive shaft

	(09608–02021)	Bolt & Nut	
	(09608–02041)	Retainer	
	09608–32010	Steering Knuckle Oil Seal Replacer	Front axle
	09628–10011	Ball Joint Puller	Front axle Rear axle
	09628–62011	Ball Joint Puller	Front axle Front drive shaft Front suspension
	09710–40010	Toe Control Link Replacer Arm	Rear suspension
	(09711–40010)	Toe Control Link Replacer Arm No.1	
	(09712–40010)	Toe Control Link Replacer Arm No.2	
	09727–30021	Coil Spring Compressor	Front suspension Rear suspension
	(09727–00010)	Bolt Set	
	(09727–00021)	Arm Set	
	(09727–00031)	Compressor	
	09729–22031	Front Spring Upper Seat Holder	Front suspension

	09751–36011	Brake Line Union Nut 10 x 12 mm Wrench	Rear suspension
	09930–00010	Drive Shaft Nut Chisel	Front axle Front drive shaft
	09950–00020	Bearing Remover	Front drive shaft Rear axle
	09950–40011	Puller B Set	Front axle
	(09951–04020)	Hanger 200	
	(09952–04010)	Slide Arm	
	(09953–04020)	Center Bolt 150	
	(09954–04010)	Arm 25	
	(09955–04011)	Claw No.1	
	(09957–04010)	Attachment	
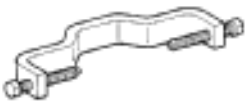	(09958–04011)	Holder	
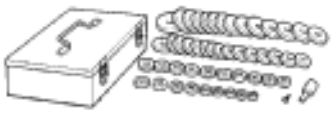	09950–60010	Replacer Set	Front axle
	(09951–00370)	Replacer 37	

	(09951–00550)	Replacer 55	
	(09951–00650)	Replacer 65	
	09950–60020	Replacer Set No.2	Front axle
	(09951–00730)	Replacer 73	
	09950–70010	Handle Set	Front axle
	(09951–07150)	Handle 150	

PP3A0–01

RECOMMENDED TOOLS

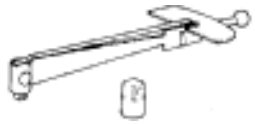	09025–00010	Torque Wrench (30 kgf–cm)	
	09042–00010	Torx Socket T30 .	
	09905–00012	Snap Ring No.1 Expander .	
	09905–00013	Snap Ring Pliers .	

PP0AM–01

EQUIPMENT

Dial indicator with magnetic base	
Drill	
Torque wrench	

PP26B–05

LUBRICANT

Item	Capacity	Application
Front drive shaft		
Inboard joint grease		
Color=Yellow ocher	180 – 190 g (6.3 – 6.7 oz.)	
Outboard joint grease		
Color=Yellow ocher	110 – 120 g (3.9 – 4.2 oz.)	

BRAKE

SST (Special Service Tools)

PP3BD–01

	09023–00100	Union Nut Wrench 10 mm	
	09214–76011	Crankshaft Pulley Replacer	
	09318–12010	Transfer Bearing Adjusting Nut Wrench	
	09520–00031	Rear Axle Shaft Puller	
	(09520–00040)	Shocker	
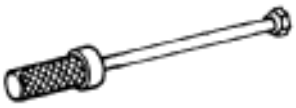	(09521–00020)	Rod with Grip	
	09950–00020	Bearing Remover	
	09703–30010	Brake Shoe Return Spring Tool	
	09709–29018	LSPV Gauge Set	
	09718–00010	Shoe Hold Down Spring Driver	
	09751–36011	Brake Line Union Nut 10 x 12 mm Wrench	
	09843–18040	Diagnosis Check Wire No.2	

	09630–00014	Power Steering Gear Housing Overhaul Tool Set	
	(09631–00142)	Overhaul Stand	
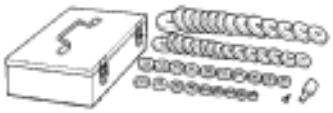	09950–60010	Replacer Set	
	(09951–00180)	Replacer 18	
	(09951–00190)	Replacer 19	

PP16D–04

RECOMMENDED TOOLS

	09082–00040	TOYOTA Electrical Tester.	
	09905–00013	Snap Ring Pliers .	Master cylinder

PP16E–04

EQUIPMENT

Torque wrench	
Micrometer	Brake disc
Dial indicator	Brake disc
Vernier calipers	Brake disc
Brake drum gauge	
Effort gauge	

PP16F–02

LUBRICANT

Item	Capacity	Classification
Brake fluid	–	SAE J1703 or FMVSS No. 116 DOT 3

STEERING

PP3BA–01

SST (Special Service Tools)

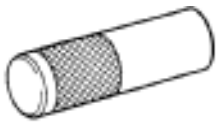	09608–06041	Front Hub Inner Bearing Cone Replacer	Tilt steering column
	09612–00012	Rack & Pinion Steering Rack Housing Stand	Electric motor power steering
	09922–10010	Variable Open Wrench	Electric motor power steering
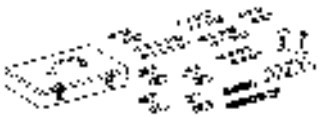	09950–50012	Puller C Set	Tilt steering column
	(09951–05010)	Hanger 150	
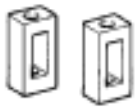	(09952–05010)	Slide Arm	
	(09953–05020)	Center Bolt 150	
	(09954–05020)	Claw No.2	

PP3BB–01

RECOMMENDED TOOLS

	09042–00010	Torx Socket T30 .	Tilt steering column
	09904–00010	Expander Set .	
	(09904–00050)	No. 4 Claw	
	09905–00012	Snap Ring No.1 Expander .	
	09905–00013	Snap Ring Pliers .	

PP0J9–10

EQUIPMENT

Torque wrench	

SUPPLEMENTAL RESTRAINT SYSTEM

PP0SY–02

SST (Special Service Tools)

	09082–00700	SRS Airbag Deployment Tool	
	09082–00750	Airbag Deployment Wire Sub–harness No.3	for Side Airbag Assembly
	09082–00760	Airbag Deployment Wire Sub–harness No.4	for Driver's and Front Passenger Airbag Assembly
	09843–18040	Diagnosis Check Wire No.2	

PP2I6–01

RECOMMENDED TOOLS

	09082–00040 TOYOTA Electrical Tester.	

PP0T0–01

EQUIPMENT

Torque wrench	
Bolt: Length: 35 mm (1.38 in.) Pitch: 1.0 mm (0.039 in.) Diam: 6.0 mm (0.236 in.)	Airbag disposal
Tire Width: 185 mm (7.28 in.) Inner diam: 360 mm (14.17 in.)	Airbag disposal
Tire with disc wheel Width: 185 mm (7.28 in.) Inner diam: 360 mm (14.17 in.)	Airbag disposal
Vinyl bag	Airbag disposal

BODY ELECTRICAL

PP26C–02

SST (Special Service Tools)

	09843–18040 Diagnosis Check Wire No.2	

PP26D–02

RECOMMENDED TOOLS

	09082–00040	TOYOTA Electrical Tester.	
	09041–00030	Torx Driver T30 .	Steering wheel pad
	09042–00010	Torx Socket T30 .	Steering wheel pad

PP26E–02

EQUIPMENT

Voltmeter	
Ammeter	
Ohmmeter	
Test lead	
Syphon	Brake fluid level warning switch
Bulb (3.4W)	Fuel sender gauge, Fuel level warning switch
Dry cell battery	Wireless door lock transmitter
Torque wrench	
Masking tape	Rear window defogger wire
Tin foil	Rear window defogger wire

PP26F–03

SSM (Special Service Materials)

	08888–88888	DuPont Paste No. 4817 or equivalent	Rear window defogger

BODY

PP3B4–01

SST (Special Service Tools)

	09812–00010	Door Hinge Set Bolt Wrench	
	09804–24010	Luggage Compartment Door Torsion Bar Tool	
	09082–00700	SRS Airbag Deployment Tool	
	09082–00730	Airbag Deployment Wire Sub–Harness No.1	
	09082–00740	Airbag Deployment Wire Sub–harness No.2	

PP3B0–01

RECOMMENDED TOOLS

	09050–20010	Air Riveter.	
	(09050–02010)	Dust Cap.	
	(09050–02020)	Nose Piece No.1.	
	09050–00032	Air Drill	
	(09050–00210)	Chuck Set	
	(09050–00220)	Handle	
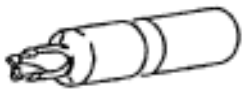	09060–60350	Revet Cutter.	
	09070–20010	Moulding Remover .	

PP3B1–01

EQUIPMENT

Clip remover	
Torque wrench	
Hexagon wrench (6 mm)	
Torx driver	
Hog ring pliers	
Hand riveter	
Tape	To avoid surface damage
Adhesive tape	To avoid surface damage
Double–stick tape	
Adhesive	
Cleaner	
Shop rag	
Knife	
Sealer gun	
Brush	
Putty spatula	
Glass plate or similar object	
Wooden block or similar object	
Heat light	
Piano wire	
Rope (no projections, difficult to break)	Seat belt pretensioner
Tire with disk wheel Width: 185 mm (7.28 in.) Inner diam: 360 mm (14.17 in.)	Seat belt pretensioner
Vinyl bag	Seat belt pretensioner

PP3B2–01

LUBRICANT

Item	Capacity	classification
MP grease	–	–

PP3B3–01

SSM (Special Service Materials)

08833–00070	Adhesive 1324, THREE BOND 1324 or equivalent	
08833–00070	Adhesive 1324, THREE BOND 1324 or equivalent	
08850–00801	Windshield Glass Adhesive Set or equivalent	

AIR CONDITIONING

PP3AD–01

SST (Special Service Tools)

	07110–58060	Air Conditioner Service Tool Set	
	(07117–78050)	Refrigerant Charging Gauge	
	(07117–88060)	Refrigerant Charging Hose	Discharge (Red)
	(07117–88070)	Refrigerant Charging Hose	Suction (Blue)
	(07117–88080)	Refrigerant Charging Hose	Utility (Green)
	(07117–58060)	Refrigerant Drain Service Valve	
	(07117–58080)	Quick Disconnect Adapter	Discharge (diam. 16 mm)
	(07117–58090)	Quick Disconnect Adapter	Suction (diam. 13 mm)
	(07117–58070)	T–Joint	
	07116–38360	Gas Leak Detector Assembly	
	07112–76050	Magnetic Clutch Stopper	
	07112–66040	Magnetic Clutch Remover	

	09870–00015	A/C Quick Joint Puller No.1	Suction tube
	09870–00025	A/C Quick Joint Puller No.2	Liquid tube

PP3AE–01

RECOMMENDED TOOLS

	09040–00011	Hexagon Wrench Set .	
	(09043–20050)	Socket Hexagon Wrench 5.	Expansion valve 5.0 mm (0.20 in.)
	(09043–20100)	Socket Hexagon Wrench 10.	Radiator & condenser module 10 mm (0.39 in.)
	09082–00040	TOYOTA Electrical Tester.	
	09216–00021	Belt Tension Gauge .	
	09905–00013	Snap Ring Pliers .	

PP3AF–02

EQUIPMENT

Voltmeter	
Ammeter	
Ohmmeter	
Test lead	
Thermometer	Sensor, ECT switch
Torque wrench	
Dial indicator	Magnetic clutch
Plastic hammer	Magnetic clutch

PP3AG–01

LUBRICANT

Item	Capacity	Classification
Compressor oil	–	ND–OIL 8 or equivalent
When replacing condenser	40 cc (1.4 fl.oz.)	
When replacing evaporator	40 cc (1.4 fl.oz.)	
When replacing compressor	120 cc (4.1 fl.oz.)	

STANDARD BOLT

HOW TO DETERMINE BOLT STRENGTH

SS0ZS–01

Bolt Type				Class
Hexagon Head Bolt		Stud Bolt	Weld Bolt	
Normal Recess Bolt	Deep Recess Bolt			
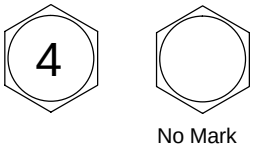 No Mark	 No Mark	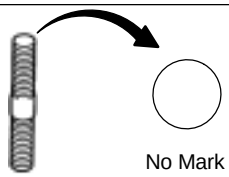 No Mark		4T
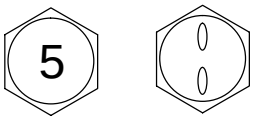	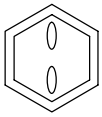			5T
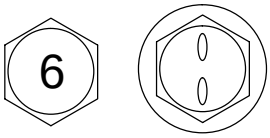 w/ Washer	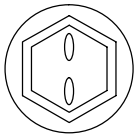 w/ Washer			6T
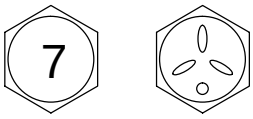	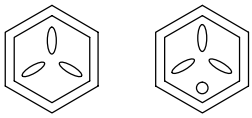			7T
				8T
				9T
	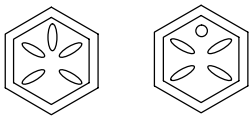			10T
	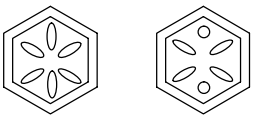			11T

B06431

SS0ZT–01

SPECIFIED TORQUE FOR STANDARD BOLTS

Class	Diameter mm	Pitch mm	Specified torque					
			Hexagon head bolt			Hexagon flange bolt		
			N·m	kgf·cm	ft·lbf	N·m	kgf·cm	ft·lbf
4T	6	1	5	55	48 in.·lbf	6	60	52 in.·lbf
	8	1.25	12.5	130	9	14	145	10
	10	1.25	26	260	19	29	290	21
	12	1.25	47	480	35	53	540	39
	14	1.5	74	760	55	84	850	61
	16	1.5	115	1,150	83	–	–	–
5T	6	1	6.5	65	56 in.·lbf	7.5	75	65 in.·lbf
	8	1.25	15.5	160	12	17.5	175	13
	10	1.25	32	330	24	36	360	26
	12	1.25	59	600	43	65	670	48
	14	1.5	91	930	67	100	1,050	76
	16	1.5	140	1,400	101	–	–	–
6T	6	1	8	80	69 in.·lbf	9	90	78 in.·lbf
	8	1.25	19	195	14	21	210	15
	10	1.25	39	400	29	44	440	32
	12	1.25	71	730	53	80	810	59
	14	1.5	110	1,100	80	125	1,250	90
	16	1.5	170	1,750	127	–	–	–
7T	6	1	10.5	110	8	12	120	9
	8	1.25	25	260	19	28	290	21
	10	1.25	52	530	38	58	590	43
	12	1.25	95	970	70	105	1,050	76
	14	1.5	145	1,500	108	165	1,700	123
	16	1.5	230	2,300	166	–	–	–
8T	8	1.25	29	300	22	33	330	24
	10	1.25	61	620	45	68	690	50
	12	1.25	110	1,100	80	120	1,250	90
9T	8	1.25	34	340	25	37	380	27
	10	1.25	70	710	51	78	790	57
	12	1.25	125	1,300	94	140	1,450	105
10T	8	1.25	38	390	28	42	430	31
	10	1.25	78	800	58	88	890	64
	12	1.25	140	1,450	105	155	1,600	116
11T	8	1.25	42	430	31	47	480	35
	10	1.25	87	890	64	97	990	72
	12	1.25	155	1,600	116	175	1,800	130

SS0ZU–01

HOW TO DETERMINE NUT STRENGTH

Nut Type			Class
Present Standard Hexagon Nut	Old Standard Hexagon Nut		
	Cold Forging Nut	Cutting Processed Nut	
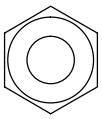 No Mark			4N
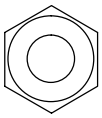 No Mark (w/ Washer)	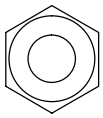 No Mark (w/ Washer)	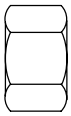 No Mark	5N (4T)
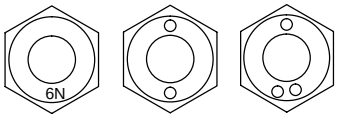 6N			6N
	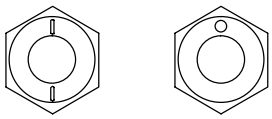	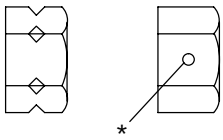 *	7N (5T)
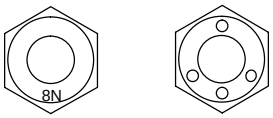 8N			8N
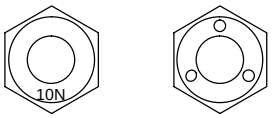 10N	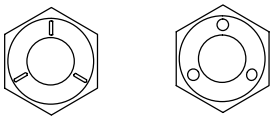	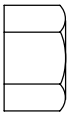 No Mark	10N (7T)
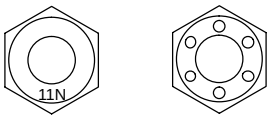 11N			11N
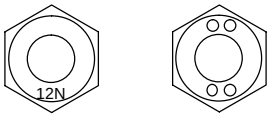 12N			12N

*: Nut with 1 or more marks on one side surface of the nut.

B06432

HINT:

Use the nut with the same number of the nut strength classification or the greater than the bolt strength classification number when tightening parts with a bolt and nut.

Example: Bolt = 4T

Nut = 4N or more

MAINTENANCE

SS0MG–01

SERVICE DATA

Front axle and suspension		
Ball joint vertical play	Maximum	0 mm (0 in.)

SS0MH–04

TORQUE SPECIFICATION

Part tightened		N·m	kgf·cm	ft·lbf
Front seat x Body		37	375	27
Front suspension member x Body	Bolt A	113	1,152	83
(See page MA–7)	Bolt B	157	1,600	116
Rear suspension member x Body		90	918	66

ENGINE MECHANICAL

SS174–03

SERVICE DATA

Compression pressure		at 250 rpm STD	728 kPa (7.4 kgf/cm^2, 106 psi)
		Minimum	534 kPa (5.4 kgf/cm^2, 77 psi)
		Difference between each cylinder	98 kPa (1.0 kgf/cm^2, 14 psi)
Valve clearance		at cold Intake	0.17 – 0.23 mm (0.007 – 0.009 in.)
		Exhaust	0.27 – 0.33 mm (0.011 – 0.013 in.)
	Valve lifter for repair part	No. 06	5.060 mm (0.1992 in.)
		No. 08	5.080 mm (0.2000 in.)
		No. 10	5.100 mm (0.2008 in.)
		No. 12	5.120 mm (0.2016 in.)
		No. 14	5.140 mm (0.2024 in.)
		No. 16	5.160 mm (0.2031 in.)
		No. 18	5.180 mm (0.2039 in.)
		No. 20	5.200 mm (0.2047 in.)
		No. 22	5.220 mm (0.2055 in.)
		No. 24	5.240 mm (0.2063 in.)
		No. 26	5.260 mm (0.2071 in.)
		No. 28	5.280 mm (0.2079 in.)
		No. 30	5.300 mm (0.2087 in.)
		No. 32	5.320 mm (0.2094 in.)
		No. 34	5.340 mm (0.2102 in.)
		No. 36	5.360 mm (0.2110 in.)
		No. 38	5.380 mm (0.2118 in.)
		No. 40	5.400 mm (0.2126 in.)
		No. 42	5.420 mm (0.2134 in.)
		No. 44	5.440 mm (0.2142 in.)
		No. 46	5.460 mm (0.2150 in.)
		No. 48	5.480 mm (0.2157 in.)
		No. 50	5.500 mm (0.2165 in.)
		No. 52	5.520 mm (0.2173 in.)
		No. 54	5.540 mm (0.2181 in.)
		No, 56	5.560 mm (0.2189 in.)
		No. 58	5.580 mm (0.2197 in.)
		No. 60	5.600 mm (0.2205 in.)
		No. 62	5.620 mm (0.2213 in.)
		No. 64	5.640 mm (0.2220 in.)
		No. 66	5.660 mm (0.2228 in.)
		No. 68	5.680 mm (0.2236 in.)
		No. 70	5.700 mm (0.2244 in.)
		No. 72	5.720 mm (0.2252 in.)
		No. 74	5.740 mm (0.2260 in.)
Ignition timing			7 – 15° BTDC @ idle
Idle speed		w/ Cooling fan off	1,000 ± 50 rpm (A/C OFF) 1,200 ± 50 rpm (A/C ON)
Chain and timing sprocket	Chain length at 16 links	Maximum	123.2 mm (4.850 in.)
	Camshaft timing sprocket wear (w/ chain)	Minimum	96.2 mm (3.787 in.)
	Crankshaft timing sprocket wear (w/ chain)	Minimum	50.5 mm (1.988 in.)
Chain tensioner slipper and vibration damper	Wear	Maximum	1.0 mm (0.039 in.)

Cylinder head	Warpage		
	Cylinder brock side	Maximum	0.05 mm (0.0020 in.)
	Intake manifold side	Maximum	0.01 mm (0.0394 in.)
	Exhaust manifold side	Maximum	0.01 mm (0.0394 in.)
	Valve seat		20˚, 45˚, 75˚
	Refacing angle		45˚
	Contacting angle		1.0 – 1.4 mm (0.039 – 0.055 in.)
	Contacting width		9.685 – 9.706 mm (0.38130 – 0.38213 in.)
	Valve guide bushing bore diameter	STD	9.735 – 9.756 mm (0.38327 – 0.38493 in.)
		O/S 0.05	
Valve guide bushing	Inside diameter		5.010 – 5.030 mm (0.19724 – 0.19803 in.)
	Protrusion height		9.0 – 9.4 mm (0.354 – 0.370 in.)
Valve	Valve overall length	STD Intake	89.25 mm (3.5138 in.)
		Exhaust	87.90 mm (3.4606 in.)
		Minimum Intake	88.95 mm (3.5020 in.)
		Exhaust	87.60 mm (3.4488 in.)
	Valve face angle		44.5˚
	Stem diameter	Intake	4.970 – 4.985 mm (0.19567 – 0.19626 in.)
		Exhaust	4.965 – 4.980 mm (0.19547 – 0.19606 in.)
	Stem oil clearance	STD Intake	0.025 – 0.060 mm (0.00098 – 0.00236 in.)
		Exhaust	0.030 – 0.065 mm (0.00118 – 0.00256 in.)
		Maximum Intake	0.08 mm (0.0031 in.)
		Exhaust	0.10 mm (0.0039 in.)
	Margin thickness	STD	1.00 – 1.15 mm (0.039 – 0.045 in.)
		Minimum	0.7 mm (0.028 in.)
Valve spring	Deviation	Maximum	1.6 mm (0.063 in.)
	Angle (Reference)	Maximum	2˚
	Free length		59.77 mm (2.353 in.)
	Installed tension at 32.5 mm (1.280 in.)		140 – 154 N (14.3 – 15.7 kgf, 31.5 – 34.6 lbf)
	Maximum working tension at 23.9 mm (0.941 in.)		180 – 198 N (18.4 – 20.2 kgf, 40.4 – 44.8 lbf)
Valve lifter	Lifter diameter		30.966 – 30.976 mm (1.21913 – 1.21952 in.)
	Lifter bore diameter		31.009 – 31.025 mm (1.22082 – 1.22145 in.)
	Oil clearance	STD	0.031 – 0.059 mm(0.00122 – 0.00232 in.)
		Maximum	0.1 mm (0.004 in.)
Camshaft	Thrust clearance	STD	0.040 – 0.095 mm (0.0016 – 0.0037 in.)
		Maximum	0.11 mm (0.0043 in.)
	Journal oil clearance	STD	0.040 – 0.095 mm (0.00157 – 0.00374 in.)
		Maximum	0.115 mm (0.00453 in.)
	Journal diameter	No. 1	34.449 – 34.465 (1.35626 – 1.35689 in.)
		Others	22.949 – 22.965 (0.90350 – 0.90413 in.)
	Circle run out	Maximum	0.03 mm (0.0012 in.)
	Cam lobe height		
		STD Intake	42.310 – 42.410 mm (1.62637 – 1.66968 in.)
		Exhaust	44.046 – 44.146 mm (1.73409 – 1.73803 in.)
		Minimum Intake	42.16 mm (1.6598 in.)
		Exhaust	43.90 mm (1.7283 in.)
Intake manifold	Warpage	Maximum	0.10 mm (0.0039 in.)
Exhaust manifold	Warpage	Maximum	0.70 mm (0.0276 in.)

Cylinder block	Cylinder head surface warpage	Maximum	0.05 mm (0.0020 in.)
	Cylinder bore diameter	STD	75.000 – 75.013 mm (2.95275 – 2.95326 in.)
		Maximum	75.013 mm (2.95326 in.)
	Main journal bore diameter	Mark 0	50.000 – 50.003 mm (1.96850 – 1.96862 in.)
		Mark 1	50.003 – 50.005 mm (1.96862 – 1.96870 in.)
		mark 2	50.005 – 50.007 mm (1.96870 – 1.96878 in.)
		Mark 3	50.007 – 50.010 mm (1.96878 – 1.96889 in.)
		Mark 4	50.010 – 50.012 mm (1.96889 – 1.96897 in.)
		Mark 5	50.012 – 50.014 mm (1.96897 – 1.96905 in.)
		Mark 6	50.014 – 50.016 mm (1.96905 – 1.96913 in.)
	12 pointed head bearing cap sub–assembly bolt diameter		
		at tension portion STD	7.3 – 7.5 mm (0.287 – 0.295 in.)
		Minimum	7.3 mm (0.287 in.)
Piston and Piston ring	Piston diameter		
		at 27 mm (1.063 in.) from the piston head	74.945 – 74.955 mm (2.95058 – 2.95098 in.)
	Piston oil clearance	STD	0.045 – 0.068 mm (0.00177 – 0.00268 in.)
		Maximum	0.08 mm (0.0031 in.)
	Piston ring groove clearance		0.030 – 0.070 mm (0.0012 – 0.0028 in.)
	Piston ring end gap		
		STD No. 1	0.22 – 0.32 mm (0.0087 – 0.0126 in.)
		No. 2	0.32 – 0.47 mm (0.0126 – 0.0185 in.)
		Oil	0.15 – 0.45 mm (0.0059 – 0.0177 in.)
		Maximum No. 1	0.88 mm (0.0346 in.)
		No. 2	1.03 mm (0.0406 in.)
		Oil	0.92 mm (0.0362 in.)
Connecting rod	Thrust clearance	STD	0.16 – 0.36 mm (0.0063 – 0.0142 in.)
		Maximum	0.36 mm (0.0142 in.)
	Connecting rod thickness		19.788 – 19.840 mm (0.779 – 0.781 in.)
	Connecting rod bearing center wall thickness		
	Reference	Mark 1	1.488 – 1.492 mm (0.0586 – 0.0587 in.)
		Mark 2	1.492 – 1.496 mm (0.0587 – 0.0589 in.)
		Mark 3	1.496 – 1.500 mm (0.0589 – 0.0591 in.)
	Connecting rod oil clearance	STD	0.016 – 0.040 mm (0.0006 – 0.0016 in.)
		Maximum	0.06 mm (0.0024 in.)
	Rod out–of–alignment	Maximum per 100 mm (3.94 in.)	0.05 mm (0.0020 in.)
	Rod twist	Maximum per 100 mm (3.94 in.)	0.05 mm (0.0020 in.)
	Bushing inside diameter		18.010 – 18.019 mm (0.7091 – 0.7094 in.)
	Piston pin diameter		17.988 – 18.007 mm (0.7086 – 0.7089 in.)
	Bushing oil clearance	STD	0.009 – 0.015 mm (0.0003 – 0.0006 in.)
		Maximum	0.05 mm (0.0020 in.)
	Connecting rod bolt diameter		
		at tension portion STD	6.6 – 6.7 mm (0.260 – 0.264 in.)
		Minimum	6.4 mm (0.252 in.)

Crankshaft	Thrust clearance	STD	0.090 – 0.190 mm (0.00354 – 0.00748 in.)
		Maximum	0.30 mm (0.012 in.)
	Thrust washer thickness		2.430 – 2.480 mm (0.09567 – 0.09764 in.)
	Main journal oil clearance	STD	0.010 – 0.023 mm (0.0004 – 0.0009 in.)
		Maximum	0.07 mm (0.0028 in.)
	Main journal diameter		
	Reference	Mark 0	45.988 – 45.990 mm (1.81054 – 1.81062 in.)
		Mark 1	45.990 – 45.992 mm (1.81062 – 1.81071 in.)
		Mark 2	45.992 – 45.994 mm (1.81071 – 1.81078 in.)
		Mark 3	45.994 – 45.996 mm (1.81078 – 1.81086 in.)
		Mark 4	45.996 – 45.998 mm (1.81086 – 1.81094 in.)
		Mark 5	45.998 – 46.000 mm (1.81094 – 1.81102 in.)
	Main bearing center wall thickness		
	Reference	Mark 1	1.992 – 1.995 mm (0.07843 – 0.07854 in.)
		Mark 2	1.995 – 1.998 mm (0.07854 – 0.07866 in.)
		Mark 3	1.998 – 2.001 mm (0.07866 – 0.07878 in.)
		Mark 4	2.001 – 2.004 mm (0.07878 – 0.07890 in.)
	Crank pin diameter		39.992 – 40.000 mm (1.5745 – 1.5748 in.)
	Circle run out	Maximum	0.03 mm (0.0012 in.)
	Main journal taper and out–of round	Maximum	0.02 mm (0.0008 in.)
	Crank pin taper and out–of round	Maximum	0.02 mm (0.0008 in.)

SS175–03

TORQUE SPECIFICATION

Part tightened		N·m	kgf·cm	ft·lbf
Plug x Timing chain cover		15	150	11
Chain vibration damper x Cylinder block		9.0	92	80 in .·lbf
Chain tensioner		9.0	92	80 in .·lbf
Timing chain cover	Bolt A	11	112	8
	Bolt B	24	245	18
	Bolt C	11	112	8
	Bolt D	24	245	18
	Bolt E	11	112	8
	Nut F	24	245	18
	Nut G	11	112	8
RH engine mounting bracket x Timing chain cover		55	561	41
Crankshaft position sensor x Timing chain cover	Bolt A	7.5	76	66 in .·lbf
	Bolt B	11	112	8
Oil control valve		8.0	82	71 in .·lbf
Crankshaft pulley x Crankshaft		128	1,300	94
Cylinder head cover x Cylinder		10	100	7
RH engine mounting insulator	Bolt A	45	459	33
	Bolt B	52	530	38
	Nut	52	530	38
Cylinder head x Cylinder block	1st	29.4	300	22
	2nd	Turn 90˚	Turn 90˚	Turn 90˚
	3rd	Turn 90˚	Turn 90˚	Turn 90˚
Water bypass pipe x Cylinder head		9.0	92	80 in .·lbf
No. 1 camshaft bearing cap x Cylinder head		23	235	17
No. 2 camshaft bearing cap x Cylinder head		12.7	130	10
Camshaft timing sprocket x Camshaft		64	650	47
Valve timing controller assembly x Camshaft		64	650	47
Intake manifold x Cylinder head		20	204	15
Exhaust manifold x Cylinder head		27	275	20
Upper heat insulator x Exhaust manifold		8.0	82	71 in .·lbf
Exhaust manifold stay x Cylinder block		27	275	20
Front exhaust pipe x Tailpipe	Bolt A	62	630	46
	Bolt B	32	330	24
Connecting rod cap x Connecting rod	1st	15	150	11
	2nd	Turn 90˚	Turn 90˚	Turn 90˚
Bearing cap x Cylinder block	1st	22	220	16
	2nd	Turn 90˚	Turn 90˚	Turn 90˚
Oil pan No. 1 x Cylinder block		24	245	18
Oil strainer x Oil pan No. 1		11	112	8
Oil pan No. 2 x Oil pan No. 1		9.0	92	80 in.·lbf
Oil filter union x Oil pan No. 1		30	306	21
Engine coolant drain plug x Cylinder block		12.7	130	9
Knock sensor x Cylinder block		44	450	33
Water bypass pipe x Cylinder block		9.0	90	80 in.·lbf
Flywheel x Crankshaft		84	857	62
Damper spring x Flywheel		16	163	12

EMISSION CONTROL

SS17E–01

TORQUE SPECIFICATION

Part tightened	N·m	kgf·cm	ft·lbf
PCV valve x Cylinder head cover	27	275	20

SFI

SS102–07

SERVICE DATA

Fuel pump	Resistance	at 20˚C (68˚F)	0.2 – 3.0 Ω
Injector	Resistance Injection volume Difference between each cylinder Fuel leakage	at 21 ˚C (68 ˚F)	13.4 – 14.2 Ω 36 – 46 cm^3 (2.1 – 2.8 cu in.) per 15 sec. 10 cm^3 (0.7 cu in.) or less 1 drop or less per 12 minutes
Mass air flow meter	Resistance at –20˚C (–4˚F) at 20˚C (68˚F) at 60˚C (140˚F)	 THA – E2 THA – E2 THA – E2	 13.6 – 18.4 kΩ 2.21 – 2.69 kΩ 0.49 – 0.67 kΩ
Throttle control motor	Resistance at 20˚C (68˚F)	 M+ – M–	 0.3 – 100 Ω
Throttle position sensor	Resistance at 20˚C (68˚F)	 VC – E2	 1.2 – 3.2 kΩ
VSV for EVAP	Resistance	at 20˚C (68˚F)	27 – 33 Ω
VSV for CCV	Resistance	at 20˚C (68˚F)	25 – 30 Ω
VSV for Purge flow switching valve	Resistance	at 20˚C (68˚F)	33 – 39 Ω
VSV for HCAC	Resistance	at 20˚C (68˚F)	33 – 39 Ω
ECT sensor	Resistance	at –20˚C (–4˚F) at 0˚C (32˚F) at 20˚C (68˚F) at 40˚C (104˚F) at 60˚C (140˚F) at 80˚C (176˚F)	10 – 20 kΩ 4 – 7 kΩ 2 – 3 kΩ 0.9 – 1.3 kΩ 0.4 – 0.7 kΩ 0.2 – 0.4 kΩ
Vacuum sensor for HCAC	Power sorce voltage		4.5 – 5.5 V
Vapor pressure sevsor	Power sorce voltage Output voltage		4.5 – 5.5 V 3.0 – 3.6 V
Heated oxygen sensor	Heater coil resistance	at 20˚C (68˚F)	11 – 16 Ω
Accelerator pedal position sensor	Resistance at 20˚C (68˚F)	 Vcp_1 – Ep_1 Vcp_2 – Ep_2	 1.5 – 6.0 kΩ
Fuel cut rpm	Fuel return rpm		1,400 rpm

SS103–06

TORQUE SPECIFICATION

Part tightened	N·m	kgf·cm	ft·lbf
Fuel pump assembly x Fuel tank	4.0	40	35 in.·lbf
Delivery pipe x Cylinder head	19	194	14
Throttle body x Intake manifold	20	204	15
Camshaft timing oil control valve x Cylinder head	7.5	76	66 in.·lbf
Knock sensor x Cylinder block	44	450	33
Heated oxygen sensor (Bank1 sensor1) x Exhaust manifold	44	440	31
Heated oxygen sensor (Bank1 sensor2) x Exhaust pipe	44	440	31

COOLING

SERVICE DATA

SS176–03

Drive belt	Tension (Reference)	New belt	110 ± 11 lbf
		Used belt	67 ± 10 lbf
Thermostat	Valve opening temperature		80.0 – 84.0˚C (176 – 183˚F)
		at 90˚C (199˚F)	8.5 mm (0.345 in.) or more
Radiator cap	Relief valve opening pressure	STD	74 – 103 kPa (0.75 – 1.05 kgf/cm^2, 10.7 – 14.9 psi)
		Minimum	79 kPa (0.8kgf/cm^2, 11.5 psi)
Electric cooling fan	Amperage	STD	9.2 – 11.0 A

SS177–02

TORQUE SPECIFICATION

Part tightened	N·m	kgf·cm	ft·lbf
Drain plug	12.7	130	9
Water pump x Timing chain cover	11	110	8
Pump pulley x Water pump	15	150	11
Water inlet x Cylinder block	9.0	90	80 in.·lbf
Electric cooling fan assembly x Radiator	7.5	76	66 in.·lbf
Fan motor x Fan shroud	2.65	27	23 in.·lbf
Fan x Fan motor	6.4	66	57 in.·lbf

LUBRICATION

SERVICE DATA

SS178–01

Oil pressure		at idle speed	29 kPa (0.3 kgf/cm^2,4.3 psi) or more
		at 3,000 rpm	150 – 550 kPa (1.5 – 5.6 kgf/cm^2, 22 – 80 psi)
Oil pump	Side clearance	STD	0.03 – 0.09 mm (0.0012 – 0.0035 in.)
		Maximum	0.15 mm (0.0059 in.)
	Tip clearance	STD	0.060 – 0.180 mm (0.0024 – 0.0071 in.)
		Maximum	0.28 mm (0.0110 in.)
	Body clearance	STD	0.250 – 0.325 mm (0.00984 – 0.01280 in.)
		Maximum	0.425 mm (0.01673 in.)

SS179–02

TORQUE SPECIFICATION

Part tightened		N·m	kgf·cm	ft·lbf
Oil pressure switch x Cylinder block		13	130	9
Oil drain plug x Oil pan		38	387	28
Plug x Oil pump body		25	255	18
Oil pump cover x Timing chain cover	Bolt	8.8	90	78 in.·lbf
	Screw	10.3	105	8

IGNITION

SS17A–03

SERVICE DATA

Spark plug	Recommended spark plug	DENSO	SK16R11
		NGK	IFR5A11
	Electrode gap	STD	1.0 – 1.1 mm (0.039 – 0.043 in.)
		Maximum	1.2 mm (0.047 in.)
Camshaft position sensor	Resistance	at cold	1,630 – 2,740 Ω
		at hot	2,065 – 3,225 Ω
Crankshaft position sensor	Resistance	at cold	985 – 1,600 Ω
		at hot	1,265 – 1,890 Ω

SS17B–01

TORQUE SPECIFICATION

Part tightened	N·m	kgf·cm	ft·lbf
Spark plug x Cylinder head	18	184	13
Ignition coil x Cylinder head	9.0	92	80 in.·lbf
Camshaft position sensor x Cylinder head	8.0	82	71 in.·lbf
Crankshaft position sensor x Cylinder block	7.5	76	66 in.·lbf

HYBRID VEHICLE CONTROL

SS1HH–02

SERVICE DATA

HV battery thermistor	Resistance	at 25 ˚C (77 ˚F)	
		1 ↔ 2	9 – 11 kΩ
		3 ↔ 4	9 – 11 kΩ
		5 ↔ 6	9 – 11 kΩ
		7 ↔ 8	9 – 11 kΩ
		9 ↔ 10	9 – 11 kΩ
Converter	Output current		100 A or less
Water temperature switch		at 48 ˚C (118.4 ˚F) or less	No continuity
		at more than 55 ˚C (131 ˚F)	Continuity
Service plug	Service plug lever	Close	Continuity
		Stand up	No continuity
Auxiliary battery	Voltage	at 20 ˚C (68 ˚F)	12.5 – 12.9 V

SS1HI–01

TORQUE SPECIFICATION

Part tightened		N·m	kgf·cm	ft·lbf
Battery module x Battery carrier		4.0	40	35 in.·lbf
Battery clamp bolt x Battery carrier		23	230	16
RH battery bracket x Battery carrier		23	230	16
Battery ECU x Battery carrier		3.3	33	29 in.·lbf
Busber module x Battery module		6.0	61	53 in.·lbf
Power cable x SMR		5.0	50	44 in.·lbf
Service plug assembly x Battery carrier		6.0	61	53 in.·lbf
Battery cover x Battery carrier (See page HV–9)	Bolt A Bolt B Bolt C Screw	18 8.0 7.0 6.0	185 80 70 61	13 71 in.·lbf 62 in.·lbf 53 in.·lbf
Battery bracket		18	185	13
HV battery x Body		18	185	13
Battery carrier catch bracket x Battery bracket		8.0	80	71 in.·lbf
Bracket x Converter & Inverter assembly		25	255	18
Upper inverter cover x Converter & inverter assembly		2.5	25	22 in.·lbf
Inverter reservoir tank x Converter & inverter assembly		8.0	82	71 in.·lbf
Converter & inverter assembly x Body		21	214	15
Ground cable x Radiator upper support		8.0	82	71 in.·lbf
Power cable for MG1 x Converter & inverter assembly		7.0	71	62 in.·lbf
Connector cover x Converter & inverter assembly		20	204	15
Power cable for MG2 x Converter & inverter assembly (See page HV–22)	Bolt A Bolt B	19.5 8.0	199 82	14 71 in.·lbf
Inverter terminal cover x Converter & inverter assembly		8.0	82	71 in.·lbf
HV water pump x Body		7.0	70	62 in.·lbf
Inverter radiator x Body		8.0	82	71 in.·lbf
Water temperature switch x Inverter radiator		7.4	75	65 in.·lbf
Blower assembly x Body		5.0	51	44 in.·lbf
Lower quarter ventilator duct x Body		4.0	41	35 in.·lbf
Inner ventilator duct x Body		4.0	41	35 in.·lbf
HV ECU x Body		6.0	60	53 in.·lbf

HYBRID TRANSAXLE

SS1HE–01

SERVICE DATA

Differential case side bearing preload	
(Starting torque)	New bearing:
	0.98 – 1.57 N·m (9.99 – 16.01 kgf·cm, 8.67 – 13.90 in.·lbf)
	Reused bearing:
	0.49 – 0.78 N·m (5.00 – 7.95 kgf·cm, 4.43 – 6.90 in.·lbf)
(Turning torque 60 rpm)	0.78 – 1.37 N·m (7.95 – 13.97 kgf·cm, 6.90 – 12.13 in.·lbf)
Differential preload adjusting shim thickness	
Mark 1	1.80 mm (0.0709 in.)
Mark 2	1.83 mm (0.0720 in.)
Mark 3	1.86 mm (0.0732 in.)
Mark 4	1.89 mm (0.0744 in.)
Mark 50	1.92 mm (0.0756 in.)
Mark 51	1.94 mm (0.0764 in.)
Mark 52	1.96 mm (0.0772 in.)
Mark 53	1.98 mm (0.0780 in.)
Mark 54	2.00 mm (0.0787 in.)
Mark 55	2.02 mm (0.0795 in.)
Mark 56	2.04 mm (0.0803 in.)
Mark 57	2.06 mm (0.0811 in.)
Mark 58	2.08 mm (0.0819 in.)
Mark 59	2.10 mm (0.0827 in.)
Mark 60	2.12 mm (0.0835 in.)
Mark 61	2.14 mm (0.0843 in.)
Mark 62	2.16 mm (0.0850 in.)
Mark 63	2.18 mm (0.0858 in.)
Mark 64	2.20 mm (0.0866 in.)
Mark 65	2.22 mm (0.0874 in.)
Mark 66	2.24 mm (0.0882 in.)
Mark 67	2.26 mm (0.0890 in.)
Mark 68	2.28 mm (0.0898 in.)
Mark 69	2.30 mm (0.0906 in.)
Mark 70	2.32 mm (0.0913 in.)
Mark 19	2.34 mm (0.0921 in.)
Mark 20	2.37 mm (0.0933 in.)
–	2.40 mm (0.0945 in.)
Mark 22	2.43 mm (0.0957 in.)
Mark 23	2.46 mm (0.0969 in.)
Counter driven gear side bearing preload	
(Starting torque)	New bearing:
	3.81 – 6.10 N·m (38.85 – 62.20 kgf·cm, 33.72 – 53.99 in.·lbf)
	Reused bearing:
	1.91 – 3.03 N·m (19.48 – 30.90 kgf·cm, 16.91 – 26.82 in.·lbf)
(Turning torque 60 rpm)	3.29 – 6.66 N·m (33.55 – 67.91 kgf·cm, 29.12 – 58.95 in.·lbf)

Counter driven gear preload adjusting shim thickness	
Mark 1	1.25 mm (0.0492 in.)
Mark 2	1.28 mm (0.0504 in.)
Mark 3	1.31 mm (0.0516 in.)
Mark 50	1.34 mm (0.0528 in.)
Mark 51	1.36 mm (0.0535 in.)
Mark 52	1.38 mm (0.0543 in.)
Mark 53	1.40 mm (0.0551 in.)
Mark 54	1.42 mm (0.0559 in.)
Mark 55	1.44 mm (0.0567 in.)
Mark 56	1.46 mm (0.0575 in.)
Mark 57	1.48 mm (0.0583 in.)
Mark 58	1.50 mm (0.0591 in.)
Mark 59	1.52 mm (0.0598 in.)
Mark 60	1.54 mm (0.0606 in.)
Mark 61	1.56 mm (0.0614 in.)
Mark 62	1.58 mm (0.0622 in.)
Mark 63	1.60 mm (0.0630 in.)
Mark 64	1.62 mm (0.0638 in.)
Mark 65	1.64 mm (0.0646 in.)
Mark 66	1.66 mm (0.0654 in.)
Mark 67	1.68 mm (0.0661 in.)
Mark 68	1.70 mm (0.0669 in.)
Mark 69	1.72 mm (0.0677 in.)
Mark 70	1.74 mm (0.0685 in.)
Mark 18	1.76 mm (0.0693 in.)
Mark 19	1.79 mm (0.0705 in.)
Mark 20	1.82 mm (0.0717 in.)
Mark 21	1.85 mm (0.0728 in.)
Mark 22	1.88 mm (0.0740 in.)
Input shaft shim thickness	
Mark 1	1.00 mm (0.0394 in.)
Mark 2	1.20 mm (0.0472 in.)
Mark 3	1.40 mm (0.0551 in.)
Mark 4	1.60 mm (0.0630 in.)
Mark 5	1.80 mm (0.0709 in.)
Mark 6	2.00 mm (0.0787 in.)
Mark 7	2.20 mm (0.0866 in.)
Mark 8	2.40 mm (0.0945 in.)
Mark 9	2.60 mm (0.1024 in.)
Mark 10	2.80 mm (0.1102 in.)
Mark 11	3.00 mm (0.1181 in.)
Mark 12	3.20 mm (0.1260 in.)
Counter drive gear shim thickness	
Mark A	1.35 mm (0.0531 in.)
Mark B	1.40 mm (0.0551 in.)
Mark C	1.45 mm (0.0571 in.)
Mark D	1.50 mm (0.0591 in.)
Mark E	1.55 mm (0.0610 in.)
Mark F	1.60 mm (0.0630 in.)
Mark G	1.65 mm (0.0650 in.)
Mark H	1.70 mm (0.0669 in.)
Mark J	1.75 mm (0.0689 in.)
Mark K	1.80 mm (0.0709 in.)
Mark L	1.85 mm (0.0728 in.)
Differential oil seal LH and RH drive in depth	2.7 ± 0.5 mm (0.11 ± 0.02 in.)
Oil pressure	39.2 – 78.4 kPa (0.4 – 0.8 kgf/cm^2, 5.7 – 11.4 psi)

Differential side gear backlash	Standard	0.05 – 0.20 mm (0.0020 – 0.0079 in.)
Differential side gear washer thickness		0.95 mm (0.0374 in.) 1.00 mm (0.0394 in.) 1.05 mm (0.0414 in.) 1.10 mm (0.0433 in.) 1.15 mm (0.0453 in.) 1.20 mm (0.0472 in.)
Sun gear bush diameter	Standard Maximum	25.525 – 25.546 mm (1.00492 – 1.00575 in.) 25.596 mm (1.00771 in.)

SS1HF–01

TORQUE SPECIFICATION

Part tightened	N·m	kgf·cm	ft·lbf
Oil pump cover x MG2 assembly	5.5	56	49 in.·lbf
Transaxle oil drain plug	49	498	36
Hybrid transaxle assembly x Engine	33	332	24
Coolant drain plug x MG1 assembly	39	400	29
Screw plug x MG1 assembly	12.7	130	9
Screw plug x MG2 assembly	24.5	250	18
Filler plug x MG2 assembly	39	400	29
MG1 assembly x MG2 assembly	25	250	18
Sleeve bracket x MG1 assembly	13	130	9
Lock clamp x MG1 assembly	5.4	55	48 in.·lbf
Oil strainer x MG2 assembly	5.5	56	49 in.·lbf
Oil pan x MG2 assembly	7.6	77	67 in.·lbf
Parking shaft cover x MG2 assembly	13	130	10
Motor water jacket cover x MG2 assembly	5.5	56	49
Housing tube x MG1 assembly	15	152	11
Detent spring set bolt	10	100	7
Parking cover x MG2 assembly	5.5	56	49 in.·lbf
Oil pump cover x plug	7.35	75	65 in.·lbf
Wiring harness connector x MG2 assembly	5.5	56	49 in.·lbf
Wiring harness connector x MG1 assembly	5.5	56	49 in.·lbf
Water jacket union	50	510	37
High–voltage cable set bolt (3 under power cable cover)	18	183	13
High–voltage cable set bolt (3 outside)	5.5	56	49 in.·lbf
Power cable cover x MG1 assembly	4.8	48	42 in.·lbf
Mounting bracket x MG2 assembly	52	530	38
Shift lever assembly x Steering column	8	80	71 in.·lbf
Differential case x Ring gear	87	90	64

SUSPENSION AND AXLE

SS13W–06

SERVICE DATA

Cold tire inflation pressure	Tire size: P175/65R14 84S	Front Rear	240 kPa (2.4 kgf/cm^2, 35 psi) 230 kPa (2.3 kgf/cm^2, 33 psi)
Front wheel alignment	Vehicle height P175/65R14	Front*1 Rear*2	 191 mm (7.52 in.) 239 mm (9.41 in.)
	Camber	 Right–left error	–0°26' ± 45' (–0.43° ± 0.75°) 45' (0.75°) or less
	Caster	 Right–left error	1°02' ± 45' (1.03° ± 0.75°) 45' (0.75°) or less
	Steering axis inclination	 Right–left error	9°52' ± 45' (9.87° ± 0.75°) 45' (0.75°) or less
	Toe–in (total)	 Rack end length difference	0°06' ± 12' (0.1° ± 0.2°, 1 ± 2 mm, 0.04± 0.08 in.) 1.5 mm (0.059 in.) or less
	Wheel angle	 Inside wheel Outside wheel: Reference	 42°42' ± 2° (42.70° ± 2°) 35°54' (35.90°)
Rear wheel alignment	Camber	 Right–left error	–1°30' ± 45' (–0.93° ± 0.75°) 45' (0.75°) or less
	Toe–in (total)		0°06' ± 20' (0.1° ± 0.33°) 1 ± 3.0 mm (0.04 ± 0.12 in.)
Front axle	Axle bearing backlash	Maximum	0.05 mm (0.0020 in.)
	Axle hub deviation	Maximum	0.07 mm (0.0028 in.)
Front drive shaft	Drive shaft standard length	LH RH	579.9 ± 5.0 mm (22.831 ± 0.197 in.) 836.9 ± 5.0 mm (32.949 ± 0.197 in.)
Front suspension	Lower suspension arm ball joint turning torque		1.0 – 4.9 N·m (10 – 50 kgf·cm, 8.7 – 43 in.·lbf)
	Stabilizer bar link ball joint turning torque		0.05 – 1.0 N·m (0.5 – 10 kgf·cm, 0.4 – 8.7 in.·lbf)
Rear axle	Axle bearing backlash	Maximum	0.05 mm (0.0020 in.)
	Axle hub deviation	Maximum	0.07 mm (0.0028 in.)

*1: Front measuring point
Measure the distance from the ground to the head center of the front side lower suspension arm mounting bolt.
*2: Rear measuring point
Measure the distance from the ground to the center of the rear axle beam mounting bolt.

SS04X–12

TORQUE SPECIFICATION

Part tightened		N·m	kgf·cm	ft·lbf
FRONT AXLE				
Hub nut		103	1,050	76
Tie rod end lock nut		74	750	55
Steering knuckle x Shock absorber		153	1,560	113
Steering knuckle x Brake caliper		107	1,090	79
Steering knuckle x Tie rod end		49	500	36
Axle hub x Drive shaft		216	2,200	159
Lower ball joint x Lower suspension arm		142	1,450	105
Lower ball joint x Steering knuckle		103	1,050	76
Steering knuckle x Dust cover		8.3	85	74 in.·lbf
ABS speed sensor set bolt		8.0	82	71 in.·lbf
FRONT SUSPENSION				
Suspension support x Body		39	400	29
Suspension support x Piston rod		47	475	34
Flexible hose x Shock absorber		29	300	22
ABS speed sensor wire harness x Shock absorber		5.4	55	48 in.·lbf
Lower suspension arm set bolt		137	1,397	101
Suspension member set bolt	Front side	113	1,152	83
	Rear side	157	1,600	116
Torque rod x Suspension member		100	1,030	74
Stabilizer bar bracket x Suspension member		19	194	14
Stabilizer bar link set nut		74	755	55
REAR AXLE				
Hub nut		103	1,050	76
Axle hub set bolt		52	525	38
REAR SUSPENSION				
Shock absorber x Axle Beam		80	816	59
ABS speed sensor wire harness x Axle Beam		5.4	55	48 in.·lbf
Spring bracket x Body		80	816	59
Shock absorber center nut		56	571	41
Parking brake cable set bolt		5.4	55	48 in.·lbf
Toe control link x Body		90	918	66
Toe control link x Axle beam		90	918	66
Stabilizer bar set bolt		149	1,519	110

BRAKE

SS0LM–06

SERVICE DATA

BRAKE PEDAL		
Brake pedal height from asphalt sheet		127 – 137 mm (5.08 – 5.48 in.)
Brake pedal freeplay		1 – 6 mm (0.04 – 0.24 in.)
Brake pedal reserve distance at 200 N (20 kgf, 45 lbf)		More than 85 mm (3.35 in.)
PARKING BRAKE PEDAL		
Parking brake pedal travel at 294N (30 Kgf, 66.1 lbf)		5 – 8 clicks
FRONT BRAKE		
Front brake pad thickness	STD	11.0 mm (0.433 in.)
Front brake pad thickness	Minimum	1.0 mm (0.039 in.)
Front brake disc thickness	STD	22.0 mm (0.984 in.)
Front brake disc thickness	Minimum	20.0 mm (0.906 in.)
Front brake disc runout	Maximum	0.05 mm (0.0020 in.)
REAR BRAKE		
Drum brake shoe lining thickness	STD	4.0 mm (0.157 in.)
Drum brake shoe lining thickness	Minimum	1.0 mm (0.039 in.)
Rear brake drum inside diameter	STD	200.0 mm (7.874 in.)
Rear brake drum inside diameter	Maximum	201.0 mm (7.913 in.)
Rear brake drum to shoe clearance		0.6 mm (0.024 in.)

SS0LN–06

TORQUE SPECIFICATION

Part tightened	N·m	kgf·cm	ft·lbf
BRAKE PEDAL			
Pedal bracket x Reinforcement	14	143	10
Brake pedal x Pedal bracket	37	375	27
PARKING BRAKE PEDAL			
Pedal bracket x Reinforcement	14	143	10
Pedal bracket x Body	13	130	9
Brake pedal x Pedal bracket	32	327	24
BRAKE MASTER CYLINDER			
Master cylinder x Pedal bracket	13	130	9
Master cylinder clevis lock nut	26	265	19
HYDRAULIC BRAKE BOOSTER			
Hydraulic brake booster assembly x Body	19	194	14
Sub–bracket x Body	19	194	14
Reservoir bracket x Body	18	184	13
Reservoir x Bracket	7.5	77	66 in.·lbf
Accumulator x Booster pump	54	550	36
Pressure switch assembly x Brake power supply bracket	7.8	80	69 in.·lbf
Booster pump x Brake booster pump bracket No. 2	7.8	80	69 in.·lbf
Pressure switch assembly x Brake booster pump bracket No. 1	7.8	80	69 in.·lbf
Connector bracket x Pressure switch assembly	7.8	80	69 in.·lbf
Pressure switch assembly x Brake booster pump bracket No. 2	7.8	80	69 in.·lbf
FRONT BRAKE			
Front disc brake caliper installation bolt	34	350	25
Bleeder plug	8.3	85	74 in.·lbf
Front disc brake caliper x Flexible hose	30	310	22
Front disc brake torque plate x Steering knuckle	107	1,090	79
REAR BRAKE			
Bleeder plug	8.5	87	75 in.·lbf
Rear drum brake wheel cylinder x Backing plate	10	100	7
BRAKE ACTUATOR			
Brake actuator assembly x Body	19	195	14
Brake actuator x Actuator bracket	11	120	8
SPEED SENSOR			
Front speed sensor installation bolt	8.0	82	71 in.·lbf
Front speed sensor harness clamp bolt	5.5	56	49 in.·lbf
Rear speed sensor harness clamp bolt	5.5	56	49 in.·lbf
BRAKE LINE			
Brake line union nut	15	155	11

STEERING

SERVICE DATA

SS16Y–09

STEERING WHEEL		
Steering wheel freeplay	Maximum	30 mm (1.18 in.)
Steering effort at idle speed	Reference	6.5 N·m (65 kgf·cm, 58 in.·lbf)

SS16Z–08

TORQUE SPECIFICATION

Part tightened	N·m	kgf·cm	ft·lbf
TILT STEERING COLUMN			
Adjusting nut	13	130	9
No. 2 tilt lever lock bolt	5.4	55	48 in.·lbf
Tilt steering support lock nut	9.5	100	87 in.·lbf
Main shaft lower dust seal	4.9	50	43 in.·lbf
Column assembly set bolt and nut	25	260	19
No. 2 intermediate shaft assembly x Main shaft assembly	35	360	26
No. 2 intermediate shaft assembly x Intermediate extension	35	360	26
Shift lock computer sub–assembly	4.0	40	35 in.·lbf
Steering wheel set nut	50	510	37
Steering wheel pad set screw (Torx screw)	8.8	90	78 in.·lbf
POWER STEERING GEAR			
Rack end x Steering rack	62 (83)	630 (850)	46 (61)
Tie rod end lock nut	56	570	41
PS gear assembly set bolt	83	850	61
Stabilizer bar set bolt	19	190	14
Suspension member	137 142	1,400 1,450	101 105
Torque rod set nut	100	1,020	74
EMPS bracket set bolt	5.5	60	52 in.·lbf
Lower suspension arm x Lower ball joint	142	1,450	105
Stabilizer bar link set nut	74	760	55
Tie rod end x Steering knuckle	49	500	36

( ): For use without SST

BODY ELECTRICAL

SS02V–05

SERVICE DATA

DAYTIME RUNNING RELAY (MAIN) (Wire harness side)	
12 – Ground (Ignition switch OFF)	No voltage
12 – Ground (Ignition switch ON)	Battery voltage
9 – Ground (Engine Running)	Battery voltage
3 – Ground (Constant)	Battery voltage
6 – Ground (Constant)	Battery voltage
SPEEDOMETER (ON–VEHICLE)	
Standard indication (mph)	Allowable range (mph)
20	18 – 22
40	38 – 42
60	59 – 63
80	79 – 83
100	99 – 104
120	119 – 125
Standard indication (km/h)	Allowable range (km/h)
20	18 – 22
40	38 – 42
60	58 – 62
80	78 – 82
100	97 – 103
120	117 – 123
140	137 – 143
160	157 – 163
FUEL SENDER GAUGE	
Float position mm (in.)	Resistance (Ω)
F: Approx. 25.2 (0.99)	Approx. 430
1/2: Approx. 92.6 (3.65)	Approx. 1000 – 2000
E: Approx. 169 (6.65)	Approx. 5000
DEFOGER SWITCH (Wire harness side)	
1 – Ground (Ignition switch LOCK or ACC)	No voltage
1 – Ground (Ignition switch ON)	Battery voltage
8 – Ground (Constant)	Battery voltage
WIRELESSS DOOR LOCK CONTROL RECEIVER (Wire harness side)	
5 – Ground (Constant)	Battery voltage
POWER MIRROR SWITCH (Wire harness side)	
8 – Ground (Ignition switch LOCK)	No voltage
8 – Ground (Ignition switch ACC or ON)	Battery voltage
RADIO RECEIVER (Wire harness side)	
3 – Ground (Ignition switch LOCK)	No voltage
3 – Ground (Ignition switch ACC or ON)	Battery voltage
4 – Ground (Constant)	Battery voltage
CENTER CLUSTER SWITCH (Wire harness side)	
1 – Ground (Ignition switch ACC or ON)	Battery voltage

1 – Ground (Ignition switch LOCK)	No voltage
2 – Ground (Constant)	Battery voltage
TRANSPONDER KEY ECU (Wire harness side)	
1 – Ground (Constant)	Battery voltage
2 – Ground (Ignition switch ON)	Battery voltage

BODY

TORQUE SPECIFICATION

SS1HM–01

Part tightened		N·m	kgf·cm	ft·lbf
FRONT BUMPER		–	–	–
Side marker x Bumper		1.7	17	15 in.·lbf
HOOD		–	–	–
Hood x Hinge		13	130	9
Hood lock x Body		8.3	85	74 in.·lbf
FRONT DOOR		–	–	–
Outside view mirror x Door		7.8	80	69 in.·lbf
Window regulator arm x Door		4.9	50	43 in.·lbf
Window regulator body x Door		8.3	85	74 in.·lbf
Door lock x Door	Bolt:	4.9	50	43 in.·lbf
Door lock x Door	Screw:	4.9	50	43 in.·lbf
Outside handle x Door		5.4	55	48 in.·lbf
Hinge x Body		43	440	32 in.·lbf
Hinge x Door		43	440	32 in.·lbf
Door lock striker x Body		23	230	17 in.·lbf
REAR DOOR		–	–	–
Window regulator x Door		5.4	55	48 in.·lbf
Door lock x Door		4.9	50	43 in.·lbf
Outside handle x Body		5.4	55	48 in.·lbf
Hinge x Body		25	260	19
Hinge x Door		30	310	22
Door lock striker x Body		23	230	17
LUGGAGE COMPARTMENT DOOR AND HINGE		–	–	–
Door lock x Door		5.4	55	48 in.·lbf
Hinge x Door		8.3	85	74 in.·lbf
Door lock striker x Body		5.4	55	48 in.·lbf
FRONT WIPER AND WASHER		–	–	–
Wiper arm x Wiper link		26	270	20
Wiper motor x Wiper link	Bolt:	5.4	55	48 in.·lbf
Wiper motor x Wiper link	Nut:	17	175	13
Wiper link x Outer front cowl top panel		7.4	75	65 in.·lbf
Outer front cowl top panel x Body		5.4	55	48 in.·lbf
ROOF HEADLINING		–	–	–
Inner rear view mirror x Body		2.9	30	26 in.·lbf
INSTRUMENT PANEL		–	–	–
Front passenger airbag assembly x Reinforcement		20	204	15
FRONT SEAT		–	–	–
Seat cushion frame x Body		37	380	27
Seatback assembly x Seat cushion frame		43	440	32
REAR SEAT		–	–	–
Seatback assembly x Body		7.9	81	70 in.·lbf

SEAT BELT		–	–	–
Outer belt shoulder anchor x Anchor adjuster		42	430	31
Anchor adjuster x Body		42	430	31
Seat belt floor anchor x Body		42	430	31
Retractor x Body	Upper bolt:	4.9	50	43 in.·lbf
Retractor x Body	Lower bolt:	42	430	31
Inner belt x Seat cushion frame		41	420	30
Rear seat belt retractor x Body		42	430	31
Rear seat inner belt x Body		42	430	31
CRS Tether anchor bracket x Body		20	200	14
CRS Anchor bracket sub–assembly x Body		31	320	23
SPOILER		–	–	–
Rear spoiler x Body		5.0	51	44 in.·lbf

DI00H–16

PRE–CHECK

1. DIAGNOSIS SYSTEM

(a) Description

- When troubleshooting OBDII vehicles, the only difference from the usual troubleshooting procedure is that you connect to the vehicle the OBDII scan tool complying with SAE J1978 or TOYOTA hand–held tester, and read off various data output from the vehicle's ECM.

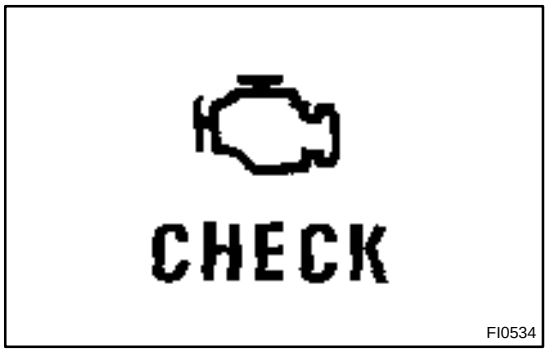

- OBDII regulations require that the vehicle's on–board computer lights up the Malfunction Indicator Lamp (MIL) on the instrument panel when the computer detects a malfunction in the emission control system/components or in the powertrain control components which affect vehicle emissions, or a malfunction in the computer. In addition to the MIL lighting up when a malfunction is detected, the applicable Diagnostic Trouble Code (DTC) prescribed by SAE J2012 are recorded in the ECM memory (See page DI–14).

If the malfunction does not reoccur in 3 consecutive trips, the MIL goes off automatically but the DTCs remain recorded in the ECM memory.

- When DTC P3190, P3191 are detected and the remain of the fuel is little, the computer judges the cause as a fuel shortage, and after the next trip, when the supply of fuel is confirmed, it turns off MIL, but the memory of DTC still remains.

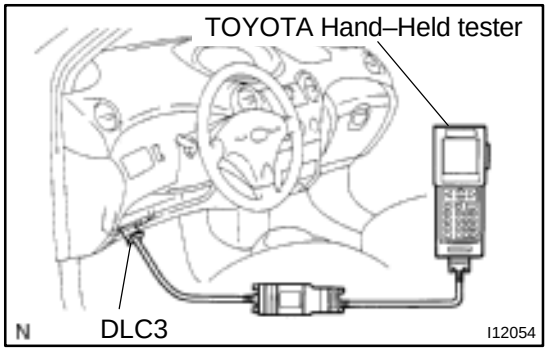

- To check the DTCs, connect the TOYOTA hand–held tester or OBDII scan tool to Data Link Connector 3 (DLC3) on the vehicle. The TOYOTA hand–held tester or OBDII scan tool also enables you to erase the DTCs and check freezed frame data and various forms of engine data. (For operating instructions, see the OBDII scan tool's instruction book.)
- DTCs include SAE controlled codes and manufacturer controlled codes. SAE controlled codes must be set as prescribed by the SAE, while manufacturer controlled codes can be set freely by the manufacturer within the prescribed limits (See DTC chart on page DI–14).

- The diagnosis system operates in normal mode during normal vehicle use. It also has a check mode for technicians to simulate malfunction symptoms and troubleshoot. Most DTCs use 2 trip detection logic* to prevent erroneous detection, and ensure thorough malfunction detection. By switching the ECM to check mode when troubleshooting, the technician can cause the MIL to light up for a malfunction that is only detected once or momentarily (TOYOTA hand–held tester only). (See step 2)
- *2 trip detection logic:
  When a malfunction is first detected, the malfunction is temporarily stored in the ECM memory (1st trip).

If the same malfunction is first detected again during the second drive test, this second detection causes the MIL to light up (2nd trip). (However, the IG switch must be turned OFF between the 1st trip and the 2nd trip.)

- Freeze frame data:
  Freeze frame data records the engine condition when a misfire (DTC P0300 – P0304) or fuel trim malfunction (DTC P0171, P0172) or other malfunction (first malfunction only), is detected.
- Because freeze frame data records the engine conditions (fuel system, calculated load, engine coolant temperature, fuel trim,engine speed, vehicle speed, etc.) when the malfunction is detected, when troubleshooting it is useful for determining whether the vehicle was running or stopped, the engine warmed up or not, the air–fuel ratio lean or rich, etc. at the time of the malfunction.

Priorities for troubleshooting:

If troubleshooting priorities for multiple DTCs are given in the applicable DTC chart, these should be followed.

If no instructions are given troubleshoot DTCs according to the following priorities.

(1) DTCs other than fuel trim malfunction (DTC P0171, P0172), and misfire (DTC P0300 – P0304).
(2) Fuel trim malfunction (DTC P0171, P0172).
(3) Misfire (DTC P0300 – P0304).

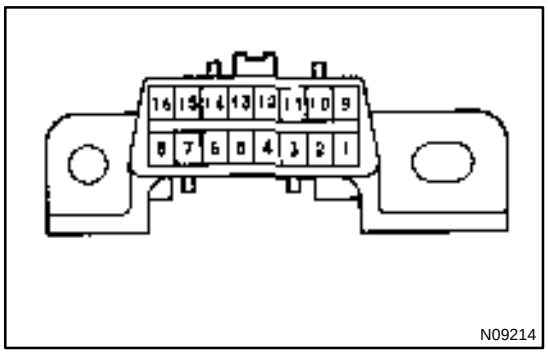

(b) Check the DLC3.
The vehicle's ECM uses ISO 9141–2 for communication. The terminal arrangement of DLC3 complies with SAE J1962 and matches the ISO 9141–2 format.

Terminal No.	Connection / Voltage or Resistance	Condition
7	Bus ⊕ Line / Pulse generation	During transmission
4	Chassis Ground / ↔ Body Ground 1 Ω or less	Always
5	Signal Ground / ↔ Body Ground 1 Ω or less	Always
16	Battery Positive / ↔ Body Ground 9 – 14 V	Always

HINT:
If your display shows "UNABLE TO CONNECT TO VEHICLE" when you have connected the cable of the TOYOTA hand–held tester or OBDII scan tool to DLC3, turned the ignition switch ON and operated the scan tool, there is a problem on the vehicle side or tool side.

- If communication is normal when the tool is connected to another vehicle, inspect DLC3 on the original vehicle.
- If communication is still not possible when the tool is connected to another vehicle, the problem is probably in the tool itself, so consult the Service Department listed in the tool's instruction manual.

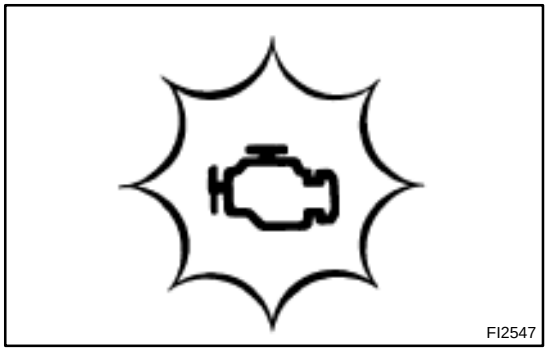

2. INSPECT DIAGNOSIS (Normal Mode)

(a) Check the MIL
(1) The MIL comes on when the ignition switch is turned ON and the engine is not running.

HINT:
If the MIL does not light up, troubleshoot the combination meter (See page BE–42).

(2) When the engine started, the MIL should go off. If the lamp remains on, the diagnosis system has detected a malfunction or abnormality in the system.

(b) Check the DTC.

NOTICE:

- **If there is no DTC in the normal mode, check the 1st trip DTC using Continuous Test Result function (Mode 7 for SAE J1979) or the TOYOTA hand–held tester or OBDII scan tool.**

- **TOYOTA hand–held tester only:**
  When the diagnosis system is switched from normal mode to check mode, it erases all DTCs and freezed frame data recorded in normal mode. So before switching modes, always check the DTCs and freezed frame data, and note them down.
  (1) Prepare the TOYOTA hand–held tester or OBDII scan tool (complying with SAE J1978).
  (2) Connect the TOYOTA hand–held tester or OBDII scan tool to DLC3 under the instrument panel lower pad.
  (3) Turn the ignition switch ON and turn the TOYOTA hand–held tester or OBDII scan tool switch ON.
  (4) Use the TOYOTA hand–held tester or OBDII scan tool to check the DTCs and freezed frame data; note them down. (For operating instructions, see the OBDII scan tool's instruction book.)
  (5) See step 4 to confirm the details of the DTCs.

NOTICE:

- **When simulating symptoms with an OBDII scan tool (excluding TOYOTA hand–held tester) to check the DTCs, use normal mode. For code on the DTC chart subject to "2 trip detection logic", perform the following either action.**
- **Turn the ignition switch OFF after the symptom is simulated the first time. Then repeat the simulation process again. When the problem has been simulated twice, the MIL lights up and the DTCs are recorded in the ECM.**
- **Check the 1st trip DTC using Mode 7 (Continuous Test Results) for SAE J1979.**

(c) Clear the DTC.
The DTCs and freezed frame data will be erased by either action.
  (1) Operating the TOYOTA hand–held tester or OBDII scan tool (complying with SAE J1978) to erase the codes. (See the OBDII scan tool's instruction book for operating instructions.)
  (2) Disconnecting the battery terminals or EFI fuse.

NOTICE:
If the TOYOTA hand–held tester switches the ECM from the normal mode to the check mode or vice–versa, or if the ignition switch is turned from ON to ACC or OFF during check mode, the DTCs and freezed frame data will be erased.

3. INSPECT DIAGNOSIS (Check Mode)

TOYOTA hand–held tester only:

Compared to the normal mode, the check mode has an increased sensitivity to detect malfunctions.

Furthermore, the same diagnostic items which are detected in the normal mode can also be detected in the check mode.

(a) Check the DTC

(1) Initial conditions:

- Battery positive voltage 11 V or more.
- Throttle valve fully closed.
- Transmission in ”P” or ”N” position.
- A/C switched OFF.

(2) Turn the ignition switch OFF.

(3) Prepare the TOYOTA hand–held tester.

(4) Connect the TOYOTA hand–held tester to DLC3 under the instrument panel lower pad.

(5) Turn the ignition switch ON and switch the TOYOTA hand–held tester ON.

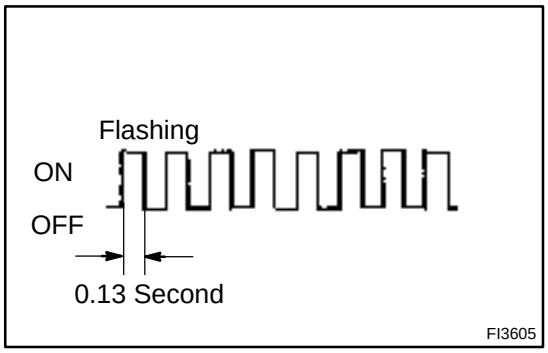

(6) Switch the TOYOTA hand–held tester normal mode to check mode. (Check that the MIL flashes.)

NOTICE:

If the TOYOTA hand–held tester switches the ECM from the normal mode to the check mode or vice–versa, or if the ignition switch is turned from ON to ACC or LOCK during check mode, the DTCs and freezed frame data will be erased.

(7) Switch the engine. (The MIL goes out after the engine start.)

(8) Simulate the conditions of the malfunction described by the customer.

NOTICE:

Leave the ignition switch ON until you have checked the DTC, etc.

(9) After simulating the malfunction conditions, use the TOYOTA hand–held tester diagnosis selector to check the DTCs and freezed frame data, etc.

HINT:

Take care not to turn the ignition switch OFF. Turning the ignition switch OFF switches the diagnosis system from check mode to normal mode. so all DTCs, etc. are erased.

(10) After checking the DTC, inspect the applicable circuit.

4. FAIL–SAFE CHART

If any of the following codes is recorded, the ECM enters fail–safe mode.

DTC No.	Fail–Safe Operation	Fail–Safe Deactivation Conditions
P0100	Ignition timing fixed at 5° BTDC	Returned to normal condition
P0110	Intake air temp. is fixed at 20°C (68°F)	Returned to normal condition
P0115	Engine coolant temp. is fixed at 80°C (176°F)	Returned to normal condition
P0120	VTA is fixed at 0°	The following condition must be repeated at least 2 times consecutively 0.1 V ≦ VTA ≦ 0.95 V
P0135 P0141	The heater circuit in which an abnormality is detected is turned off	Ignition switch OFF
P0325	Max. timing retardation	Ignition switch OFF
P1300 P1305 P1310 P1315	Fuel cut	IGF signal is detected for 2 consecutive ignitions

5. CHECK FOR INTERMITTENT PROBLEMS

TOYOTA hand–held tester only:

By putting the vehicle's ECM in check mode, 1 trip detection logic is possible instead of 2 trip detection logic and sensitivity to detect open circuits is increased. This makes it easier to detect intermittent problems.

(1) Clear the DTC (See step 3).
(2) Set the check mode (See step 3).
(3) Perform a simulation test (See page IN–30).
(4) Check the connector and terminal (See page IN–41).
(5) Handle the connector (See page IN–41).

6. BASIC INSPECTION

When the malfunction code is not confirmed in the DTC check, troubleshooting should be performed in the order for all possible circuits to be considered as the causes of the problems. In many cases, by carrying out the basic engine check shown in the following flow chart, the location causing the problem can be found quickly and efficiently. Therefore, use of this check is essential in engine troubleshooting.

1	**Is battery positive voltage 11 V or more when engine is stopped?**

NO → **Charge or replace battery.**

YES

2	**Does engine start?**

NO → **Go to step 6.**

YES

3	Check air filter.

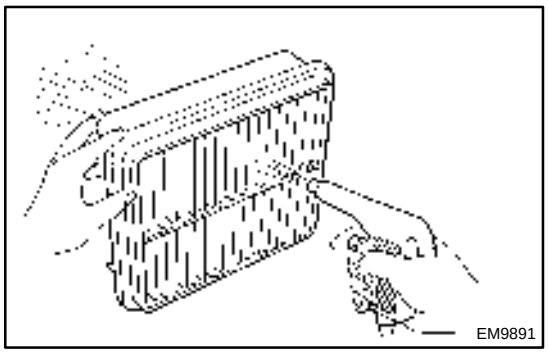

PREPARATION:
Remove the air filter.
CHECK:
Visual check that the air filter is not dirty or excessive oily.
HINT:
If necessary, clean the air filter with compressed air. First blow from inside thoroughly, then blow from outside of the air filter.

NG → **Repair or replace.**

OK

4	Check engine idle speed.

PREPARATION:
(a) Warm up engine to normal operating temperature.
(b) Switch off all accessories.
(c) Switch off A/C.
(d) Shift transmission into P position.
(e) Connect the TOYOTA hand–held tester or OBDII scan tool to DLC3 on the vehicle.
(f) Transit to inspection mode.

CHECK:
Use CURRENT DATA to check the idle speed.

OK:
Idle speed: 950 – 1,050 rpm

NG → **Proceed to problem symptoms table on page DI–22.**

OK

5	Check ignition timing.

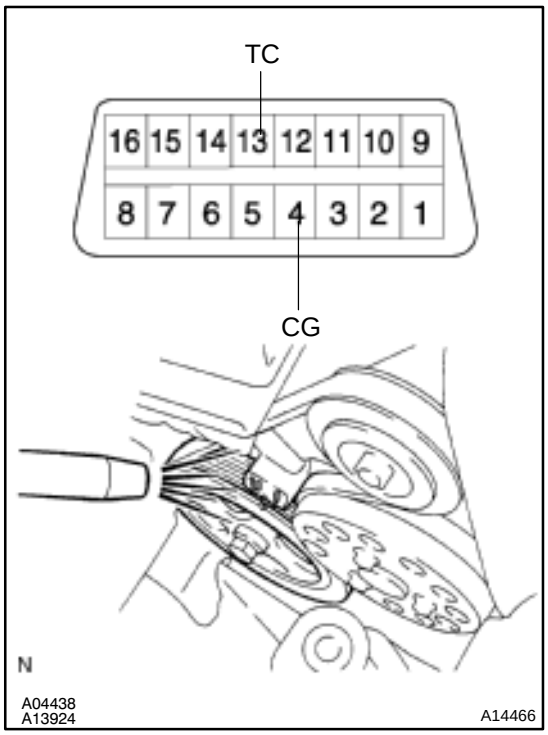

PREPARATION:

(a) Warm up engine to normal operating temperature.
(b) Shift transmission into P position.
(c) Keep the engine speed at idle.
(d) Using SST, connect terminals TE1 and E1 of DLC1.
SST 09843–18020
(e) Using a timing light, connect the tester to the ignition coil connector wire (See page EM–11).
(f) Transit to inspection mode.

CHECK:

Check ignition timing.

OK:

Ignition timing: 7 – 15° BTDC at idle

NG → **Proceed to page IG–1 and continue to trouble-shoot.**

OK

Proceed to problem symptoms table on page DI–22.

6	Check fuel pressure.

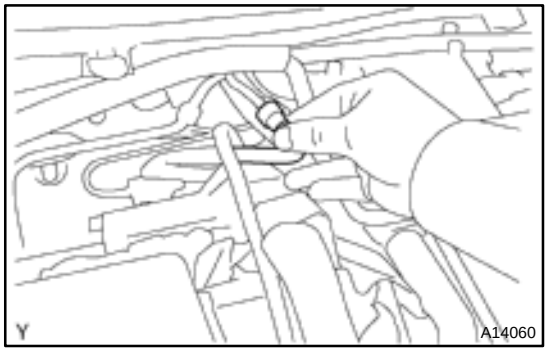

PREPARATION:

(a) Be sure that enough fuel is in the tank.
(b) Connect the TOYOTA hand–held tester to the DLC3.
(c) Turn the ignition switch ON and push the TOYOTA hand–held tester main switch ON.
(d) Use the ACTIVE TEST mode to operate the fuel pump.
(e) Please refer to the TOYOTA hand–held tester operator's manual for further details.
(f) If you have no TOYOTA hand–held tester, connect the positive (+) and negative (–) leads from the battery to the fuel pump connector (See page SF–6).

CHECK:

Check for fuel pressure in the fuel inlet hose when it is pinched off.

HINT:

At this time, you will hear a fuel flowing noise.

NG → **Proceed to page SF–6 and continue to trouble-shoot.**

OK

7	**Check for spark.**

PREPARATION:

(a) Remove the ignition coil (See page IG–5).
(b) Remove the spark plug.
(c) Install the spark plug to ignition coil and connect the ignition coil connector to ignition coil.
(d) Disconnect the injector connector.
(e) Be sure to ground the screw of the spark plug securely.

CHECK:

Check if spark occurs while engine is being cranked.

NOTICE:

- **Do not crash the electrode gap.**
- **To prevent excess fuel being injected from the injectors during this test, don't crank the engine for more than 5 – 10 seconds at a time.**

NG → **Proceed to page IG–1 and continue to trouble-shoot.**

OK

Proceed to problem symptoms table on page DI–22.

7. ENGINE OPERATING CONDITION

NOTICE:

The values given below for "Normal Condition" are representative values, so a vehicle may still be normal even if its value varies from those listed here. So do not decide whether a part is faulty or not solely according to the "Normal Condition" here.

(a) CARB mandated signals.

TOYOTA hand–held tester display	Measurement Item	Normal Condition*
FUEL SYS #1	Fuel System Bank 1 OPEN: Air–fuel ratio feedback stopped CLOSED: Air–fuel ratio feedback operating	Idling after warming up: CLOSED
CALC LOAD	Calculator Load: Current intake air volume as a proportion of max. intake air volume	Idling: 5.4 – 19.2 % Racing without load (2,250rpm): 6.9 – 16.2 %
COOLANT TEMP.	Engine Coolant Temp. Sensor Value	After warming up: 80 – 95°C (176 – 203°F)
SHORT FT #1	Short–term Fuel Trim Bank 1	0 ± 20%
LONG FT #1	Long–term Fuel Trim Bank 1	0 ± 20%
ENGINE SPD	Engine Speed	Idling: 1,000 rpm
VEHICLE SPD	Vehicle Speed	Vehicle Stopped: 0 km/h (0 mph)
IGN ADVANCE	Ignition Advance: Ignition Timing of Cylinder No. 1	Idling: BTDC 7 – 15°
INTAKE AIR	Intake Air Temp. Sensor Value	Equivalent to Ambient Temp.
MAF/AFM	Air Flow Rate Through Mass Flow Meter	Idling: 1.11 – 4.38 gm/sec. Racing without load (2,250 rpm): 3.38 – 7.88 gm/sec.
THROTTLE POS	Voltage Output of Throttle Position Sensor Calculated as a percentage: 0 V → 0%, 5 V → 100%	Throttle Fully Closed: 0 – 5 % Throttle Fully Open: 90 – 100 %
O2S B1, S1	Voltage Output of Heated Oxygen Sensor Bank 1, Sensor 1	Idling: 0.1 – 0.9 V
O2FT B1, S1	Heated Oxygen Sensor Fuel Trim Bank 1, Sensor 1 (Same as SHORT FT #1)	0 ± 20 %
O2S B1, S2	Voltage Output of Heated Oxygen Sensor Bank 1, Sensor 2	Driving at 50 km/h (31 mph): 0.1 – 0.9 V

*: If no conditions are specifically stated for "Idling", it means the shift lever is at P position, the A/C switch is OFF and all accessory switches are OFF.

(b) TOYOTA Enhanced Signals.

TOYOTA hand–held tester display	Measurement Item	Normal Condition*
MISFIRE RPM	Engine RPM for first misfire range	Misfire 0: 0 rpm
MISFIRE LOAD	Engine load for first misfire range	Misfire 0: 0 g/r
INJECTOR	Fuel injection time for cylinder No.1	Idling: 1.0 – 3.0 ms
CYL#1, CYL#2, CYL#3, CYL#4	Abnormal revolution variation for each cylinder	0 %
IGNITION	Total number of ignition for every 1,000 revolutions	0 – 2,000
FUEL PUMP	Fuel Pump Signal	Idling: ON
EVAP (PURGE) VSV	EVAP VSV Signal	VSV operating: ON
VAPOR PRESS VSV	Vapor Pressure VSV Signal	VSV operating: ON
TOTAL FT B1	Total Fuel Trim Bank 1: Average value for fuel trim system of bank 1	Idling: 0.8 – 1.2 V

O2 LR B1, S1 *	Heated Oxygen Sensor Lean Rich Bank 1, Sensor 1 Response time for oxygen sensor output to switch from lean to rich	Idling after warmed up: 0 – 1,000 msec.
O2 RL B1, S1 *	Heated Oxygen Sensor Rich Lean Bank 1, Sensor 1 Response time for oxygen sensor output to switch from rich to lean	Idling after warmed up: 0 – 1,000 msec.

*: If no conditions are specifically stated for ”ldling”, it means the shift lever is at P position, the A/C switch is OFF and all accessory switches are OFF.

DI6UT–02

DIAGNOSTIC TROUBLE CODE CHART

HINT:

- Parameters listed in the chart may not be exactly the same as your reading due to the type of instrument or other factors.
  If a malfunction code is displayed during the DTC check in check mode, check the circuit for that code listed in the table below. For details of each code, turn to the page referred to under the ''See page '' for the respective ''DTC No.'' in the DTC chart.
- When the ignition switch is ON and "READY" indicator light is OFF, the bulb check of the "MIL" is performed ("MIL" is ON).
  When "MIL" is ON, but the DTC of the engine is not memorized, it may be because of HV control system abnormality, so check HV control system beforehand.

SAE CONTROLLED:

DTC No.	Detection Item	Trouble Area	MIL*1	Memory
P0100 (DI–23)	Mass Air Flow Circuit Malfunction	• Open or short in mass air flow meter circuit • Mass air flow meter • ECM	○	○
P0101 (DI–27)	Mass Air Flow Circuit Range/Performance Problem	• Mass air flow meter	○	○
P0110 (DI–28)	Intake Air Temp. Circuit Malfunction	• Open or short in intake air temp. sensor circuit • Intake air temp. sensor (built into mass air flow meter) • ECM	○	○
P0115 (DI–32)	Engine Coolant Temp. Circuit Malfunction	• Open or short in engine coolant temp. sensor circuit • Engine coolant temp. sensor • ECM	○	○
P0116 (DI–36)	Engine Coolant Temp. Circuit Range/Performance Problem	• Cooling system • Engine coolant temp. sensor	○	○
P0120 (DI–38)	Throttle/Pedal Position Sensor/Switch "A" Circuit Malfunction	• Open or short in throttle position sensor circuit • Throttle position sensor • ECM	○	○
P0121 (DI–43)	Throttle/Pedal Position Sensor/Switch "A" Circuit Range/Performance Problem	• Throttle position sensor • ECM	○	○
P0125 (DI–44)	Insufficient Coolant Temp. for Closed Loop Fuel Control	• Open or short in heated oxygen sensor (bank 1 sensor 1) circuit • Heated oxygen sensor (bank 1 sensor 1) • Air induction system • Fuel pressure • Injector • Gas leakage on exhaust system • ECM	○	○
P0128 (DI–49)	Thermostat Malfunction	• Thermostat • Cooling system • Water temperature • ECM	○	○
P0130 (DI–50)	Heated Oxygen Sensor Circuit Malfunction (Bank 1 Sensor 1) (Except Calif.)	• Open or short in heated oxygen sensor circuit • Heated oxygen sensor • Air induction system • EGR system • Fuel pressure • Injector • ECM	○	○

P0133 (DI–54)	Oxygen Sensor Circuit Slow Response (Bank 1 Sensor 1)	• Open or short in heated oxygen sensor circuit • Heated oxygen sensor • Air induction system • EGR system • Fuel pressure • Injector • ECM	○	○
P0135 (DI–57)	Oxygen Sensor Heater Circuit Malfunction (Bank 1 Sensor 1)	• Open or short in heater circuit of heated oxygen sensor • Heated oxygen sensor heater • ECM	○	○
P0136 (DI–59)	Oxygen Sensor Circuit Malfunction (Bank 1 Sensor 2)	• Open or short in heated oxygen sensor circuit • Heated oxygen sensor	○	○
P0141 (DI–57)	Oxygen Sensor Heater Circuit Malfunction (Bank 1 Sensor 2)	• Same as DTC No. P0135	○	○
P0171 (DI–61)	System too Lean (Fuel Trim)	• Air induction system • Injector blockage • Mass air flow meter • Engine coolant temp. sensor • Fuel pressure • Gas leakage on exhaust system • Open or short in heated oxygen sensor (bank 1 sensor 1) circuit • Heated oxygen sensor (bank 1 sensor 1)	○	○
P0172 (DI–61)	System too Rich (Fuel Trim)	• Injector leak, blockage • Mass air flow meter • Engine coolant temp. sensor • Ignition system • Fuel pressure • Gas leakage on exhaust system • Open or short in heated oxygen sensor (bank 1, 2 sensor 1) circuit • Heated oxygen sensor (bank 1, 2 sensor 1) • ECM	○	○
P0300 (DI–65)	Random/Multiple Cylinder Misfire Detected	• Open or short in engine wire • Connector connection • Vacuum hose connection • Ignition system • Injector • Fuel pressure • EGR system • Manifold absolute pressure sensor • Engine coolant temp. sensor • Compression pressure • Valve clearance • Valve timing • ECM	○	○
P0301 (DI–65)	Cylinder 1 Misfire Detected			
P0302 (DI–65)	Cylinder 2 Misfire Detected			
P0303 (DI–65)	Cylinder 3 Misfire Detected			
P0304 (DI–65)	Cylinder 4 Misfire Detected			
P0325 (DI–71)	Knock Sensor 1 Circuit Malfunction (Bank 1)	• Open or short in knock sensor 1 circuit • Knock sensor 1 (looseness) • ECM	○	○
P0335 (DI–74)	Crankshaft Position Sensor ”A” Circuit Malfunction	• Open or short in crankshaft position sensor circuit • Crankshaft position sensor • Signal plate (Timing belt guide) • Crankshaft timing pulley • ECM	○	○

P0340 (DI–76)	Camshaft Position Sensor Circuit Malfunction	• Open or short in camshaft position sensor circuit • Camshaft position sensor • Camshaft timing pulley • ECM	○	○
P0420 (DI–78)	Catalyst System Efficiency Below Threshold (Bank 1)	• Gas leakage on exhaust system • Open or short in heated oxygen sensor circuit • Heated oxygen sensor • Three–way catalytic converter	○	○
P0440 (DI–81)	Evaporative Emission Control System Malfunction	• Hose or tube cracked, hole, damaged or loose seal • Fuel tank cap incorrectly installed • Fuel tank cap cracked or damaged • Vacuum hose cracked, hole, blocked,damaged or disconnected • Fuel tank cracked, hole or damaged • Charcoal canister cracked, hole or damaged • Open or short in vapor pressure sensor circuit • Vapor pressure sensor • Fuel tank over fill check valve cracked or damaged • ECM	○	○
P0441 (DI–87)	Evaporative Emission Control System Incorrect Purge Flow	• Vacuum hose cracked, hole, blocked damaged or disconnected • Open or short in vapor pressure sensor circuit • Vapor pressure sensor • Open or short in VSV circuit for EVAP • VSV for EVAP • Open or short in VSV circuit for vapor pressure sensor • VSV for vapor pressure sensor • Charcoal canister cracked, hole or damaged • Fuel tank over fill check valve cracked or damaged • ECM	○	○
P0446 (DI–87)	Evaporative Emission Control System Vent Control Malfunction			
P0450 (DI–103)	Evaporative Emission Control System Pressure Sensor Malfunction	• Open or short in vapor pressure sensor circuit • Vapor pressure sensor • ECM	○	○
P0451 (DI–103)	Evaporative Emission Control System Pressure Sensor Range/ Performance			
P0500 (DI–105)	Vehicle Speed Sensor Malfunction	• Combination meter • Open or short in vehicle speed sensor circuit • Vehicle speed sensor • ECM	○	○
P0505 (DI–107)	Idle Control System Malfunction	• Erectric throttle control system • Air induction system	○	○

*1: ○ · · · MIL lights up

MANUFACTURER CONTROLLED:

DTC No. (See Page)	Detection Item	Trouble Area	MIL*1	Memory
P1125 (DI–108)	Throttle Control Motor Circuit Malfunction	• Open or short in throttle control motor circuit • Throttle control motor • ECM	○	○
P1127 (DI–110)	ETCS Actuator Power Source Circuit Malfunction	• Open in ETCS power source circuit • ECM	○	○
P1128 (DI–112)	Throttle Control Motor Lock Malfunction	• Throttle control motor • Throttle body	○	○
P1129 (DI–114)	Electric Throttle Control System Malfunction	• Electric throttle control system • ECM	○	○
P1300 (DI–115)	Igniter Circuit Malfunction (No.1)	• Ignition system • Open or short in IGF1 and IGT1 circuit from No.1 ignition coil with igniter to ECM • No.1 ignition coil with igniter • ECM	○	○
P1305 (DI–115)	Igniter Circuit Malfunction (No.2)	• Ignition system • Open or short in IGF2 and IGT2 circuit from No.2 ignition coil with igniter to ECM • No.2 ignition coil with igniter • ECM	○	○
P1310 (DI–115)	Igniter Circuit Malfunction (No.3)	• Ignition system • Open or short in IGF2 and IGT3 circuit from No.3 ignition coil with igniter to ECM • No.3 ignition coil with igniter • ECM	○	○
P1315 (DI–115)	Igniter Circuit Malfunction (No.4)	• Ignition system • Open or short in IGF1 and IGT4 circuit from No.4 ignition coil with igniter to ECM • No.4 ignition coil with igniter • ECM	○	○
P1346 (DI–120)	VVT Sensor/Camshaft Position Sensor Circuit Range/Performance Problem (Bank 1)	• Mechanical system (Jumping teeth of timing belt, belt stretched) • ECM	○	○
P1349 (DI–121)	VVT System Malfunction (Bank 1)	• Valve timing • OCV • VVT controller assembly • ECM	○	○
P1430 (DI–127)	Vacuum Sensor for Adsorber and Catalyst System Circuit Malfunction	• Open or short circuit in vacuum sensor circuit • Vacuum sensor for HC adsorber and catalyst system • ECM	○	○
P1431 (DI–131)	Vacuum Sensor for Adsorber and Catalyst System CIrcuit Rangel Performance Problem	• Vacuum sensor for HC adsorber and catalyst system • Vacuum line	○	○
P1436 (DI–133)	Variable Value Malfunction	• Vacuum line • Actuator for HC adsorber and catalyst system • Front exhaust pipe	○	○
P1437 (DI–135)	Vacuum Line Malfunction	• Vacuum line • VSV for HC adsorber and catalyst system • Check valve	○	○

P1455 (DI–140)	Vapor Reducing Fuel Tank System Leak Detected (Small Leak)	• Hose and pipe • Heated oxygen sensor • Fuel system • VVT system • Ignition system • Mass air flow meter • ECM	○	○
P1525 (DI–141)	Resolver Circuit Malfunction	• HV ECU • Engine ECU	–	○
P1600 (DI–143)	ECM BATT Malfunction	• Open in back up power source circuit • ECM	○	○
P1633 (DI–145)	ECU Malfunction (ETCS Circuit)	• ECM	○	○
P1636 (DI–146)	HV ECU Malfunction	• HV ECU • Engine ECU	○	○
P1637 (DI–148)	EGSTP Signal Malfunction	• HV ECU • Engine ECU	–	○
P1656 (DI–150)	OCV Circuit Malfunction (for VVT–i)	• Open or short in OCV circuit • OCV • ECM	○	○
P3190 (DI–153)	Poor Engine Power	• Air induction system • Throttle body • Fuel pressure • Engine • Mass air flow meter • Out of fuel • Engine coolant temp. sensor • Crankshaft position sensor • Camshaft position sensor • ECM	○	○
P3191 (DI–153)	Engine dose not start			

*1: ○ · · · MIL lights up

DI7SS–01

TERMINALS OF ECM

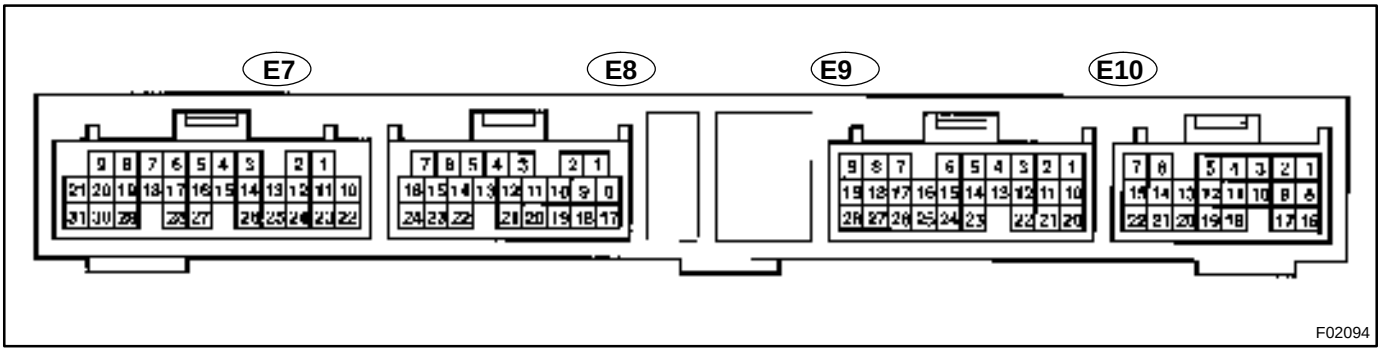

Symbols (Terminal No.)	Wiring Color	Condition	STD Voltage (V)
BATT (E8 – 3) – E1 (E8 – 17)	R–W ↔ BR	Always	9 – 14
+B (E8 – 4) – E1 (E8 – 17)	B ↔ BR	IG switch ON	9 – 14
+BM (E7 – 6) – E1 (E8 – 17)	GR ↔ BR	Always	9 – 14
IGSW(E10 – 9) – E1(E8 – 17)	B–W ↔ BR	IG switch ON	9 – 14
MREL (E9 – 25) – E1(E8 – 17)	G–R ↔ BR	IG switch ON	9 – 14
VC (E8 – 2) – E2 (E8 – 18)	Y–R ↔ BR	IG switch ON	4.5 – 5.5
VTA (E8 – 23) – E2 (E8 – 18)	P ↔ BR	IG switch ON Throttle valve fully closed	0.4 – 1.0
		IG switch ON Throttle valve fully open	3.2 – 4.8
VTA2 (E8 – 21) – E2 (E8 – 18)	L ↔ BR	IG switch ON Accelerator pedal released	2.0 – 2.9
		IG switch ON Accelerator pedal depressed	4.6 – 5.1
VG (E8 – 10) – EVG (E8 – 19)	G ↔ R	Idling, A/C switch OFF, Shift position in N or P position	0.5 – 3.0
THA (E8 – 22) – E2 (E8 – 18)	R–B ↔ BR	Idling, Intake air temp. 20˚C (68˚F)	0.5 – 3.4
THW (E8 – 14) – E2 (E8 – 18)	W ↔ BR	Idling, Engine coolant temp. 80˚C (176˚F)	0.2 – 1.0
#10 (E8 – 5) – E01 (E7 – 21)	Y ↔ W–B	IG switch ON	9 – 14
		Idling	Pulse generation (See page DI–65)
#20 (E8 – 6) – E01 (E7 – 21)	B–R ↔ W–B	IG switch ON	9 – 14
		Idling	Pulse generation (See page DI–65)
#30 (E7 – 1) – E01 (E7 – 21)	L–W ↔ W–B	IG switch ON	9 – 14
		Idling	Pulse generation (See page DI–65)
#40 (E7 – 2) – E01 (E7 – 21)	R–W ↔ W–B	IG switch ON	9 – 14
		Idling	Pulse generation (See page DI–65)
IGT1 (E7 – 11) – E1 (E8 – 17)	Y–G ↔ BR	Idling	Pulse generation (See page DI–115)
IGT2 (E7 – 12) – E1 (E8 – 17)	W ↔ BR	Idling	Pulse generation (See page DI–115)
IGT3 (E7 – 13) – E1 (E8 – 17)	G ↔ BR	Idling	Pulse generation (See page DI–115)

IGT4 (E7 – 14) – E1 (E8 – 17)	Y ↔ BR	Idling	Pulse generation (See page DI–115)
IGF (E7 – 25) – E1 (E8 – 17)	B–R ↔ BR	IG switch ON	4.5 – 5.5
		Idling	Pulse generation (See page DI–115)
G2 (E7 – 10) – NE⊖ (E8 – 24)	R ↔ G	Idling	Pulse generation (See page DI–74)
NE+ (E8 – 16) – NE– (E8 – 24)	R ↔ G	Idling	Pulse generation (See page DI–74)
FC (E8 – 9) – E01 (E7 – 21)	G–R ↔ W–B	IG switch ON	9 – 14
EVP1 (E7 – 29) – E1 (E8 – 17)	R–L ↔ BR	IG switch ON	9 – 14
OX1A (E10 – 12) – E2 (E8 – 18)	W ↔ BR	Maintain engine speed at 2,500 rpm for 2 min. after warming up	Pulse generation (See page DI–44)
OX1B (E10 – 11) – E2 (E8 – 18)	Y ↔ BR	Maintain engine speed at 2,500 rpm for 2 min. after warming up	Pulse generation (See page DI–44)
HT1A (E10 – 1) – E1 (E8 – 17)	P–L ↔ BR	Idling	Below 3.0
		IG switch ON	9 – 14
HT1B (E10 – 7) – E1 (E8 – 17)	G–Y ↔ BR	Idling	Below 3.0
		IG switch ON	9 – 14
KNK1 (E7 – 28) – E2 (E8 – 18)	B ↔ BR	Idling	Pulse generation (See page DI–71)
SPD (E10 – 5) – E1 (E8 – 17)	V–W ↔ BR	IG switch ON Rotate driving wheel slowly	Pulse generation
SPHV (E9 – 10) – E1 (E8 – 17)	O ↔ BR	IG switch ON Rotate driving wheel slowly	Pulse generation (See page DI–105)
ESTP (E9 – 16) – E1 (E8 – 17)	R–Y ↔ BR	Idling	9 – 14
TAM (E9 – 23) – E2 (E8 – 18)	W–G ↔ BR	Outer air temp. –30 – 50°C	0.7 – 3.2
W (E10 – 6) – E1 (E8 – 17)	G–R ↔ BR	Idling	9 – 14
		IG switch ON	Below 3.0
ACT (E10 – 22) – E1 (E8 – 17)	P–G ↔ BR	A/C switch OFF	Below 2.0
		A/C switch ON at idling	9 – 14
OCV+ (E7 – 23) – OCV – (E7 – 24)	Y–R ↔ W–G	IG switch ON	Pulse generation (See page DI–121)
M+ (E7 – 8) – E1 (E8 – 17) M– (E7 – 7) – E1 (E8 – 17)	L ↔ BR P ↔ BR	Idling	Pulse generation (See page DI–108)
TC (E9 – 6) – E1 (E8 – 17)	P–B ↔ BR	IG switch ON	9 – 14
HCC (E9 – 20) – E1 (E8 – 17)	B–W ↔ BR	IG switch ON	9 – 14
PTNK (E9 – 22) – E1 (E8 – 17)	L–R ↔ BR	IG switch ON	9 – 14
		Apply vacuum 4.0 kPa (30 mmHg, 1.2 in.Hg)	Below 0.5
HCLS (E9 – 14) – E1 (E8 – 17)	V–W ↔ BR	IG switch ON	3.3 – 3.9
		Apply vacuum 67 kPa (500 mmHg, 19.7 in.Hg)	1.3 – 1.9

DI6UV–03

CIRCUIT INSPECTION

DTC	P0100	Mass Air Flow Circuit Malfunction

CIRCUIT DESCRIPTION

The mass air flow meter uses a platinum hot wire. The hot wire air flow meter consists of a platinum hot wire, temparature sensor and a control circuit installed in a plastic housing. The hot wire air flow meter works on the principle that the hot wire and temparature sensor located in the intake air bypass of the housing detect any changes in the intake air temp.
The hot wire is maintained at the set temp. by controlling the current flow through the hot wire. This current flow is then measured as the output voltage of the air flow meter.
The circuit is constructed so that the platinum hot wire and temparature sensor provide a bridge circuit,with the power transistor controlled so that the potential of A and B remains equal to maintain the set temp.

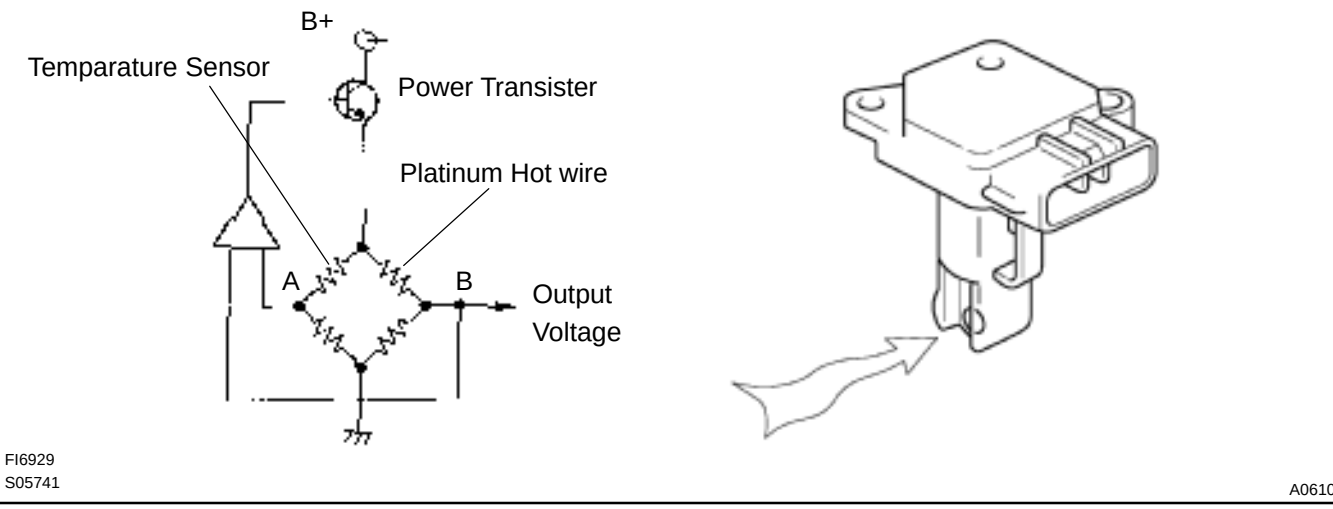

DTC No.	DTC Detecting Condition	Trouble Area
P0100	Open or short in mass air flow meter circuit with more than 3 sec. engine speed 3,000 rpm or less	• Open or short in mass air flow meter circuit • Mass air flow meter • ECM

If the ECM detects DTC ”P0100” it operates the fail–safe function, keeping the ignition timing and injection volume constant and making it possible to drive the vehicle.
HINT:
After confirming DTC P0100 use the OBD II scan tool or TOYOTA hand–held tester to confirm the mass air flow ratio from ”CURRENT DATA”.

Mass Air Flow Value (gm/sec.)	Malfunction
0.0	• Mass air flow meter power source circuit open • VG circuit open or short
271.0 or more	• E2G circuit open

WIRING DIAGRAM

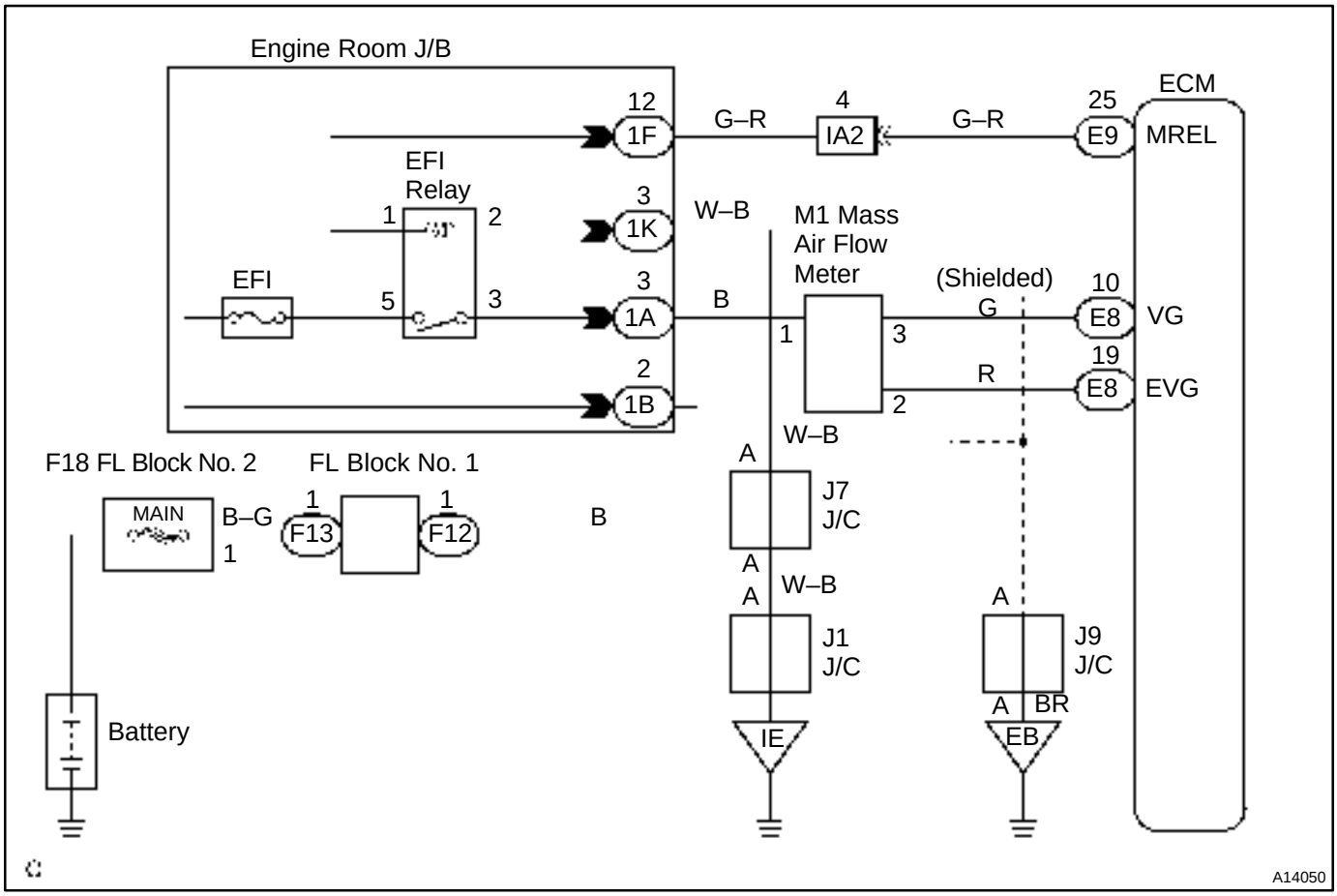

INSPECTION PROCEDURE

HINT:

Read freeze frame data using TOYOTA hand–held tester or OBD II scan tool. Because freeze frame records the engine conditions when the malfunction is detected, when troubleshooting it is useful for determining whether the vehicle was running or stopped, the engine warmed up or not, the air–fuel ratio lean or rich, etc. at the time of the malfunction.

1	**Connect OBD II scan tool or TOYOTA hand–held tester, and read value of mass air flow rate.**

PREPARATION:

(a) Connect the OBD II scan tool or TOYOTA hand–held tester to the DLC3.
(b) Turn ignition switch ON and push the OBD II scan tool or TOYOTA hand–held tester main switch ON.
(c) Start the engine.

CHECK:

Read mass air flow rate on the OBD II scan tool or TOYOTA hand–held tester.

RESULT:

	Type I	Type II
Mass air flow rate (gm/sec.)	0.0	271.0 or more

Type I	Go to step 2.
Type II	Go to step 5.

2	Check voltage of mass air flow meter power source.

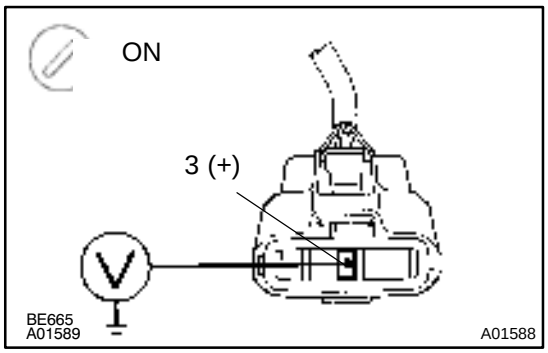

PREPARATION:

(a) Disconnect the mass air flow meter connector.

(b) Turn ignition switch ON.

CHECK:

Measure voltage between terminal 4 of mass air flow meter connector and body ground.

OK:

Voltage: 9 – 14 V

NG	Check for open in harness and connector between EFI main relay (Marking: EFI) and mass air flow meter (See page IN–41).

OK

3	Check voltage between terminal VG of ECM connector and body ground.

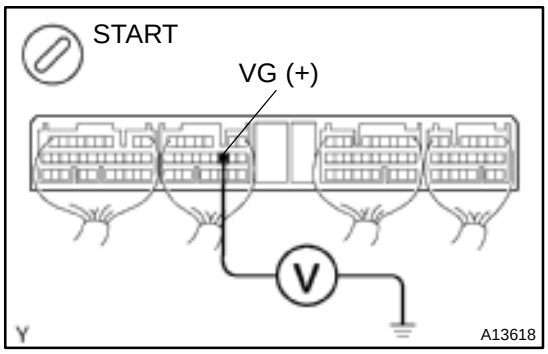

PREPARATION:

(a) Remove the ECM with connector still connected (See page SF–62).

(b) Start the engine.

CHECK:

Measure voltage between terminal VG of ECM and body ground while engine is idling.

OK:

Voltage:

1.1 – 1.5 V (P position and A/C switch OFF)

OK	Check and replace ECM (See page IN–41).

NG

4	**Check for open and short in harness and connector between mass air flow meter and ECM (See page IN–41).**

NG → **Repair or replace harness or connector.**

OK

Replace mass air flow meter.

5	**Check continuity between terminal EVG of ECM connector and body ground.**

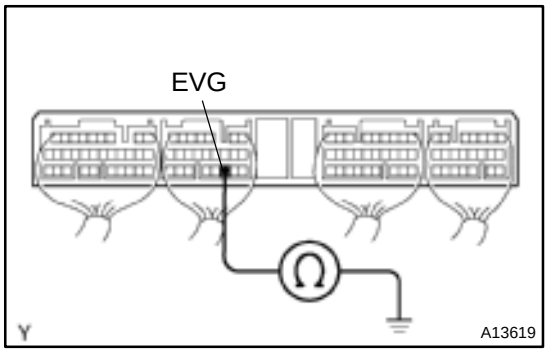

PREPARATION:
Remove the ECM with connector still connected (See page SF–62).
CHECK:
Check continuity between terminal EVG of ECM connector and body ground.
OK:
Continuity (1 Ω or less)

NG → **Check and replace ECM (See page IN–41).**

OK

6	**Check for open in harness and connector between mass air flow meter and ECM (See page IN–41).**

NG → **Repair or replace harness or connector.**

OK

Replace mass air flow meter.

DI6UX–02

DTC	P0110	Intake Air Temp. Circuit Malfunction

CIRCUIT DESCRIPTION

(fig.1)

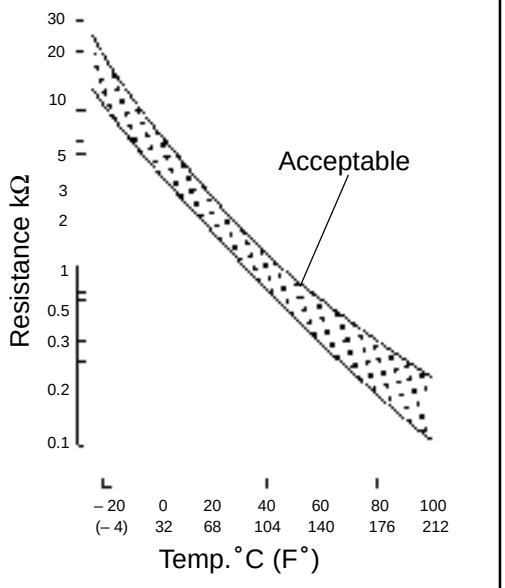

The intake air temp. sensor is built into the mass air flow meter and senses the intake air temperature.

A thermistor built in the sensor changes the resistance value according to the intake air temperature, the lower the intake air temperature, the greater the thermistor resistance value, and the higher the intake air temperature, the lower the thermistor resistance value (See fig.1).

The air intake temperature sensor is connected to the ECM (See below). The 5V power source voltage in the ECM is applied to the intake air temp. sensor from the terminal THA via a resistor R.

That is, the resistor R and the intake air temp. sensor are connected in series. When the resistance value of the intake air temp. sensor changes in accordance with changes in the intake air temperature, the potential at terminal THA also changes. Based on this signal, the ECM increases the fuel injection volume to improve driveability during cold engine operation.

If the ECM detects the DTC ”P0110”, it operates the fail safe function in which the intake air temperature is assumed to be 20˚C (68˚F).

DTC No.	DTC Detecting Condition	Trouble Area
P0110	Open or short in intake air temp. sensor circuit	• Open or short in intake air temp. sensor circuit • Intake air temp. sensor (built into mass air flow meter) • ECM

HINT:

After confirming DTC P0110, use the OBD II scan tool or TOYOTA hand–held tester to confirm the intake air temperature from CURRENT DATA.

Temperature Displayed	Malfunction
–40˚C (–40˚F)	Open circuit
140˚C (284˚F) or more	Short circuit

WIRING DIAGRAM

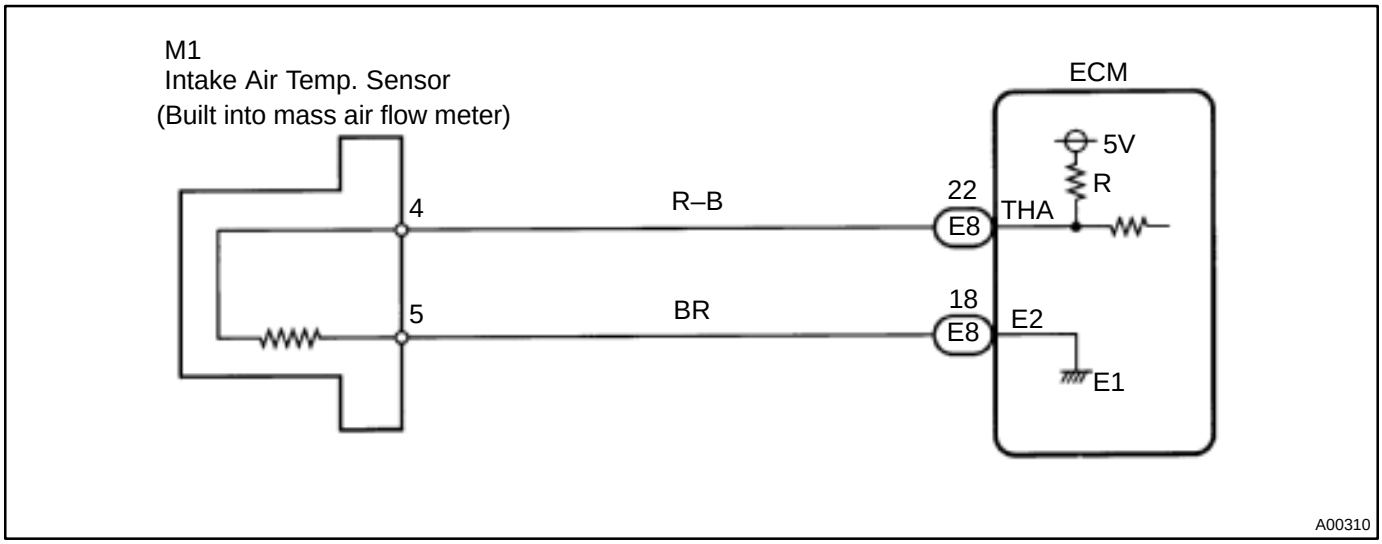

INSPECTION PROCEDURE

HINT:

- If DTC P0110 , P0115 and P0120 are output simultaneously, E2 (sensor ground) may be open.
- Read freeze frame data using TOYOTA hand–held tester or OBD II scan tool. Because freeze frame records the engine conditions when the malfunction is detected, when troubleshooting it is useful for determining whether the vehicle was running or stopped, the engine warmed up or not, the air–fuel ratio lean or rich, etc. at the time of the malfunction.

1	**Connect OBD II scan tool or TOYOTA hand–held tester, and read value of intake air temperature.**

PREPARATION:

(a) Connect the OBD II scan tool or TOYOTA hand–held tester to DLC3.

(b) Turn the ignition switch ON and push the OBD II scan tool or TOYOTA hand–held tester main switch ON.

CHECK:

Read temperature value on the OBD II scan tool or TOYOTA hand–held tester.

OK:

Same as actual air intake temperature.

HINT:

- If there is open circuit, OBD II scan tool or TOYOTA hand–held tester indicates – 40˚C (– 40˚F).
- If there is short circuit, OBD II scan tool or TOYOTA hand–held tester indicates 140˚C (284˚F) or more.

NG → **–40˚C (–40˚F) ....Go to step 2.**
140˚C (284˚F) or more ....Go to step 4.

OK

Check for intermittent problems
(See page DI–3).

2	Check for open in harness or ECM.

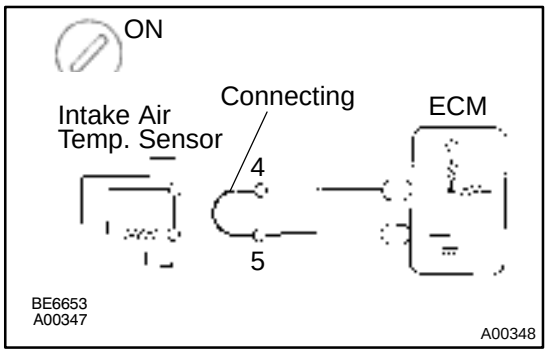

PREPARATION:

(a) Disconnect the intake temp. sensor connector.
(b) Connect sensor wire harness terminals together.
(c) Turn the ignition switch ON.

CHECK:

Read temp. value on the OBD II scan tool or TOYOTA hand–held tester.

OK:

Temp. value: 140˚C (284˚F) or more

OK	Confirm good connection at sensor. If OK, replace intake air temp. sensor.

NG

3	Check for open in harness or ECM.

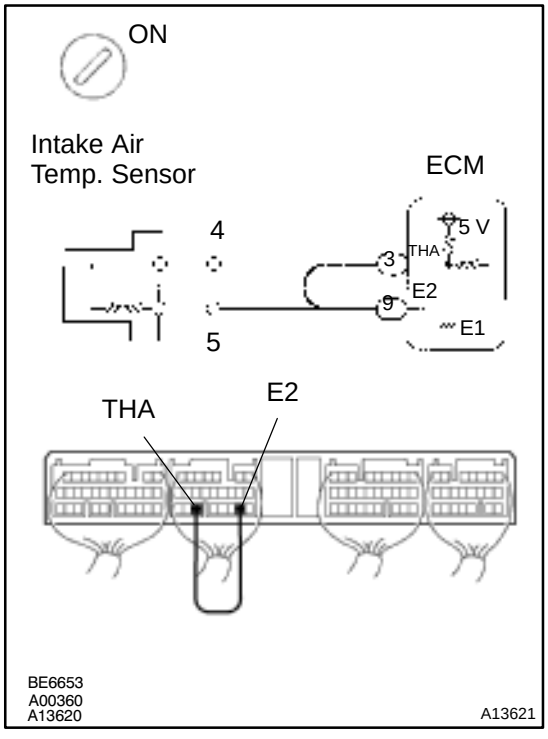

PREPARATION:

(a) Remove the ECM with connector still connected (See page SF–62).
(b) Connect between terminals THA and E2 of the ECM connector.

HINT:

In take air temp. sensor connector is disconnected.

Before checking, do a visual and contact pressure check for the ECM connector (See page IN–41).

(c) Turn the ignition switch ON.

CHECK:

Read temperature value on the OBD II scan tool or TOYOTA hand–held tester.

OK:

Temperature value: 140˚C (284˚F) or more

OK	Open in harness between terminals E2 or THA, repair or replace harness.

NG

Confirm good connection at ECM. If OK, check and replace ECM (See page IN–41).

4	Check for short in harness and ECM.

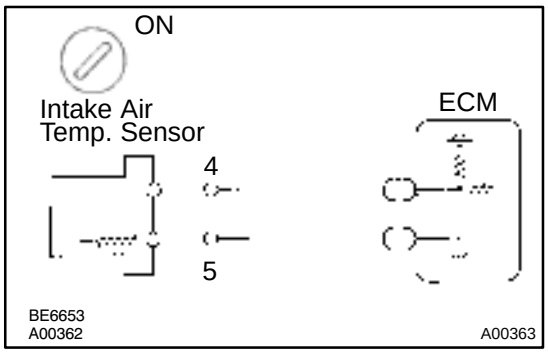

PREPARATION:
(a) Disconnect the mass air flow meter connector.
(b) Turn the ignition switch ON.
CHECK:
Read temperature value on the OBD II scan tool or TOYOTA hand–held tester.
OK:
Temperature value: –40˚C (–40˚F)

OK	Replace mass air flow meter.

NG

5	Check for short in harness or ECM.

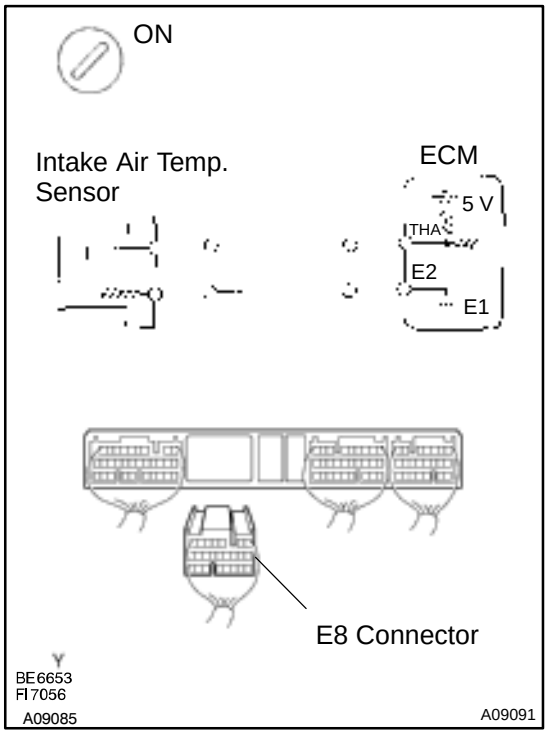

PREPARATION:
(a) Remove the ECM with connector still connected (See page SF–62).
(b) Disconnect the E8 connector of the ECM.
HINT:
Intake air temp. sensor connector is disconnected.
(c) Turn the ignition switch ON.
CHECK:
Read temperature value on the OBD II scan tool or TOYOTA hand–held tester.
OK:
Temperature value: –40˚C (–40˚F)

OK	Repair or replace harness or connector.

NG

Check and replace ECM (See page IN–41).

DI6UY–02

DTC	P0115	Engine Coolant Temp. Circuit Malfunction

CIRCUIT DESCRIPTION

A thermistor built into the engine coolant temp. sensor changes the resistance value according to the engine coolant temp.
The structure of the sensor and connection to the ECM is the same as in the intake air temp. circuit malfunction shown on page DI–28.
If the ECM detects the DTC P0115, it operates fail safe function in which the engine coolant temperature is assumed to be 80˚C (176˚F).

DTC No.	Detection Item	Trouble Area
P0115	Open or short in engine coolant temp. sensor circuit	• Open or short in engine coolant temp. sensor circuit • Engine coolant temp. sensor • ECM

HINT:
After confirming DTC P0115, use the OBD II scan tool or TOYOTA hand–held tester to confirm the engine coolant temp. from ”CURRENT DATA”.

Temp. Displayed	Malfunction
–40˚C (–40˚F)	Open circuit
140˚C (284˚F) or more	Short circuit

WIRING DIAGRAM

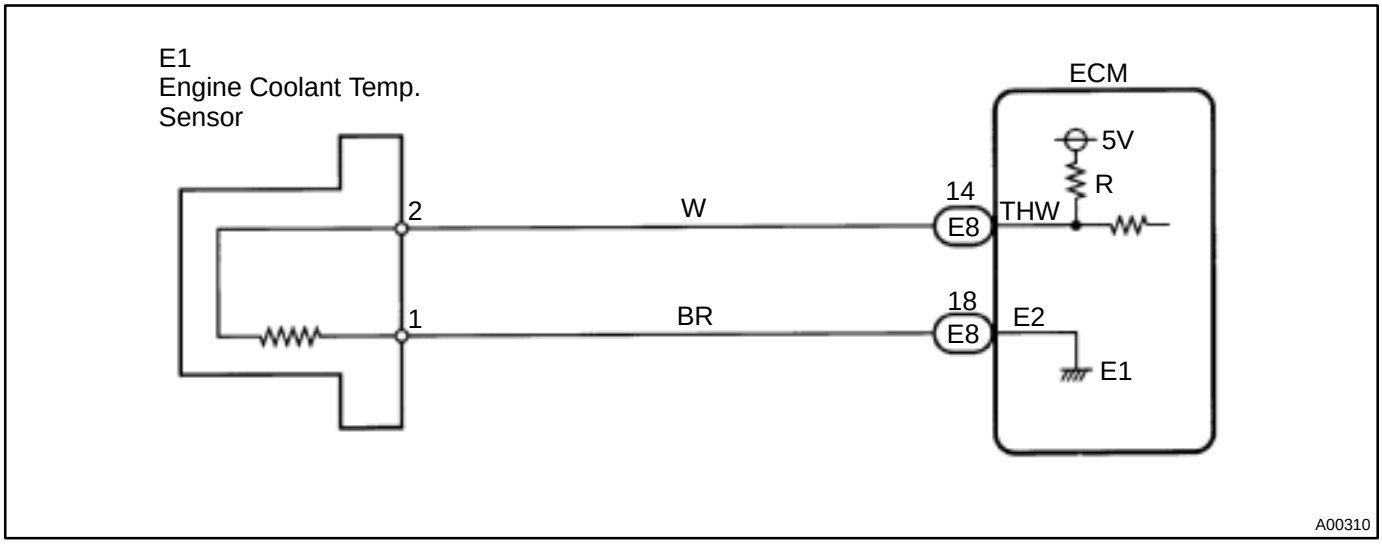

INSPECTION PROCEDURE

HINT:
- If DTC P0110, P0115 and P0120 are output simultaneously, E2 (sensor ground) may be open.
- Read freeze frame data using TOYOTA hand–held tester or OBD II scan tool. Because freeze frame records the engine conditions when the malfunction is detected, when troubleshooting it is useful for determining whether the vehicle was running or stopped, the engine warmed up or not, the air–fuel ratio lean or rich, etc. at the time of the malfunction.

1	**Connect OBD II scan tool or TOYOTA hand–held tester, and read value of engine coolant temperature.**

PREPARATION:

(a) Connect the OBD II scan tool or TOYOTA hand–held tester to the DLC3.

(b) Turn the ignition switch ON and push the OBD II scan tool or TOYOTA hand–held tester main switch ON.

CHECK:

Read temperature value on the OBD II scan tool or TOYOTA hand–held tester.

OK:

Same as actual engine coolant temperature

HINT:

- If there is open circuit, OBD II scan tool or TOYOTA hand–held tester indicates –40˚C (–40˚F).
- If there is open circuit, OBD II scan tool or TOYOTA hand–held tester indicates 140˚C (284˚F) or more.

NG → **–40˚C (–40˚F) ... Go to step 2.**
140˚C (284˚F) or more ... Go to step 4.

OK

Check for intermittent problems (See page DI–3).

2	**Check for open in harness or ECM.**

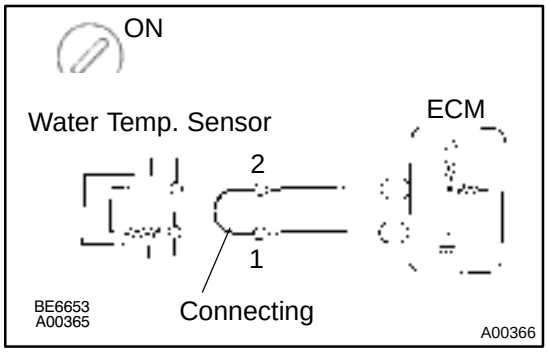

PREPARATION:

(a) Disconnect the engine coolant temp. sensor connector.

(b) Connect the sensor wire harness terminals together.

(c) Turn the ignition switch ON.

CHECK:

Read temperature value on the OBD II scan tool or TOYOTA hand–held tester.

OK:

Temperature value: 140˚C (284˚F) or more

OK → **Confirm good connection at sensor. If OK, replace engine coolant temp. sensor.**

NG

3	Check for open in harness or ECM.

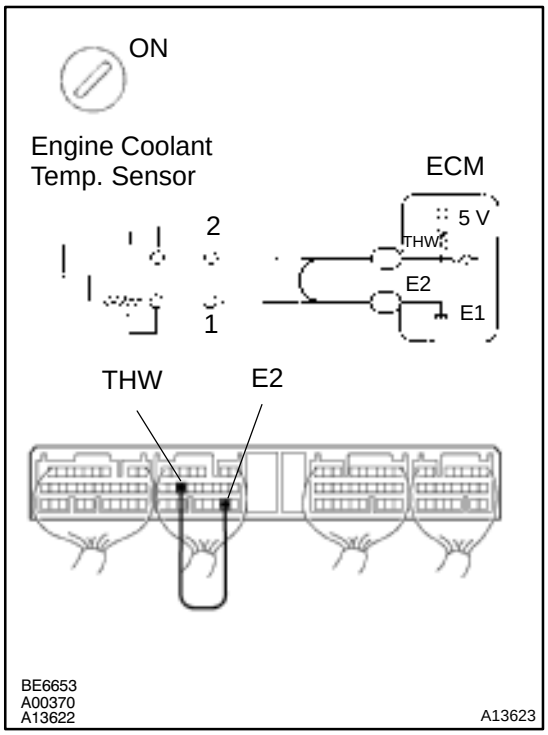

PREPARATION:

(a) Remove the ECM with connector still connected (See page SF–62).

(b) Connect between terminals THW and E2 of the ECM connector.

HINT:

Engine coolant temp. sensor connector is disconnected. Before checking, do a visual and contact pressure check for the ECM connector (See page IN–41).

(c) Turn the ignition switch ON.

CHECK:

Read temperature value on the OBD II scan tool or TOYOTA hand–held tester.

OK:

Temperature value: 140˚C (284˚F) or more

OK	Open in harness between terminals E2 or THW, repair or replace harness.

NG

Confirm good connection at ECM. If OK, check and replace ECM (See page IN–41).

4	Check for short in harness and ECM.

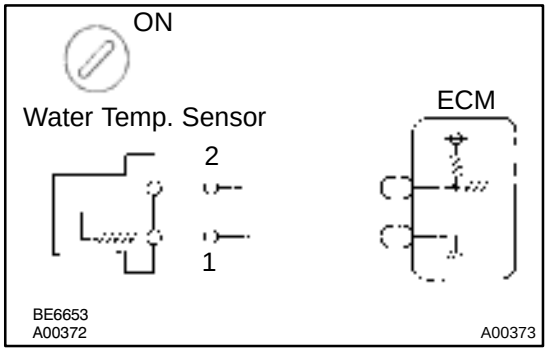

PREPARATION:

(a) Disconnect the engine coolant temp. sensor connector.

(b) Turn the ignition switch ON.

CHECK:

Read temperature value on the OBD II scan tool or TOYOTA hand–held tester.

OK:

Temperature value: – 40˚C (– 40˚F)

OK	Replace engine coolant temp. sensor.

NG

5	Check for short in harness or ECM.

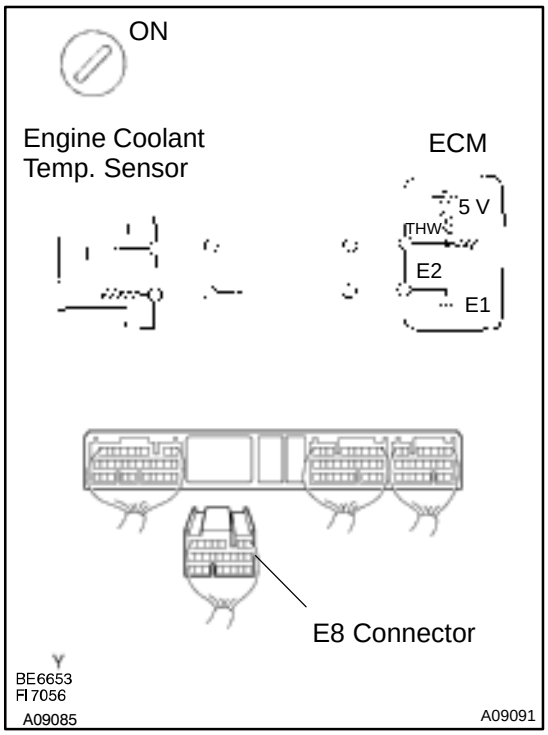

PREPARATION:

(a) Remove the ECM with connector still connected (See page SF–62).

(b) Disconnect the E8 connector of the ECM.

HINT:

Engine coolant temp. sensor connector is disconnected.

(c) Turn the ignition switch ON.

CHECK:

Read temperature value on the OBD II scan tool or TOYOTA hand–held tester.

OK:

Temperature value: –40˚C (–40˚F)

OK	Repair or replace harness or connector.

NG

Check and replace ECM (See page IN–41).

DI6UZ–03

DTC	P0116	Engine Coolant Temp. Circuit Range/ Performance Problem

CIRCUIT DESCRIPTION

Refer to DTC P0115 on page DI–32.

DTC No.	DTC Detecting Condition	Trouble Area
P0116	When the engine starts, the water temp. is –7˚C (20˚F) or less. And, 20 min. or more after the engine starts, the engine temp. sensor value is 5˚C (41˚F) or less (2 trip detection logic)	• Engine coolant temp. sensor • Cooling system
	When the engine starts, the water temp. is between –7˚C (20˚F) and 10˚C (50˚F). And, 5 min. or more after the engine starts, the engine coolant temp. sensor value is 5˚C (41˚F) or less. (2 trip detection logic)	
	When the fluctuations in the engine coolant tempeerature are within 3 ˚C (37 ˚F)before and afrer the follwing conditions are met: 1. IDL OFF time ≧ 250 sec. 2. Vehicle speed change of 30 km/h (19 mph) or more occurs 10 times or more. 3. 35 ˚C (95 ˚F) ≦ Engine coolant temperature when the ignition switch is turned ON < 60 ˚C (140 ˚F) 4. Intake air temperature after starting the engine ≧ –6.7 ˚C (20 ˚F)	

INSPECTION PROCEDURE

HINT:

- If DTC P0115 and P0116 are output simultaneously, engine coolant temp. sensor circuit may be open. Perform troubleshooting of DTC P0115 first.
- Read freeze frame data using TOYOTA hand–held tester or OBD II scan tool. Because freeze frame records the engine conditions when the malfunction is detected, when troubleshooting it is useful for determining whether the vehicle was running or stopped, the engine warmed up or not, the air–fuel ratio lean or rich, etc. at the time of the malfunction.

1	Are there any other codes (besides DTC P0116) being output?

YES → Go to relevant DTC chart.

NO

2	**Check thermostat (See page CO–9).**

NG → **Replace thermostat.**

OK

Replace engine coolant temp. sensor.

DI2DQ–07

DTC	P0120	Throttle/Pedal Position Sensor/Switch ”A” Circuit Malfunction

CIRCUIT DESCRIPTION

Throttle position sensor is mounted on the throttle body and it have the 2 sensors to detect the throttle opening angle and the malfunction of the throttle position sensor’s own.
The voltage applied to the terminals VTA and VTA2 of the ECM changes between 0 V and 5 V in proportion to the opening angle of the throttle valve.
The ECM judges the current opening angle of the throttle valve from these signals input from terminals VTA and VTA2, and the ECM controls the throttle motor to make the throttle valve angle properly in response to driving condition.
If this DTC is stored, the ECM shuts down the power for the throttle motor, and the throttle valve is fully closed by the return spring.

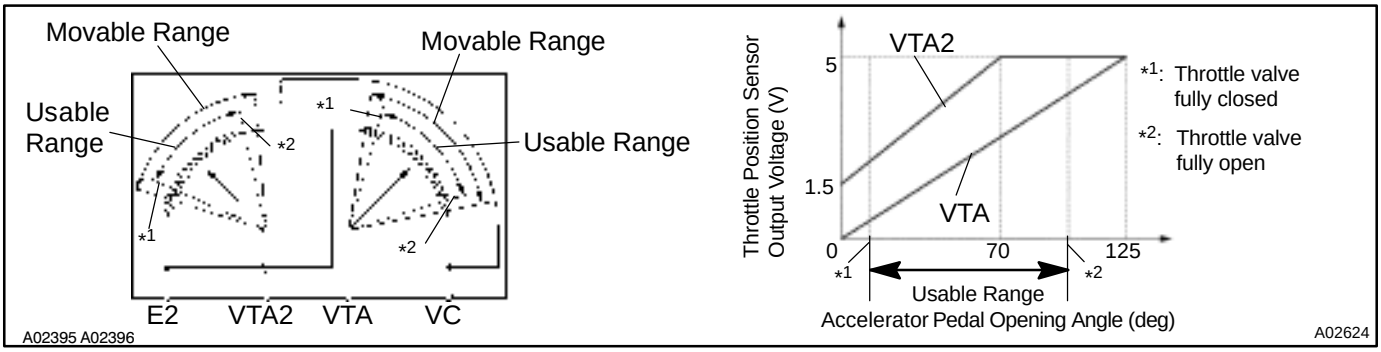

DTC No.	DTC Detecting Condition	Trouble Area
P0120	Condition (a), (b), (c), (d) or (e) continues for 2.0 seconds: (a) VTA ≦ 0.2 V (b) VTA2 ≦ 0.625 V (c) VTA ≧ 4.8 V (d) When VTA ≧ 0.2 V and ≦ 2.0 V, and VTA2 ≧ 4.97 V (e) VTA – VTA2 ≦ 0.02 V	• Open or short in throttle position sensor circuit • Throttle position sensor • ECM
	Condition (a) continues for 0.4 seconds: (a) VTA ≦ 0.2 V and VTA2 ≦ 0.5 V	

HINT:
After confirming DTC P0120, use the OBD II scan tool or TOYOTA hand–held tester to confirm the accelerator pedal opening position percentage.

Accelerator pedal opening position expressed as percentage and voltage				Trouble area
Accelerator pedal released		Accelerator pedal depressed		
THROTTLE POS	THROTTLE POS #2	THROTTLE POS	THROTTLE POS #2	
0 %	0 V	0 %	0 V	VC circuit open
0 %	2.0 – 2.9 V	0 %	4.6 – 5.1 V	VTA circuit open or ground short
8 – 20 %	0 V	64 – 96 %	0 V	VTA2 circuit open or ground short
100 %	5 V	100 %	5 V	E2 circuit open

WIRING DIAGRAM

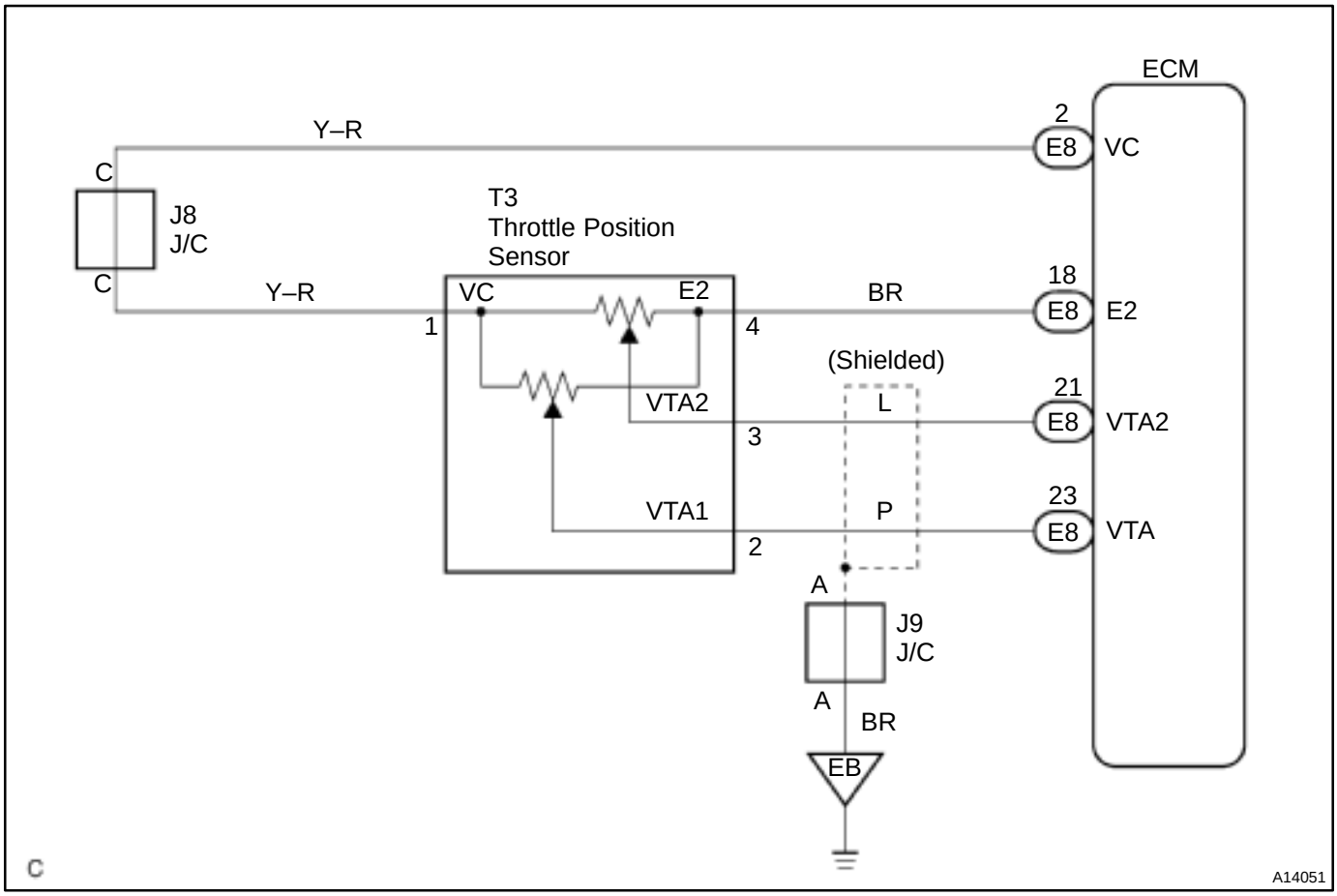

INSPECTION PROCEDURE

HINT:

- If DTCs P0110, P0115, P0120, P0450 and P1120 are output simultaneously, E2 (sensor ground) may be open.
- Read freeze frame data using TOYOTA hand–held tester or OBD II scan tool. Because freeze frame records the engine conditions when the malfunction is detected. When troubleshooting, it is useful for determining whether the vehicle was running or stopped, the engine was warmed up or not, the air–fuel ratio was lean or rich, etc. at the time of the malfunction.

LEXUS hand–held tester:

1	**Connect LEXUS hand–held tester, and read throttle valve opening percentage.**

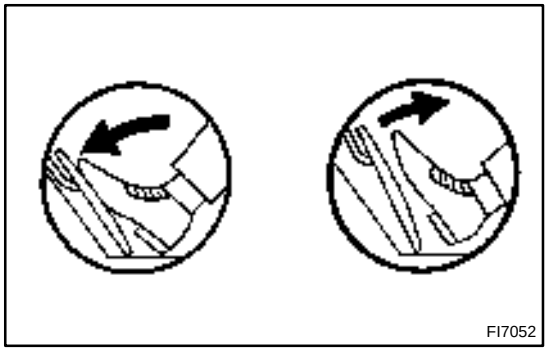

PREPARATION:

(a) Connect the TOYOTA hand–held tester to the DLC3.

(b) Turn the ignition switch ON and push the TOYOTA hand–held tester main switch ON.

CHECK:

Read the throttle valve opening percentage for VTA circuit and read the voltage for VTA2 circuit.

OK:

Accelerator Pedal	Throttle valve opening position expressed as percentage (VTA)	Voltage (VTA2)
Released	64 – 96 %	4.6 – 5.1 V
Depressed	8 – 20 %	2.0 – 2.9 V

OK	**Check and replace ECM (See page IN–41).**

NG

2	**Check voltage between terminals VC and E2 of ECM connector.**

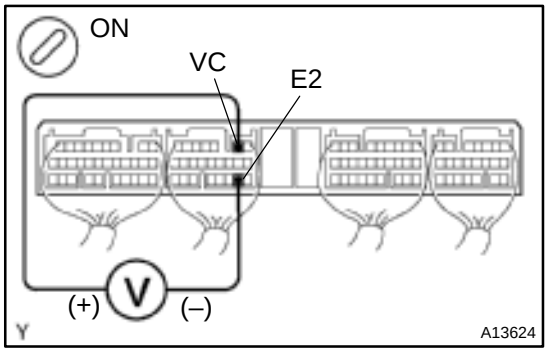

PREPARATION:

(a) Remove the ECM with connector still connected (See page SF–62).

(b) Turn the ignition switch ON.

CHECK:

Measure the voltage between terminals VC and E2 of the ECM connector.

OK:

Voltage: 4.5 – 5.5 V

NG	**Check and replace ECM (See page IN–41).**

OK

3	**Check voltage between terminals VTA and E2, and VTA2 and E2 of ECM connector.**

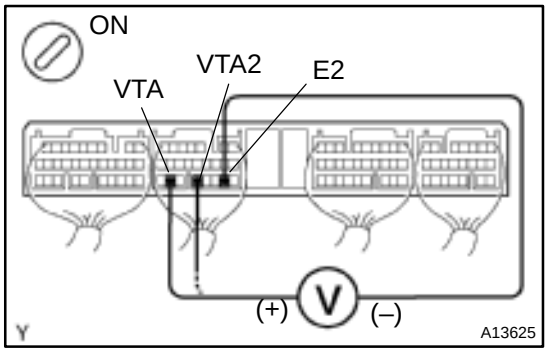

PREPARATION:

(a) Remove the ECM with connector still connected (See page SF–62).

(b) Turn the ignition switch ON.

CHECK:

Measure the voltage between terminals VTA and E2, and VTA2 and E2 of the ECM connector.

OK:

Accelerator pedal	Voltage	
	VTA – E2	VTA2 – E2
Released	0.4 – 1.0 V	2.0 – 2.9 V
Depressed	3.2 – 4.8 V	4.6 – 5.1 V

OK	Check and replace ECM (See page IN–41).

NG

4	Check throttle position sensor (See page SF–24).

NG	Replace throttle position sensor (See page SF–29).

OK

Check for open and short in harness and connector in VC, VTA, VTA2 and E2 circuits between ECM and throttle position sensor (See page IN–41).

OBD II scan tool (excluding TOYOTA hand–held tester):

1	Check voltage between terminals VC and E2 of ECM connector.

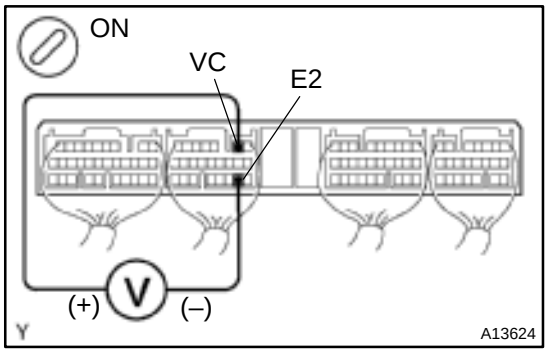

PREPARATION:

(a) Remove the ECM with connector still connected (See page SF–62).

(b) Turn the ignition switch ON.

CHECK:

Measure the voltage between terminals VC and E2 of the ECM connector.

OK:

Voltage: 4.5 – 5.5 V

NG	Check and replace ECM (See page IN–41).

OK

2	Check voltage between terminals VTA and E2, and VTA2 and E2 of ECM connector.

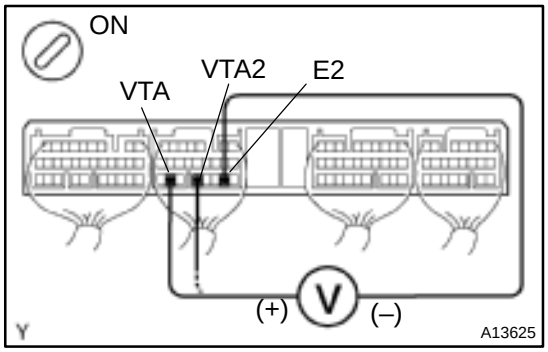

PREPARATION:

(a) Remove the ECM with connector still connected (See page SF–62).

(b) Turn the ignition switch ON.

CHECK:

Measure the voltage between terminals VTA and E2, and VTA2 and E2 of the ECM connector.

OK:

Accelerator pedal	Voltage	
	VTA – E2	VTA2 – E2
Released	0.4 – 1.0 V	2.0 – 2.9 V
Depressed	3.2 – 4.8 V	4.6 – 5.1 V

OK → **Check and replace ECM (See page IN–41).**

NG

3	Check throttle position sensor (See page SF–24).

NG → **Replace throttle position sensor (See page SF–29).**

OK

Check for open and short in harness and connector in VC, VTA, VTA2 and E2 circuits between ECM and throttle position sensor (See page IN–41).

DTC	P0125	Insufficient Temp. for Closed Loop Fuel Control

CIRCUIT DESCRIPTION

To obtain a high purification rate for the CO, HC and NOx components of the exhaust gas, a three–way catalytic converter is used, but for the most efficient use of the three–way catalytic converter, the air–fuel ratio must be precisely controlled so that it is always close to the stoichiometric air–fuel ratio.
The oxygen sensor has the characteristic whereby its output voltage changes suddenly in the vicinity of the stoichiometric air–fuel ratio. This is used to detect the oxygen concentration in the exhaust gas and provide feedback to the computer for control of the air–fuel ratio.
When the air–fuel ratio becomes LEAN, the oxygen concentration in the exhaust increases and the oxygen sensor informs the ECM of the LEAN condition (small electromotive force: < 0.45 V).
When the air–fuel ratio is RICHER than the stoichiometric air–fuel ratio the oxygen concentration in the exhaust gas in reduced and the oxygen sensor informs the ECM of the RICH condition (large electromotive force: > 0.45V).
The ECM judges by the electromotive force from the oxygen sensor whether the air–fuel ratio is RICH or LEAN and controls the injection time accordingly. However, if malfunction of the oxygen sensor causes output of abnormal electromotive force, the ECM is unable to perform accurate air–fuel ratio control.
The oxygen sensors include a heater which heats the zirconia element. The heater is controlled by the ECM. When the intake air volume is low (the temp. of the exhaust gas is low) current flows to the heater to heat the sensor for accurate oxygen concentration detection.

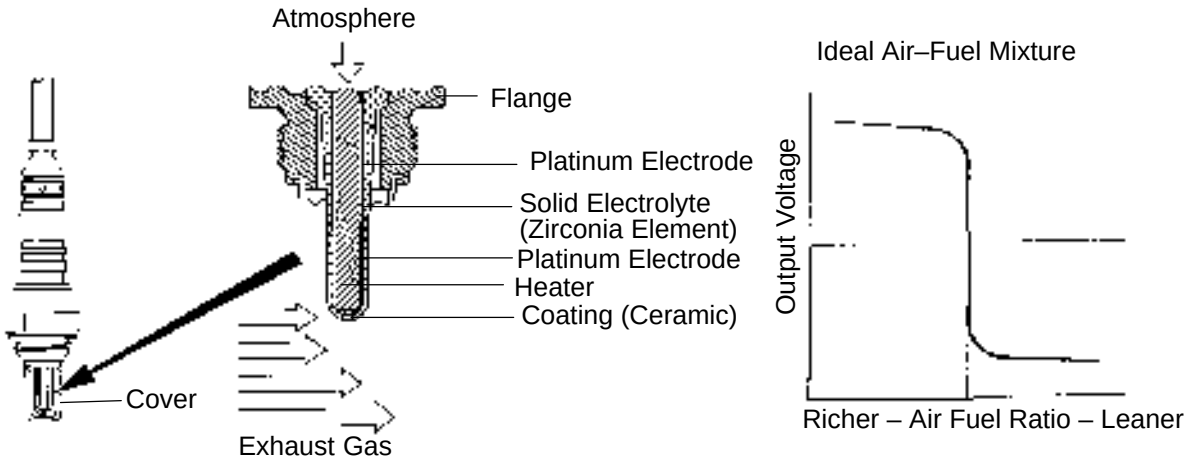

DTC No.	DTC Detecting Condition	Trouble Area
P0125	After the engine is warmed up, oxygen sensor (bank 1 sensor 1) output does not indicate RICH (≧ 0.45 V) even once when conditions (a), (b), and (c) continue for at least 50 sec. (a) Engine speed: 800 rpm or more (b) Vehicle speed: 40 – 100 km/h (25 – 62 mph) (c) 20 sec. or more after starting engine	• Fuel system • Air induction system • Injector • Ignition system • Gas leakage on exhaust system • Open or short in heated oxygen sensor (bank 1 sensor 1) circuit • Heated oxygen sensor (bank 1 sensor 1) • ECM

HINT:
After confirming DTC P0125, use the OBD II scan tool or TOYOTA hand–held tester to confirm voltage output of oxygen sensor (bank 1 sensor 1) from "CURRENT DATA".
If voltage output of oxygen sensor (bank 1 sensor 1) is less than 0.1 V, oxygen sensor (bank 1 sensor 1) circuit may be open or short.

WIRING DIAGRAM

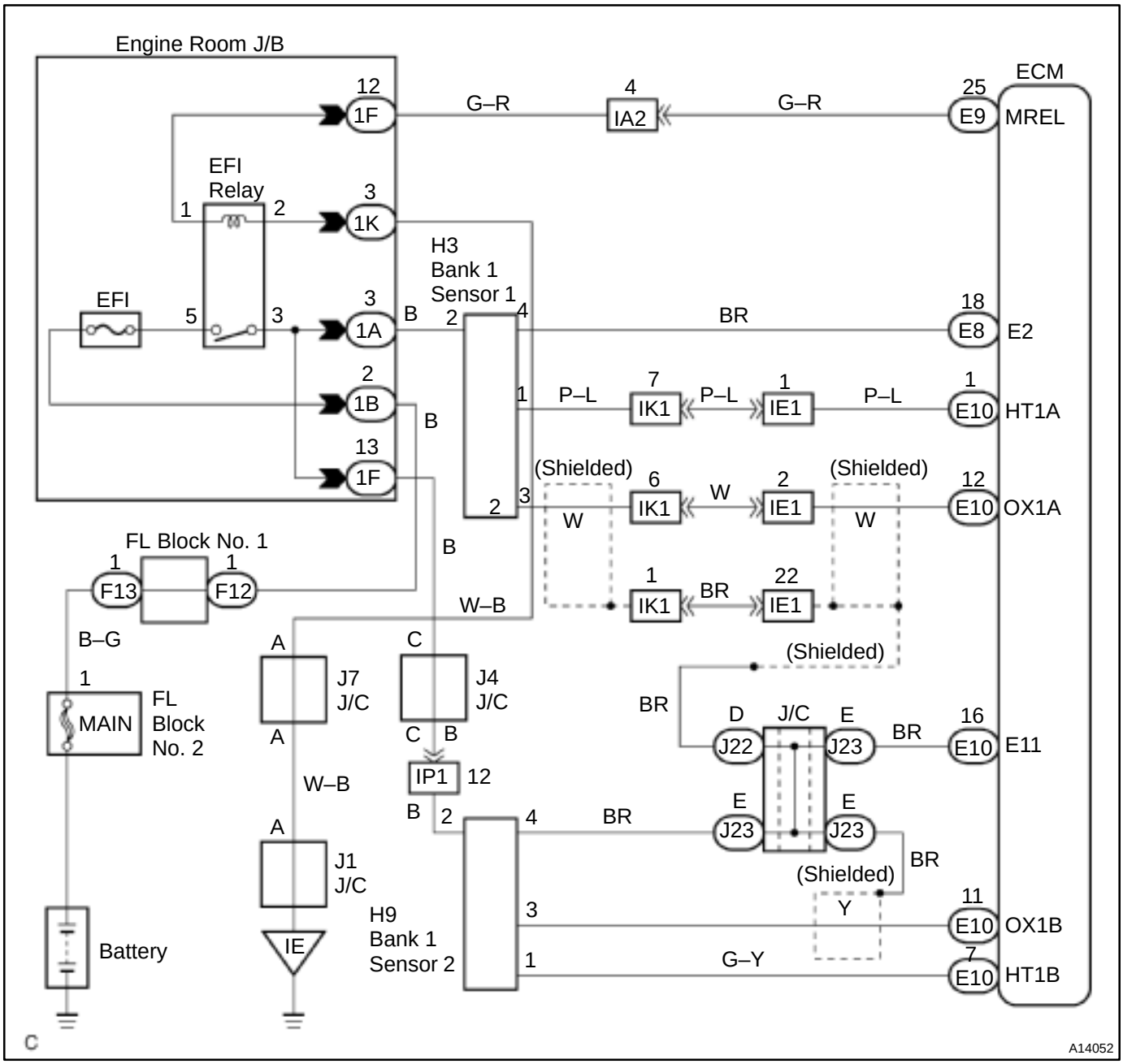

INSPECTION PROCEDURE

HINT:

- If the vehicle run out of fuel, the air–fuel ratio is LEAN and DTC P0125 will be recorded . The MIL then comes on.
- Read freeze frame data using TOYOTA hand–held tester or OBD II scan tool. Because freeze frame records the engine conditions when the malfunction is detected, when troubleshooting it is useful for determining whether the vehicle was running or stopped, the engine warmed up or not, the air–fuel ratio lean or rich, etc at the time of the malfunction.
- There is a possibility that P0125 is detected because of abnormal fuel system, so, when P0125 is memorized, check P0171 and P0172 even if P0171 and P0172 are memorized.

1	**Are there any other codes (besides DTC P0125) being output ?**

YES → **Go to relevant DTC chart.**

NO

2	**Connect the OBD II scan tool or TOYOTA hand–held tester and read value for voltage output of oxygen sensor (bank 1 sensor 1).**

PREPARATION:

(a) Connect the OBD II scan tool or TOYOTA hand–held tester to the DLC3.

(b) Warm up engine to normal operating temp (above 75˚C).

CHECK:

Read voltage output of the oxygen sensor (bank 1 sensor 1) when engine is suddenly raced.

HINT:

Perform quick racing to 4,000 rpm 3 times using accelerator pedal.

OK:

Both oxygen sensor (bank 1 sensor 1) output a RICH signal (0.45 V or more) at least once.

OK → **Go to step 9.**

NG

3	**Check for open and short in harness and connector between ECM and oxygen sensor (bank 1 sensor 1) (See page IN–41).**

NG → **Repair or replace harness or connector.**

OK

4	Check whether misfire is occurred or not by monitoring DTC and data list.

NG → Perform troubleshooting for misfire (See page DI–65).

OK ↓

5	Check air induction system (See page SF–1).

NG → Repair or replace induction system.

OK ↓

6	Check fuel pressure (See page SF–6).

NG → Check and repair fuel pump and fuel pipe line (See page SF–1).

OK ↓

7	Check injector injection (See page SF–12).

NG → Replace injector.

OK ↓

8	Check gas leakade on exhaust system.

NG → Repair or replace.

OK ↓

Replace oxygen sensor (bank 1 sensor 1).

9	Perform confirmation driving pattern (See page DI–50).

Go

10	Is there DTC P0125 being output again?

YES → Check and replace ECM.

NO

11	Did vehicle runs out of fuel in the past?

NO → Check for intermittent problems (See page DI–3).

YES

DTC P0125 is caused by running out of fuel.

DTC	P0130	Oxygen Sensor Circuit Malfunction (Bank 1 Sensor 1)

CIRCUIT DESCRIPTION

Refer to DTC P0125 on page DI–44.

DTC No.	DTC Detecting Condition	Trouble Area
P0130	Voltage output of oxygen sensor remains at 0.42 V or more, or 0.48 V or less, during idling after the engine is warmed up (2 trip detection logic)	• Open or short in heated oxygen sensor circuit • Heated oxygen sensor • Air induction system • Fuel pressure • Injector • ECM

HINT:
Sensor 1 refers to the sensor closer to the engine body.
The oxygen sensor's output voltage and the short−term fuel trim value can be read using the OBD II scan tool or TOYOTA hand−held tester.

WIRING DIAGRAM

Refer to DTC P0125 on page DI–44.

CONFIRMATION DRIVING PATTERN

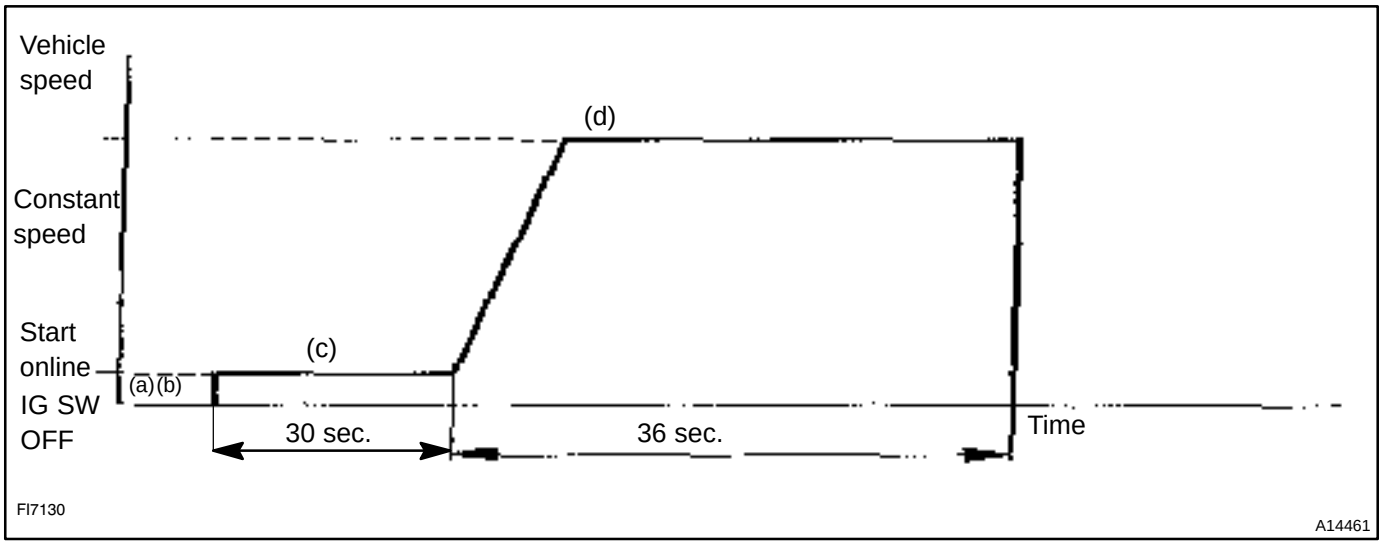

(a) Connect the TOYOTA hand–held tester to the DLC3.
(b) Switch the TOYOTA hand–held tester from normal mode to check mode (See page DI–3).
(c) Start the engine and pass for 30 sec. or more.
(d) Drive the vehicle at constant speed for 36 sec. or more.

HINT:
If a malfunction exists, the MIL will light up during step (d).

NOTICE:
If the conditions in this test are not strictly followed, detection of the malfunction will not be possible.
If you do not have a TOYOTA hand–held tester, turn the ignition switch OFF after performing steps (c) to (d), then perform steps (c) to (d) again.

INSPECTION PROCEDURE

HINT:
Read freeze frame data using TOYOTA hand–held tester or OBD II scan tool. Because freeze frame records the engine conditions when the malfunction is detected, when troubleshooting it is useful for determining whether the vehicle was running or stopped, the engine warmed up or not, the air–fuel ratio lean or rich, etc. at the time of the malfunction.

1	**Are there any other codes (besides DTC P0130) being output?**

YES → **Go to relevant DTC chart.**

NO

2	**Check the output voltage of oxygen sensor during idling.**

PREPARATION:
Warm up the oxygen sensor the engine at 2,500 rpm for approx. 90 sec.
CHECK:
Use the OBD II scan tool or TOYOTA hand–held tester read the output voltage of the oxygen sensor during idling.
OK:

Oxygen sensor output voltage:
Alternates repeatedly between less than 0.42 V and more than 0.48 V (See the Following table).

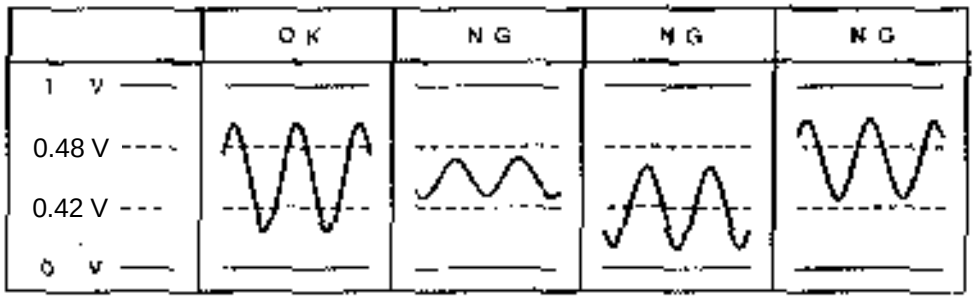

OK → **Go to step 7.**

NG

3	Check for open and short in harness and connector between ECM and oxygen sensor (bank 1 sensor 1) (See page IN–30).

NG → Repair or replace harness or connector.

OK

4	Check air induction system (See page SF–1).

NG → Repair or replace induction system.

OK

5	Check fuel pressure (See page SF–6).

NG → Check and repair fuel pump, fuel pipe line and filter (See page SF–1).

OK

6	Check injector injection (See page SF–12).

NG → Replace injector.

OK

Replace oxygen sensor (bank 1 sensor 1).

7	Perform confirmation driving pattern (See page DI–50).

Go

8	**Are there DTC P0130 being output again?**

YES → **Check for intermittent problems (See page DI–3).**

NO

Check and replace ECM.

DTC	P0133	Oxygen Sensor Circuit Slow Responce (Bank 1 Sensor 1)

CIRCUIT DESCRIPTION

Refer to DTC P0125 on page DI–44.

DTC No.	DTC Detecting Condition	Trouble Area
P0133	Response time for the oxygen sensor's voltage output to-change from rich to lean, or from lean to rich, is 0.4 sec. or more during constant vehicle speed after the engine is warmed up (2 trip detection logic)	• Open or short in heated oxygen sensor circuit • Heated oxygen sensor • Air induction system • Fuel pressure • Injector • ECM

HINT:
Sensor 1 refers to the sensor closer to the engine body.

INSPECTION PROCEDURE

HINT:
Read freeze frame data using TOYOTA hand–held tester or OBD II scantool. Because freeze frame records the engine conditions when the malfunction is detected, when troubleshooting it is useful for determining whether the vehicle was running or stopped, the engine warmed up or not, the air–fuel ratio lean or rich, etc. at the time of the malfunction.

1	**Are there any other codes (besides DTC P0133) being output?**

YES → **Go to relevant DTC chart.**

NO

2	**Check the output voltage of heated oxygen sensor during idling.**

PREPARATION:

Warm up the heated oxygen sensor the engine at 2,500 rpm for approx. 90 sec.

CHECK:

Use the OBD II scan tool or TOYOTA hand–held tester read the output voltage of the heated oxygen sensor during idling.

OK:

Oxygen sensor output voltage:

Alternates repeatedly between less than 0.42 V and more than 0.48 V (See the Following table).

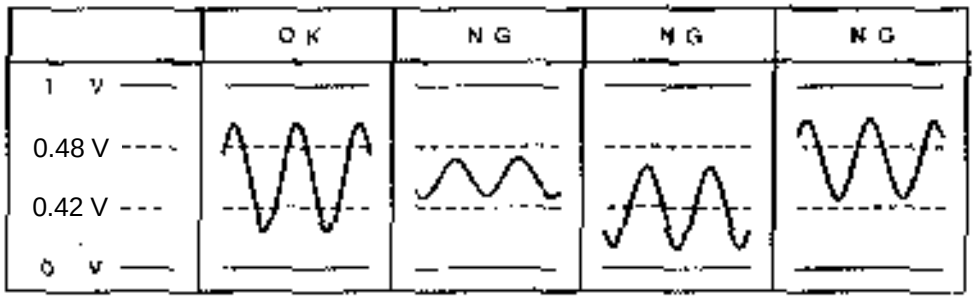

P18349

OK	**Go to step 7.**

NG

3	**Check for open and short in harness and connector between ECM and heated oxygen sensor (bank 1 sensor 1) (See page IN–30).**

NG	**Repair or replace harness or connector.**

OK

4	**Check air induction system (See page SF–1).**

NG	**Repair or replace induction system.**

OK

5	Check fuel pressure (See page SF–6).

NG → Check and repair fuel pump and fuel pipe line (See page SF–1).

OK ↓

6	Check injector injection (See page SF–12).

NG → Replace injector.

OK ↓

Replace oxygen sensor (bank 1 sensor 1).

7	Perform confirmation driving pattern (See page DI–50).

Go ↓

8	Are there DTC P0133 being output again?

YES → Check for intermittent problems (See page DI–3).

NO ↓

Check and replace ECM.

DTC	P0135	Heated Oxygen Sensor Heater Circuit Malfunction (Bank1 Sensor1)

DTC	P0141	Heated Oxygen Sensor Heated Circuit Malfunction (Bank1 Sensor2)

CIRCUIT DESCRIPTION

Refer to DTC P0125 on page DI–44.

DTC No.	DTC Detecting Condition	Trouble Area
P0135 P0141	When the heater operates, heater current exceeds 2 A (2 trip detection logic)	• Open or short in heater circuit of heated oxygen sensor • Heated oxygen sensor heater • ECM
	Heater current of 0.2 A or less when the heater operates (2 trip detection logic)	

HINT:

- Bank 1 refers to the bank that includes cylinder No.1.
- Sensor 1 refers to the sensor closer to the engine body.
- Sensor 2 refers to the sensor farther away from the engine body.

WIRING DIAGRAM

Refer to DTC P0125 on page DI–44.

INSPECTION PROCEDURE

HINT:

Read freeze frame data using TOYOTA hand–held tester or OBD II scan tool. Because freeze frame records the engine conditions when the malfunction is detected, when troubleshooting it is useful for determining whether the vehicle was running or stopped, the engine warmed up or not, the air–fuel ratio lean or rich, etc. at the time of the malfunction.

1	Check voltage between terminals HT1A, HT1B of ECM connectors and body ground.

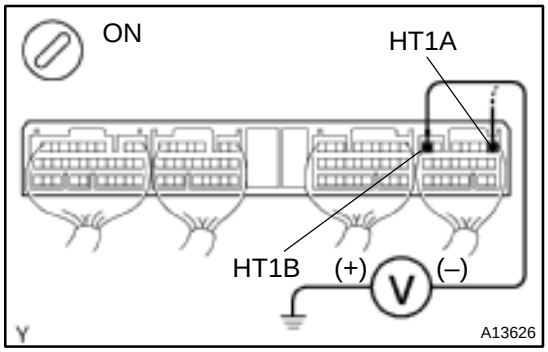

PREPARATION:

(a) Remove the ECM with connector still connected (See page SF–62).

(b) Turn the ignition switch ON.

CHECK:

Measure voltage between terminals HT1A, HT1B of ECM connectors and body ground.

HINT:

- Connect terminal HT1A to bank 1 sensor 1.
- Connect terminal HT1B to bank 1 sensor 2.

OK:

Voltage: 9 – 14 V

OK	Check and replace ECM (See page IN–41).

NG

2	Check resistance of heated oxygen sensor heater (See page SF–58).

NG	Replace heated oxygen sensor.

OK

Check and repair harness or connector between EFI relay (Marking: EFI), heated oxygen sensor and ECM (See page IN–41).

DTC	P0136	Oxygen Sensor Circuit Malfunction (Bank 1 Sensor 2)

CIRCUIT DESCRIPTION

Refer to DTC P0125 on page DI–44.

DTC No.	DTC Detecting Condition	Trouble Area
P0136	Voltage output of the heated oxygen sensor remains at 0.45 V or more, or 0.55 V or less when the vehicle is driven at 40 km/h (25 mph) or more after the engine is warmed up. (2 trip detection logic).	• Open or short in heated oxygen sensor circuit • Heated oxygen sensor

HINT:
Sensor 2 refers to the sensor farther away from the engine body.

WIRING DIAGRAM

Refer to DTC P0125 on page DI–44.

CONFIRMATION DRIVING PATTERN

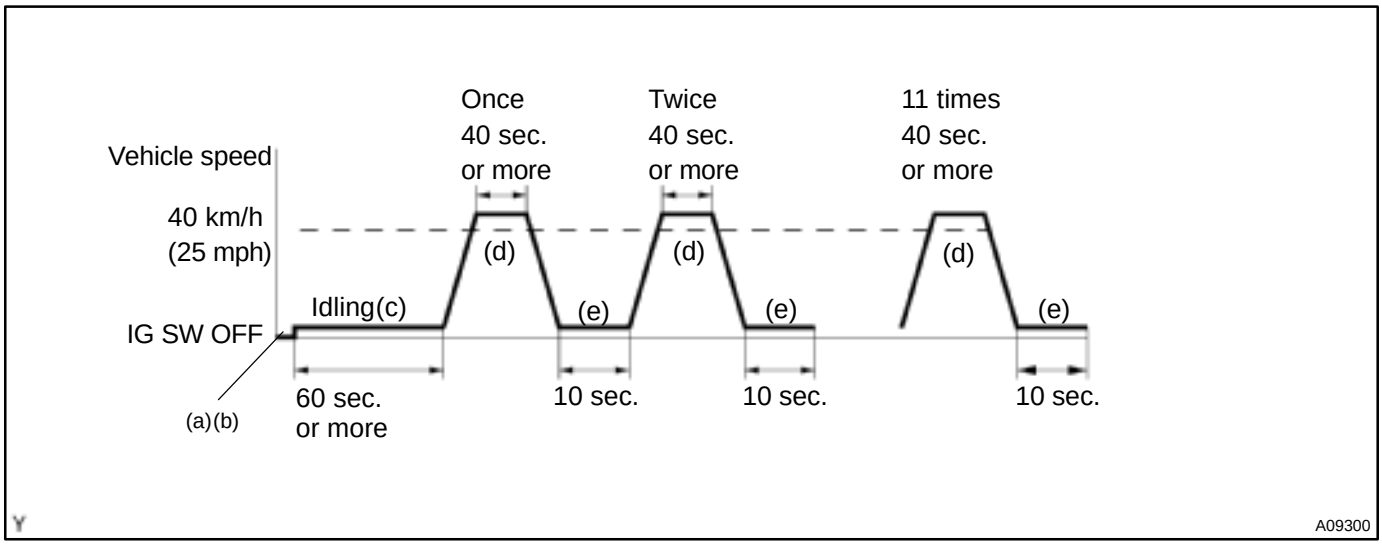

(a) Connect the hand–held tester to the DLC3.
(b) Switch the hand–held tester from the Normal Mode to the Check (Test) Mode (See page DI–3).
(c) Start the engine and let the engine idle for 60 seconds or more.
(d) Drive the vehicle at 40 km/h (25 mph) or more for 40 seconds or more.
(e) Let the engine idle for 10 seconds or more.
(f) Preform steps (d) to (e) 11 times.

HINT:

- During performing the steps (d) to (e) 11 times, drive the vehicle at over 65 km and make the fuel cut happen for over 3 sec.
- If a malfunction exists, the MIL will be indicated on the multi information display during step (f).

NOTICE:
If the conditions in this test are not strictly followed, detection of the malfunction will not be possible. If you do not have a hand–held tester, turn the ignition switch OFF after performing steps (c) to (f), then perform steps (c) to (f) again.

INSPECTION PROCEDURE

HINT:
Read freeze frame data using TOYOTA hand–held tester or OBD II scan tool. Because freeze frame records the engine conditions when the malfunction is detected, when troubleshooting it is useful for determining whether the vehicle was running or stopped, the engine warmed up or not, the air–fuel ratio lean or rich, etc. at the time of the malfunction.

1	**Are there any other codes (besides DTC P0136) being output?**

YES → **Go to relevant DTC chart.**

NO

2	**Check for open and short in harness and connector between ECM and oxygen sensor (See page IN–41).**

NG → **Repair or replace harness or connector.**

OK

3	**Check output voltage of oxygen sensor.**

PREPARATION:
(a) Connect the OBD II scan tool or TOYOTA hand–held tester to the DLC3.
(b) Warm up the engine to normal operating temp.

CHECK:
Read voltage output of oxygen sensor when engine suddenly raced.
HINT:
Perform a quick racing of 2,000 rpm or more 3 times by using the accelerator pedal.

OK:
Oxygen sensor output voltage: Alternates from 0.40 V or less to 0.50 V or more.

OK → **Check that each connector is properly connected.**

NG

Replace oxygen sensor.

DI6V7–02

DTC	P0171	System too Lean (Fuel Trim)

DTC	P0172	System too Rich (Fuel Trim)

CIRCUIT DESCRIPTION

Fuel trim refers to the feedback compensation value compared against the basic injection time. Fuel trim includes short–term fuel trim and long–term fuel trim.
Short–term fuel trim is the short–term fuel compensation used to maintain the air–fuel ratio at its ideal theoretical value. The signal from the oxygen sensor indicates whether the air–fuel ratio is RICH or LEAN compared to the ideal theoretical value, triggering a reduction in fuel volume if the air–fuel ratio is rich, and an increase in fuel volume if it is lean.
Long–term fuel trim is overall fuel compensation carried out long–term to compensate for continual deviation of the short–term fuel trim from the central value due to individual engine differences, wear over time and changes in the usage environment.
If both the short–term fuel trim and long–term fuel trim are LEAN or RICH beyond a certain value, it is detected as a malfunction and the MIL lights up.

DTC No.	DTC Detecting Condition	Trouble Area
P0171	When the air–fuel ratio feedback is stable after engine warming up, the fuel trim is considerably in error on the RICH side (2 trip detection logic)	• Air induction system • Injector blockage • Mass air flow meter • Engine coolant temp. sensor • Fuel pressure • Gas leakage on exhaust system • Open or short in heated oxygen sensor (bank 1 sensor 1) circuit • Heated oxygen sensor (bank 1 sensor 1)
P0172	When air fuel ratio feedback is stable after warming up engine, the fuel trim is considerably in error on LEAN side (2 trip detection logic)	• Injector leak, blockage • Mass air flow meter • Engine coolant temp. sensor • Ignition system • Fuel pressure • Gas leakage on exhaust system • Open or short in heated oxygen sensor (bank 1, 2 sensor 1) circuit • Heated oxygen sensor (bank 1, 2 sensor 1) • ECM

HINT:

- When DTC P0171 is recorded, the actual air–fuel ratio is on the LEAN side. When DTC P0172 is recorded, the actual air–fuel ratio is on the RICH side.
- If the vehicle runs out of fuel, the air–fuel ratio is LEAN and DTC P0171 is recorded. The MIL then comes on.
- If the total of the short–term fuel trim value and long–term fuel trim value is within ± 38 %, the system is functioning normally.
- The oxygen sensor output voltage and the short–term fuel trim value can be read using the OBD II scan tool or TOYOTA hand–held tester.

INSPECTION PROCEDURE

HINT:
Read freeze frame data using TOYOTA hand–held tester or OBD II scan tool. Because freeze frame records the engine conditions when the malfunction is detected, when troubleshooting it is useful for determining whether the vehicle was running or stopped, the engine warmed up or not, the air–fuel ratio lean or rich, etc. at the time of the malfunction.

1	**Check air induction system (See page SF–1).**

NG → **Repair or replace.**

OK

2	**Check injector injection (See page SF–12).**

NG → **Replace injector.**

OK

3	**Check mass air flow meter and engine coolant temp. sensor (See page SF–22 and SF–49).**

NG → **Repair or replace.**

OK

4	**Check for spark and ignition (See page IG–1).**

NG → **Repair or replace.**

OK

5	**Check fuel pressure (See page SF–6).**

NG → **Check and repair fuel pump and fuel pipe line.**

OK

6	**Check gas leakade on exhaust system.**

NG → **Repair or replace.**

OK

7	**Check the output voltage of heated oxygen sensor during idling.**

PREPARATION:

Warm up the oxygen sensor the engine at 2,500 rpm for approx. 90 sec.

CHECK:

Use the OBD II scan tool or TOYOTA hand–held tester read the output voltage of the heated oxygen sensor during idling.

OK:

Oxygen sensor output voltage:

Alternates repeatedly between less than 0.4 V and more than 0.55 V (See the following table).

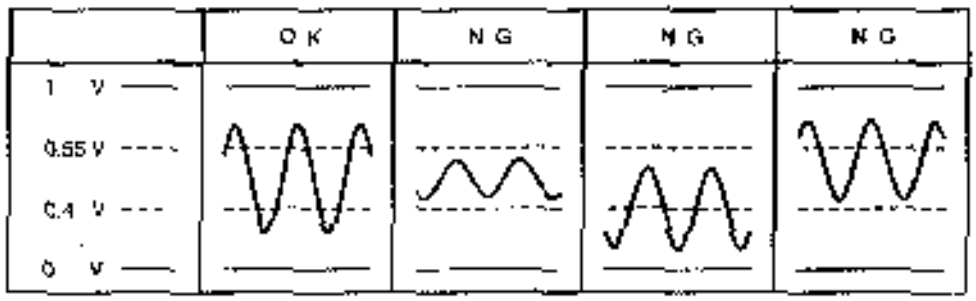

P18349

OK → **Go to step 9.**

NG

8	Check for open and short in harness and connector between ECM and heated oxygen sensor (See page IN–30).

NG → Repair or replace harness or connector.

OK →

Replace heated oxygen sensor.

9	Perform confirmation driving pattern (See page DI–50).

GO →

10	Is there DTC P0171 being output again?

YES → Check and replace ECM.

NO →

11	Did vehicle runs out of fuel in the past?

NO → Check for intermittent problems.

YES →

DTC P0171 or P0172 is caused by running out of fuel.

DI6V8–03

DTC	P0300	Random/Multiple Cylinder Misfire Detected

DTC	P0301	Cylinder 1 Misfire Detected

DTC	P0302	Cylinder 2 Misfire Detected

DTC	P0303	Cylinder 3 Misfire Detected

DTC	P0304	Cylinder 4 Misfire Detected

CIRCUIT DESCRIPTION

Misfire: The ECM uses the crankshaft position sensor and camshaft position sensor to monitor changes in the crankshaft rotation for each cylinder.
The ECM counts the number of times the engine speed change rate indicates that misfire has occurred. And when the misfire rate equals or exceeds the count indicating that the engine condition has deteriorated, the MIL lights up.
If the misfire rate is high enough and the driving conditions will cause catalyst overheating, the MIL blinks when misfiring occurs.

DTC No.	DTC Detecting Condition	Trouble Area
P0300 P0301 P0302 P0303 P0304	Misfiring of random cylinders is detected during any particular 200 or 1,000 revolutions For any particular 200 revolutions for the engine, misfiring is detected which can cause catalyst overheating (This causes MIL to blink)	• Open or short in engine wire • Connector connection • Vacuum hose connection • Ignition system • Injector • Fuel pressure • Manifold absolute pressure sensor • Engine coolant temp. sensor • Compression pressure • Valve clearance • Valve timing • ECM

HINT:

- When the 2 or more codes for a misfiring cylinder are recorded repeatedly but no random misfire code is recorded, it indicates that the misfires were detected and recorded at different times.
- There is a case where the cylinder other than memorized has an accidental fire (the cylinder which is one ahead of fired cylinder), so. at the time of checking all the checking items and if there is no abnormality, check the cylinder which is different from the recorded cylinder as fired.

WIRING DIAGRAM

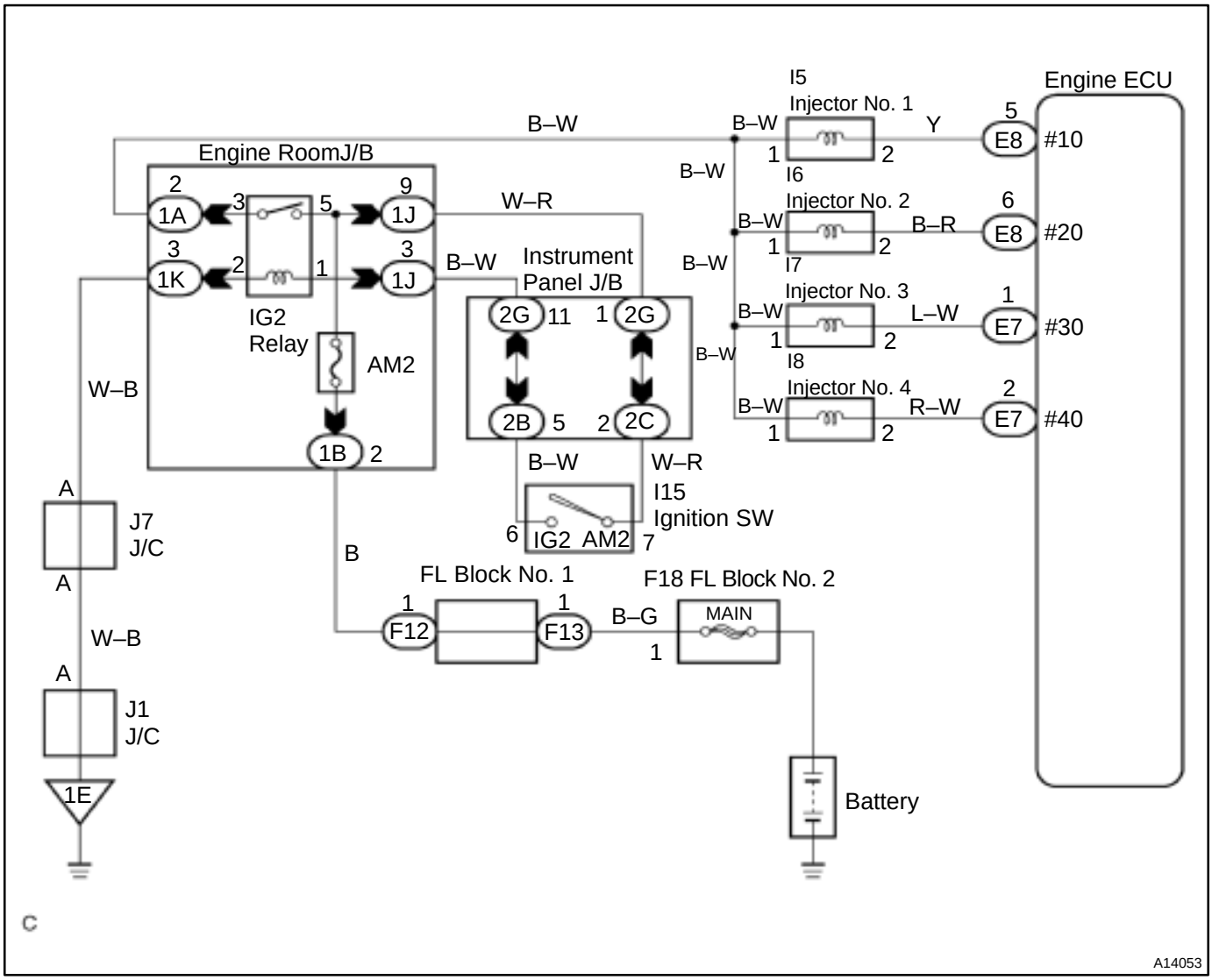

CONFIRMATION DRIVING PATTERN

(a) Connect the TOYOTA hand–held tester or OBD II scan tool.
(b) Record DTC and the freeze frame data.
(c) Use the TOYOTA hand–held tester to set to Check Mode. (See page DI–3)
(d) Drive the vehicle several times with the engine speed, load and its surrounding range shown with ENGINE SPD, CALC LOAD in the freeze frame data or MISFIRE RPM, MISFIRE LOAD in the data list. If you have no TOYOTA hand–held tester, turn the ignition switch OFF after the symptom is simulated the first time. Then repeat the simulation process again.

HINT:
In order to memorize DTC of misfire, it is necessary to drive around MISFIRE RPM, MISFIRE LOAD in the data list for the following period of time.

Engine Speed	Time
1000 rpm	3 minutes or more
2000 rpm	1 minute 30 seconds or more
3000 rpm	1 minute or more

(e) Check whether there is misfire or not by monitoring DTC and the freeze frame data. After that, record them.

(f) Turn ignition switch OFF and wait at least 5 seconds.

INSPECTION PROCEDURE

HINT:

- If is the case that DTC besides misfire is memorized simultaneously, first perform the troubleshooting for them.
- Read freeze frame data using TOYOTA hand–held tester or OBD II scan tool. Because freeze frame data records the engine conditions when the malfunction is detected, when troubleshooting it is useful for determining whether the vehicle was running or stopped, the engine warmed up or not, the air–fuel ratio lean or rich, etc. at the time of the malfunction.
- When the vehicle is brought to the workshop and the misfire is not occurred, misfire can be confirmed by reproducing the condition or freeze frame data. Also, after finishing the repair, confirm that there is no misfire. (See the confirmation driving pattern)
- When either of SHORT FT #1, LONG FT #1, SHORT FT #2 or LONG FT #2 in the freeze frame data is besides the range of ±20%, there is a possibility that the air–fuel ratio is inclining either to ”rich” (–20% or less) or ”lean” (+20% or more).
- When COOLANT TEMP in the freeze frame data is less than 80˚C (176˚F), there is a possibility or misfire only during warming up.
- In the case that misfire cannot be reproduced, the reason may be because of the driving with lack or fuel, the use of improper fuel, a stain of ignition plug, and etc.

1	**Check wire harness, connector and vacuum hose in engine room.**

CHECK:

(a) Check the connection conditions of wire harness and connector.

(b) Check the disconnection, piping and break of vacuum hose.

NG → **Repair or replace, then confirm that there is no misfire. (See the confirmation driving pattern)**

OK

2	**Check spark plug and spark of misfiring cylinder.**

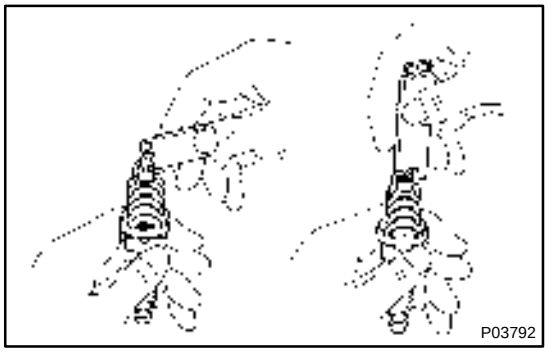

PREPARATION:

Remove the spark plug (See page IG–1).

CHECK:

(a) Check for carbon deposits on electrode.

(b) Check electrode gap.

OK:

(a) No large carbon deposit present.
Not wet with gasoline or oil.
(b) Electrode gap: 1.0 – 1.2 mm (0.039 – 0.047 in.)

PREPARATION:

(a) Install the spark plug to ignition coil and connect the ignition coil connector to ignition coil.

(b) Disconnect the injector connector.
(c) Ground spark plug.

CHECK:

Check if spark occurs while engine is being cracked.

NOTICE:

To prevent excess fuel being injected from the injectors during this test, don't crank the engine for more than 5 – 10 seconds at a time.

OK:

Spark jumps across electrode gap.

NG	Replace or check ignition system (See page IG–1).

OK

3	Check voltage of ECM terminal for injector of failed cylinder.

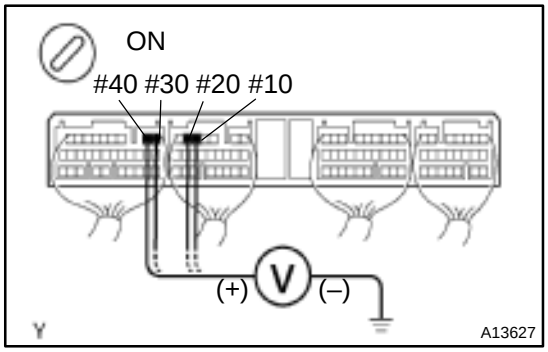

PREPARATION:

(a) Remove the ECM with connector still connected (See page SF–62).
(b) Turn the ignition switch ON.

CHECK:

Measure voltage between applicable terminal of the ECM connector and body ground.

OK:

Voltage: 9 – 14 V

Reference: INSPECTION USING OSCILLOSCOPE
INJECTOR SIGNAL WAVEFORM

With the engine idling, measure between terminals #10 ~ #40 and E01 of the ECM connector.

HINT:

The correct waveforms are shown.

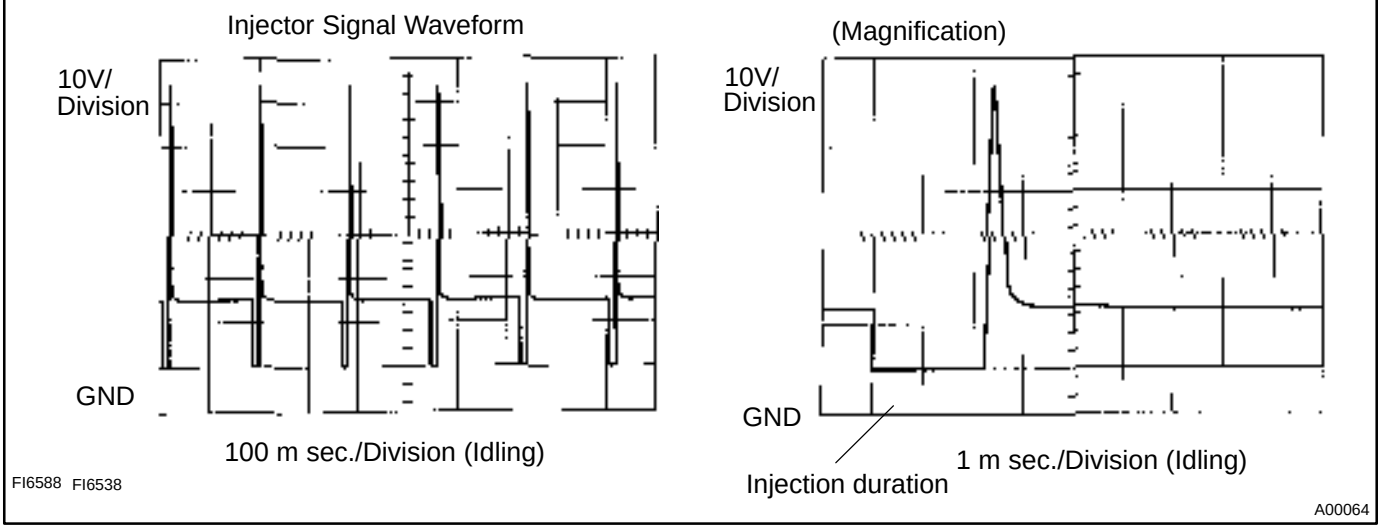

OK → Go to step 5.

NG

4	Check resistance of injector of misfiring cylinder (See page SF–9).

NG → Replace injector.

OK

Check for open and short in harness and connector between injector and ECM (See page IN–41).

5	Check fuel pressure (See page SF–6).

NG → Check and repair fuel pump and fuel pipe line (See page SF–1).

OK

6	Check injector injection (See page SF–12).

NG → Replace injector.

OK

7	Check mass air flow merer and engine coolant temp. sensor (See page SF–22 and SF–49).

NG → Repair or replace.

OK

Check compression pressure, valve clearance and valve timing (See page EM–3, EM–5, EM–21).

DI6V9–02

DTC	P0325	Knock Sensor 1 Circuit Malfunction

CIRCUIT DESCRIPTION

The knock sensor is fitted to the cylinder block to detect engine knocking. This sensor contains a piezoelectric element which generates a voltage when it becomes deformed, which occurs when the cylinder block vibrates due to knocking. If engine knocking occurs, ignition timing is retarded to suppress it.

DTC No.	DTC Detecting Condition	Trouble Area
P0325	No knock sensor 1 signal to ECM with engine speed, 2,000 rpm or more	• Open or short in knock sensor 1 circuit • Knock sensor 1 (looseness) • ECM

HINT:
If the ECM detects above diagnosis conditions, it operates the fail safe function in which the corrective retard angle value is set to the maximum value.

WIRING DIAGRAM

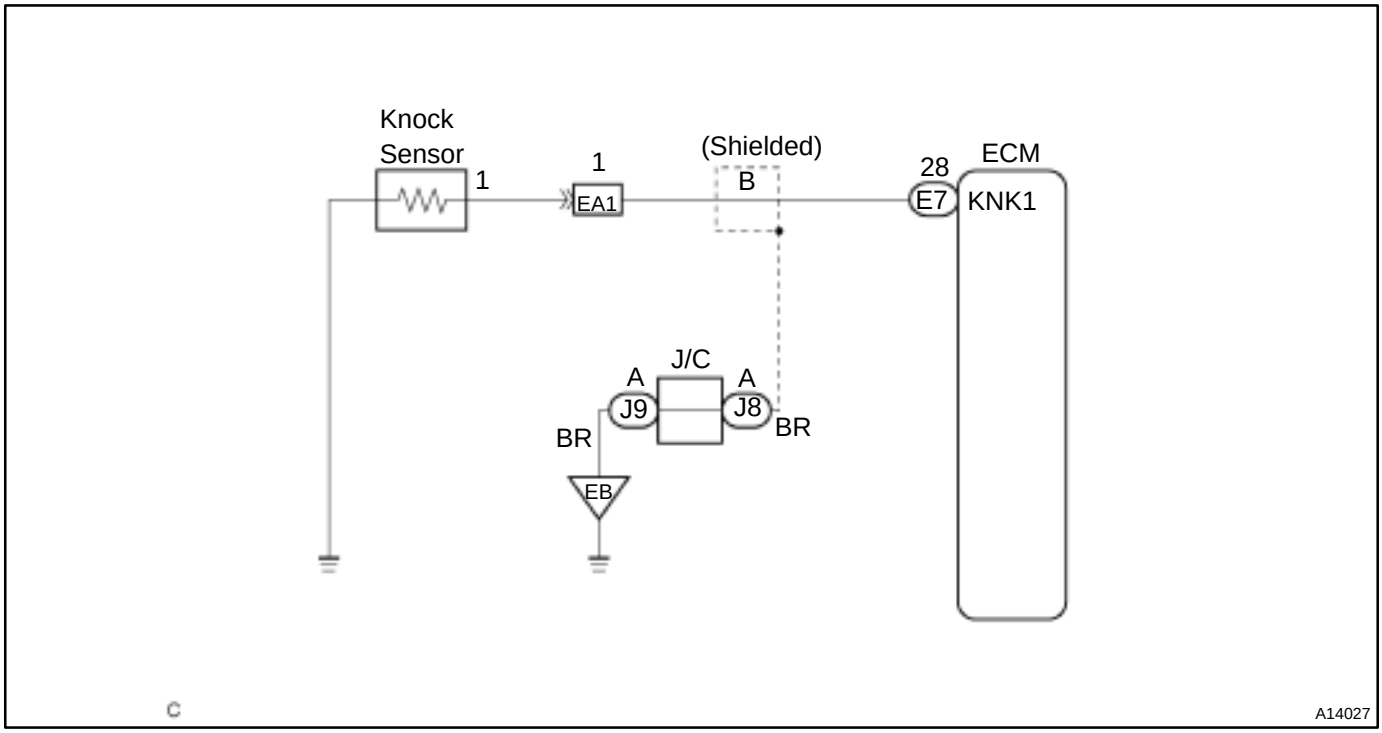

INSPECTION PROCEDURE

HINT:
Read freeze frame data using TOYOTA hand–held tester or OBD II scan tool. Because freeze frame records the engine conditions when the malfunction is detected, when troubleshooting it is useful for determining whether the vehicle was running or stopped, the engine warmed up or not, the air–fuel ratio lean or rich, etc. at the time of the malfunction.

1	**Check continuity between terminal KNK1 of ECM connector and body ground.**

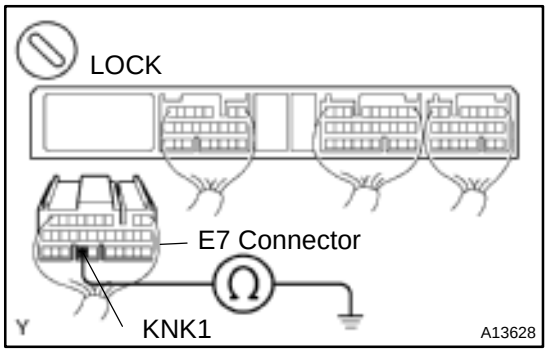

PREPARATION:
(a) Remove the ECM with connector still connected (See page SF–62).
(b) Disconnect the E7 connector of the ECM.

CHECK:
Measure resistance between terminal KNK1 of the ECM connector and body ground.

OK:
Resistance: 1 MΩ or higher

OK	**Go to step 3.**

NG

2	**Check knock sensor (See page SF–56).**

NG	**Replace knock sensor.**

OK

3	**Check for open and short in harness and connector between ECM and knock sensor (See page IN–41).**

NG	**Repair or replace harness or connector.**

OK

4	**Does malfunction disappear when a good knock sensor is installed?**

YES → **Replace knock sensor.**

NO

Check and replace ECM (See page IN–41).

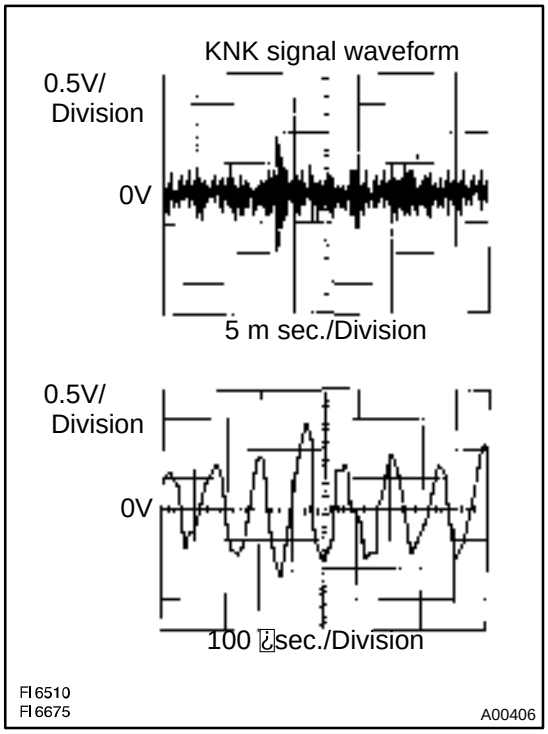

Reference: INSPECTION USING OSCILLOSCOPE

- With the engine racing (4,000 rpm) measure between terminal KNK of the ECM connector and body ground.

HINT:
The correct waveforms are as shown.

- Spread the time on the horizontal axis, and confirm that period of the wave is 132 µ sec.
  (Normal mode vibration frequency of knock sensor: 8.1 kHz)

HINT:
If normal mode vibration frequency is not 8.1 kHz the sensor is malfunctioning.

DI6VA–02

DTC	P0335	Crankshaft Position Sensor ”A” Circuit Malfunction

CIRCUIT DESCRIPTION

Crankshaft position sensor (NE signal) consist of a signal plate and pick up coil.
The NE signal plate has 34 teeth and is mounted on the crankshaft. The NE signal sensor generates 34 signals of every engine revolution. The ECM detects the standard crankshaft angle based on the G2 signals, and the actual crankshaft angle the engine speed by the NE signals.

DTC No.	DTC Detecting Condition	Trouble Area
P0335	No crankshaft position sensor signal to ECM during cranking. (2 trip detection logic)	• Open or short in crankshaft position sensor circuit. • Crankshaft position sensor • Signal plate (Timing belt guide) • Crankshaft timing pulley • ECM
	No crankshaft position sensor signal to ECM with engine speed 600 rpm or more (2 trip detection logic)	

WIRING DIAGRAM

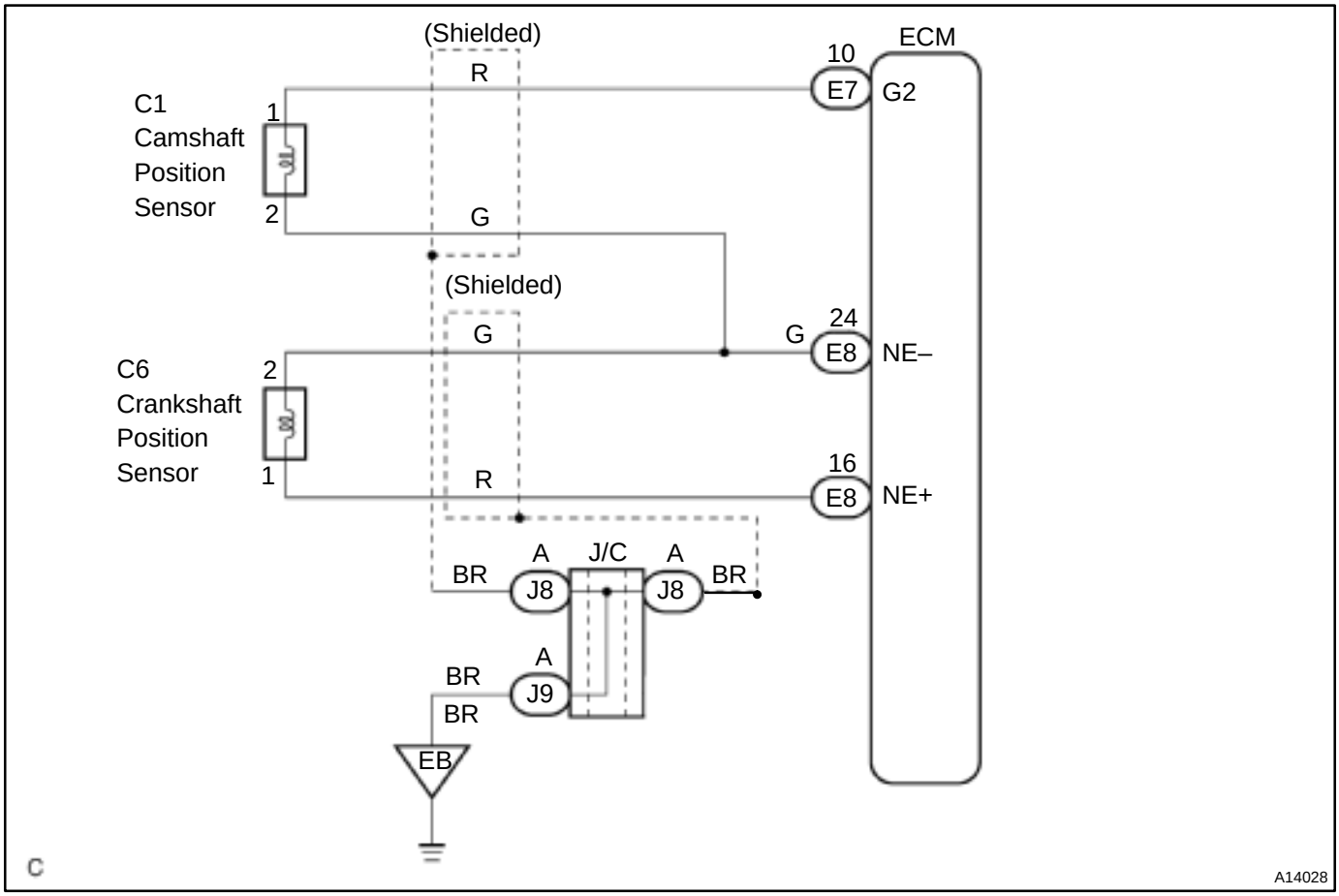

INSPECTION PROCEDURE

HINT:

- Perform troubleshooting of DTC 335 1st. If notrouble is found, troubleshoot the following mechanical system.
- Read freeze frame data using TOYOTA hand–held tester or OBD II scan tool. Because freeze frame records the engine conditions when the malfunction is detected, when troubleshooting it is useful for determining whether the vehicle was running or stopped, the engine warmed up or not, the air–fuel ratio lean or rich, etc. at the time of the malfunction.

1	**Check resistance of crankshaft position sensor (See page IG–1).**

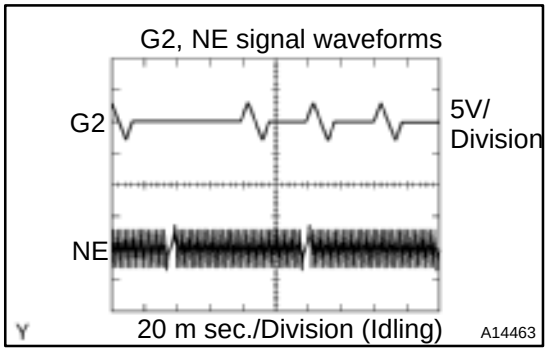

Reference: INSPECTION USING OSCILLOSCOPE
During cranking or idling, check between terminals G2 and NE–, NE and NE– of the ECM
HINT:
The correct waveforms are as shown.

NG → **Replace crankshaft position sensor.**

OK

2	**Check for open and short in harness and connector between ECM and crankshaft position sensor (See page IN–41).**

NG → **Repair or replace harness or connector.**

OK

3	**Inspect crankshaft position sensor installation and teeth of crankshaft timing pulley (See page IG–11 and EM–13).**

NG → **Tighten the sensor.**
Replace crankshaft timing pulley.

OK

Check and replace ECM (See page IN–41).

DTC	P0340	Camshaft Position Sensor Circuit Malfunction

CIRCUIT DESCRIPTION

Camshaft position sensor (G22 signal) consist of signal plate and pick up coil.
The G22 signal plate has one tooth on its outer circumference and is mounted on the exhaust camshaft. When the camshafts rotate, the protrusion on the signal plate and the air gap on the pick up coil change, causing fluctuations in the magnetic field and generating an electromotive force in the pick up coil.
The NE signal plate has 34 teeth and is mounted on the crankshaft. The NE signal sensor generates 34 signals for every engine revolution. The ECM detects the standard crankshaft angle based on the G22 signals and the actual crankshaft angle and the engine speed by the NE signals.

DTC No.	DTC Detecting Condition	Trouble Area
P0340	No camshaft position sensor signal to ECM during cranking. (2 trip detection logic)	• Open or short in camshaft position sensor circuit • Camshaft position sensor • Camshaft timing pulley • ECM
	No camshaft position sensor signal to ECM with engine speed 600 rpm or more	

WIRING DIAGRAM

Refer to DTC P0335 on page DI–74.

INSPECTION PROCEDURE

HINT:
Read freeze frame data using TOYOTA hand–held tester or OBD II scan tool. Because freeze frame records the engine conditions when the malfunction is detected, when troubleshooting it is useful for determining whether the vehicle was running or stopped, the engine warmed up or not, the air–fuel ratio lean or rich, etc. at the time of the malfunction.

1	**Check resistance of camshaft position sensor (Signal generator) (See page IG–1).**

Reference: INSPECTION USING OSCILLOSCOPE
Refer to DTC P0335 on page DI–74 for the INSPECTION USING OSCILLOSCOPE.

NG → **Replace camshaft position sensor.**

OK

2	**Check for open and short in harness and connector between ECM and camshaft position sensor (See page IN–41).**

NG → **Repair or replace harness or connector.**

OK

3	**Inspect sensor installation and tooth of camshaft timing pulley (See page EM–15).**

NG → **Tighten the sensor.**
Replace camshaft timing pulley.

OK

Check and replace ECM (See page IN–41).

DI6VC–02

DTC	P0420	Catalyst System Efficiency Below Threshold

CIRCUIT DESCRIPTION

The ECM compares the waveform of the oxygen sensor located before the catalyst with the waveform of the oxygen sensor located behind the catalyst to determine whether or not catalyst performance has deteriorated.
Air–fuel ratio feedback compensation keeps the waveform of the oxygen sensor before the catalyst repeatedly changing back and forth from rich to lean.
If the catalyst is functioning normally, the waveform of the oxygen sensor behind the catalyst switches back and forth between rich and lean much more slowly than the waveform of the oxygen sensor before the catalyst.
But when both waveforms change at a similar rate, it indicates that catalyst performance has deteriorated.

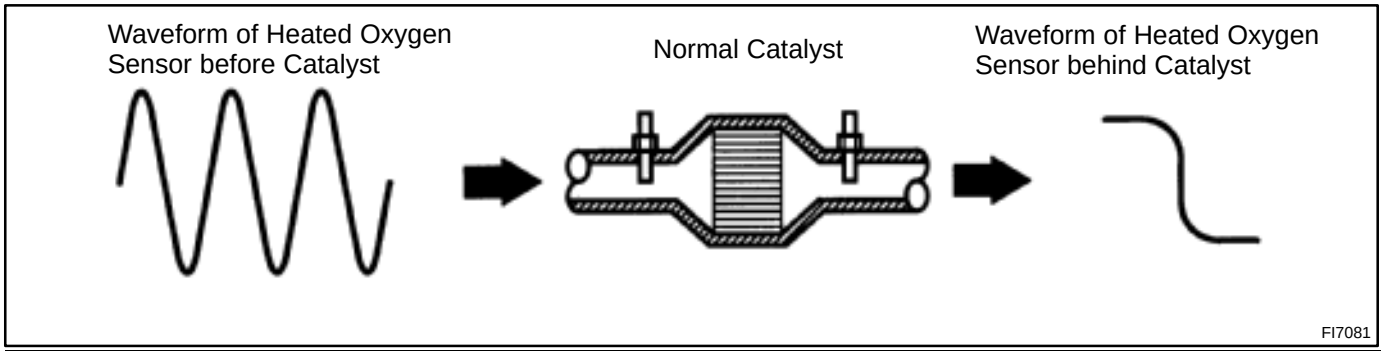

DTC No.	DTC Detecting Condition	Trouble Area
P0420	After the engine and the catalyst are warmed up, and while the vehicle is driven within the set vehicle and engine speed range, the waveforms of the oxygen sensors (bank 1 sensor 1 and bank 1 sensor 2) have the same amplitude (2 times detection logic)	• Gas leakage on exhaust system • Open or short in heated oxygen sensor circuit • Heated oxygen sensor • Three–way catalytic converter

CONFIRMATION DRIVING PATTERN

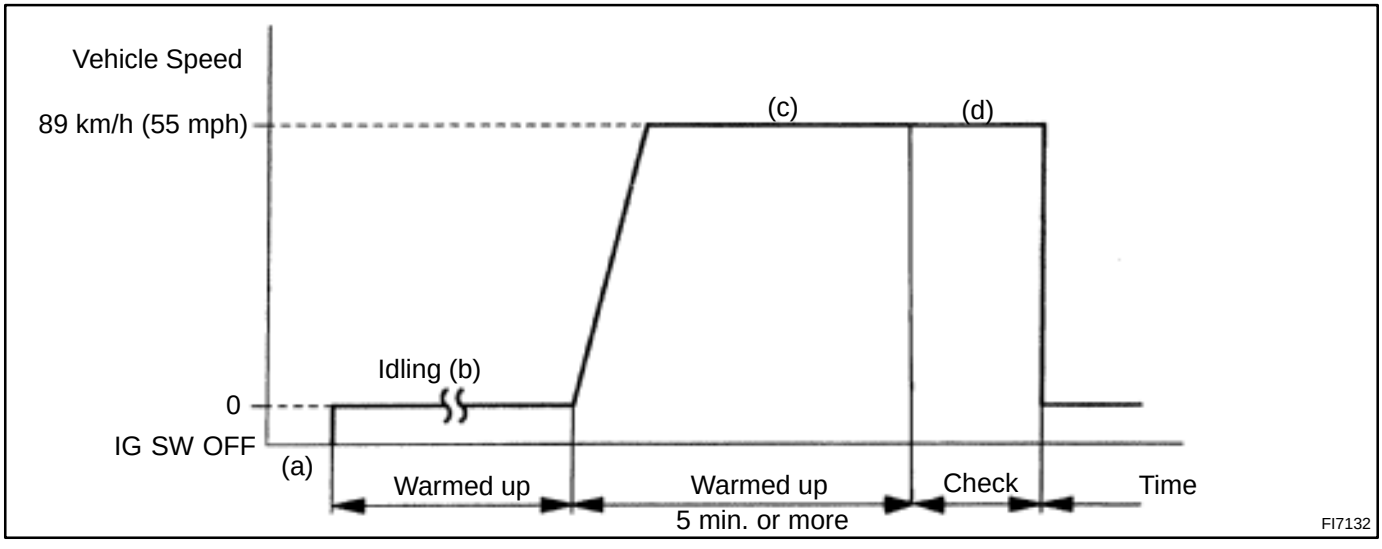

(a) Connect the TOYOTA hand–held tester to the DLC3, or connect the probe of the oscilloscope between terminals OX1, OX2 and E1 of the ECM connector.
(b) Start engine and warm it up with all accessories switched OFF until water temp. is stable.

(c) Drive the vehicle at 89 km/h (55 mph) or more for 5 min. or more.
(d) After confirming that the waveforms of the oxygen sensor, bank 1 sensor 1 (OX1), oscillate around 0.5 V during feedback to the ECM, check the waveform of the oxygen sensor, bank 1 sensor 2 (OX2).

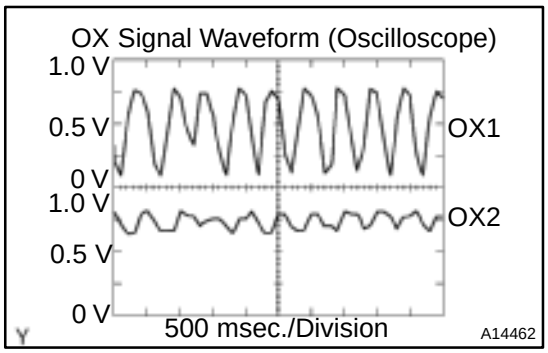

HINT:

- If there is a malfunction in the system, the waveform of the oxygen sensor, bank 1 sensor 2 (OX2),is shown on the left.
- There are some cases where, even though a malfunction exists, the MIL may either light up or not light up.
- Normal waveform of OX2 is a smooth line of 0.6 to 0.7 V.

INSPECTION PROCEDURE

HINT:
Read freeze frame data using TOYOTA hand–held tester or OBD II scan tool. Because freeze frame records the engine conditions when the malfunction is detected, when troubleshooting it is useful for determining whether the vehicle was running or stopped, the engine warmed up or not, the air–fuel ratio lean or rich, etc. at the time of the malfunction.

1	**Are there any other codes (besides DTC P0420) being output?**

YES → **Go to relevant DTC chart.**

NO

2	**Check gas leakage on exhaust system.**

NG → **Repair or replace.**

OK

3	**Check for open and short in harness and connector between heated oxygen sensor (bank 1 sensor 1, 2) and ECM.**

NG → **Repair or replace harness or connector.**

OK

4	Check oxygen sensor (bank 1 sensor 1) (See page DI–50).

NG → Repair or replace.

OK

5	Check oxygen sensor (bank 1 sensor 2) (See page DI–59).

NG → Repair or replace.

OK

Replace three–way catalytic converter.

DTC	P0440	Evaporative Emission Control System Malfunction

CIRCUIT DESCRIPTION

The vapor pressure sensor, VSV for canister closed valve (CCV) and VSV for purge flow switching valve are used to detect abnormalities in the evaporative emission control system.
The ECM decides whether there is an abnormality in the evaporative emission control system based on the vapor pressure sensor signal.
DTC P0440 is recorded by the ECM when evaporative emissions leak from the components or when the vapor pressure sensor malfunctions.

Fig. 1

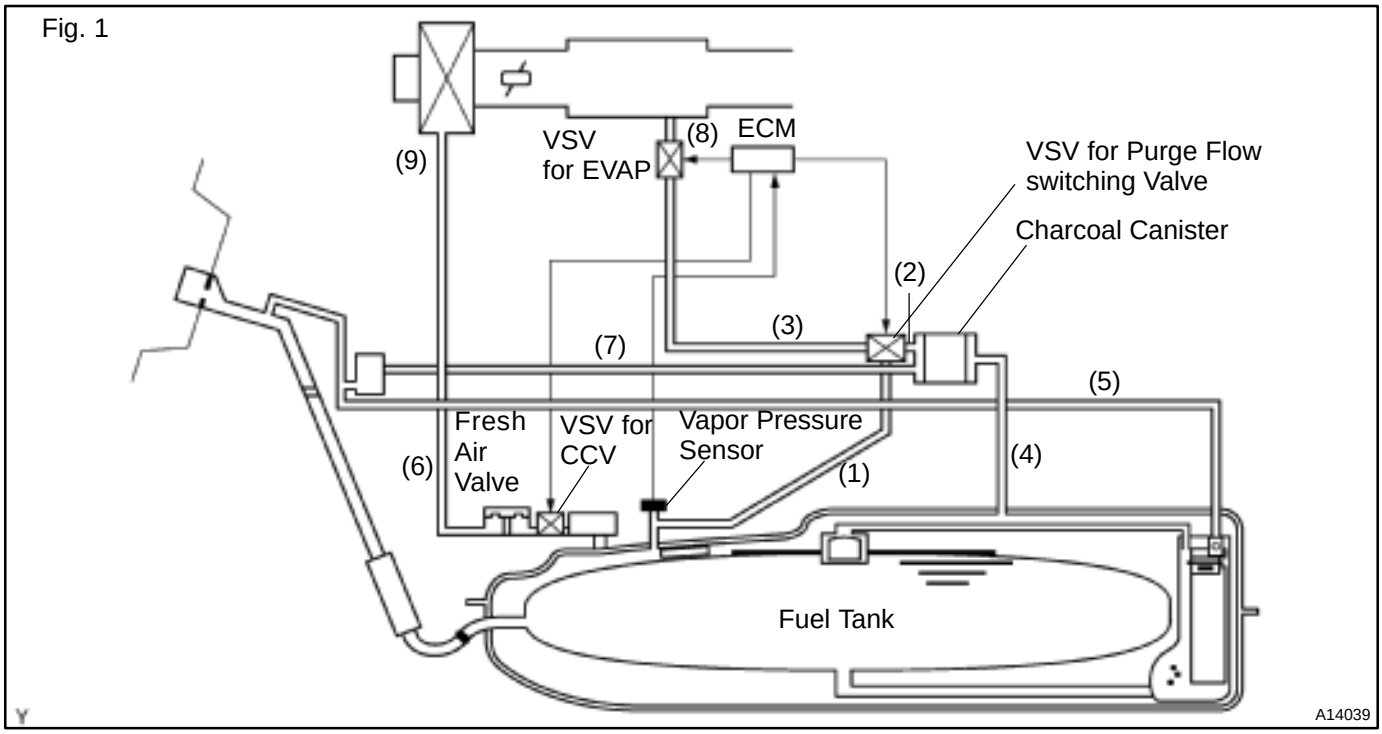

DTC No.	DTC Detecting Condition	Trouble Area
P0440	When the vacuum applied to the sealed tank cannot be kept for a fixed time.	• Hose or tube cracked, hole, damaged or loose seal ((3) and (4) in Fig. 1) • Fuel tank cap incorrectly installed • Fuel tank cap cracked or damaged • Vacuum hose cracked, holed, blocked, damaged or disconnected ((1) (2) and (3) in Fig. 1) • Fuel tank cracked, holed or damaged • Charcoal canister cracked, holed or damaged • Open or short in vapor pressure sensor circuit • Vapor pressure sensor • ECM

WIRING DIAGRAM

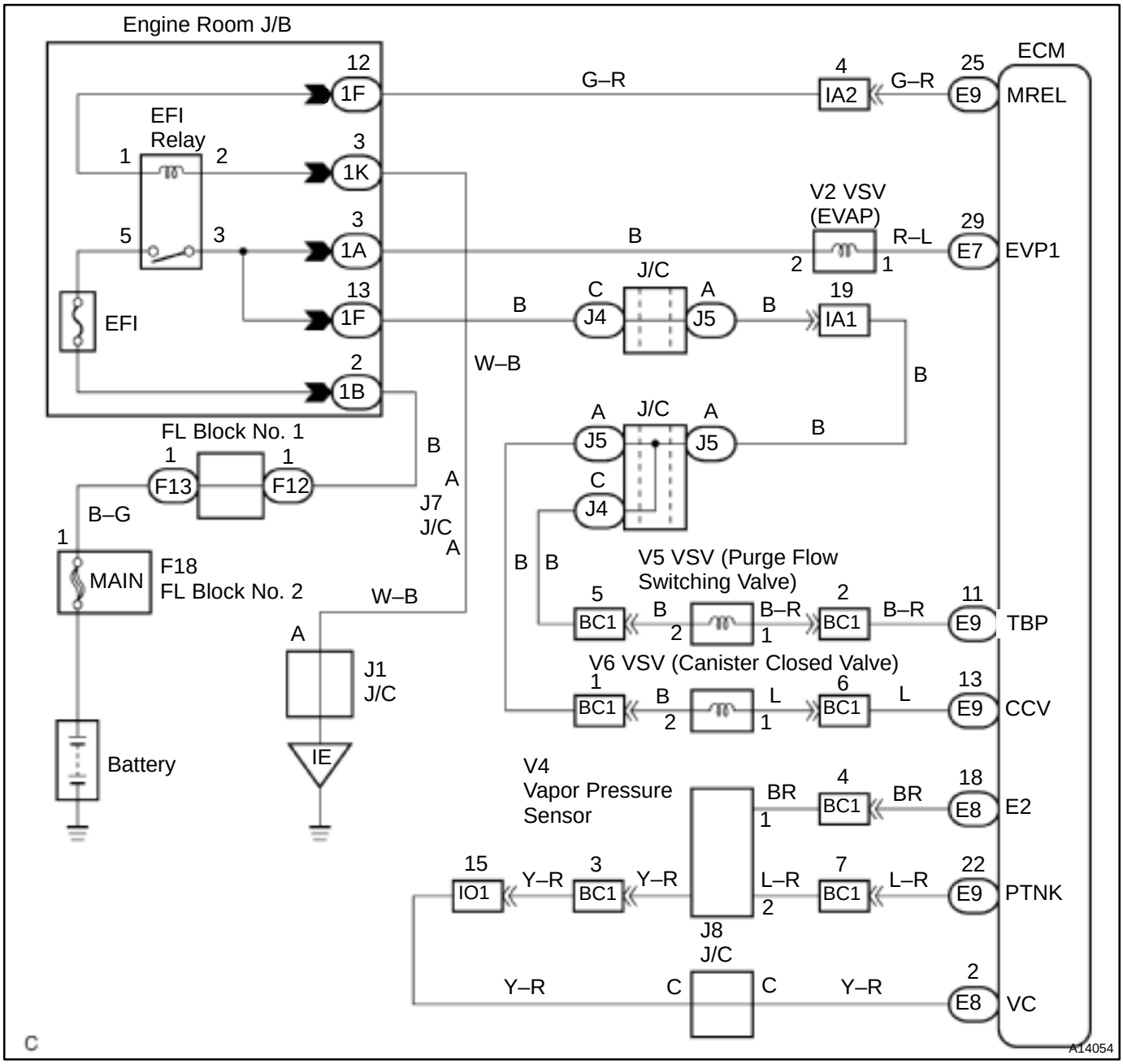

INSPECTION PROCEDURE

HINT:

- If DTC P0441, P0446, P0450 or P0451 is output after DTC P0440, first troubleshoot DTC P0441, P0446, P0450 or P0451. If no malfunction is detected, troubleshoot DTC P0440 next.
- Ask the customer whether, after the MIL came on, the customer found the fuel tank cap loose and tightened it. Also ask the customer whether the fuel tank cap was loose when refuelling. If the fuel tank cap was loose, it was the cause of the DTC. If the fuel tank cap was not loose or if the customer was not sure if it was loose, troubleshoot according to the following procedure.
- Read freeze frame data using TOYOTA hand–held tester or OBD II scan tool. Because freeze frame records the engine conditions when the malfunction is detected. When troubleshooting, it is useful for determining whether the vehicle was running or stopped, the engine was warmed up or not, the air–fuel ratio was lean or rich, etc. at the time of the malfunction.

- When the ENGINE RUN TIME in the freeze frame data is less than 200 seconds, carefully check the VSV for EVAP, charcoal canister and vapor pressure sensor.

1	**Check whether hose close to fuel tank have been modified, and check whether there are signs of any accident near fuel tank or charcoal canister.**

CHECK:

Check for cracks, deformation and loose connection of the following parts:

- Fuel tank
- Charcoal canister
- Fuel tank filler pipe
- Hoses and tubes around fuel tank and charcoal canister

NG → **Repair or replace.**

OK

2	**Check that fuel tank cap is TOYOTA genuine parts.**

NG → **Replace to TOYOTA genuine parts.**

OK

3	**Check that fuel tank cap is correctly installed.**

NG → **Correctly install fuel tank cap.**

OK

4	**Check fuel tank cap (See page EC–7).**

NG → **Replace fuel tank cap.**

OK

5	**Check filler neck for damage.**

PREPARATION:
Remove the fuel tank cap.
CHECK:
Visually inspect the filler neck for damage.

NG → **Replace filler pipe.**

OK

6	**Check vacuum hoses ((1), (2) and (3) in Fig. 1 in circuit description).**

CHECK:
(a) Check that the vacuum hose is connected correctly.
(b) Check the vacuum hose for looseness and disconnection.
(c) Check the vacuum hose for cracks, hole and damage.

NG → **Repair or replace.**

OK

7	**Check hose and tube around fuel tank and charcoal canister.**

CHECK:
(a) Check for proper connection ((4), (5), (6) and (7) in Fig. 1 in circuit description).
(b) Check the hose and tube for cracks, hole and damage.

NG → **Repair or replace.**

OK

8	**Check charcoal canister for cracks, hole and damage (See page EC–7).**

NG → **Replace charcoal canister.**

OK

9	Check voltage between terminals VC and E2 of ECM connector.

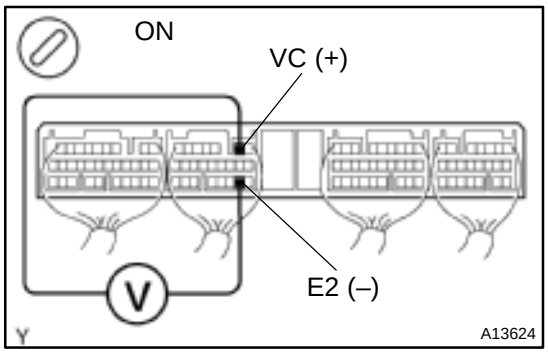

CHECK:

(a) Remove the ECM with connector still connected (See page SF–62).

(b) Turn the ignition switch ON.

CHECK:

Measure the voltage between terminals VC and E2 of the ECM connector.

OK:

Voltage: 4.5 – 5.5 V

NG	Check and replace ECM (See page IN–41).

OK

10	Check voltage between terminals PTNK and E2 of ECM connectors.

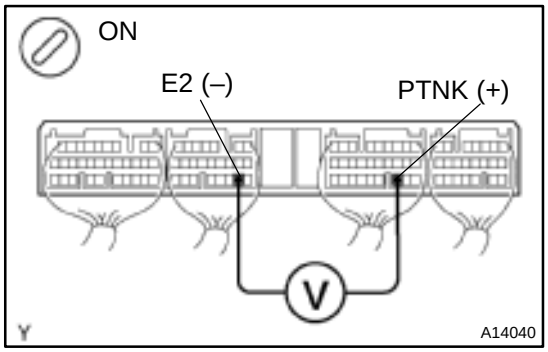

PREPARATION:

(a) Remove the ECM with connector still connected (See page SF–62).

(b) Remove the fuel tank cap.

(c) Turn the ignition switch ON.

CHECK:

Measure the voltage between terminals PTNK and E2 of the ECM connectors.

OK:

Voltage: 3.0 – 3.6 V

OK	Go to step 12.

NG

11	Check for open and short in harness and connector between vapor pressure sensor and ECM (See page IN–41).

NG	Repair or replace harness or connector.

OK

Replace vapor pressure sensor.

12	**Check fuel tank and fuel tank over fill check valve for cracks and damage.**

NG → **Replace fuel tank or fuel tank over fill check valve.**

OK

It is likely that vehicle user did not properly close fuel tank cap. Please explain to customer how to properly install fuel tank cap.

DTC	P0441	Evaporative Emission Control System Incorrect Purge Flow

DTC	P0446	Evaporative Emission Control System Vent Control Malfunction

CIRCUIT DESCRIPTION

The vapor pressure sensor, VSV for canister closed valve (CCV), VSV for purge flow switching valve are used to detect abnormalities in the evaporative emission control system.

The ECM decides whether there is an abnormality in the evaporative emission control system based on the vapor pressure sensor signal.

DTCs P0441 and P0446 are recorded by the ECM when evaporative emissions leak from the components. 1 below, or when there is a malfunction in either the VSV for EVAP, the VSV for purge flow switching valve, the VSV for CCV or in the vapor pressure sensor itself.

Fig. 1

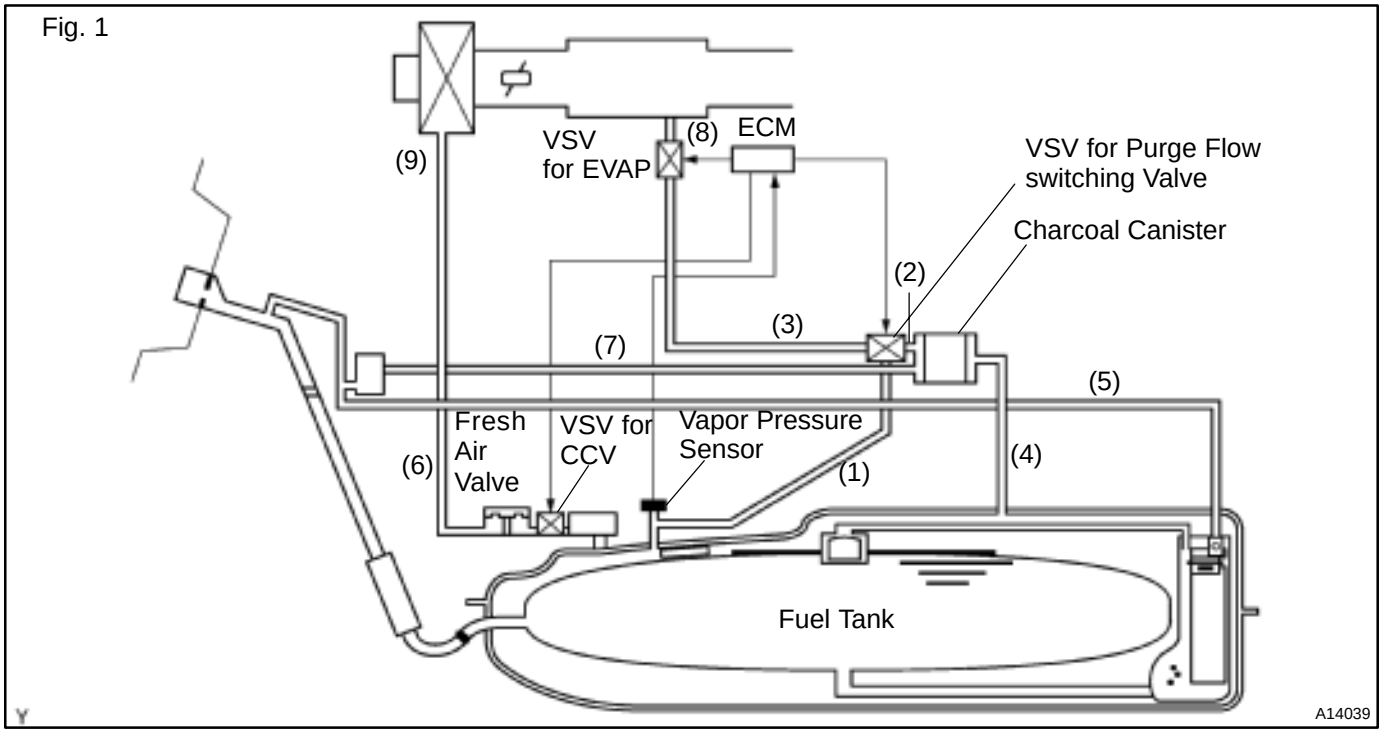

DTC No.	DTC Detecting Condition	Trouble Area
P0441	Pressure in fuel tank does not drop during purge control (2 trip detection logic)	• Open or short in vapor pressure sensor circuit • Vapor pressure sensor • Open or short in VSV circuit for EVAP • VSV for EVAP • Open or short in VSV circuit for purge flow switching valve • VSV for purge flow switching valve • Charcoal canister cracked, hole or damaged • Open or short in VSV circuit for CCV • VSV for CCV • ECM
	During purge cut–off, pressure in fuel tank is very low compared with atmospheric pressure (2 trip detection logic)	
P0446	When VSV for CCV is ON, pressure in fuel tank is maintained at atmospheric pressure (2 trip detection logic)	
	Turning the VSV for purge flow switching valve is ON does not lower the pressure sensor output.	
	Although the VSV for purge flow switching valve is OFF, fluctuation in the pressure sensor output is great.	
	Turning the VSV for CCV OFF does not charge the pressure sensor output.	

WIRING DIAGRAM

Refer to DTC P0440 on page DI–81.

INSPECTION PROCEDURE

HINT:

- If DTC P0441, P0446, P0450 or P0451 is output after DTC P0440,first troubleshoot DTC P0441, P0446, P0450 or P0451. If no malfunction is detected, troubleshoot DTC P0440 next.
- Read freeze frame data using TOYOTA hand–held tester or OBD II scan tool. Because freeze frame records the engine conditions when the malfunction is detected. When troubleshooting, it is useful for determining whether the vehicle was running or stopped, the engine was warmed up or not, the air–fuel ratio was lean or rich, etc. at the time of the malfunction.
- When the ENGINE RUN TIME in the freeze frame data is less than 200 seconds, carefully check the VSV for EVAP, charcoal canister and vapor pressure sensor.

TOYOTA hand–held tester:

1	**Check whether hose close to fuel tank have been modified, and check whether there are signs of any accident near fuel tank or charcoal canister (See page DI–81).**

NG → **Repair or replace.**

OK

2	**Check that fuel tank cap is TOYOTA genuine parts.**

NG → **Replace to TOYOTA genuine parts.**

OK

3	Check that fuel tank cap is correctly installed.

NG → Correctly install fuel tank cap.

OK

4	Check fuel tank cap (See page EC–7).

NG → Replace fuel tank cap.

OK

5	Check filler neck for damage.

NG → Replace filler pipe.

OK

6	Check vacuum hoses ((1), (2) and (3) in Fig. 1 in circuit description.

NG → Repair or connect VSV or sensor connector.

OK

7	Check hose and tube around fuel tank and charcoal canister (See page DI–81).

NG → Repair or replace.

OK

8	**Check VSV connector for EVAP, VSV connector for CCV, VSV connector for purge flow switching valve and vapor pressure sensor connector for looseness and disconnection.**

NG → **Repair or connect VSV or sensor connector.**

OK

9	**Check vacuum hoses ((4), (5), (6) and (7) in Fig. 1 in circuit description).**

CHECK:

(a) Check that the vacuum hose is connected correctly.
(b) Check the vacuum hose for looseness and disconnection.
(c) Check the vacuum hose for cracks, hole, damage and blockage.

NG → **Repair or replace.**

OK

10	**Check voltage between terminals VC and E2 of ECM connector (See page DI–81).**

NG → **Check and replace ECM (See page IN–41).**

OK

11	**Check voltage between terminals PTNK and E2 of ECM connectors (See page DI–81).**

OK → **Go to step 13.**

NG

12	Check for open and short in harness and connector between vapor pressure sensor and ECM (See page IN–41).

NG → Repair or replace harness or connector.

OK →

Replace vapor pressure sensor.

13	Check purge flow.

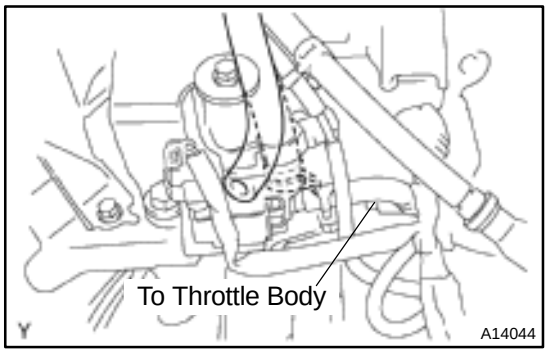

PREPARATION:

(a) Connect the TOYOTA hand–held tester to the DLC3.
(b) Select the ACTIVE TEST mode on the TOYOTA hand–held tester.
(c) Disconnect the vacuum hose from the VSV for the EVAP from the charcoal canister.
(d) Start the engine.

CHECK:

When the VSV for the EVAP is operated by the TOYOTA hand–held tester, check whether the disconnected hose applies suction to your finger.

OK:

VSV is ON:
Disconnected hose applies suction to your finger.
VSV is OFF:
Disconnected hose applies no suction to your finger.

OK → Go to step 16.

NG →

14	**Check vacuum hose between intake manifold and VSV for EVAP, and VSV for EVAP and charcoal canister.**

CHECK:

(a) Check that the vacuum hose is connected correctly.
(b) Check the vacuum hose for looseness and disconnection.
(c) Check the vacuum hose for cracks, hole, damage and blockage.

NG → **Repair or replace.**

OK

15	**Check operation of VSV for EVAP (See page SF–40).**

OK → **Go to step 16.**

NG

Replace VSV and charcoal canister,and then clean the vacuum hose between throttle body and VSV for EVAP, and VSV for EVAP and charcoal canister.

16	**Check for open and short in harness and connector between EFI main relay (Marking: EFI) and VSV for EVAP, and VSV for EVAP and ECM (See page IN–41).**

NG → **Repair or replace harness or connector.**

OK

Check and replace ECM (See page IN–41).

17	Check VSV for CCV.

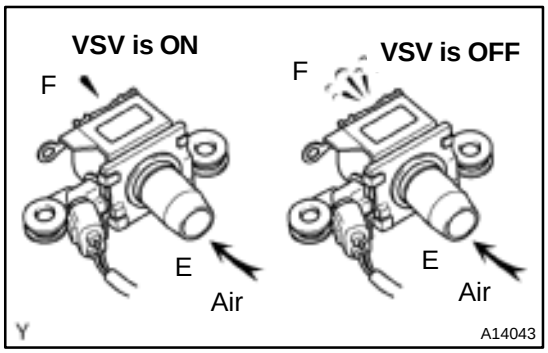

PREPARATION:

(a) Connect the TOYOTA hand–held tester to the DLC3.
(b) Remove the VSV for the CCV from the charcoal canister.
(c) Turn the ignition switch ON and push the TOYOTA hand–held tester main switch ON.
(d) Select the ACTIVE TEST mode on the TOYOTA hand–held tester.

CHECK:

Check the VSV operation when it is operated by the TOYOTA hand–held tester.

OK:

VSV is ON:
Air does not flow from port E to port F.
VSV is OFF:
Air from port E flows out through port F.

OK	Go to step 21.

NG

18	Check vacuum hose between VSV for CCV and fresh air valve.

CHECK:

(a) Check that the vacuum hose is connected correctly.
(b) Check the vacuum hose for looseness and disconnection.
(c) Check the vacuum hose for cracks, hole damage and blockage.

NG	Repair or replace.

OK

19	Check operation of VSV for CCV.

OK	Go to step 20.

NG

Replace VSV and charcoal canister, and then clean vacuum hose between charcoal canister and VSV for CCV.

20	**Check for open and short in harness and connector between EFI main relay (Marking: EFI) and VSV for CCV, and VSV for CCV and ECM (See page IN–41).**

NG → **Repair or replace harness or connector.**

OK

Check and replace ECM (See page IN–41).

21	**Connect TOYOTA hand–held tester and check operation of VSV purge flow switching valve.**

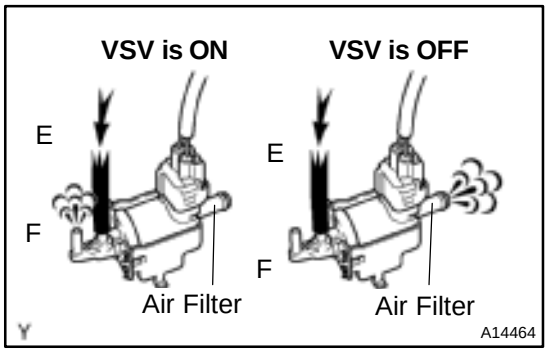

PREPARATION:

(a) Connect the TOYOTA hand–held tester to the DLC3.
(b) Turn the ignition switch ON and push the TOYOTA hand–held tester main switch ON.
(c) Select the ACTIVE TEST mode on the TOYOTA hand–held tester.

CHECK:

Check operation of VSV when VSV is operated by the TOYOTA hand–held tester.

OK:

VSV is ON:
Air from pipe E is flowing out through pipe F.
VSV is OFF:
Air from pipe E is flowing out through the air filter.

OK → **Go to step 24.**

NG

22	**Check VSV for purge flow switching valve (See page SF–45).**

NG → **Go to step 23.**

OK

Replace VSV and charcoal canister, and clean vacuum hoses ((1), (2) and (3) in Fig. 1 in circuit description.

23	**Check for open and short in harness and connector between EFI main relay (Marking: EFI) and VSV for purge flow switching valve, and VSV for purge flow switching valve and ECU (See page IN–41).**

NG → **Repair or replace harness or connector.**

OK

Check and replace ECM (See page IN–41).

24	**Check fuel tank and charcoal canister.**

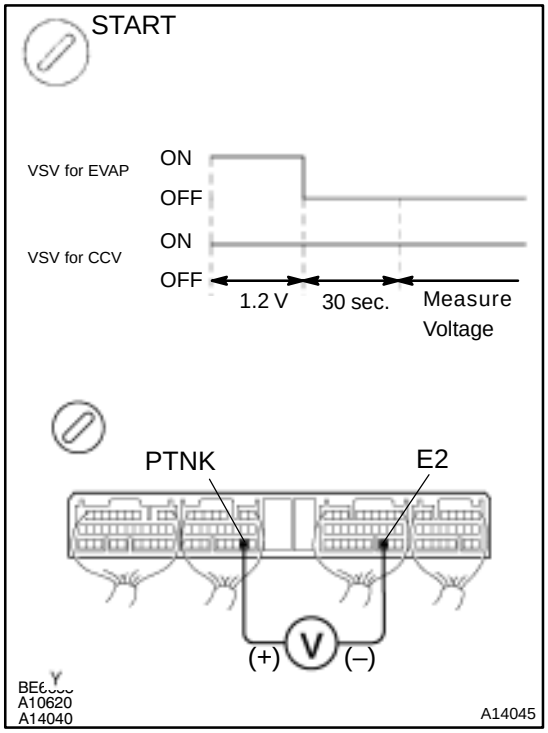

PREPARATION:

(a) Remove the connector cover from the ECM.
(b) Connect the TOYOTA hand–held tester to the DLC3.
(c) Select the ACTIVE TEST mode on the TOYOTA hand–held tester.
(d) Start the engine.
(e) The VSV for the CCV is ON by the TOYOTA hand–held tester.
(f) The VSV for the EVAP is ON by the TOYOTA hand–held tester and hold the VSV for EVAP until voltage between terminals PTNK and E2 becomes 1.2 V, then set VSV for EVAP OFF.

CHECK:

Measure the voltage between terminals PTNK and E2 of the ECM connectors 30 sec. after switching the VSV for the EVAP from ON to OFF.

OK:

Voltage: 2.3 V or less

OK → **Check and replace ECM.**

NG

25	Remove fuel tank and check it.

NG → Replace fuel tank.

OK

26	Remove charcoal canister and check it (See page EC–7).

NG → Replace charcoal canister.

OK

Check and replace ECM (See page IN–41).

OBD II scan tool (excluding TOYOTA hand–held tester):

1	Check whether hose close to fuel tank have been modified, and check whether there are signs of any accident near fuel tank or charcoal canister (See page DI–81).

NG → Repair or replace.

OK

2	Check that fuel tank cap is TOYOTA genuine parts.

NG → Replace to TOYOTA genuine parts.

OK

3	Check that fuel tank cap is correctly installed.

NG → Correctly install fuel tank cap.

OK

4	Check fuel tank cap (See page EC–7).

NG → Replace fuel tank cap.

OK

5	Check filler neck for damage.

NG → Replace filler pipe.

OK

6	Check VSV connector for EVAP, VSV connector for CCV, VSV connector for purge flow switching valve and vapor pressure sensor connector for looseness and disconnection.

NG → Repair or connect VSV or sensor connector.

OK

7	Check vacuum hoses ((1), (2) , (3), (4), (5), (6), (7), (8) and (9) in Fig. 1 in circuit description).

CHECK:

(a) Check that the vacuum hose is connected correctly.
(b) Check the vacuum hose for looseness and disconnection.
(c) Check the vacuum hose for cracks, hole damage and blockage.

NG → Repair or replace.

OK

8	Check voltage between terminals VC and E2 of ECM connector (See page DI–81).

NG → Check and replace ECM (See page IN–41).

OK

9	Check voltage between terminals PTNK and E2 of ECM connectors (See page DI–81).

OK → Go to step 11.

NG

10	Check for open and short in harness and connector between vapor pressure sensor and ECM (See page IN–41).

NG → Repair or replace harness or connector.

OK

Replace vapor pressure sensor.

11	Check VSV for EVAP.

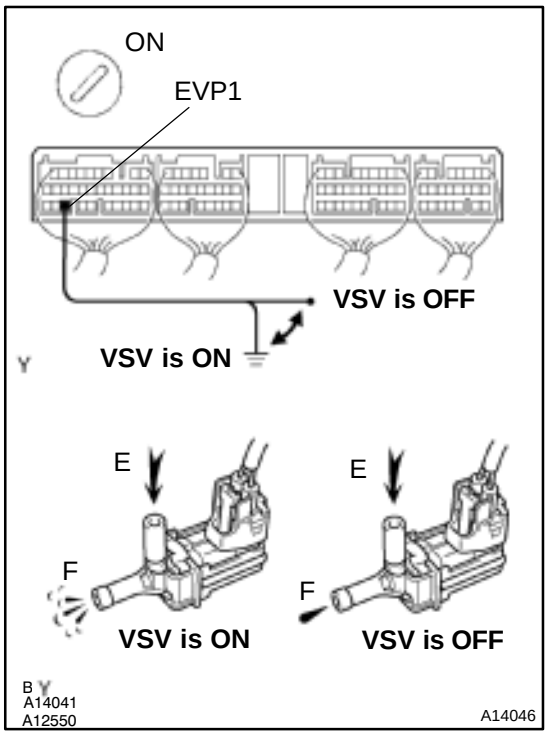

PREPARATION:

(a) Remove the ECM with connector still connected (See page SF–62).

(b) Turn the ignition switch ON.

CHECK:

Check VSV function.

(1) Connect between terminal EVP1 of the ECM connector and body ground (VSV ON).

(2) Disconnect between terminal EVP1 of the ECM connector and body ground (VSV OFF).

OK:

(1) VSV is ON:
Air from port E flows out through port F.
(2) VSV is OFF:
Air does not flow from port E to port F.

OK	Go to step 14.

NG

12	Check operation of VSV for EVAP (See page SF–40).

NG	Go to step 13.

NG

Replace VSV and clean vacuum hoses between throttle body and VSV for EVAP, and VSV for EVAP and charcoal canister, and then check charcoal canister.

13	Check for open and short in harness and connector between EFI main relay (Marking: EFI) and VSV for EVAP, and VSV for EVAP and ECM (See page IN–41).

NG	Repair or replace harness or connector.

OK

Check and replace ECM (See page IN–41).

14	Check VSV for CCV.

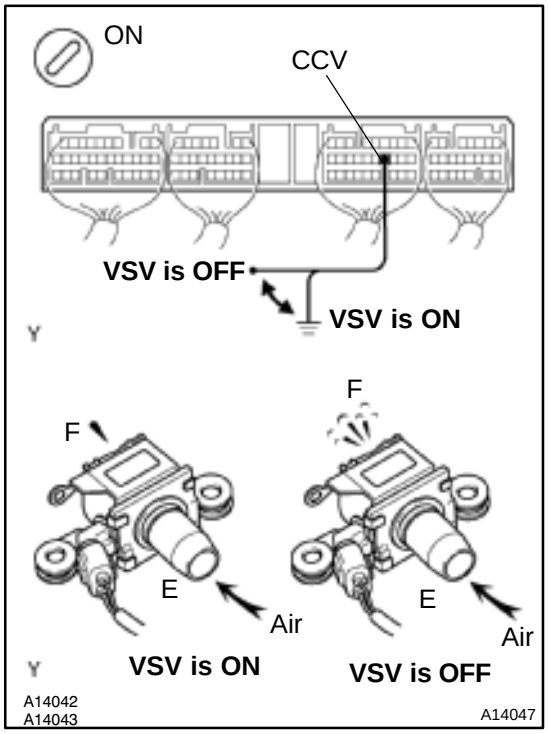

PREPARATION:

(a) Remove the ECM with connector still connected (See page SF–62).

(b) Turn the ignition switch ON.

CHECK:

Check the VSV function.

(1) Connect between terminal CCV of the ECM connector and body ground (VSV ON).

(2) Disconnect between terminal CCV of the ECM connector and body ground (VSV OFF).

OK:

VSV is ON:
Air does not flow from port E to port F.
VSV is OFF:
Air from port E flows out through port F.

OK → **Go to step 17.**

NG

15	Check operation of VSV for CCV (See page SF–42).

OK → **Go to step 16.**

NG

Replace VSV and charcoal canister, and then clean vacuum hoses between charcoal canister and VSV for CCV.

16	Check for open and short in harness and connector between EFI main relay (Marking: EFI) and VSV for CCV, and VSV for CCV and ECM (See page IN–41).

NG → **Repair or replace harness or connector.**

OK

Check and replace ECM (See page IN–41).

17	Check VSV for purge flow switching valve.

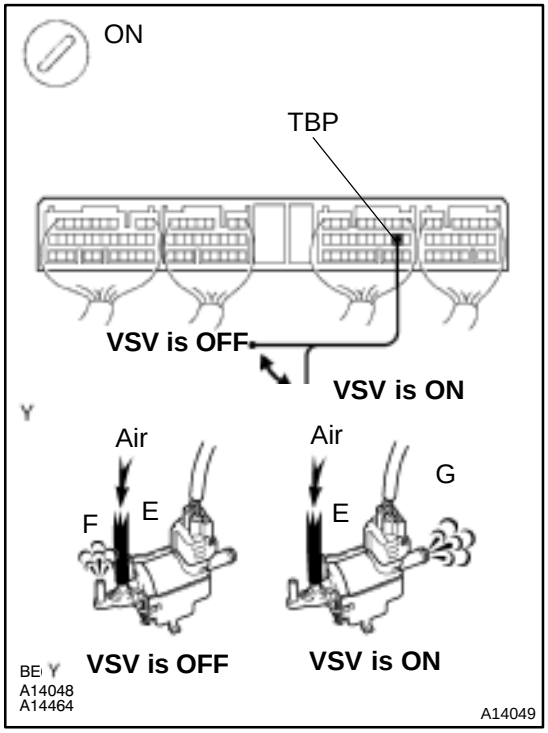

PREPARATION:

(a) Remove the ECM with connector still connected (See page SF–62).

(b) Turn the ignition switch ON.

CHECK:

Check the VSV function.

(1) Connect between terminal TBP of the ECM connector and body ground (ON).

(2) Disconnect between terminal TBP of the ECM connector and body ground (OFF).

OK:

(1) VSV is ON:
Air from pipe E is flowing out through pipe F.
(2) VSV is OFF:
Air from pipe E flows out through pipe G.

OK	Check and replace charcoal canister (See page EC–7).

NG

18	Check operation of VSV for purge flow switching valve (See page SF–45).

OK	Go to step 19.

NG

Replace VSV and charcoal canister, and then clean vacuum hoses ((!), (2) and (3) in Fig. 1 in circuit description).

19	**Check for open and short in harness and connector between EFI main relay (Marking: EFI) and VSV for purge flow switching valve, and VSV for purge flow switching valve and ECM (See page IN–41).**

NG → **Repair or replace harness or connector.**

OK

Check and replace ECM (See page IN–41).

DTC	P0450	Evaporative Emission Control System Pressure Sensor Malfunction

DTC	P0451	Evaporative Emission Control System Pressure Sensor Range/Performance

CIRCUIT DESCRIPTION

The vapor pressure sensor, VSV for canister closed valve (CCV) and VSV for pressure switching valve are used to detect abnormalities in the evaporative emission control system.
The ECM decides whether there is an abnormality in the evaporative emission control system based on the vapor pressure sensor signal.
DTC P0450 or P0451 is recorded by the ECM when the vapor pressure sensor malfunction.

DTC No.	DTC Detecting Condition	Trouble Area
P0450	10 seconds or less after engine starting condition (a) or (b) continues for 7 seconds or more: (2 trip detection logic) (a) Vapor pressure sensor value < –4.0 kPa (–30 mmHg, –1.2 in.Hg) (b) Vapor pressure sensor value ≧ 2.0 kPa (15 mmHg, 0.6 in.Hg)	• Open or short in vapor pressure sensor circuit • Vapor pressure sensor • ECM
P0451	Vapor pressure sensor output extremely changes under condition: Vehicle speed: 0 km/h (0mph),Engine speed: Idling (2 trip detection logic)	

WIRING DIAGRAM

Refer to DTC P0440 on page DI–81.

INSPECTION PROCEDURE

HINT:

- If DTC P0441, P0446, P0450 or P0451 is output after DTC P0440, first trouble shoot DTC P0441, P0446 P0450 or P0451. If no malfunction is detected, troubleshoot DTC P0440 next.
- Read freeze frame data using TOYOTA hand–held tester or OBD II scan tool. Because freeze frame records the engine conditions when the malfunction is detected. When troubleshooting, it is useful for determining whether the vehicle was running or stopped, the engine was warmed up or not, the air–fuel ratio was lean or rich, etc. at the time of the malfunction.
- When the ENGINE RUN TIME in the freeze frame data is less than 200 seconds, carefully check the VSV for EVAP, charcoal canister and vapor pressure sensor.

1	Check voltage between terminals VC and E2 of ECM connector (See page DI–81).

NG → Check and replace ECM (See page IN–41).

OK

2	Check voltage between terminals PTNK and E2 of ECM connectors (See page DI–81).

OK → Check and replace ECM (See page IN–41).

NG

3	Check for open and short in harness and connector between vapor pressure sensor and ECM (See page IN–41).

NG → Repair or replace harness or connector.

OK

Replace vapor pressure sensor.

DI6VG–02

DTC	P0500	Vehicle Speed Sensor Malfunction

CIRCUIT DESCRIPTION

The speed sensor for ABS detects the wheel speed and sends the appropriate signals to the ABS ECU. The ECU converts these signals into a 4–pulse signal and output it to the combination meter.
After this signal is converted into a more precise rectangular waveform by the waveform shaping circuit inside the combination meter, it is then transmitted to the ECM. The determines the vehicle speed based on the frequency of these pulse signals.

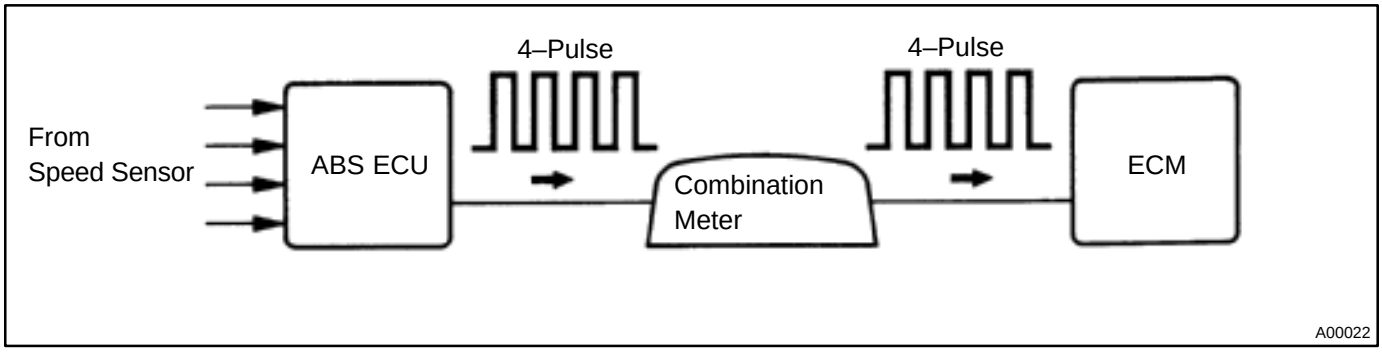

DTC No.	DTC Detecting Condition	Trouble Area
P0500	During vehicle is being driven, no vehicle speed sensor signal to ECM (2 trip detection logic)	• Combination meter • ABS ECU • Open or short in vehicle speed sensor circuit • Vehicle speed sensor • ECM

WIRING DIAGRAM

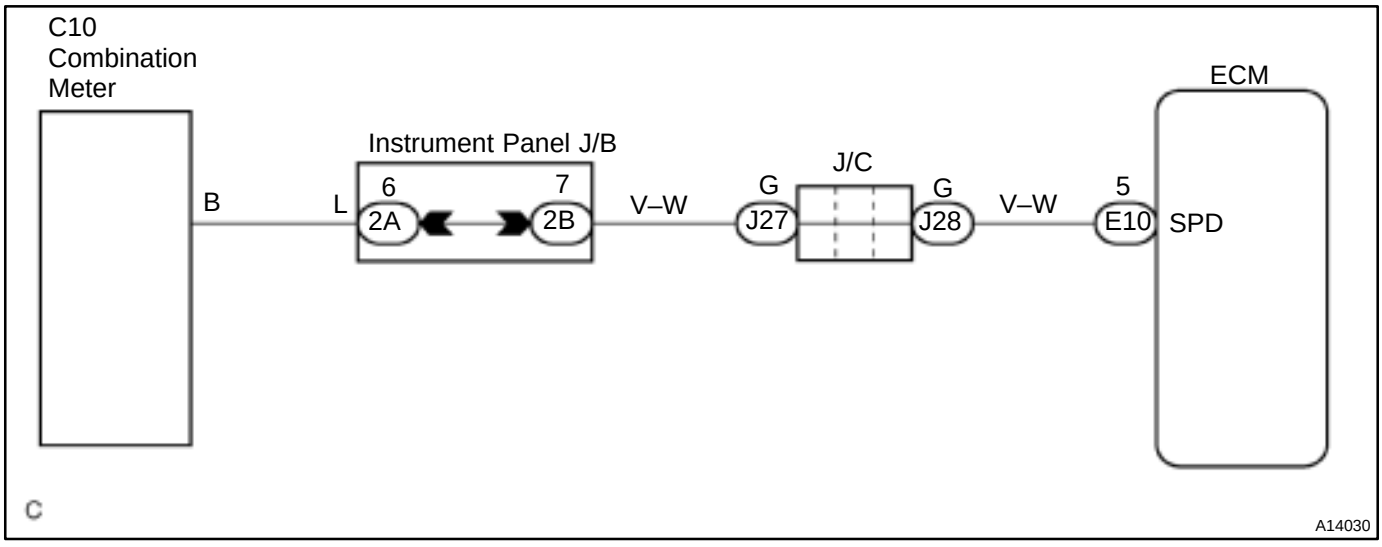

INSPECTION PROCEDURE

HINT:
Read freeze frame data using TOYOTA hand–held tester or OBD II scan tool. Because freeze frame records the engine conditions when the malfunction is detected, when troubleshooting it is useful for determining whether the vehicle was running or stopped, the engine warmed up or not, the air–fuel ratio lean or rich, etc. at the time of the malfunction.

1	Check operation of speedometer.

CHECK:

Drive the vehicle and check if the operation of the speedmeter in the combination meter is normal.

HINT:

The ABS ECU is operating normally if the speedometer display is normal.

NG → **Check and replace combination meter (See page BE–2) and ABS ECU (See page IN–41).**

OK

2	Check voltage between terminal SPD of ECM connector and body ground.

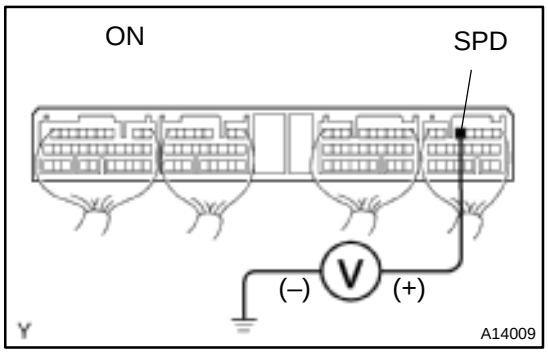

PREPARATION:

(a) Remove the ECM with connector still connected (See page SF–62).

(b) Drive the vehicle.

CHECK:

Measure voltage between terminal SPD of ECM connector and body ground when the wheel is turned slowly.

OK:

Voltage is generated intermittently.

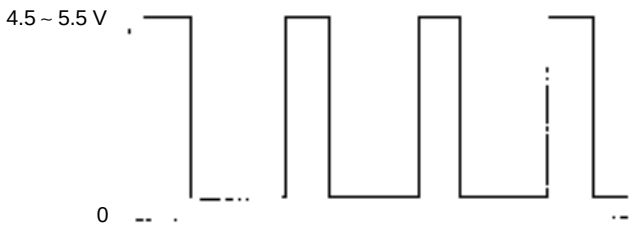

NG → **Check and repair harness and connector between combination meter and ECM.**

OK

Check and replace ECM (See page IN–41).

DI7SW–01

DTC	P1125	Throttle Control Motor Circuit Malfunction

CIRCUIT DESCRIPTION

Throttle motor is operated by the ECM and it opens and closes the throttle valve.
The opening angle of the throttle valve is detected by the throttle position sensor which is mounted on the throttle body and it provides feedback to the ECM to control the throttle motor in order to the throttle valve opening angle properly in response to driving condition.
If this DTC is stored, the ECM shuts down the power for the throttle motor, and the throttle valve is fully closed by the return spring.

DTC No.	DTC Detecting Condition	Trouble Area
P1125	Conditions (a) and (b) continue for 0.5 seconds: (a) Throttle control motor output duty ≧ 80 % (b) Throttle control motor current < 0.5 A	• Open or short in throttle control motor circuit • Throttle control motor • ECM
	Throttle control motor current ≧ 16 A	
	Condition (a) continues for 0.6 seconds: (a) Throttle control motor current ≧ 7 A	

WIRING DIAGRAM

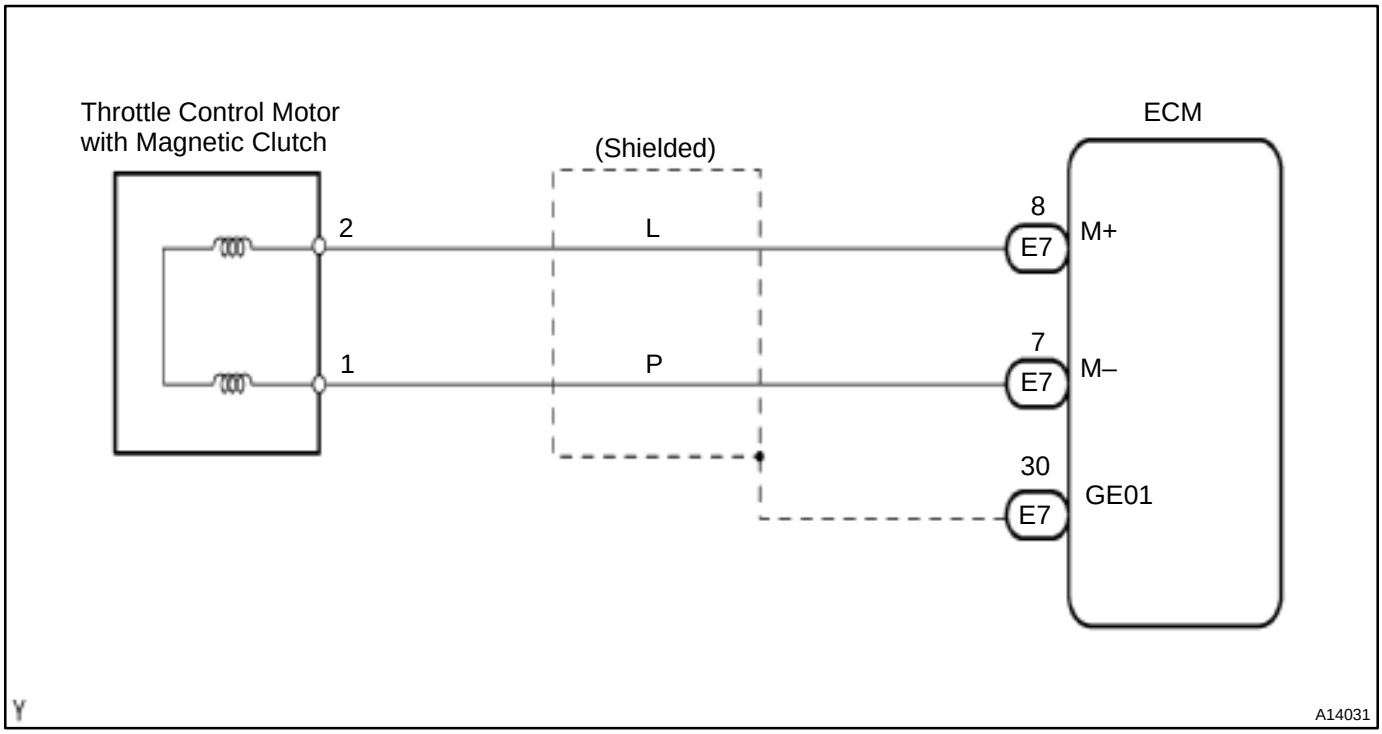

INSPECTION PROCEDURE

HINT:
Read freeze frame data using TOYOTA hand–held tester or OBD II scan tool. Because freeze frame records the engine conditions when the malfunction is detected. When troubleshooting, it is useful for determining whether the vehicle was running or stopped, the engine was warmed up or not, the air–fuel ratio was lean or rich, etc. at the time of the malfunction.

1	**Check throttle control motor circuit.**

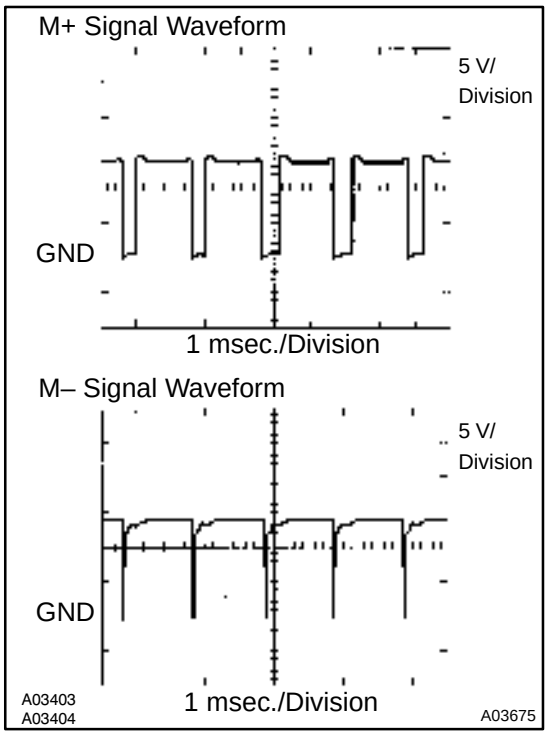

PREPARATION:

(a) Connect the oscilloscope between terminals M+ or M– and E1 of the ECM connectors.

(b) Start the engine.

CHECK:

Check the waveform between terminals M+ or M– and E1 of the ECM connectors when the engine is idling.

OK:

The correct waveforms are as shown.

HINT:

The waveform frequency varies depending on the throttle opening.

OK → **Check and replace ECM (See page IN–41).**

NG

2	**Check throttle control motor (See page SF–24).**

NG → **Replace throttle control motor with magnetic clutch (See page SF–29).**

OK

3	**Check for open and short in harness and connector between throttle control motor and ECM (See page IN–41).**

NG → **Repair or replace harness or connector.**

OK

Check and replace ECM (See page IN–41).

DTC	P1127	ETCS Actuator Power Source Circuit Malfunction

CIRCUIT DESCRIPTION

Battery positive voltage is supplied to terminal BM of the ECM even once when the ignition switch is OFF for the electric throttle control system.
If this DTC is stored, the ECM shuts down the power for the throttle motor, and the throttle valve is fully closed by the return spring.

DTC No.	DTC Detecting Condition	Trouble Area
P1127	Open in ETCS power source circuit	• Open in ETCS power source circuit • ECM

WIRING DIAGRAM

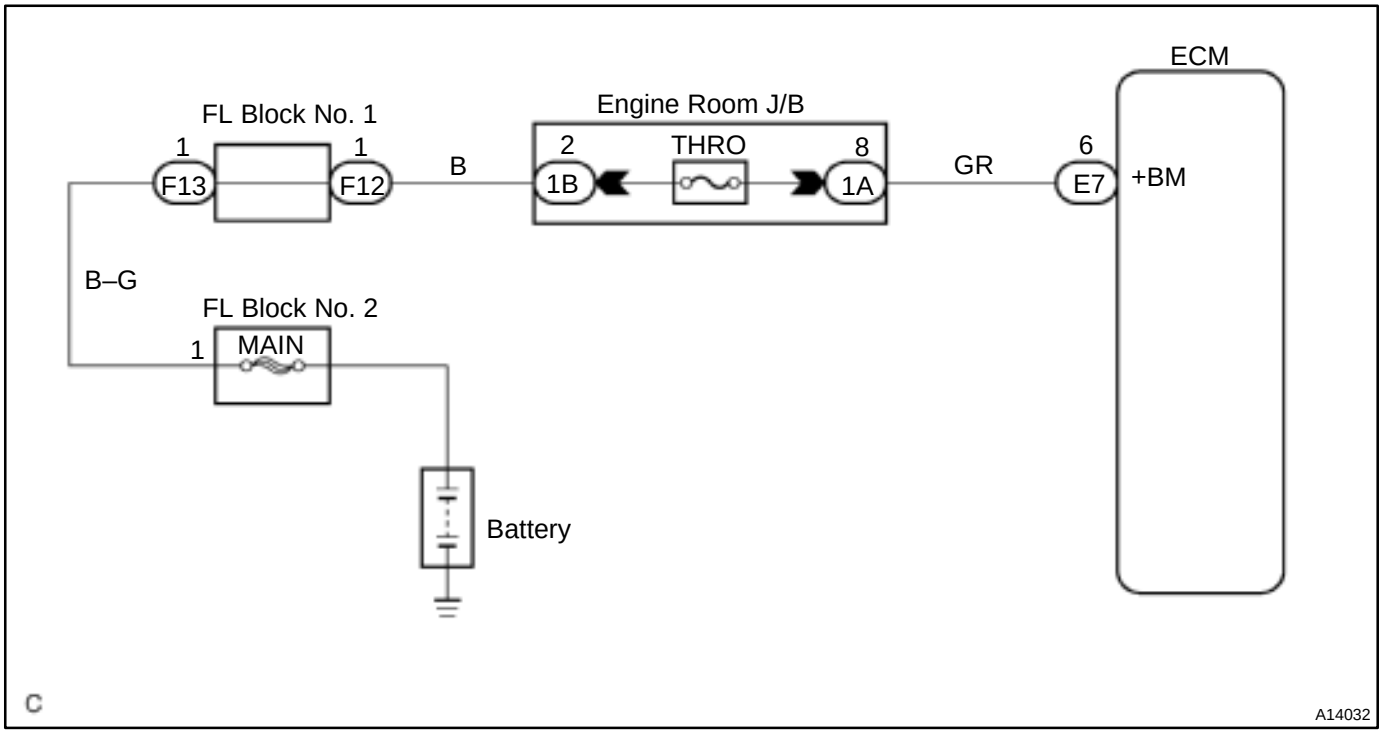

INSPECTION PROCEDURE

HINT:
Read freeze frame data using TOYOTA hand–held tester or OBD II scan tool. Because freeze frame records the engine conditions when the malfunction is detected. When troubleshooting, it is useful for determining whether the vehicle was running or stopped, the engine was warmed up or not, the air–fuel ratio was lean or rich, etc. at the time of the malfunction.

1	Check THRO fuse of R/B No.2.

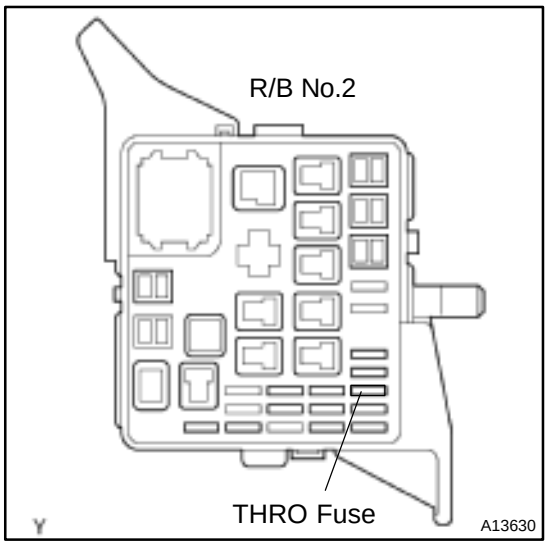

PREPARATION:
Remove the THRO fuse from the Engine room J/B.
CHECK:
Check the countinuity of the THRO fuse.
OK:
Continuity

NG → **Check for short in all harness and components connected to THRO fuse.**

OK

2	Check voltage between terminal +BM of ECM connector and body ground.

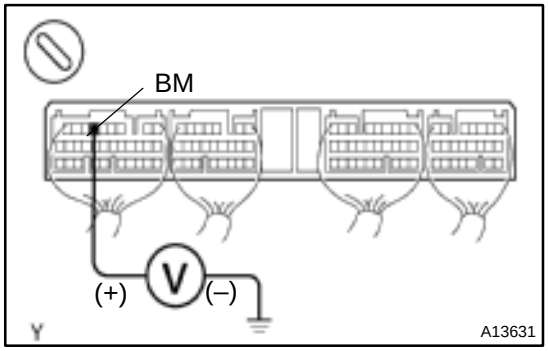

PREPARATION:
Remove the ECM with connector still connected (See page SF–62).
CHECK:
Measure the voltage between terminal BM of the ECM connector and body ground.
OK:
Voltage: 9 – 14 V

OK → **Check and replace ECM (See page IN–41).**

NG

Check and repair harness or connector between battery and ETCS fuse, and ETCS fuse and ECM (See page IN–41).

DI7SX–01

DTC	P1128	Throttle Control Motor Lock Malfunction

CIRCUIT DESCRIPTION

Throttle motor is operated by the ECM and it opens and closes the throttle valve.
The opening angle of the throttle valve is detected by the throttle position sensor which is mounted on the throttle body and it provides feedback to the ECM to control the throttle motor in order the throttle valve opening angle properly in response to driving condition.
If this DTC is stored, the ECM shuts down the power for the throttle motor, and the throttle valve is fully closed by the return spring.

DTC No.	DTC Detecting Condition	Trouble Area
P1128	Lock throttle control motor during control throttle control motor	• Throttle control motor • Throttle body

WIRING DIAGRAM

Refer to DTC P1125 on page DI–108.

INSPECTION PROCEDURE

HINT:
Read freeze frame data using TOYOTA hand–held tester or OBD II scan tool. Because freeze frame records the engine conditions when the malfunction is detected. When troubleshooting, it is useful for determining whether the vehicle was running or stopped, the engine was warmed up or not, the air–fuel ratio was lean or rich, etc. at the time of the malfunction.

1	**Check throttle control motor (See page DI–108).**

NG → **Replace throttle control motor (See page SF–29).**

OK

2	**Visually check throttle valve.**

PREPARATION:
Remove the intake air resonator.
CHECK:
Check whether or not a foreign body is caught between the throttle valve and housing.

NG → **Remove foreign body and clean throttle body.**

OK

Replace throttle body.

DTC	P1300	Igniter Circuit Malfunction (No.1)

DTC	P1305	Igniter Circuit Malfunction (No.2)

DTC	P1310	Igniter Circuit Malfunction (No.3)

DTC	P1315	Igniter Circuit Malfunction (No.4)

CIRCUIT DESCRIPTION

A DIS (Direct Ignition System) has been adopted. The DIS improves the ignition timing accuracy, reduces high–voltage loss, and enhances the the overall reliability of the ignition system by eliminating the distributor. The DIS is a 1–cylinder ignition system which ignites one cylinder with one ignition coil. In the 1–cylinder ignition system, the one spark plug is connected to the end of the secondary winding. High voltage generated in the secondary winding is applied directly to the spark plug. The spark of the spark plug pass from the center elecrtode to the ground electrode.

The ECM determines ignition timing and outputs the ignition signals (IGT) for each cylinder. Based on IGT signals, the power transistors in the igniter cuts off the current to the primary coil in the ignition coil is supplied to the spark plug that are connected to the end of the secondary coil. At the same time, the igniter also sends an ignition confirmation signal (IGF) as a fail–safe measure to the ECM.

DTC No.	DTC Detecting Condition	Trouble Area
P1300 P1305 P1310 P1315	No IGF signal to ECM while engine is running	• Ignition system • Open or short in IGF1 and IGT1 – 4 circuit from ignition coil with igniter • No.1 – No.4 ignition coil with igniter • ECM

WIRING DIAGRAM

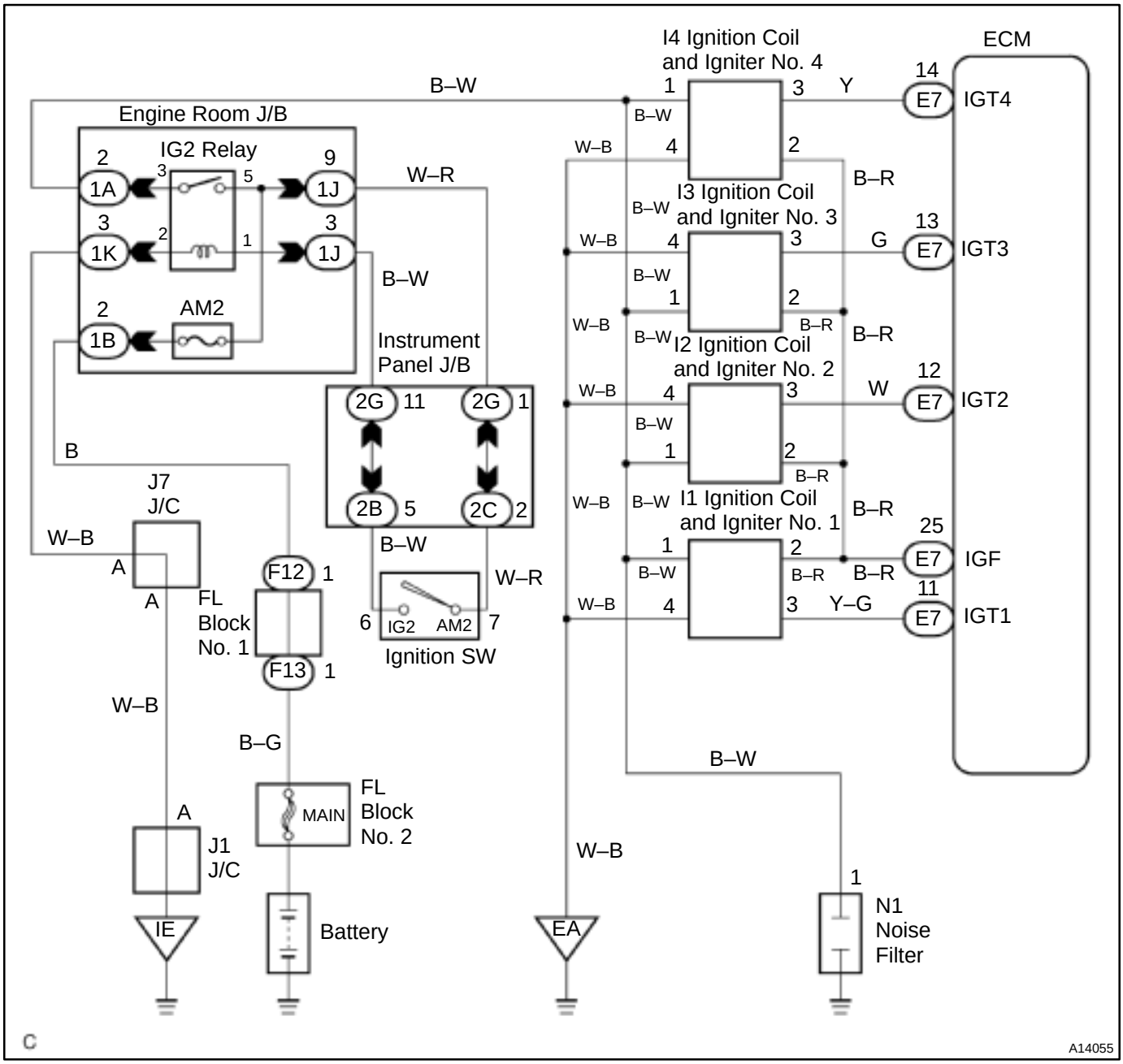

INSPECTION PROCEDURE

HINT:

- If DTC P1300 is displayed, check No.1 ignition coil with igniter circuit.
- If DTC P1305 is displayed, check No.2 ignition coil with igniter circuit.
- If DTC P1310 is displayed, check No.3 ignition coil with igniter circuit.
- If DTC P1315 is displayed, check No.4 ignition coil with igniter circuit.
- Read freeze frame data using TOYOTA hand–held tester or OBD II scan tool. Because freeze frame records the engine conditions when the malfunction is detected, when troubleshooting it is useful for determining whether the vehicle was running or stopped, the engine warmed up or not, the air–fuel ratio lean or rich, etc. at the time of the malfunction.

1	**Check spark plug and spark (See page DI–65).**

NG → **Go to step 4.**

OK

2	**Check for open and short in harness and connector in IGF and IGT signal circuit between ECM and ignition coil with igniter (See page IN–41).**

NG → **Repair or replace harness or connector.**

OK

3	**Disconnect ignition coil with igniter connector and check voltage between terminals IGF of ECM connector and body ground.**

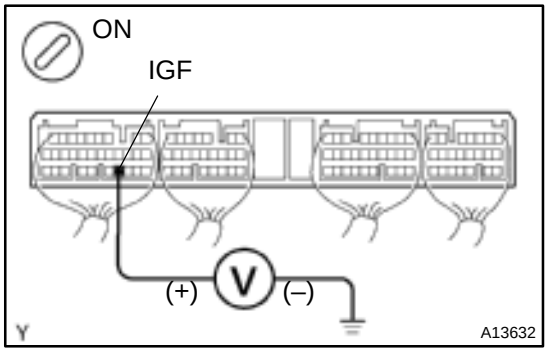

PREPARATION:

(a) Remove the ECM with connector still connected (See page SF–62).

(b) Disconnect the ignition coil with igniter connector.

(c) Turn the ignition switch ON.

CHECK:

Measure voltage between terminals IGF of the ECM connector and body ground.

OK:

Voltage: 4.5 – 5.5 V

OK → **Replace ignition coil with igniter.**

NG

Check and replace ECM (See page IN–41).

4	**Check for open and short in harness and connector in IGT signal circuit between ECM and ignition coil with igniter (See page IN–41).**

NG → **Repair or replace harness or connector.**

OK

5	**Check voltage between terminals IGT1 – 4 of ECM connector and body ground.**

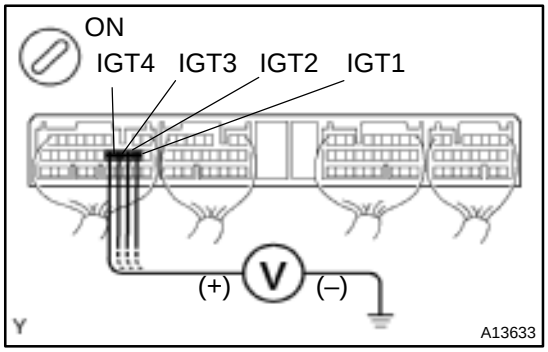

PREPARATION:
Remove the ECM with connector still connected (See page SF–62).
CHECK:
Measure voltage between terminals IGT1 – 4 of the ECM connector and body ground when engine is cranked.
OK:
Voltage: More than 0.1 V and less than 4.5 V

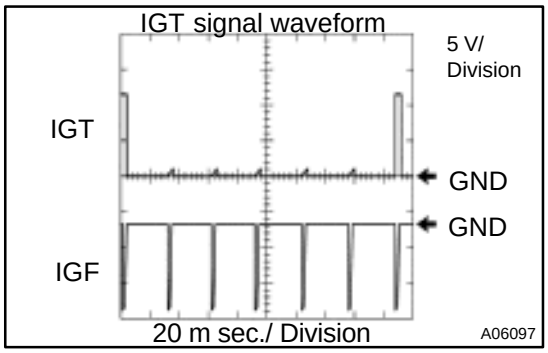

Reference: INSPECTION USING OSCILLOSCOPE
During cranking or idling, check waveform between terminals IGT1 – 4 and E1 of the ECM connector.
HINT:
Correct waveform appears as sohwn, with rectangle waves.

NG → **Check and replace ECM (See page IN–41).**

OK

6	**Disconnect ignition coil with igniter connector and check voltage between terminals IGT1 – 4 of ECM connector and body ground.**

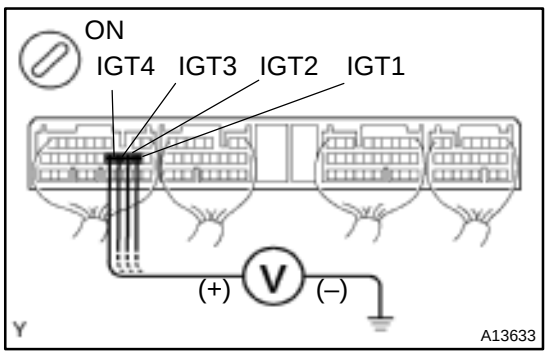

PREPARATION:
(a) Remove the ECM with connector still connected (See page SF–62).
(b) Disconnect the ignition coil with igniter connector.
CHECK:
Measure voltage between terminals IGT1 – 4 of the ECM connector and body ground when engine is cranked.
OK:
Voltage: More than 0.1 V and less than 4.5 V

NG → Check and replace ECM (See page IN–41).

OK

7	Check ignition coil with igniter power source circuit.

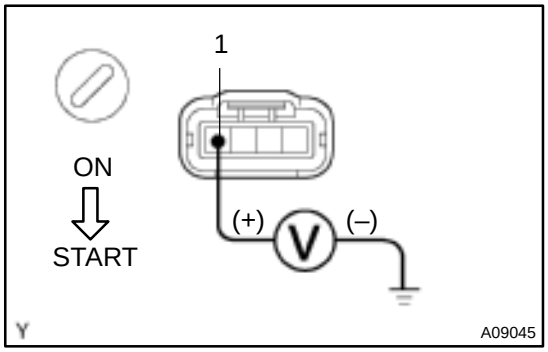

PREPARATION:
Disconnect the ignition coil with igniter connector.
CHECK:
Measure voltage between terminal 1 of ignition coil with igniter connector and body ground, when ignition switch is turned to "ON" and "START" position.
OK:
Voltage: 9 – 14 V

NG → Repair ignition coil with igniter power source-circuit.

OK

8	Check for open and short in harness and connector between ignition switch and ignition coil with igniter (See page IN–41).

NG → Repair or replace harness or connector.

OK

9	Check EFI main relay (Marking: EFI) (See page SF–37).

NG → Replace EFI main relay (marking: EFI).

OK

Replace ignition coil with igniter.

DI6VL–02

DTC	P1349	VVT System Malfunction

CIRCUIT DESCRIPTION

VVT system controls the intake valve timing to proper timing in response to driving condition.
ECM controls OCV (Oil Control Valve) to make the intake valve timing properly, and, oil pressure controlled with OCV is supplied to the VVT controller, and then, VVT controller changes relative position between the camshaft and the crankshaft.

DTC No.	DTC Detecting Condition	Trouble Area
P1349	Condition (a) or (b) continues for after the engine is warmed up and engine speed at 400 – 4,000 rpm : (a) Valve timing does not change from of current valve timing (b) Current valve timing is fixed.	• Valve timing • Oil control valve • VVT controller assembly • ECM

WIRING DIAGRAM

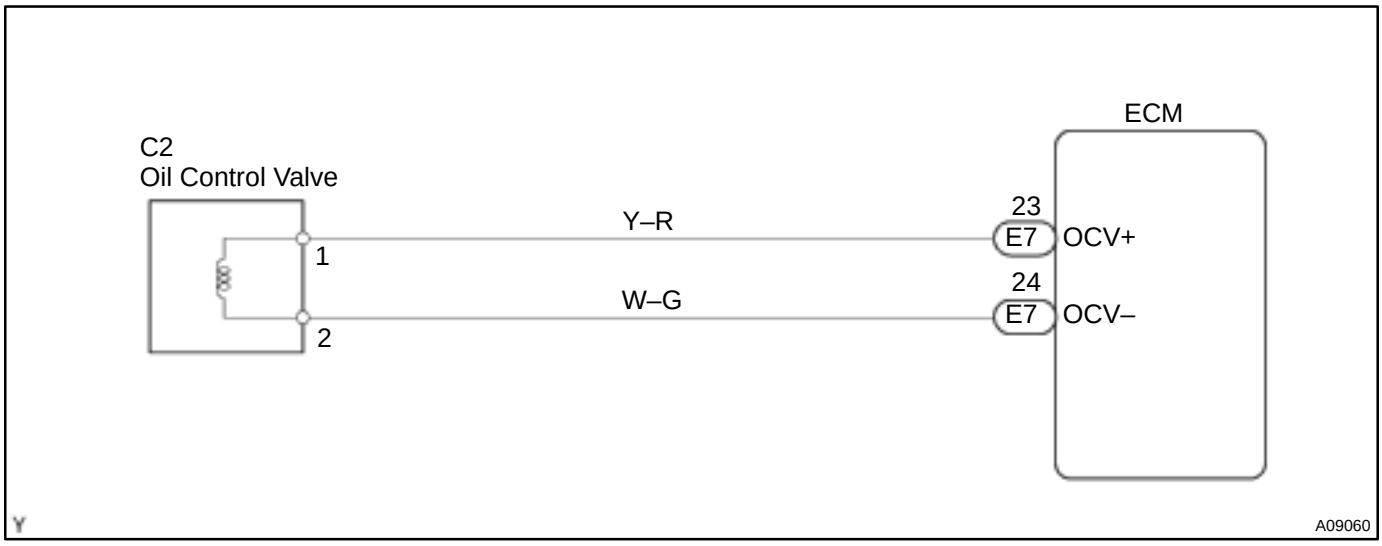

INSPECTION PROCEDURE

HINT:
Read freeze frame data using TOYOTA hand–held tester or OBD II scan tool. Because freeze frame records the engine conditions when the malfunction is detected, when troubleshooting it is useful for determining whether the vehicle was running or stopped, the engine warmed up or not, the air–fuel ratio lean or rich, etc. at the time of the malfunction.

TOYOTA hand–held tester

1	**Check valve timing (See page EM–21).**

NG → **Repair valve timing.**

OK

2	Check operation of OCV.

PREPARATION:

(a) Start the engine and warmed it up.

(b) Connect the TOYOTA hand–held tester and select VVT from ACTIVE TEST menu.

CHECK:

Check the engine speed when operate the OCV by the TOYOTA hand–held tester.

OK:

VVT system OFF to ON (OCV OFF to ON):
Engine speed increases.
VVT system ON to OFF (OCV ON to OFF):
Engine is stalled.

HINT:

The change of engine speed lasts only few seconds.

OK → **VVT system is OK.***

*: DTC P1349 is also output after the foreign object is caught in some part of the system in the engine oil and the system returns to normal in a short time. As ECM controls so that foreign objects are ejected, there is no problem about VVT. There is also no problem since the oil filter should get the foreign object in the engine oil.

NG

3	Check voltage between terminals OCV+ and OCV– of ECM connector.

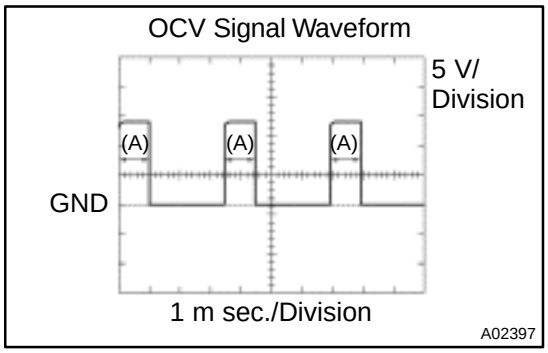

Reference: INSPECTION USING OSCILLOSCOPE

Turn the ignition switch ON, check waveform between terminals OCV+ and OCV– of the ECM connector.

HINT:

- The correct waveform is as shown.
- The waveform frequency (A) is lengthened as the engine speed becomes higher.

NG → **Check and replace ECM (See page IN–41).**

OK

4	**Check VVT controller assembly (See page EM–33).**

NG → **Replace VVT controller assembly, and then go to step 5.**

OK

5	**Check oil control valve (See page SF–35).**

NG → **Replace oil control valve, and then go to step 6.**

OK

6	**Check blockage of oil control valve, oil check valve and oil pipe No.1.**

NG → **Repair or replace.**

OK

7	**Check whether or not DTC P1349 is stored.**

PREPARATION:

(a) Clear the DTC (See page DI–3).

(b) Perform simulation test.

CHECK:

Check whether or not DTC P1349 is stored (See page DI–3).

OK:

DTC P1349 is not stored

OK → **VVT system is OK.***

*: DTC P1349 is also output after the foreign object is caught in some part of the system in the engine oil and the system returns to normal in a short time. As ECM controls so that foreign objects are ejected, there is no problem about VVT. There is also no problem since the oil filter should get the foreign object in the engine oil.

NG

Replace ECM.

OBD II scan tool (excluding TOYOTA hand–held tester)

1	**Check valve timing (See page EM–21).**

NG → **Repair valve timing.**

OK

2	**Check operation of OCV.**

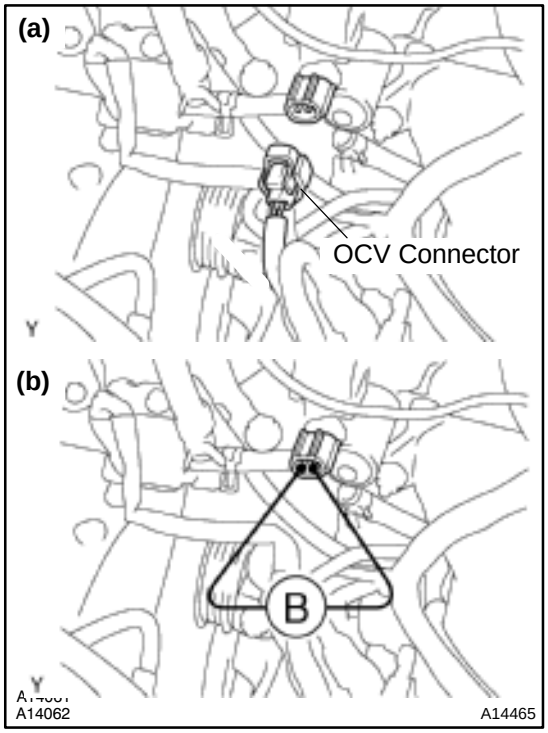

PREPARATION:
Start the engine.
CHECK:
(a) Check the engine speed when disconnect the OCV connector.
(b) Check the engine speed when apply battery positive voltage between terminals of OCV.
RESULT:

Result	Check (a)	Check (b)
1	Normal engine speed	Rough idle or engine stall
2	Except 1	

2 → **Go to step 4.**

1

3	Check voltage between terminals OCV+ and OCV– of ECM connector.

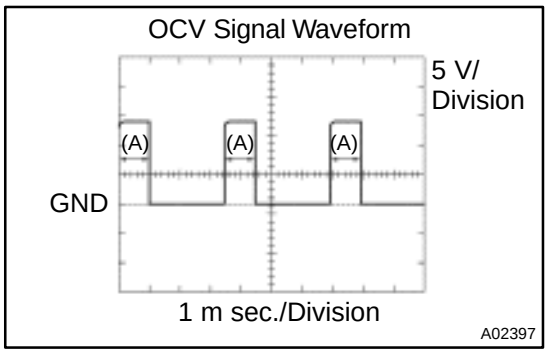

Reference: INSPECTION USING OSCILLOSCOPE

Turn the ignition switch ON, check waveform between terminals OCV+ and OCV– of the ECM connector.

HINT:

- The correct waveform is as shown.
- The waveform frequency (A) is lengthened as the engine speed becomes higher.

OK	VVT system is OK.*

*: DTC P1349 is also output after the foreign object is caught in some part of the system in the engine oil and the system returns to normal in a short time. As ECM controls so that foreign objects are ejected, there is no problem about VVT. There is also no problem since the oil filter should get the foreign object in the engine oil.

NG

Check and replace ECM (See page IN–41).

4	Check VVT controller assembly (See page EM–33).

NG	Replace VVT controller assembly, and then go to step 5.

OK

5	Check oil control valve (See page SF–35).

NG	Replace oil control valve, and then go to step 6.

OK

6	**Check blockage of oil control valve, oil check valve and oil pipe No.1.**

NG → **Repair or replace.**

OK

7	**Check whether or not DTC P1349 is stored.**

PREPARATION:

(a) Clear the DTC (See page DI–3).

(b) Perform simulation test.

CHECK:

Check whether or not DTC P1349 is stored (See page DI–3).

OK:

DTC P1349 is not stored

OK → **VVT system is OK.***

*: DTC P1349 is also output after the foreign object is caught in some part of the system in the engine oil and the system returns to normal in a short time. As ECM controls so that foreign objects are ejected, there is no problem about VVT. There is also no problem since the oil filter should get the foreign object in the engine oil.

NG

Replace ECM.

DTC	P1430	Vacuum Sensor for HC Adsorber and Catalyst System Circuit Malfunction

CIRCUIT DESCRIPTION

DTC No.	DTC Detecting Condition	Trouble Area
P1430	Open or short in vacuum sensor circuit	• Open or short in vacuum sensor circuit • Vacuum sensor for HC adsorber and catalyst system • ECM

HINT:
After confirming DTC P1430, use the hand–held tester to confirm the manifold absolute pressure from the CURRENT DATA.

Manifold Absolute Pressure (kPa)	Malfunction
Approx. 0	• HCLS circuit short
130 or more	• VC circuit open or short • HCLS circuit open • E2 circuit open

WIRING DIAGRAM

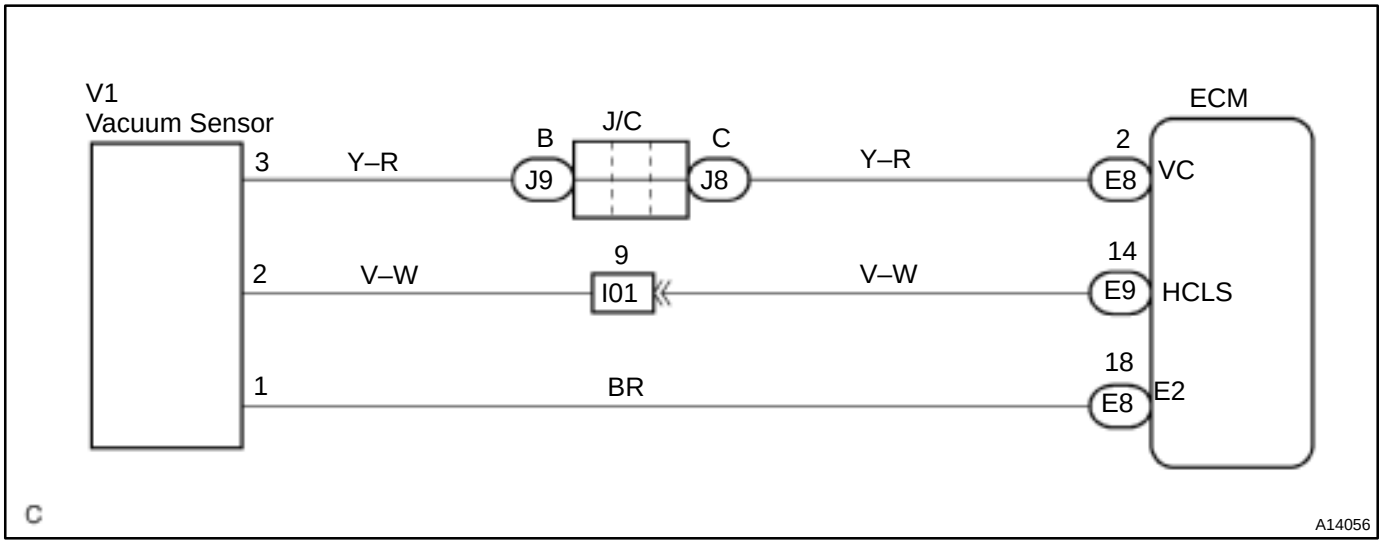

INSPECTION PROCEDURE

HINT:

- If DTCs P1430,P1431, P0110, P0115, P0120 and P0121 are output simultaneously, E2 (sensor ground) may be open.
- Read freeze frame data using hand–held tester. Because freeze frame records the engine conditions when the malfunction is detected. When troubleshooting it is useful for determining whether the vehicle was running or stopped, the engine was warmed up or not, the air–fuel ratio was lean or rich, etc. at the time of the malfunction.

When using hand–held tester:

1	**Connect hand–held tester, and read value.**

PREPARATION:

(a) Connect the hand–held tester to the DLC3.

(b) Turn the ignition switch ON and push the hand–held tester main switch ON.

CHECK:

Read the value of the manifold absolute pressure on the hand–held tester.

OK:

Same as atmospheric pressure.

OK → **Check for intermittent problems (See page DI–3).**

NG

2	**Check voltage between terminals VC and E2 of engine ECU Connector.**

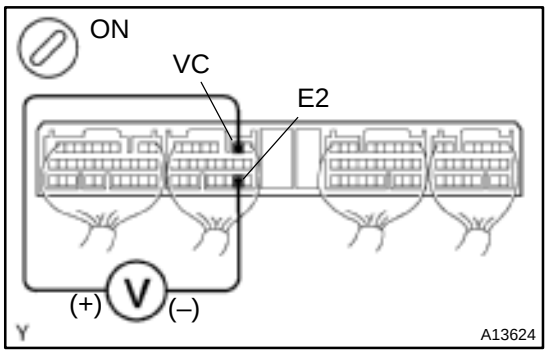

PREPARATION:

(a) Remove the ECM with connector still connected (See page SF–62).

(b) Turn the ignition switch ON.

CHECK:

Measure the voltage between terminals VC and E2 of the engine ECU connector.

OK:

Voltage: 4.5 – 5.5 V

NG → **Check and replace engine ECU (See page IN–41).**

OK

3	**Check voltage between terminals HCLS and E2 of engine ECU connector.**

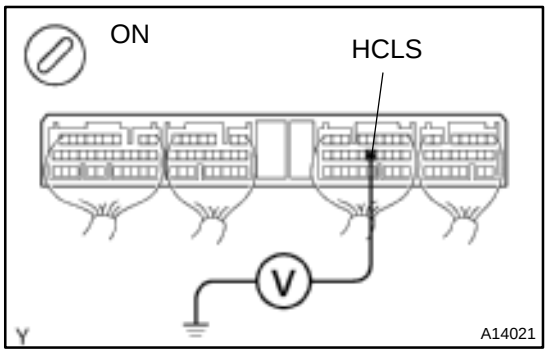

PREPARATION:

(a) Remove the ECM with connector still connected (See page SF–62).

(b) Turn the ignition switch ON.

CHECK:

Measure the voltage between terminals HCLS and E2 of the engine ECU connector.

OK:

Voltage: 3.3 – 3.9 V

OK	**Check and replace engine ECU (See page IN–41).**

NG

4	**Check for open and short in harness and connector between vacuum sensor and engine ECU.**

NG	**Repair and replace harness or connector.**

OK

Replace vacuum sensor (See page SF–50).

When not using hand–held tester:

1	**Check voltage between terminals VC and E2 of engine ECU connector.**

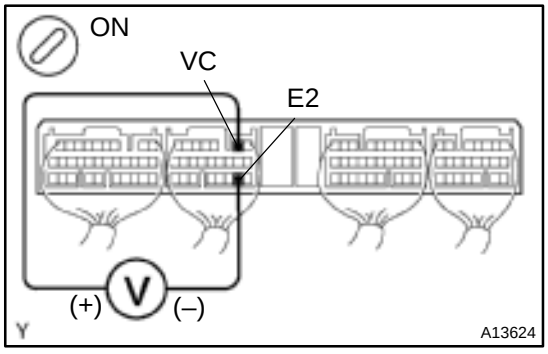

PREPARATION:

(a) Remove the ECM with connector still connected (See page SF–62).

(b) Turn the ignition switch ON.

CHECK:

Measure the voltage between terminals VC and E2 of the engine ECU connector.

OK:

Voltage: 4.5 – 5.5 V

NG	**Check and replace engine ECU (See page IN–41).**

OK

2	Check voltage between terminals HCLS and E2 of engine ECU connector.

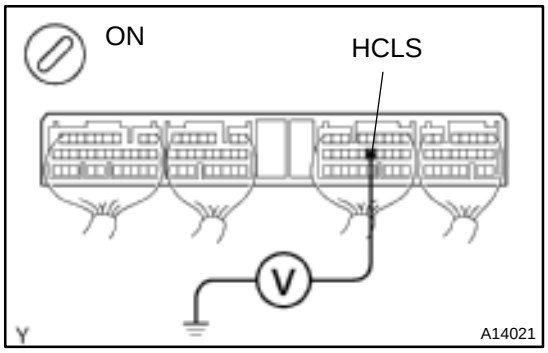

PREPARATION:

(a) Remove the ECM with connector still connected (See page SF–62).

(b) Turn the ignition switch ON.

CHECK:

Measure the voltage between terminals HCLS and E2 of the engine ECU connector.

OK:

Voltage: 3.3 – 3.9 V

OK	Check and replace engine ECU (See page IN–41).

NG

3	Check for open and short in harness and connector between engine ECU and vacuum sensor (See page IN–41).

NG	Repair or replace harness or connector.

OK

Replace vacuum sensor.

DTC	P1431	Vacuum Sensor for HC Adsorber and Catalyst System Circuit Range/Performance Problem

CIRCUIT DESCRIPTION

Refer to DTC P1430 on page DI–127.

DTC No.	DTC Detecting Condition	Trouble Area
P1431	Conditions (a), (b), (c) and (d) continue with more than 10 seconds: (2 trip detection logic) (b) PIM > 3.96 V (c) VSV for HC Adsorber and Catalyst System is ON (d) Engine speed is 1,000 rpm or more (e) THW ≧ 0˚C (32˚F)	• Vacuum sensor for HC adsorber and catalyst system • Vacuum line
	Conditions (a), (b) and (c) continue with more than 10 second: (2 trip detection logic) (a) PIM < 1.2 V (b) Engine stopped (c) VSV for HC Adsorber and Catalyst System is OFF (d) THW ≧ 0˚C (32˚F)	

INSPECTION PROCEDURE

HINT:

- If DTCs P1430, P1431, P0110, P0115, P0116, P0120, P0121 are output simultaneously, E2 (sensor ground) may be open.
- Read freeze frame data using hand–held tester. Because freeze frame records the engine conditions when the malfunction is detected. When troubleshooting it is useful for determining whether the vehicle was running or stopped, the engine was warmed up or not, the air–fuel ratio was lean or rich, etc. at the time of the malfunction.
- When a bypass valve has a trouble, it is possible that DTC P1341 will be detected ahead of DTC P1436, and P1437, so in case that P1431 even if they are not memorized.

1	**Are there any other codes (besides DTC P1431) being output?**

YES → **Go to relevant DTC chart.**

NO

2	Check vacuum sensor for HC adsorber and catalyst system (See page SF–51).

NG → Replace vacuum sensor.

OK →

Check vacuum line for vacuum sensor for blockage.

DI7T0–01

DTC	P1436	Bypass Valve Malfunction

CIRCUIT DESCRIPTION

Before the engine is started, the bypass valve remains open. When the engine is cold started, the ECM outputs a signal to the VSV (for HC adsorber and catalyst system), which open the passage between the intake manifold and the actuator, thus applying a vacuum to the actuator. As a result, the bypass valve closes.
Immediately after the engine has started, the exhaust gases pass through the adsorber material in with HC becomes adsorbed and stored for a certain length of time (until the temperature of the front TWC rises). Thus, the release of HC into the atmosphere is prevented when the temperature of the TWC is low.
After the TWC has warmed up, the VSV closes the passage between the intake manifold and the actuator, causing the bypass valve to open. Then, as the temperature of the rear TWC rises, the temperature of the adsorber material that surrounds it also rises, and the HC starts to desorb, and becomes cleaned by the TWC.
Furthermore, this system activates the VSV when decelerating and the HC adsorber has become the specified temperature, allowing the vacuum from the intake manifold to close the bypass valve in order to scavenge the HC that remains in the adsorber material.

DTC No.	DTC Detecting Condition	Trouble Area
P1436	With cold start when the water temperature and intake air temperature were –10 °C (14 °F)to 40 °C (104 °F), and when the water temperature has reached 45 °C (113 °F) or more and the engine load factor has become more than 30 %, the valve operation is not preformed normally.	• Vacuum line • Actuator • Front exhaust pipe

INSPECTION PROCEDURE

1	Check vacuum hose and tube between VSV and actuator for HC adsorber and catalyst system.

CHECK:

Check that the vacuum hose and tube for clog and deformation.

NG → **Repair or replace.**

OK ↓

2	Check actuator operation (See page EC–13).

OK → **Recheck after assembly.**

NG ↓

3	Check that dirt such as mud is deposited on lever and shaft of bypass valve.

YES → Remove dirt and check again.

NO

4	Check that actuator’s rod and bracket is deformed.

YES → Repair or replace actuator.

NO

5	Check bypass valve operation (See page EC–13).

NG → Replace front exhaust pipe.

OK

6	Check actuator operation (See page EC–13).

NG → Replace actuator.

OK

Repair or replace front exhaust pipe.

DI7T1–01

DTC	P1437	Vacuum Line Malfunction

CIRCUIT DESCRIPTION

Refer to DTC P1436 on page DI–133.

DTC No.	DTC Detecting Condition	Trouble Area
P1437	With cold start when the water temperature and intake air temperature were – 10 ˚C (14 ˚F) to 40 ˚C (104 ˚F), and when the water temperature has reached 45 ˚C (113 ˚F) or more and the engine load factor has become more than 30 %, the negative pressure has abnormality.	• Vacuum line • VSV for HC adsober and catalyst system • Vacuum sensor for HC adsober and catalyst system • Check valve

INSPECTION PROCEDURE

TOYOTA hand–held tester:

1	**Check vacuum hoses and tube between intake manifold and actuator.**

CHECK:

(a) Check that the vacuum hoses is connected correctly.
(b) Check the vacuum hose for looseness and disconnection.
(c) Check the vacuum hose and tube for cracks, holes and damage.
(d) Check the vacuum hose for clog.

NG → **Repair or replace.**

OK ↓

2	**Check for open and short in harness and connector between VSV (for HC adsober and catalyst system) and ECM (See page IN–41).**

NG → **Repair or replace harness or connector.**

OK ↓

3	**Check VSV (for HC adsorber and catalyst system) (See page SF–47).**

NG → **Replace VSV.**

OK ↓

4	**Check vacuum stored in vacuum hose between check valve and actuator.**

PREPARATION:

(a) Disconnect the vacuum hose from the pressure sensor for HC adsober and catalyst system.
(b) Connect the MITYVAC (Hand–held vacuum pump) to the vacuum hose.
(c) Connect the TOYOTA hand–held tester to the DLC3.

CHECK:

(a) VSV (for HC adsober and catalyst system) is operate by TOYOTA hand–held tester.
(b) Apply vacuum of 55 kPa (420 mmHg, 16.24 in.Hg).
(c) Check that the vacuum after 30 sec.

OK:

The vacuum is 25 Kpa (188 mmHg, 7.38 in.Hg) or more.

OK → **Check and replace vacuum hose between intake manifold and actuator.**

NG

5	**Check check valve.**

NG → **Replace check valve.**

OK

6	**Check stored vacuum of VSV.**

NG → **Replace VSV (for HC adsober and catalyst system).**

OK

7	**Check stored vacuum of actuator(See page EC–13).**

NG → **Replace actuator.**

OK

Check and replace vacuum hose and tube between check valve and actuator.

OBD II scan tool (excluding TOYOTA hand–held tester):

1	**Check vacuum hoses and tube between intake manifold and actuator.**

CHECK:

(a) Check that the vacuum hoses is connected correctly.
(b) Check the vacuum hose for looseness and disconnection.
(c) Check the vacuum hose and tube for cracks, holes and damage.
(d) Check the vacuum hose and tube for clog.

NG → **Repair or replace.**

OK

2	**Check for open and short in harness and connector between VSV (for HC adsober and catalyst system) and ECM (See page IN–41).**

NG → **Repair or replace harness or connector.**

OK

3	**Check VSV (for HC adsober and catalyst system) (See page SF–47).**

NG → **Replace VSV.**

OK

4	**Check vacuum stored in vacuum hose between check valve and actuator.**

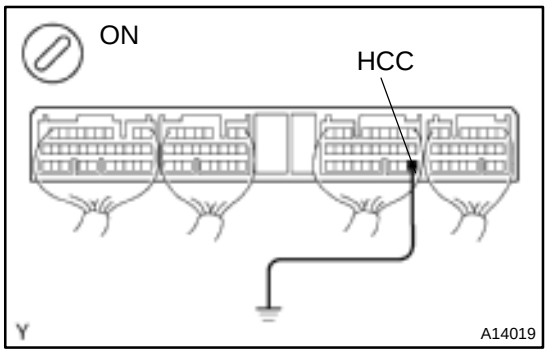

PREPARATION:

(a) Remove the ECM with connector still connected (See page SF–62).
(b) Disconnect the vacuum hose from the vacuum sensor (for HC adsober and catalyst system).
(c) Connect the MITYVAC (Hand–held vacuum pump) to the vacuum hose.

CHECK:

(a) Connect the terminal HCC of the ECM and body ground.
(b) Apply a vacuum of 55 kPa (420 mmHg, 16.24 in.Hg).
(c) Check that the vacuum after 30 sec.

OK:

The vacuum is 25 Kpa (188 mmHg, 7.38 in.Hg) or more.

OK	**Check and replace vacuum hose between check valve and actuator.**

NG

5	**Check check valve.**

NG	**Replace check valve.**

OK

6	**Check stored vacuum of VSV (See page SF–47).**

NG	**Replace VSV for HC adsober and catalyst system.**

OK

7	**Check stored vacuum of actuator (See page EC–13).**

NG → **Replace actuator.**

OK

Check and replace vacuum hose and tube between check valve and actuator.

DI7T3–01

DTC	P1525	Resolver Vehicle Malfunction

CIRCUIT DESCRIPTION

DTC No.	DTC Detecting Condition	Trouble Area
P1525	When signals of vehicle speed is not input from the resolver for 16 sec. or more while rurining at a speed of 20 km/h or more	• ECM • HV ECU • Wire harness

WIRING DIAGRAM

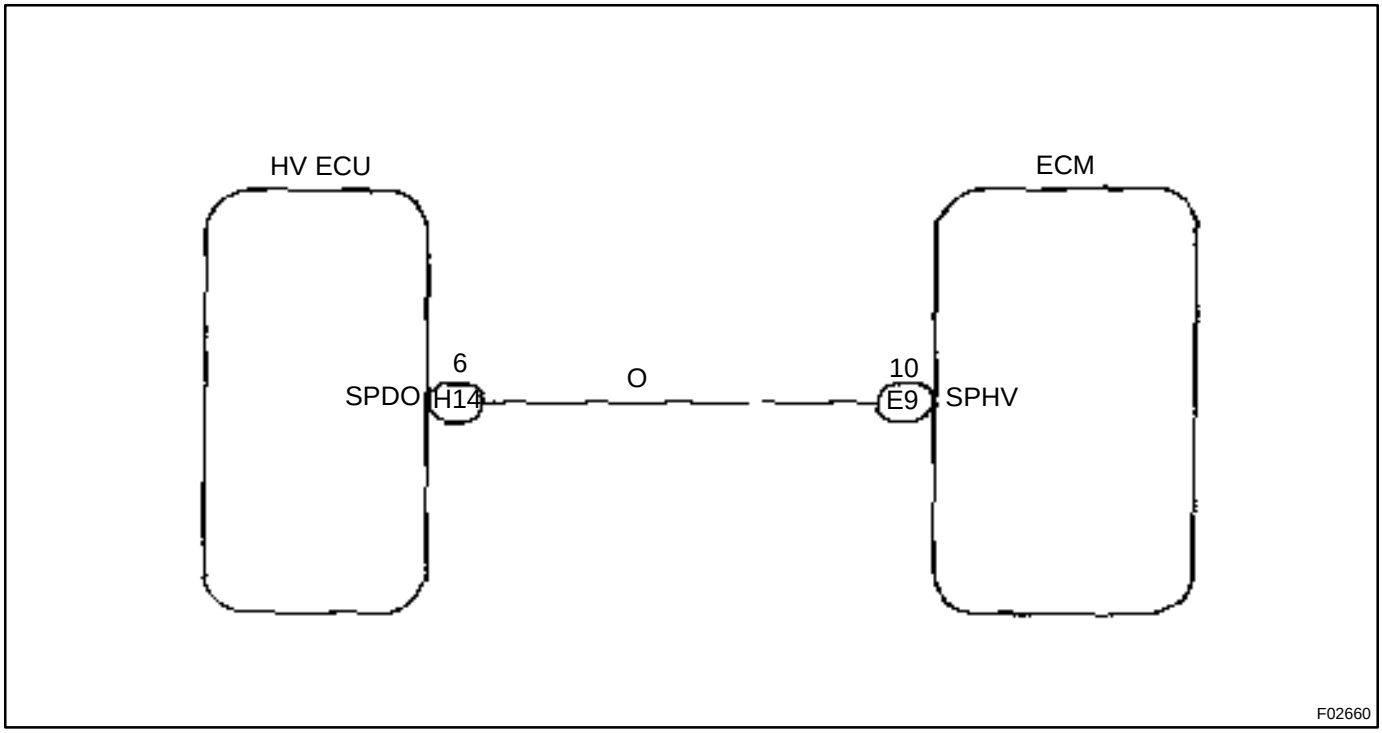

INSPECTION PROCEDURE

1	**Check voltage between terminal SPHV of ECM and body ground.**

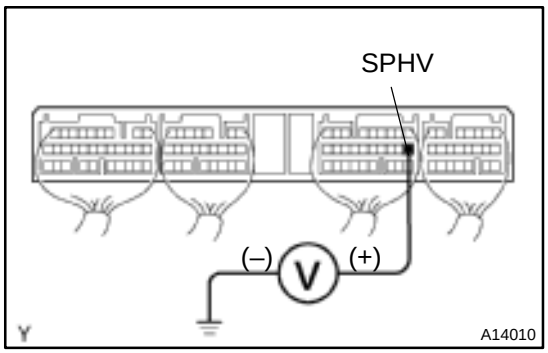

PREPARATION:

(a) Remove the ECM with connector still connected (See page SF–62).

(b) Drive the vehicle at 20 km/h (12 mph).

CHECK:

Measure the voltage between SPHV of engine ECU connector and body ground.

OK:

Voltage is generated intermitlently.

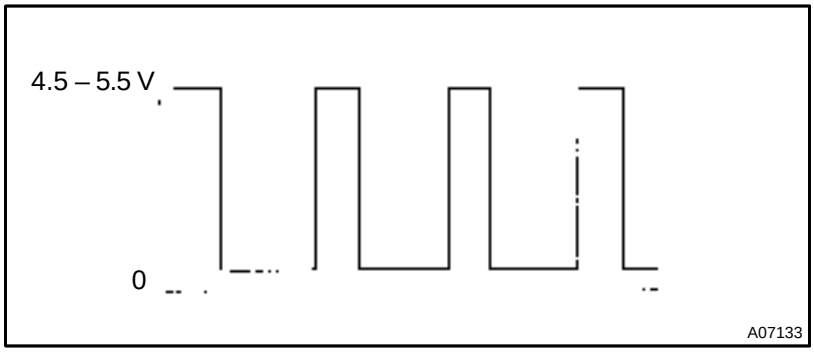

OK	**Replace engine ECU.**

NG

2	**Check for open and short in harness and connector between SPHV of ECM and SPDO of HV ECU.**

NG	**Repair or replace harness or connector.**

OK

Replace HV ECU.

DI6VN–02

DTC	P1600	ECM BATT Malfunction

CIRCUIT DESCRIPTION

Battery positive voltage is supplied to terminal BATT of the ECM even when the ignition switch is OFF for use by the DTC memory and air–fuel ratio adaptive control value memory, etc.

DTC No.	DTC Detecting Condition	Trouble Area
P1600	Open in back up power source circuit	• Open in back up power source circuit • ECM

HINT:
If DTC P1600 appear, the ECM does not store another DTC.

WIRING DIAGRAM

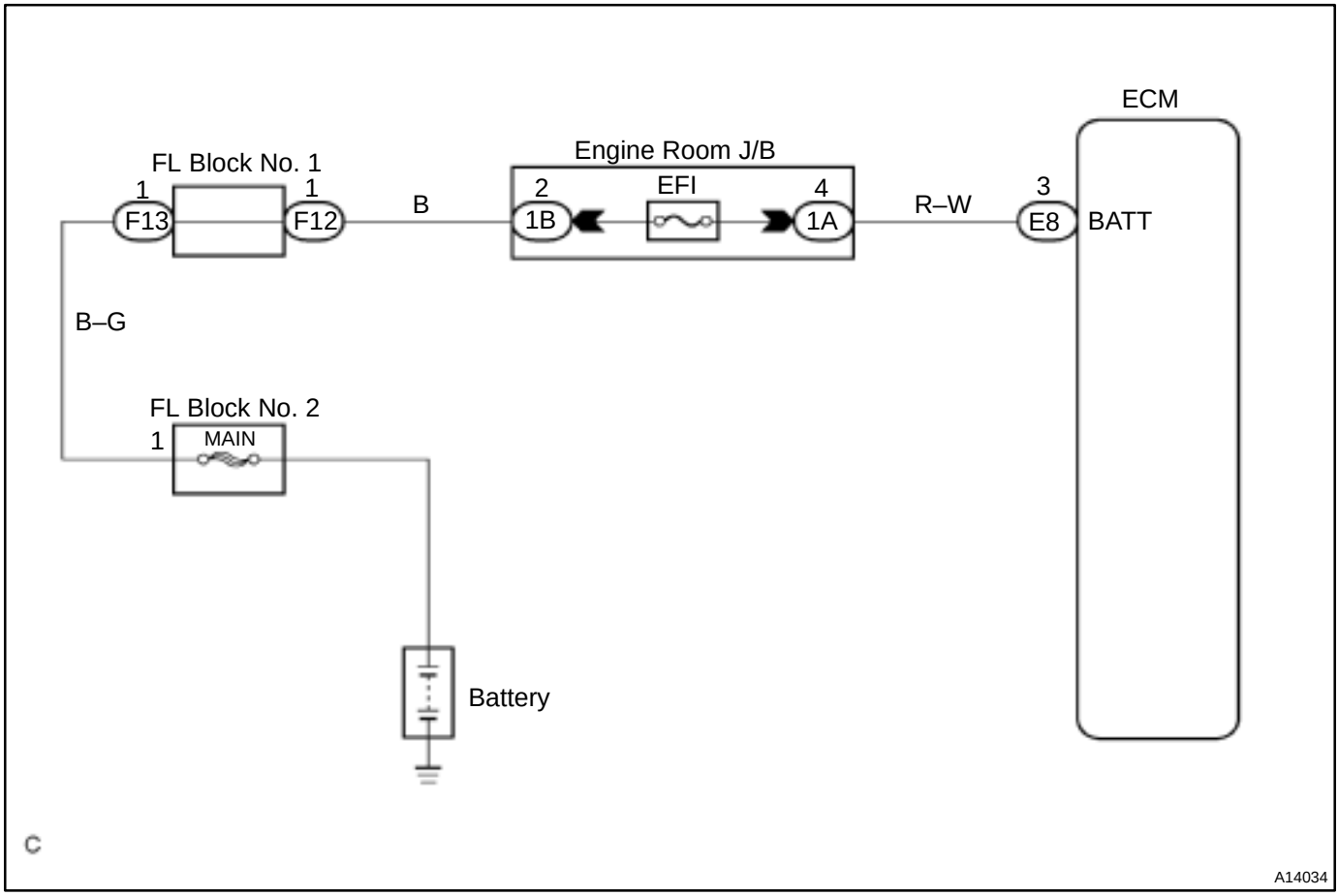

INSPECTION PROCEDURE

HINT:
Read freeze frame data using TOYOTA hand–held tester or OBD II scan tool. Because freeze frame records the engine conditions when the malfunction is detected, when troubleshooting it is useful for determining whether the vehicle was running or stopped, the engine warmed up or not, the air–fuel ratio lean or rich, etc. at the time of the malfunction.

1	**Check voltage between terminal BATT of ECM connector and body ground.**

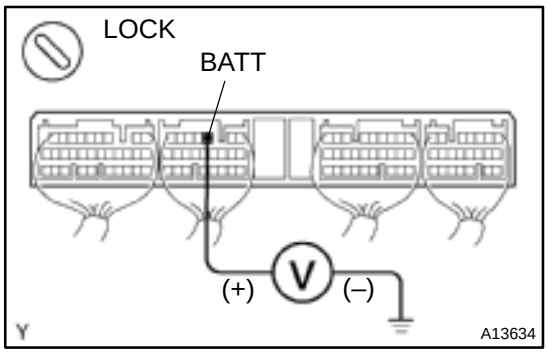

PREPARATION:
Remove the ECM with connector still connected (See page SF–62).
CHECK:
Measure voltage between terminal BATT of the ECM connector and body ground.
OK:
Voltage: 9 – 14 V

OK → **Check and replace ECM (See page IN–41).**

NG

2	**Check EFI fuse.**

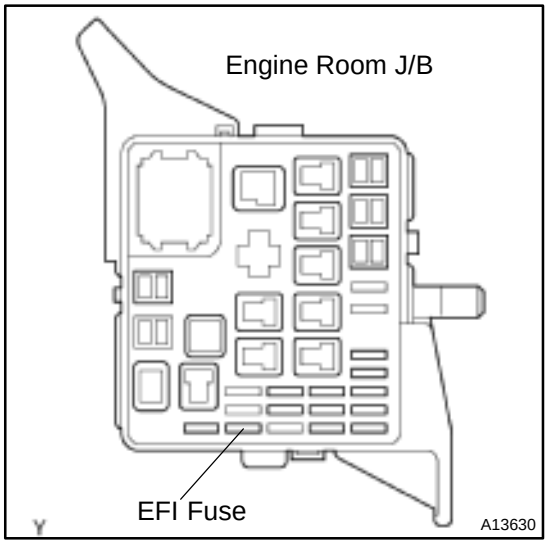

PREPARATION:
Remove the EFI fuse from the engine room J/B.
CHECK:
Check continuity of EFI fuse.
OK:
Continuity

NG → **Check for short in all the harness and components connected to EFI fuse.**

OK

Check and repair harness or connector between battery and EFI fuse and ECM (See page IN–41).

DI7T4–01

DTC	P1636	HV ECU Malfunction

CIRCUIT DESCRIPTION

DTC No.	DTC Detecting Condition	Trouble Area
P1636	When communication with HV ECU is interrupted for 1.5 sec. or more	• Wire harness • HV ECU • ECM

WIRING DIAGRAM

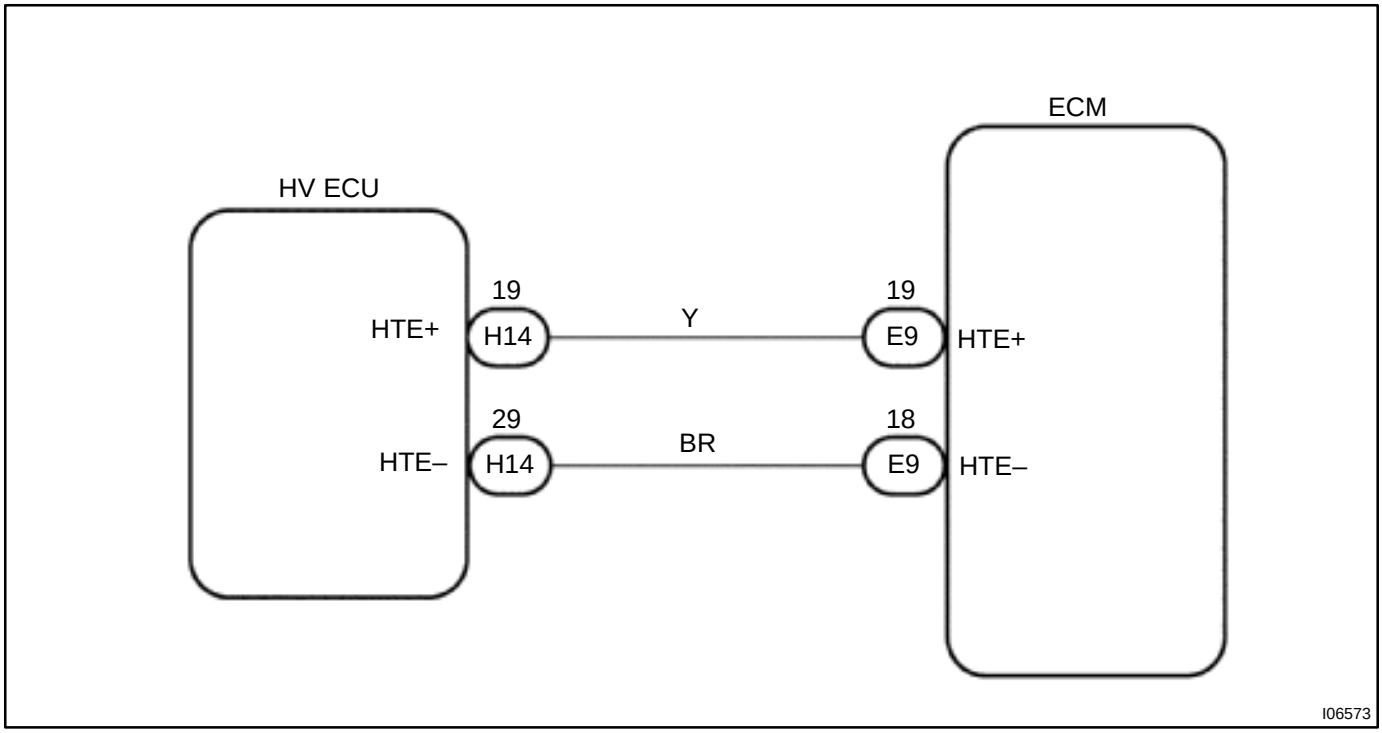

INSPECTION PROCEDURE

1	**Check voltage between terminal HTE+ and HTE– of ECM.**

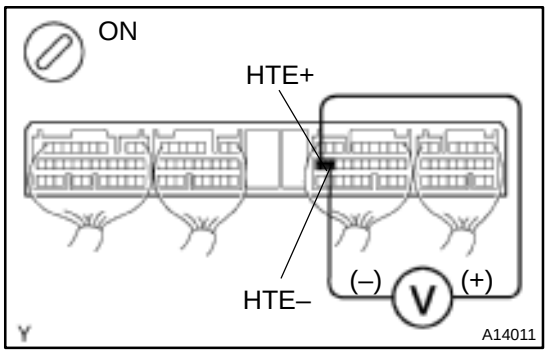

PREPARATION:

(a) Remove the ECM with connector still connected (See page SF–62).

(b) Turn the ignition swith ON.

CHECK:

Measure voltage between terminal HTE+ and HTE– of the ECM.

OK:

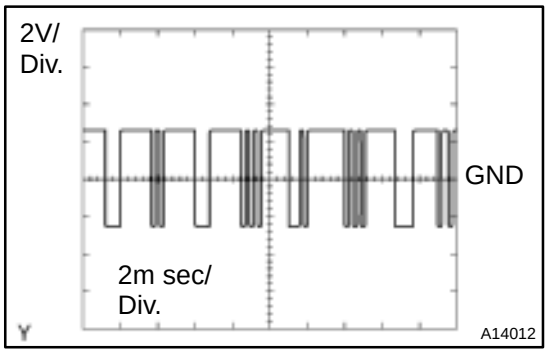

Reference: INSPECTION USING OSCILLOSCOPE

Turn the ignition swith ON, check waveform between terminals HTE+ and HTE– of the ECM.

HINT:

The correct waveform is as shown.

OK	**Replace ECM.**

NG

2	**Check for open and short in harness and connector between HTE+ and HTE– of ECM and HTE+ and HTE– of HV ECU (See page IN–41).**

OK	**Replace HV ECU.**

NG

Repair or replace harness or connector.

DI7T5–01

DTC	P1637	ESTP Signal Malfunction

CIRCUIT DESCRIPTION

DTC No.	DTC Detecting Condition	Trouble Area
P1637	When signal of ESTP is not input from the HV ECU for 2 sec. or more	• Wire harness • HV ECU • ECM

WIRING DIAGRAM

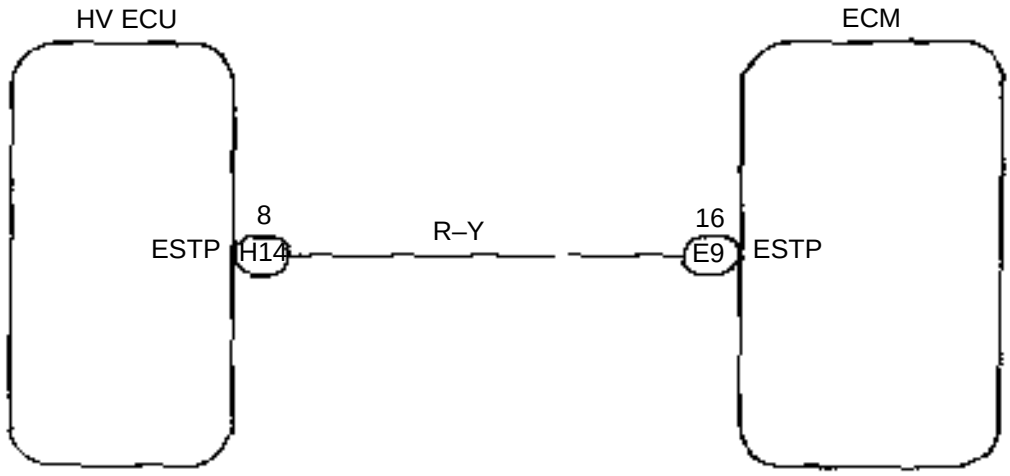

F02660

INSPECTION PROCEDURE

1	**Check voltage between terminal ESTP of ECM and body ground.**

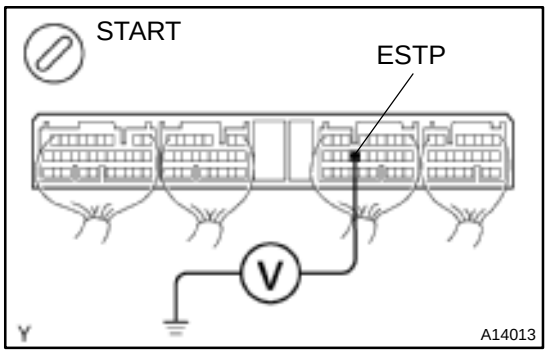

PREPARATION:

(a) Remove the ECM with connector still connected (See page SF–62).

(b) Start the engine.

CHECK:

Measure voltage between terminal ESTP of ECM and body ground.

OK:

Voltage: 9 – 14 V

OK	**Replace ECM.**

NG

2	**Check for open and short in harness and connector between ESTP of ECM and HV ECU (See page IN–41).**

OK	**Replace HV ECU.**

NG

Repair or replace harness or connector.

DI6VO–02

DTC	P1656	OCV Circuit Malfunction

CIRCUIT DESCRIPTION

Refer to DTC P1349 on page DI–121.

DTC No.	DTC Detecting Condition	Trouble Area
P1656 P1663	Open or short in oil control valve circuit	• Open or short in oil control valve circuit • Oil control valve • ECM

WIRING DIAGRAM

Refer to DTC P1349 on page DI–121.

INSPECTION PROCEDURE

HINT:

Read freeze frame data using TOYOTA hand–held tester or OBD II scan tool. Because freeze frame records the engine conditions when the malfunction is detected, when troubleshooting it is useful for determining whether the vehicle was running or stopped, the engine warmed up or not, the air–fuel ratio lean or rich, etc. at the time of the malfunction.

TOYOTA hand–held tester

1	**Check OCV circuit.**

PREPARATION:

(a) Start the engine and warmed it up.

(b) Connect the TOYOTA hand–held tester and select VVT from ACTIVE TEST menu.

CHECK:

Check the engine speed when operate the OCV by the TOYOTA hand–held tester.

OK:

VVT system is OFF (OCV is OFF): Normal engine speed

VVT system is ON (OCV is ON): Rough idle or engine stalled

OK → **Check for intermittent problems (See page DI–3).**

NG

2	**Check operation of OCV.**

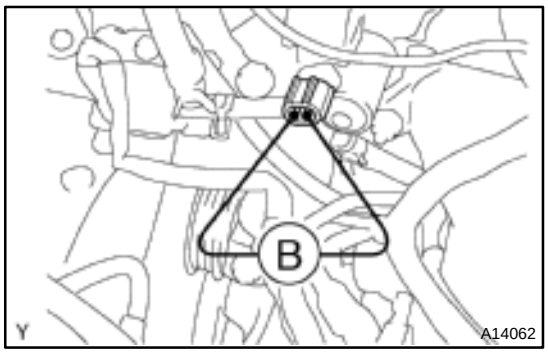

PREPARATION:

(a) Start the engine and warmed it up.
(b) Disconnect the OCV connector.
(c) Apply battery positive voltage between terminals of the OCV.

CHECK:

Check the engine speed.

OK:

Rough idle or engine stalled.

NG → **Replace OCV.**

OK

3	**Check voltage between terminals OCV+ and OCV– of ECM connector (See page DI–121).**

NG → **Check and replace ECM (See page IN–41).**

OK

4	**Check for open and short in harness and connector between OCV and ECM (See page IN–41).**

NG → **Repair or replace.**

OK

Check for intermitent problems (See page DI–3).

OBD II scan tool (excluding TOYOTA hand–held tester)

1	**Check operation of OCV.**

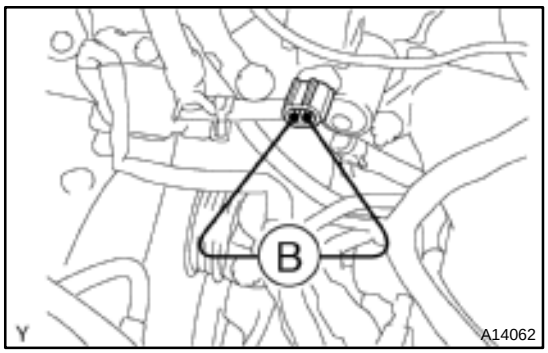

PREPARATION:

(a) Start the engine and warmed it up.
(b) Disconnect the OCV connector.
(c) Apply battery positive voltage between terminals of the OCV.

CHECK:

Check the engine speed.

OK:

Rough idle or engine stalled

NG → **Replace OCV.**

OK

2	**Check voltage between terminals OCV+ and OCV– of ECM connector (See page DI–121).**

NG → **Check and replace ECM (See page IN–41).**

OK

3	**Check for open and short in harness and connector between OCV and ECM (See page IN–41).**

NG → **Repair or replace.**

OK

Check for intermitent problems (See page DI–3).

DI7T6–01

DTC	P3190	Poor Engine Power

DTC	P3191	Engine dose not Start

CIRCUIT DESCRIPTION

From the HV ECU, the ECM receives data such as power output required for the engine (required output), estimated torque produced by the engine (estimated torque), engine RPM of control target (target RPM), whether the engine is in start mode or not. Then, based on the required output and target RPM, the ECM calculates a target torque that is to be produced by the engine and compares it with the estimated torque. If the estimated torque is very low compared with the target torque, or the engine start mode continues at the engine RPM or for the duration calculated by water temperature, an abnormal condition is detected.

DTC No.	DTC Detecting Condition	Trouble Area
P3190	Following condition (a) to (e) continues at a fixed engine RPM or a fixed length of time: (a) Communication with HV ECU is normal. (b) Engine RPM is a fixed value or more. (c) Engine star mode is not active. (d) Target torque is a fixed value or more. (e) Ratio of estimated torque against target torque is less than 20 %.	• Air induction system • Throttle body • Fuel pressure • Engine • Air flow meter • Out of fuel • Water temp. sensor • Crankshaft position sensor • Camshaft position sensor • ECM
P3191	Following condition (a) to (c) continues at a fixed engine RPM or for a fixed length of time: (a) Vommunication with HV ECU is normal. (b) Engine RPM is a fixed value or more. (c) Engine start mode is active.	

WIRING DIAGRAM

Refer to DTC P1636 on page DI–146.

INSPECTION PROCEDURE

1	Are there any other codes begin output?

YES → Go to relevant DTC chart.

NO

2	Check remaining amount of fuel.

NG → Supply fuel.

OK

3	Check air induction system (See page SF–1).

NG → Repair or replace.

OK

4	Check for umusual noise or vibration when starting engine or racing.

NG → Repair or replace.

OK

5	Check fuel pressure (See page SF–6).

NG → Check and repair fuel pump and fuel pipe line (See page SF–19).

OK

6	Check air flow meter (See page SF–22) and engine coolant temp. sensor (See page SF–49).

NG → Repair or replace.

OK

7	Check crankshaft position sensor and camshaft position sensor (See page IG–1).

NG → Repair or replace.

OK

8	Check throttle control motor and throttle position sensor (See page SF–24).

NG → Repair or replace.

OK

Chack and replace ECM (See page IN–41).

ECM Power Source Circuit

CIRCUIT INSPECTION

When the ignition switch is turned on, battery positive voltage is applied to IG2 Relay, terminal IGSW of the ECM and the EFI main relay (Marking: EFI MAIN) control circuit in the ECM sends a signal to terminal MREL of the ECM switching on the EFI main relay.

This signal causes current to flow to the coil, closing the contacts of the EFI main relay and supplying power to terminals +B of the ECM.

If the ignition switch is turned off, the ECM continues to switch on the EFI main relay for a maximum of 2 seconds for the initial setting of the IAC valve.

WIRING DIAGRAM

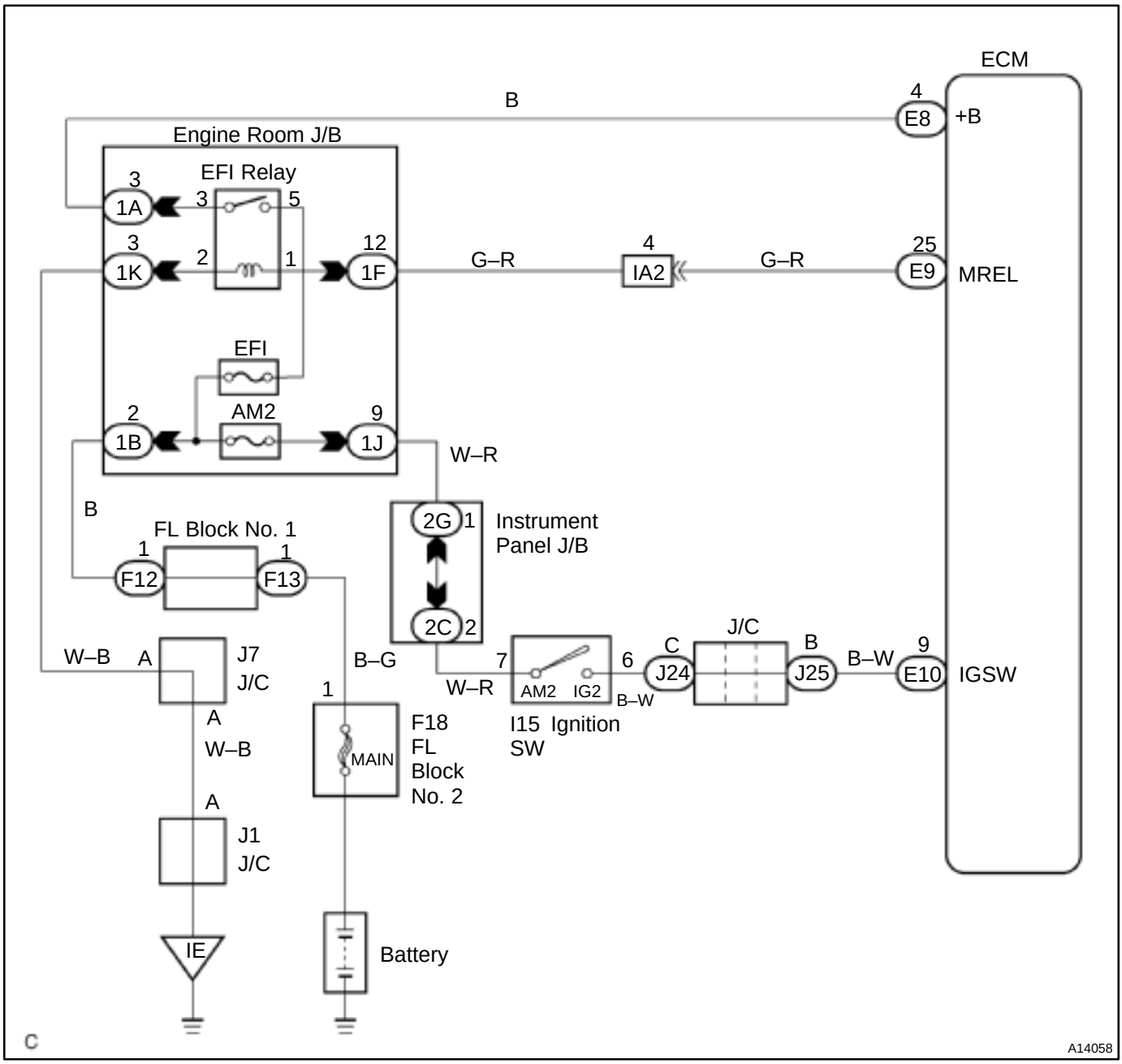

INSPECTION PROCEDURE

1	**Check voltage between terminals +B and E1 or ECM connectors.**

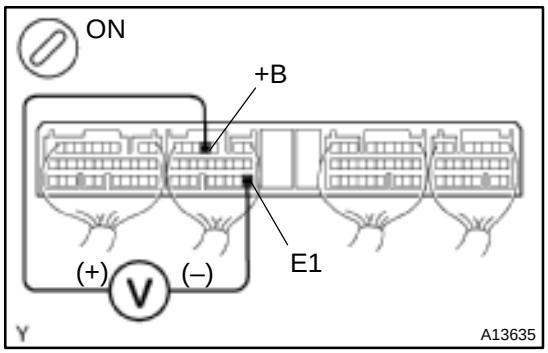

PREPARATION:

(a) Remove the ECM with connector still connected (See page SF–62).

(b) Turn the ignition switch ON.

CHECK:

Measure the voltage between terminals +B and E1 of the ECM connectors.

OK:

Voltage: 9 – 14 V

OK	**Proceed to next circuit inspection shown on problem symptoms table (See page DI–22).**

NG

2	**Check for open in harness and connector between terminal E1 of ECM connector and body ground (See page IN–41).**

NG	**Repair or replace harness or connector.**

OK

3	**Check voltage between terminal IGSW of ECM connector and body ground.**

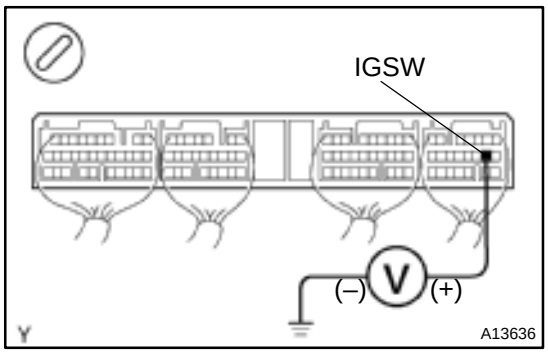

PREPARATION:

(a) Remove the ECM with connector still connected (See page SF–62).

(b) Turn the ignition switch ON.

CHECK:

Measure the voltage between terminal IGSW of the ECM connector and body ground.

OK:

Voltage: 9 – 14 V

OK	**Go to step 6.**

NG

4	**Check AM2 fuse.**

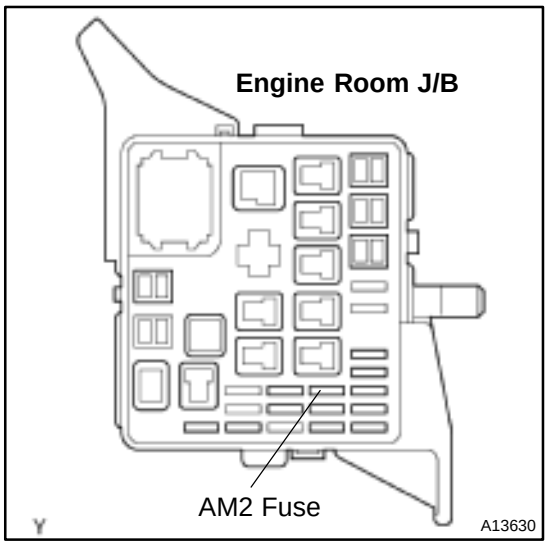

PREPARATION:
Remove the AM2 fuse from the engine room J/B.
CHECK:
Check the continuity of the AM2 fuse.
OK:
Continuity

NG → **Check for short in all harness and components connected to AM2 fuse (See attached wiring diagram).**

OK

5	**Check ignition switch (See page BE–16).**

NG → **Replace ignition switch.**

OK

Check and repair harness and connector between battery and ignition switch, and ignition switch and ECM.

6	Check voltage between terminal MREL of ECM connector and body ground.

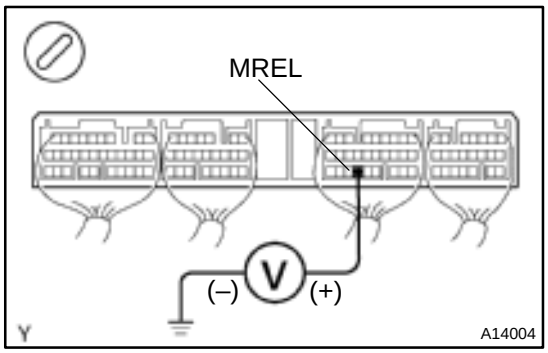

PREPARATION:

(a) Remove the ECM with connector still connected (See page SF–62).

(b) Turn the ignition switch ON.

CHECK:

Measure the voltage between terminal MREL of the ECM connector and body ground.

OK:

Voltage: 9 – 14 V

NG	Check and replace ECM (See page IN–41).

OK

7	Check EFI1 fuse.

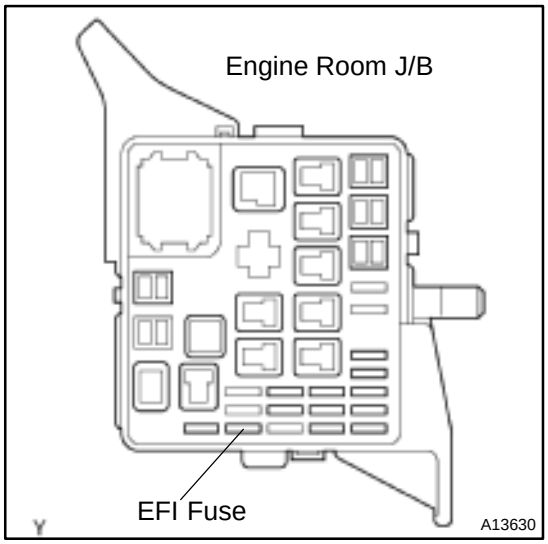

PREPARATION:

Remove the EFI fuse from the engine room J/B.

CHECK:

Check continuity of EFI fuse.

OK:

Continuity

NG	Check for short in all harness and components connected to EFI1 fuse (See attached wiring diagram).

OK

8	Check EFI main relay (Marking: EFI MAIN) (See page SF–37).

NG	Replace EFI main relay.

OK

9	**Check for open and short in harness and connector between terminal MREL of ECM and body ground (See page IN–41).**

NG → **Repair or replace harness or connector.**

OK

Check and repair harness or connector between EFI1 fuse and battery.

DI7T7–01

Fuel Pump Control Circuit

CIRCUIT DESCRIPTION

When starting the engine with ignition switch:
HV ECU receives ST signal and decides to start the engine, and send the signal of the engine start prior signal to the engine ECU by the communicatio between the engine ECU and HV ECU.
Engien ECU receives that signal and turns ON the circuit opening relay slightly earlier, then turns the fuel pump.
When starting the engine in an intermittent operation:
With the cranking by MG1, NE signal comes in immediately, so the engine ECU receives the generation of NE signal and turns the fuel pump. (At this time, no refernce of the communication from HV ECU)
When stopping the fuel pump:
When the signal to stop the engine comes in to the engine ECU from HV ECU from HV ECU side, the fuel pump stops.
At the time of the fuel cut opetation such as deceleration by the engine brake, the fuel pump stops.

WIRING DIAGRAM

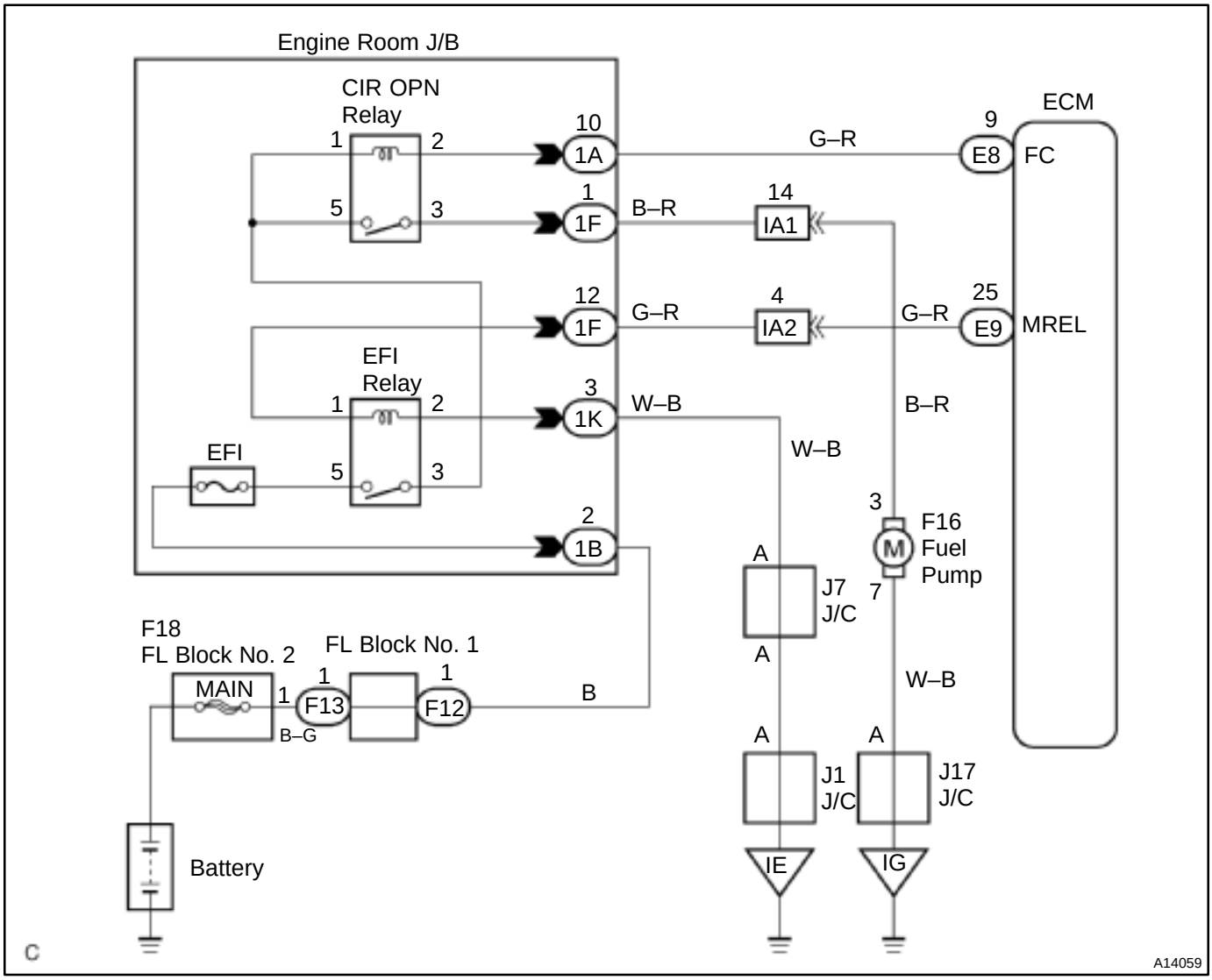

INSPECTION PROCEDURE
TOYOTA hand–held tester:

1	Connect TOYOTA hand–held tester and check operation of fuel pump (See page DI–3).

OK → Proceed to next circuit inspection shown on problem symptoms table (See page DI–22).

NG

2	Check for ECM power source circuit (See page DI–156).

NG → Repair or replace.

OK

3	Check circuit opening relay (Marking: C/OPN) (See page SF–38).

NG → Replace circuit opening relay.

OK

4	Check voltage between terminal FC of ECM and body ground.

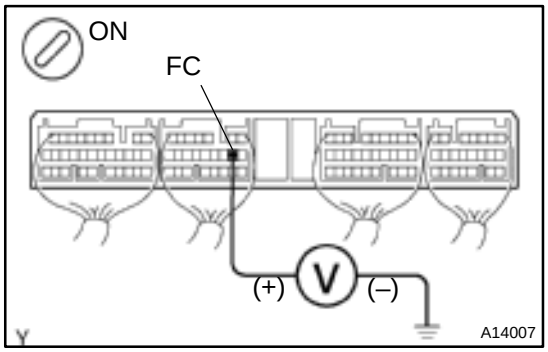

PREPARATION:

(a) Remove the ECM with connector still connected (See page SF–62).

(b) Turn the ignition switch ON.

CHECK:

Measure the voltage between terminal FC of the ECM and body ground.

OK:

Voltage: 9 – 14 V

OK → Go to step 5.

NG

Check for open in harness and connector between EFI main relay and circuit opening relay (Marking: C/OPN), circuit opening relay and ECM (See page IN–41).

5	Check fuel pump (See page SF–6).

NG → Repair or replace fuel tank assembly.

OK

6	Check for open in harness and connector between circuit opening relay and fuel pump and body ground (See page IN–41).

NG → Repair or replace harness or connector.

OK

Check and replace ECM (See page IN–41).

OBD II scan tool (excluding TOYOTA hand–held tester):

1	**Check operation of fuel pump.**

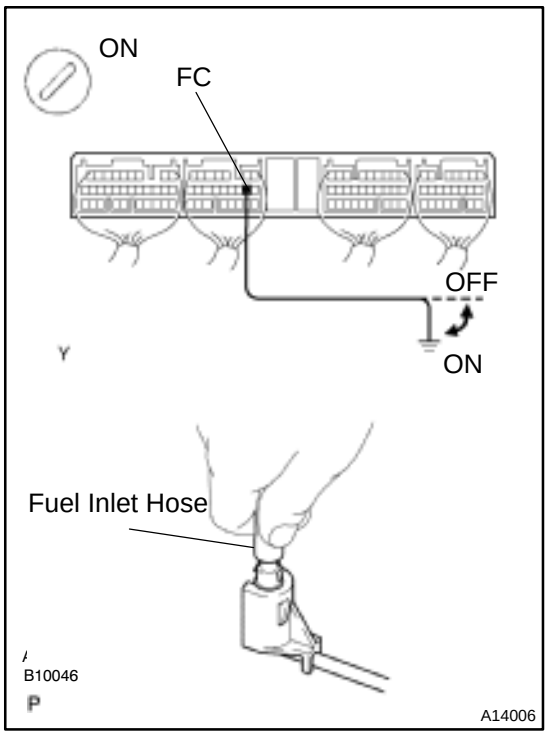

PREPARATION:

(a) Remove the ECM with connector still connected (See page SF–62).

(b) Turn the ignition switch ON.

CHECK:

(a) Connect between terminal FC of the ECM connector and body ground.

(b) Check for fuel pressure in the fuel inlet hose when it is pinched off.

OK:

There is pressure in fuel inlet hose.

HINT:

At this time, you will hear a fuel return flowing noise.

OK	**Proceed to next circuit inspection shown on problem symptoms table (See page DI–22).**

NG

2	**Check for ECM power source circuit (See page DI–156).**

NG	**Repair or replace.**

OK

3	**Check circuit opening relay (Marking: C/OPN) (See page SF–38).**

NG	**Replace circuit opening relay.**

OK

4	Check voltage between terminal FC of ECM and body ground (See page DI–161).

OK → Go to step 5.

NG

Check for open in harness and connector between EFI main relay and circuit opening relay (Marking: C/OPN), circuit opening relay and ECM (See page IN–41).

5	Check fuel pump (See page SF–6).

NG → Repair or replace fuel tank assembly.

OK

6	Check for open in harness and connector between circuit opening relay and fuel pump and body ground (See page IN–41).

NG → Repair or replace harness or connector.

OK

Check and replace ECM (See page IN–41).

MIL Circuit Malfunction

CIRCUIT DESCRIPTION

If the ECM detects trouble, the MIL lights up. At this time, the ECM records a DTC in memory.
HINT:
When the ignition switch is ON and ”READY” indicator light is OFF, the bulb check of the ”MIL” is performed (”MIL” is ON).
When ”MIL” is ON, but the DTC of the engine is not memorized, it may be because of HV control system abnormality, so check HV control system beforehand.

WIRING DIAGRAM

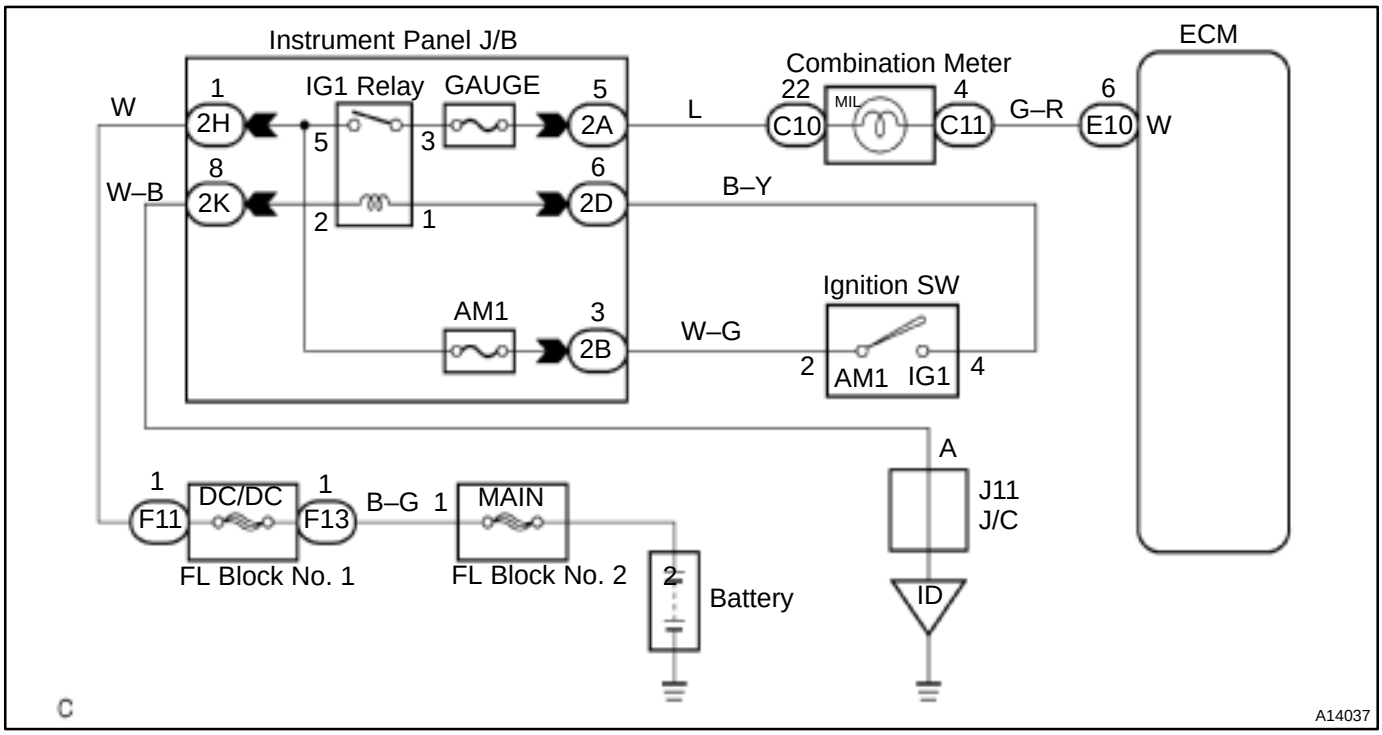

INSPECTION PROCEDURE

HINT:
Troubleshoot in accordance with the chart below for each trouble symptom.

MIL does not light up	Start inspection from step 1 in case of using TOYOTA hand–held tester and start from step 2 in case of not using TOYOTA hand–held tester
MIL remains on	After inspection of step 3, start inspection from step 4 in case of using TOYOTA hand–held tester and start from step 5 in case of not using TOYOTA hand–held tester

1	**Inspect diagnosis (normal mode, check mode) (See page DI–3).**

OK → **Check and replace ECM (See page IN–41).**

NG

2	**Check MIL.**

See combination meter troubleshooting on page BE–2.

NG → **Repair or replace bulb or combination meter assembly.**

OK

3	**Check that ECM connectors are securely connected to ECM.**

NO → **Connect connector to ECM.**

YES

Check for open circuit in harness and connector between combination meter and ECM (See page IN–41).

4	**Check operation of MIL (See step 1).**

OK → **Check and replace ECM (See page IN–41).**

NG

5	**Is any DTC output?**

Check DTC on page DI–14.

YES → **Repair circuit indicated by output code.**

NO

6	**Check IG1 relay (Marking: IG1).**

NG → **Replace IG1 relay.**

OK

Check for short circuit in harness and connector between DLC3 and ECM (See page IN–41).

DI7DL–02

TC Terminal Circuit

CIRCUIT DESCRIPTION

Terminal TC and CG are located in the DLC3. When connecting these terminals, DTCs in normal mode or test mode can be read through the MIL flashing in the combination meter.

WIRING DIAGRAM

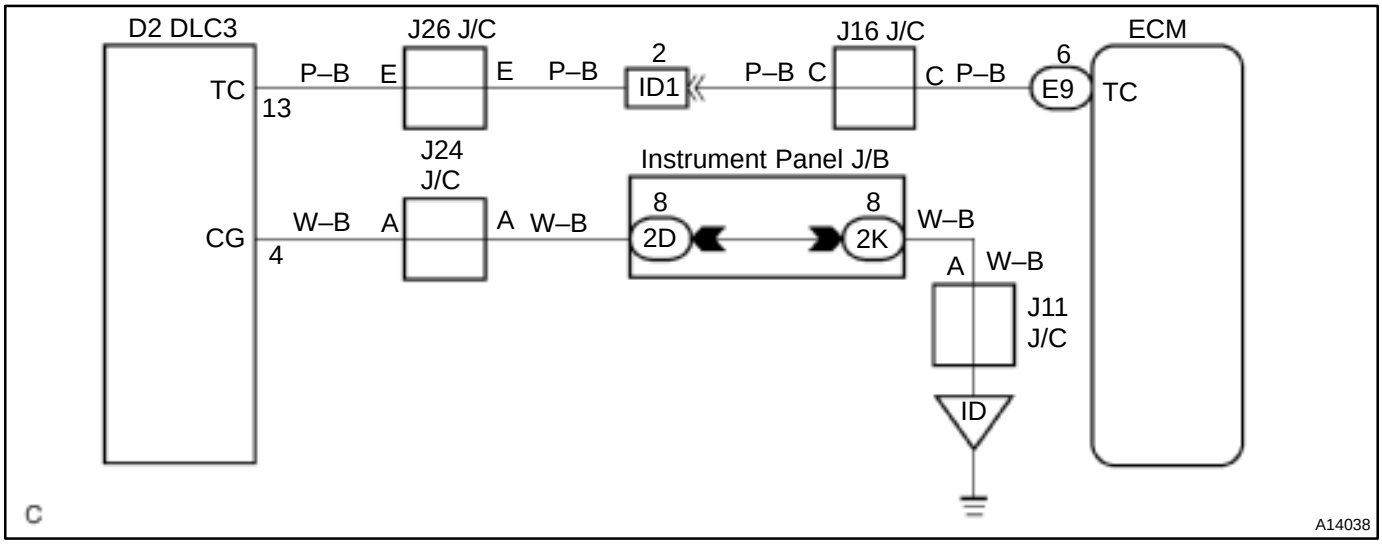

INSPECTION PROCEDURE

HINT:

- Even though terminal TC is not connected with terminal CG, the MIL blinks.
- For the above phenomenon,an open or short in the wire harness, or malfunction inside the ECM is the likely cause.

1	**Check voltage between terminals TC and CG of DLC3.**

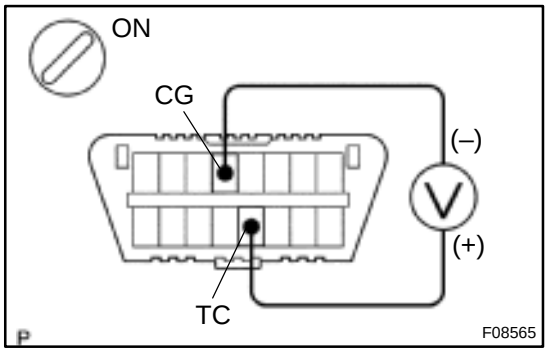

PREPARATION:

Turn the ignition switch ON.

CHECK:

Measure the voltage between terminals TC and CG of the DLC3.

OK:

Voltage: 9 – 14 V

OK	**Check and replace ECM (See page IN–41).**

NG

2	Check continuity between terminal CG of DLC3 and body ground.

NG → Repair or replace harness or connector.

OK

3	Check for open and short circuit in harness and connector between ECM and DLC3, and DLC3 and body ground (See page IN–41).

NG → Repair or replace harness or connector.

OK

Check and replace ECM (See page IN–41).

DI7T8–01

A/C Cut Control Circuit

CIRCUIT DESCRIPTION

This circuit cuts air conditioning operation during vehicle acceleration in order to increase acceleration performance. During acceleration with the vehicle speed at (AT: 25 km/h (16 mph), MT: 40 km/h (25 mph)) or less, engine speed at (AT: 1,200 rpm, MT:1,600 rpm) or less and throttle valve opening angle at 60° or more, the A/C magnet switch is turned OFF for several seconds.

WIRING DIAGRAM

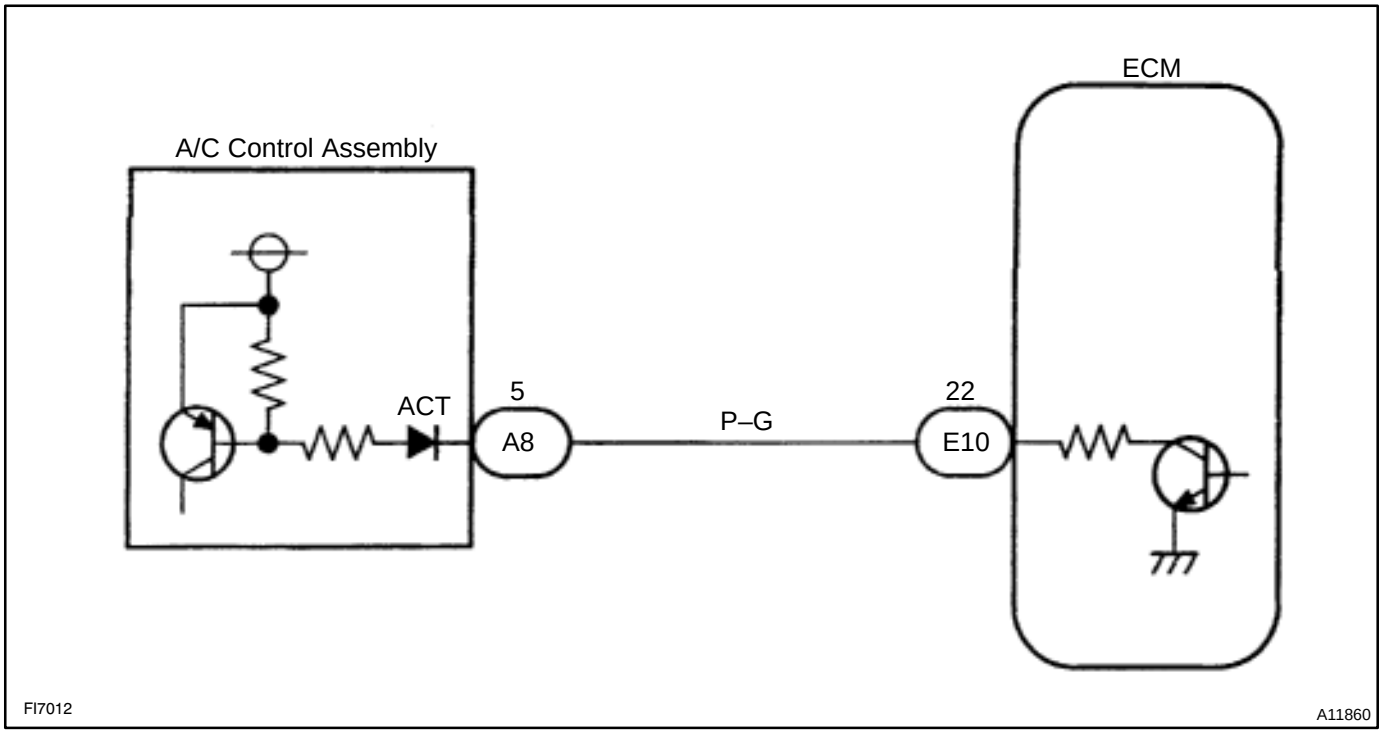

INSPECTION PROCEDURE

TOYOTA hand–held tester:

1	**Connect the TOYOTA hand–held tester and check operation of air conditioning cut control.**

PREPARATION:

(a) Connect the TOYOTA hand–held tester to the DLC3.
(b) Turn the ignition switch ON and TOYOTA hand–held tester main switch ON.
(c) Start the engine and air conditioning switch ON.

HINT:

A/C magnet clutch is turned ON.

(d) Select the ACTIVE TEST mode on the TOYOTA hand–held tester.

CHECK:

Check operation of A/C magnet clutch cut when air conditioning cut control is operated by the TOYOTA hand–held tester.

OK:

A/C magnet clutch is turned OFF.

OK → Proceed to next circuit inspection shown on problem symptom table. (See page DI–22)

NG

2	Check for open and short in harness and connector between ECM and A/C amplifier. (See page IN–41)

NG → Repair or replace harness or connector.

OK

3	Check voltage between terminal ACT of ECM and body ground.

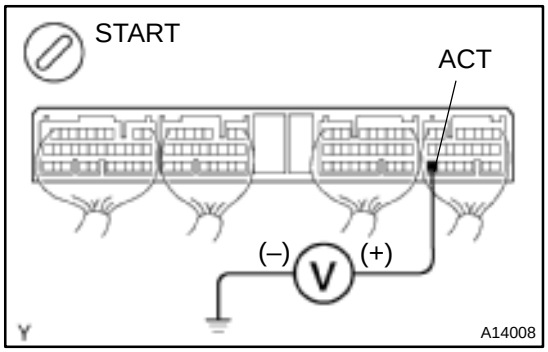

PREPARATION:

(a) Remove the ECM with connector still connected (See page SF–62).

(b) Start the engine.

CHECK:

Measure voltage between terminal ACT of ECM connector and body ground when A/C switch is turned to ON and OFF.

OK:

A/C switch condition	Voltage
ON	9 – 14 V
OFF	Below 1.5 V

NG → Check and replace A/C amplifier.

OK

Check and replace ECM. (See page IN–41)

OBDII scan tool (excluding TOYOTA hand–held tester):

1	**Check voltage between terminal ACT of ECM and body ground.**

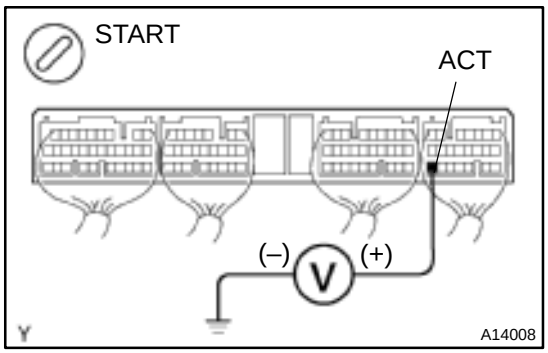

PREPARATION:
Start the engine.
CHECK:
Measure voltage between terminal ACT of ECM connector and body ground when A/C switch is turned to ON and OFF.
OK:

A/C switch condition	Voltage
ON	9 – 14 V
OFF	Below 1.5 V

OK → **Check and repair ECM. (See page IN–41)**

NG

2	**Check for open and short in harness and connector between ECM and A/C amplifier. (See page IN–41)**

NG → **Repair or replace harness or connector.**

OK

Check and replace A/C amplifier.

DI82J–02

CUSTOMER PROBLEM ANALYSIS CHECK

Prius Problem Check Sheet

Please fill in the blanks within bold frame.

Name of Dealer	Person in Charge at Headquarters	Person in Charge at Dealer
Office		

Vehicle Specifications

Model Code	NHW11–	Problem Occurrence Date	. . . :	Odometer Reading	km miles
Frame No.		Service Entry Date	. .	Registration date	. .
Unit No. etc.		Vehicle Delivery Date	. .		
Option	( ) Navigation (equipped by ( ) MOP ( ) dealer) ( ) Cold climate specification ( ) others( )				

Interview Results

Contents of complaint (Status when and before/after occurring in the order of events as correct as possible)

Characteristics of Customer

Gender	( ) Male ( ) Female
Age	
Occupation	
Vehicle used before	
Main use area	city area ( ) % suburbs ( ) % mountain area ( ) % Others ( ) ( ) %
Frequency in use	times/day or week or month
Others	

Driving Condition	Road Condition	Vehicle Condition			Others
Vehicle Speed _____km/h _____ mph ( ) when starting ( ) when according ( ) When normal driving ( ) when decelerating ( ) when braking ( ) when shopping ( ) when parking ( ) when turning ( ) when ABS actuating ( ) others ( )	( ) flat road ( ) up hill ( ) down hill incline of _____° /% distance _____ km _____ mph ( ) dry paved road ( ) wet paved road ( ) rough paved road ( ) unpaved road ( ) snowy/frozen road ( ) bump/curb ( ) others ( )	( ) when starting ( ) right after starting ( ) until ___min. after starting ( ) until ___min. after starting of driving ( ) when shopping system Status of engine ( ) while shopping engine ( ) when starting engine ( ) when revolving engine	HV Battery indication ( ) 4/4 ( ) 3/4 ( ) 2/4 ( ) 1/4 ( ) unidentified Shift position (indication) ( ) P ( ) R ( ) N ( ) D ( ) B ( ) when operating _____ → _____ ( ) no indication ( ) unidentified A/C status ( ) A/C ( ) FULL ( ) OFF ( ) unidentified	Warning light (MIL) ( ) ON ( ) OFF ( ) PS ( ) main battery ( ) HV! ( ) engine ( ) charge ( ) output control ( ) brake ( ) ABS ( ) others ( )	Weather:_____ Temperature: _____ °C _____ °F Brake operation ( ) brake slowly ( ) Brake suddenly ( ) use two pedals system Frequency in occurrence ( ) always ( ) sometimes ( ) only once Fuel level ( ) segments

Vehicle Verification Results

Verification Results of Warning Light	Verification Results of Diagnostic Code	
( ) ON ( ) OFF ( ) engine ( ) HV ( ) HV battery ( ) output control warning light ( ) charge ( ) PS ( ) brake ( ) ABS ( ) others ( )	Engine	
	HV	
	INF. code	
	HV battery	
	Brake	
	PS	

Vehicle Inspection Results (Verification items, reason to identify/presume the cause parts, etc.)	Duplication Status
	( ) always ( ) sometimes ( ) no reproduction
Replacement Parts	**Confirmation Results After Repair**
problem parts: No/Yes (Sending date: . .)	( ) Normal ( ) reproduction ( ) others ( )

DI82K–02

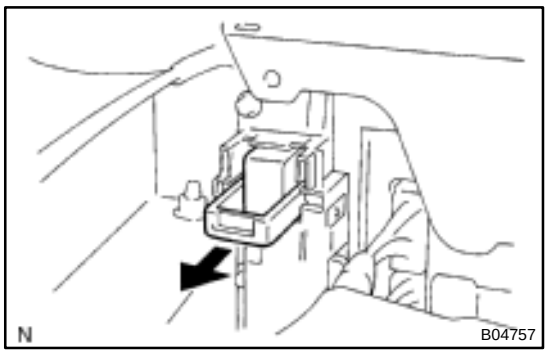

PRE–CHECK

1. PRECAUTION

(a) When distinguishing trouble and replace the defective part, take necessary preventive measures against an electric shock (See page IN–4).

(b) Some portions of the wiring harness in the THS vehicle have circuits to which a high voltage is applied. To prevent an electrical shock, be sure to observe the following:
  (1) Wear insulated gloves during inspection.
  (2) Remove a service plug and do not start any repair operation before 5 minutes have passed. Then, confirm that the voltage at the output terminals has dropped down to 12 V or less.
  (3) Use insulated tools during inspection.
  (4) When disengaging the wiring connectors, hold the connector bodies to avoid pulling the wires. When engaging the wiring connectors, be sure to engage them securely.

(c) Do not leave the tools or parts (bolts, nuts, etc.) inside the cabin.

(d) Do not carry metallic objects such as mechanical pencils or scales.

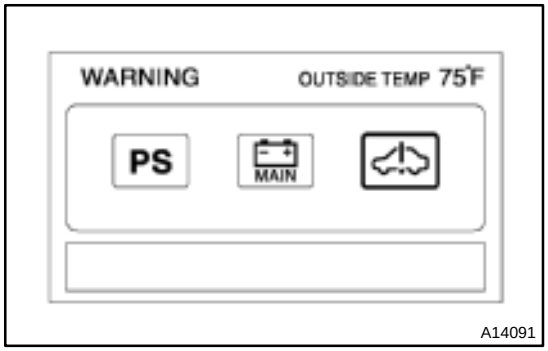

2. DIAGNOSIS SYSTEM

(a) Description

- The HV control ECU has a self–diagnosis system by which malfunction in the computer itself or in THS components is detected and the Hybrid vehicle warning light in the multi–information display are lighted up.

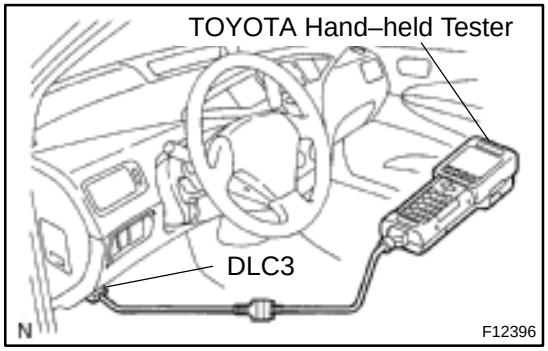

- To check the Diagnostic Trouble Codes (DTC), connect the hand–held tester to the Data Link Connector 3 (DLC3) on the vehicle. The TOYOTA hand–held tester also enables you to erase the DTC and check freeze frame data and various forms of THS data.

- Freeze frame data:
  As the freeze frame data records the driving condition when a malfunction is detected, when troubleshooting, it is useful for determining whether the vehicle was running, braked, stopped or reversed.

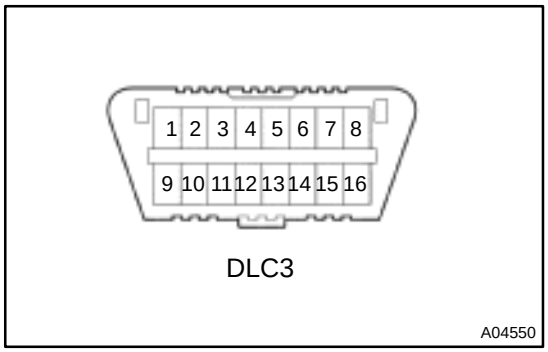

(b) Check the DLC3.
The HV control ECU conforms to ISO 14230 for communication.
The terminal arrangement of the DLC3 complies with SAEJ1962 and matches the ISO 14230 format.

Terminal No.	Connection/Voltage or Resistance	Condition
7	Bus ⊕ Line/Pulse generation	During transmission
4	Chassis Ground ↔ Body Ground/1 Ω or less	Always
5	Signal Ground ↔ Body Ground/1 Ω or less	Always
16	Battery Positive ↔ Body Ground/10 – 15 V	Always

HINT:
If your display shows UNABLE TO CONNECT TO VEHICLE when you have connected the cable of the TOYOTA hand–held tester to the DLC3, turned the motor switch ON and operated the tester, there is a problem in the vehicle or tool.

- If communication is normal when the tool is connected to another vehicle, inspect the DLC3 on the original vehicle.
- If communication is still not possible when the tool is connected to another vehicle, the problem is probably in the tool itself, so consult the Service Department.

3. INSPECT DIAGNOSIS

(a) Check the auxiliary battery.
(1) Measure the voltage of the auxiliary battery.
Voltage: 10 – 15 V
(2) Inspect the auxiliary battery, fuses, fusible links, wiring harness, connectors and ground.



(b) Check the master warning light.
(1) Turn the ignition switch ON and confirm that the master warning light comes on.

HINT:
If the master warning light does not come on, suspect a burnt fuse, burnt bulb, or open in wiring harness.

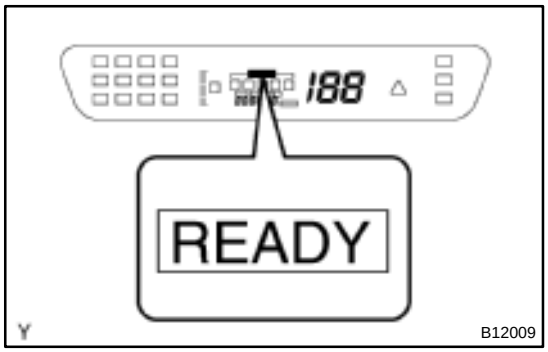

(2) When the "READY" light is ON, the master warning light should go off.

If the lamp remains on, the diagnosis system has detected a malfunction in the system or the meassage such as "When you park your care, make sure you shift to Park P." and "The batteries will not charge if the shifter is N" appears on the multi–information display.
Since DTC may be stored even though the lamp is OFF, be sure to check DTC.

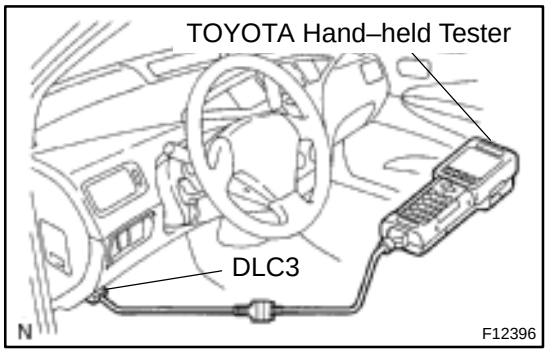

(c) Check the DTC.
(1) Prepare a TOYOTA hand–held tester.
(2) Connect the TOYOTA hand–held tester to the DLC3.
(3) Turn the ignition switch ON and push the TOYOTA hand–held tester main switch ON.
(4) Use the TOYOTA hand–held tester to check the DTC, information code and freeze frame data and note them down. (For operating instructions, see the TOYOTA hand–held tester operator's manual).

HINT:
- For one DTC, the HV diagnosis system can memorize more than one information code and freeze frame data corresponding to them. Therefore, when troubleshooting, check all of the information codes, record the freeze frame data and then start inspection according to the procedures of "Circuit Inspection".
- The HV ECU is communicating with each ECU of the engine brake, HV battery and EMPS. So, if a warning is output from the HV control system, check and record DTCs of all ECUs. (See tables on the following pages.)

(5) See a related page to confirm details of the DTC.

HV ECU–DTC & Information #

DTC		INFORMATION 1	
		INFORMATION 2	
		INFORMATION 3	
		INFORMATION 4	
		INFORMATION 5	

DTC		INFORMATION 1	
		INFORMATION 2	
		INFORMATION 3	
		INFORMATION 4	
		INFORMATION 5	

DTC		INFORMATION 1	
		INFORMATION 2	
		INFORMATION 3	
		INFORMATION 4	
		INFORMATION 5	

DTC		INFORMATION 1	
		INFORMATION 2	
		INFORMATION 3	
		INFORMATION 4	
		INFORMATION 5	

HV ECU–Information & Freezed frame data

INFORMATION	
MG1 REV	rpm
MG2 REV	rpm
MG1 TORQ	N·m
MG2 TORQ	N·m
POWER RQST	W
ENGINE SPD	rpm
MCYL CTRL POWER	Nm
SOC	%
WOUT CTRL POWER	W
WIN CTRL POWER	W
DRIVE CONDITION	
INVERT TEMP – MG1	°F (°C)
INVERT TEMP – MG2	°F (°C)
MG1 TEMP	°F (°C)
MG2 TEMP	°F (°C)
PWR RESOURCE VM	V
PWR RESOURCE IB	A
SHIFT SENSOR 1	
ACC SENSOR MAIN	V
ENG STOP RQST	Yes / No
IDLING REQUEST	Yes / No
ENGINE FUEL CUT	Yes / No

HV BATT CH RQST	Yes / No
HCAC ABSRT RQST	Yes / No
ENG WARM UP RQT	Yes / No
STOP SW COND	Yes / No
CRUISE CONTROL	Yes / No
AUX. BATT V	V
EXCLUSIVE INFO1	
EXCLUSIVE INFO2	
EXCLUSIVE INFO3	
EXCLUSIVE INFO4	
EXCLUSIVE INFO5	
EXCLUSIVE INFO6	
LOAD CONDITION	MG1 / MG2
DRIVING PATTEN1	
DRIVING PATTEN2	
DRIVING PATTEN3	
IG OFF IN DRVIN	Yes / No
SG B IN REDUCIN	Yes / No
SG N IN REDUC/P	Yes / No
STEP ACC&BRAKE	Yes / No
IG OFF TIME	min
OCCURRENCE ORDER	–

HV ECU–Operation History Data

SHIFT BEF READY	LATEST OPER	
	LATEST TRIP	
	1 BEF LATST OR	
	1 BEF LATST TRP	
	2 BEF LATST OR	
	2 BEF LATST TRP	

N RANGE CTRL 1	LATEST OPER	
	LATEST TRIP	
	1 BEF LATST OR	
	1 BEF LATST TRP	
	2 BEF LATST OR	
	2 BEF LATST TRP	

N RANGE CTRL 2	LATEST OPER	
	LATEST TRIP	
	1 BEF LATST OR	
	1 BEF LATST TRP	
	2 BEF LATST OR	
	2 BEF LATST TRP	

STEP ACCEL IN N	LATEST OPER	
	LATEST TRIP	
	1 BEF LATST OR	
	1 BEF LATST TRP	
	2 BEF LATST OR	
	2 BEF LATST TRP	

AUX. BATT LOW	LATEST OPER	
	LATEST TRIP	
	1 BEF LATST OR	
	1 BEF LATST TRP	
	2 BEF LATST OR	
	2 BEF LATST TRP	

HV INTERMITTENT	LATEST OPER	
	LATEST TRIP	
	1 BEF LATST OR	
	1 BEF LATST TRP	
	2 BEF LATST OR	
	2 BEF LATST TRP	

MG2 TEMP HIGH	LATEST OPER	
	LATEST TRIP	
	1 BEF LATST OR	
	1 BEF LATST TRP	
	2 BEF LATST OR	
	2 BEF LATST TRP	

MG1 TEMP HIGH	LATEST OPER	
	LATEST TRIP	
	1 BEF LATST OR	
	1 BEF LATST TRP	
	2 BEF LATST OR	
	2 BEF LATST TRP	

MG2 INV TEMP HIGH	LATEST OPER	
	LATEST TRIP	
	1 BEF LATST OR	
	1 BEF LATST TRP	
	2 BEF LATST OR	
	2 BEF LATST TRP	

MG1 INV TEMP HIGH	LATEST OPER	
	LATEST TRIP	
	1 BEF LATST OR	
	1 BEF LATST TRP	
	2 BEF LATST OR	
	2 BEF LATST TRP	

MAIN BATT LOW	LATEST OPER	
	LATEST TRIP	
	1 BEF LATST OR	
	1 BEF LATST TRP	
	2 BEF LATST OR	
	2 BEF LATST TRP	

RESIST OVR HEAT	LATEST OPER	
	LATEST TRIP	
	1 BEF LATST OR	
	1 BEF LATST TRP	
	2 BEF LATST OR	
	2 BEF LATST TRP	

ACCEL MODE 1	SHIFT POSITION	
	BRAKE TORQ	N·m
	MG2 TORQ	N·m
	MG1 TORQ	N·m
	VEHICLE SPD	mph(km/h)
	ACC THROTTLE	%
	OCCURRENCE TRIP	

ACCEL MODE 2	SHIFT POSITION	
	BRAKE TORQ	N·m
	MG2 TORQ	N·m
	MG1 TORQ	N·m
	VEHICLE SPD	mph(km/h)
	ACC THROTTLE	%
	OCCURRENCE TRIP	

ACCEL MODE 3	SHIFT POSITION	
	BRAKE TORQ	N·m
	MG2 TORQ	N·m
	MG1 TORQ	N·m
	VEHICLE SPD	mph(km/h)
	ACC THROTTLE	%
	OCCURRENCE TRIP	

REGEN IH FACTOR	OVER VOLTAGE	Yes / No
	OVER CURRENT	Yes / No
	MG2 TEMP HIGH	Yes / No
	MG1 TEMP HIGH	Yes / No
	BATTERY FULL	Yes / No
	CHG RESTRICTION	Yes / No
	REGN BRK INFECT	Yes / No

BATT SAVE RQST	BATT LOW VOLT	Yes / No
	DISCHAG INHIBIT	Yes / No
	N RANG OVR TIME	Yes / No
	BATT HIGH VOLT	Yes / No
	BATT OVER LOAD	Yes / No
	BATT HIGH TEMP	Yes / No

DRIVING PATTERN	LOAT CONDITION	
	DRIVING PATTEN	
	DRIVING PATTEN	
	DRIVING PATTEN	

TEMP TRBLE FACT	ACC TENT TRBLR	Yes / No
	ABNML COM BR–HV	Yes / No
	ILK OPERATION	Yes / No
	FUEL SHORTAGE	Yes / No

ENG INDPDENT RQ	ENG WARM UP RQT	Yes / No
	AIRCON REQUEST	Yes / No
	ENG STP INHIBIT	Yes / No
	HCAC ABSRT RQST	Yes / No
	HV BATT CH RQST	Yes / No
	IDLING REQUEST	Yes / No
	ENG STOP RQST	Yes / No

DC/DC CONV STP	OUTPUT V OVER	Yes / No
	INPUT V LOW	Yes / No
	INPUT V OVER	Yes / No
	OVR HEAT PRTECT	Yes / No
	DC/DC CONV STOP	Yes / No
	DC/DC V UNSTLE	Yes / No
	OUTPUT STOP	Yes / No
	DC/DC STOP FACT	Yes / No

Battery ECU

TROUBLE CODE	
BATTERY SOC	%
WOUT	KW
WIN	KW
DELTA SOC	%
IB MAIN BATTERY	A
BATT TEMP 1	˚F (˚C)
BATT TEMP 2	˚F (˚C)
BATT TEMP 3	˚F (˚C)
BATT TEMP 4	˚F (˚C)
BATT INSIDE AIR	˚F (˚C)
NORMAL STATUS	YES / NO
PRE ONBOARD CH	YES / NO
ONBOARD CHARGE	YES / NO
OFF AVE CHG ST	YES / NO
COOLING FAN LO	ON / OFF
COOLING FAN MID	ON / OFF
COOLING FAN HI	ON / OFF
SBL FAN ST RQST	ON / OFF
AUX. BATT V	V
EQTR CHARGE ST	ON / OFF
EQCO DF RERAY	ON / OFF
CCTL	ON / OFF
BATT BLOCK V1	V
BATT BLOCK V2	V
BATT BLOCK V3	V
BATT BLOCK V4	V
BATT BLOCK V5	V
BATT BLOCK V6	V
BATT BLOCK V7	V
BATT BLOCK V8	V
BATT BLOCK V9	V
BATT BLOCK V10	V
BATT BLOCK V11	V
BATT BLOCK V12	V
BATT BLOCK V13	V
BATT BLOCK V14	V
BATT BLOCK V15	V
BATT BLOCK V16	V
BATT BLOCK V17	V
BATT BLOCK V18	V
BATT BLOCK V19	V

Engine ECU

TROUBLE CODE	
CALC LOAD	%
ENGINE SPD	rpm
COOLANT TEMP	°F (°C)
INTAKE AIR	°F (°C)
VEHICLE SPD	mph (km/h)
SHORT FT #1	%
LOND FT #1	%
FUEL SYS #1	
FUEL SYS #2	
ENG RUN TIME	
BATTERY	V
INJECTOR	ms
INJ VOL FB	
FEL FB COEF	
A/F LEARN	%
PURGE LEARN	%
KCS FEEDBACK	degree
REQ ENQ TORQ	KW
RAM MONITOR	
ENG RUN SIG	ON / OFF
ACC RACING SIG	ON / OFF
ENG WARM UP SIG	ON / OFF
ENG RUN PERM	
FC STATUS	
ENG STP LIMIT	

EMPS ECU

TROUBLE CODE	
TRQ1	V
TRQ2	V
WRR	mph (km/h)
WRL	mph (km/h)
MOTOR ACTUAL	A
COMMAND VALUE	A
STR ANGL VEL	deg/s
THERMISTOR TEMP	°F (°C)
PIG SUPPLY	V
IG SUPPLY	ON / OFF
TRQ1 ZERO VAL	V
TRQ2 ZERO VAL	V

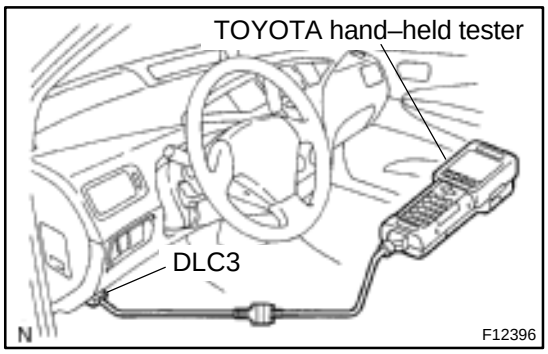

(d) Clear the DTC after completion of repair.
(1) Connect the TOYOTA hand–held tester to the DLC3.
Before clearing, check that DTCs and freeze frame data of the HV ECU and the ECU related to the operation history data are reccorded.
(2) Operate the TOYOTA hand–held tester to erase the DTC (See the hand–held tester operator's manual.).

4. FAIL–SAFE CHART

If any the following codes is recorded, the HV ECU enters the fail safe mode.

DTC code	INF. code	Trouble area	Driving condition
B2799	101	Immobilizeer Malfunction	Impossible to drive
C2692	102	Regenerative Brake Check	–
C2693	103	Regenerative Brake Check	–
P1120	104	Accelerator Pedal Position Sensor Circuit Malfunction	Limited driving
	105		Limited driving
	106		Limited driving
	107		Limited driving
	108		Limited driving
	109		Limited driving
	110		Limited driving
	111		Limited driving
	112		Limited driving
	113		Limited driving (Creep vehicle speed)
	114		Limited driving (Creep vehicle speed)
P1520	115	Stop Light Switch Malfunction	Cruise control driving impossible
P1566	116	Cruise Control System Malfunction	Cruise control driving impossible
P1600	117	BATT Malfunction	Normal driving
P1780	118	Park/Neutral Positiont Switch System Malfunction	Impossible to drive/Normal driving when shift position is fixed
	119		Impossible to drive/Normal driving when shift position is fixed
	120		Impossible to drive
	121		Impossible to drive/Normal driving when shift position is fixed
P3000	123	HV Battery Malfunction	Limited driving
	125		Limited driving
	388		Limited driving
	389		Limited driving
P3001	129	HV Battery ECU Malfunction	Limited driving
P3004	130	Power Cable Malfunction	Limited driving
	131		Impossible to drive
	132		Normal driving
	133		Limited driving

	127		Limited driving
	128		Limited driving
	134		Impossible to drive
	135		Impossible to drive
	136		Normal driving
	137		Normal driving
	138		Limited driving
	139		Normal driving
	140		Impossible to drive
	141		Impossible to drive
	142		Impossible to drive
	143		Impossible to drive
	144		Impossible to drive
	145		Impossible to drive
	147		Impossible to drive
	148		Normal driving
	149		Normal driving
	150		Impossible to drive
	151		Impossible to drive
	152		Impossible to drive
	153		Impossible to drive
	154		Impossible to drive
	155		Impossible to drive
P3100	156	HV ECU Malfunction	Impossible to drive
	157		Impossible to drive
	158		Impossible to drive
	159		Impossible to drive
	160		Impossible to drive
	161		Impossible to drive
	162		Impossible to drive
	163		Impossible to drive
	164		Impossible to drive
	165		Limited driving
	166		Normal driving
	167		Limited driving
	168		Limited driving
	169		Limited driving
	170		Limited driving
	171		Impossible to drive
	172		Impossible to drive
	173		Impossible to drive
	174		Normal driving
	175		Normal driving
	176		Normal driving
	177		Impossible to drive
	178		Impossible to drive

P3100	179	HV ECU Malfunction	Impossible to drive
	180		Impossible to drive
	181		Impossible to drive
	182		Impossible to drive
	183		Impossible to drive
	184		Impossible to drive
	185		Impossible to drive
	186		Impossible to drive
	187		Impossible to drive
	188		Limited driving
	189		Limited driving
	190		Limited driving
	191		Limited driving
	192		Limited driving
	193		Limited driving
	194		Limited driving
	195		Limited driving
	196		Limited driving
	197		Limited driving
	198		Normal driving
	199		Limited driving
	200		Limited driving
	201		Limited driving
	202		Limited driving
	203		Limited driving
	271		Normal driving
	310		Limited driving
	392		Impossible to drive
	393		Impossible to drive
P3101	204	Engine System Malfunction	Limited driving
	205		Limited driving
	238		Limited driving
P3105	206	Battery ECU Communication Circuit Malfunction	Limited driving
	207		Limited driving
	208		Limited driving
P3106	209	ECM Communication Circuit Malfunction	Limited driving
	210		Limited driving
	211		Limited driving
	212		Limited driving
	394		Limited driving
P3107	213	Airbag ECU Communication Circuit Malfunction	Normal driving
	214		Normal driving
	215		Normal driving
P3108	216	A/C Amplifier Communication Circuit Malfunction	Normal driving
	217		Normal driving

P3109	218	Battery ECU Communication Circuit Malfunction	Regenerative brake ineffective
	219		Regenerative brake ineffective
	220		Regenerative brake ineffective
	221		Regenerative brake ineffective
	222		Regenerative brake ineffective
P3110	223	IGCT Relay Malfunction	Normal driving
P3115	224	System Main Relay Malfunction	Normal driving
	225		Normal driving
	226		Impossible to drive
	227		Impossible to drive
	228		Impossible to drive
	229		Impossible to drive
	231		Impossible to drive
	232		Limited driving
	233		Impossible to drive
P3120	234	HV Transaxle Malfunction	Regenerative brake ineffective
	235		Impossible to drive
	236		Normal driving
	237		Limited driving
	239		Limited driving
	240		Impossible to drive
	241		Normal driving
	242		Limited driving
	243		Limited driving
	244		Limited driving
	245		Limited driving
	246		Limited driving
	247		Normal driving
	248		Normal driving
	249		Normal driving
	250		Normal driving
	253		Limited driving
	254		Limited driving
	255		Limited driving
	256		Limited driving
	257		Normal driving
	258		Normal driving
	259		Normal driving
	260		Normal driving

	263		Normal driving
	264		Normal driving
	265		Normal driving
	266		Limited driving
	267		Limited driving
	268		Limited driving
	269		Limited driving
	270		Limited driving
	272		Normal driving
	273		Normal driving
	274		Normal driving
	275		Normal driving
	276		Normal driving
	277		Normal driving
	278		Limited driving
	279		Impossible to drive
	280		Limited driving
	281		Limited driving
	282		Limited driving
	283		Limited driving
	284		Impossible to drive
	285		Limited driving
P3125	286	Converter & Inverter Assembly Malfunction	Limited driving
	287		Limited driving
	288		Limited driving
	289		Limited driving
	290		Limited driving
	291		Limited driving
	292		Limited driving
	293		Limited driving
	294		Limited driving
	295		Limited driving
	296		Limited driving
	297		Limited driving
	298		Limited driving
	299		Limited driving
	300		Limited driving
	301		Limited driving
	302		Limited driving
	303		Limited driving
	304		Limited driving
	305		Limited driving
	306		Limited driving
	307		Limited driving
	308		Impossible to drive

P3125	309	Converter & Inverter Assembly Malfunction	Limited driving
	311		Normal driving
	312		Normal driving
	313		Normal driving
	314		Normal driving
	315		Normal driving
	316		Limited driving
	317		Limited driving
	318		Limited driving
	319		Limited driving
	320		Limited driving
	321		Limited driving
	322		Limited driving
	323		Limited driving
	324		Limited driving
	325		Limited driving
	326		Limited driving
	327		Limited driving
	328		Limited driving
	329		Limited driving
	330		Limited driving
	331		Limited driving
	332		Limited driving
	333		Limited driving
	334		Limited driving
	335		Limited driving
	336		Limited driving
	337		Limited driving
	338		Limited driving
	339		Limited driving
	340		Limited driving
	341		Limited driving
	342		Limited driving
	343		Limited driving
	344		Limited driving
	345		Limited driving
P3130	346	Inverter Cooling System Malfunction	Normal driving
	347		Normal driving
P3135	348	Circuit Breaker Sensor Malfunction	Normal driving
	349		Normal driving
P3140	350	Interlock Malfunction	Normal driving
	351		Normal driving
P3145	352	Vehicle Speed Sensor Circuit Malfunction	Cruise control driving impossible

5. CHECK FOR INTERMITTENT PROBLEMS

(a) Perform a simulation test (See page IN–41).
In the simulation test, reproduce the driving condition at the trouble occurrence according to the customer's comments and freeze frame data recorded with DTC, such as an opening angle of the accelerator pedal, SOC, engine coolant temperature, engine rpm, and MG/1MG2 rpm and torque.

(b) Check the connector and terminal (See page IN–41).

(c) Handle the connector (See page IN–41).

6. TOYOTA HAND–HELD TESTER DISPLAY ITEMS

TOYOTA Hand–held tester display	Measurement Item
1 BEF LATST OR	Number of operation of 1 trip before last
1 BEF LATST TRP	Number of trips before last
2 BEF LATST OR	Number of operation 2 trips before last
2 BEF LATST TRP	Number of trips 2 before last
ABNML CON BR–HV	Communication malfunction between HV ECU and brake
ACC SENSOR MAIN	Main accelerator sensor
ACC SENSOR SUB	Sub accelerator sensor
ACC TENT TRBLE	Tentative trouble of accelerator
ACC THROTTLE	Accelerator throttle
ACCEL MODE	History of acceleration and reduction
AIR CON REQUEST	Air conditioner request
AUX. BATT LOW	Auxiliary battery becomes week
AUX. BATT V	Voltage of auxiliary battery
BATT HIGH TEMP	Temperature of the battery is too high
BATT HIGH VOLT	Voltage of the battery is too high
BATT LOW BOLT	Voltage of the battery is low
BATT OVER LOAD	Battery is overloaded
BATT SAVE RQST	Request to save the main battery
BATTERY FULL	Battery full
BRAKE TORQ	Brake torque
CELL TEMP–MAX	Highest temperature of all battery cells
CELL TEMP–MIN	Lowest temperature of all battery cells
CHG RESTRICTION	Charge restriction
COOLANT TEMP	Water temperature
CRUISE CONTROL	Condition of the cruise control
DC/DC CONV STOP	DC/DC converter stop signal
DC/DC CONV STOP	Factors causing DC/DC converter to stop
DC/DC STOP FACT	DC/DC converter has stopped at least once
DC/DC V UNSET	DC/DC voltage is unsettled
DCHG RQST SOC	Discharge request to adjust SOC
DISCHAG INHIBIT	Battery is inhibited to discharge

DRIVE CONDITION	0: When engine is stopped
	1: When stopping engine
	2: When starting engine
	3: When cranking engine or engine is operating
	4: While generating power or load driving
	5: –
	6: While racing engine in P position
DRIVING PATTEN1	History of driving pattern 1
DRIVING PATTEN2	History of driving pattern 2
DRIVING PATTEN3	History of driving pattern 3
DRIVING PATTERN	HIstory of driving
ECU TYPE	ECU type
ENG INDPDET RQ	Factors causing engine to run independently
ENG STOP RQST	Engine stop request
ENG STP INHIBIT	Engine stop inhibition
ENG WARM UP RQT	Engine warming up request
ENGINE FUEL CUT	Engine fuel cut
ENGINE SPD	Engine speed
EXCLUSIVE INFO1	Exclusive information 1
EXCLUSIVE INFO2	Exclusive information 2
EXCLUSIVE INFO3	Exclusive information 3
EXCLUSIVE INFO4	Exclusive information 4
EXCLUSIVE INFO5	Exclusive information 5
EXCLUSIVE INFO6	Exclusive information 6
FUEL SHORTAGE	Low fuel
HCAC ABSRT RQST	HCAC OBD request
HV BATT CH RQST	Request from HV ECU to charge the battery
HV ECU INTERMITTENT	HV ECU intermittent problems
IDLING REQUEST	Engine idling request
IG OFF IN DRVIN	Turning IG OFF while driving the car
IG OFF TIME	IG OFF time
ILK OPERATION	Interlock operation
INFORMATION 1–5	Information code
INPUT V LOW	Input voltage is too low
INPUT V OVER	Input voltage is too high
INTAKE AIR	Intake air temperature
INVERT TEMP–MG1	Temperature of inverter MG1
INVERT TEMP–MG2	Temperature of inverter MG2
LATEST OPER	Latest number of operation
LATEST TRIP	Latest number of trips (IG ON–OFF)
LOAD CONDITION	Indicating which of MG1 or MG2 the vehicle uses more
MAIN BATT LOW	SOC of main battery becomes low
MCYL CTRL POWER	Torque for controlling oil pressure of master cylinder
MG1 TEMP HIGH	Temperature MG1 is too high
MG2 TEMP HIGH	Temperature MG2 is too high
MG1 CURRENT V	Electric current of MG1 V phase

MG1 CURRENT W	Electric current of MG1 W phase
MG1 INV TEMP HI	Temperature of inverter MG1 is high
MG1 REV	MG1 revolution
MG1 TEMP	Motor temperature of MG1
MG1 TEMP HIGH	Temperature fo MG1 is too high
MG2 TEMP HIGH	Temperature fo MG2 is too high
MG1 CURRENT V	Electric cuurent of MG1 is V phase
MG1 CURRENT W	Electric cuurent of MG1 is W phase
MG1 INV TEMP HI	Temperature of inverter MG1 is higt
MG1 REV	MG1 revolution
MG1 TEMP	Motor temperature of MG1
MG1 TEMP HIGH	Temperature of MG1 is high
MG1 TORQ	MG1 torque
MG2 CURRENT V	Electric cuurent of MG2 is V phase
MG2 CURRENT W	Electric cuurent of MG2 is W phase
MG2 INV TEMP HI	Temperature of inverter MG2 is higt
MG2 REV	MG2 revolution
MG2 TEMP	Motor temperature of MG2
MG2 TEMP HIGH	Temperature of MG2 is high
MG2 TORQ	MG2 torque
N RANGE OVR TIME	Leaving shift gear into N position over a period of time
N RANGE CTRL1	N position control due to incomplete shift gears
N RANGE CTRL2	N position control due to rapid shift gear (D–R)
OCCURRENCE ORDR	Order in which the trouble occurs
OCCURRNCE TRIP	Number of trips when this error occurred
OUTPUT STOP	Output stop
OUTPUT V OVER	Output voltage is too high
OVER CURRENT	Electric current of the batytery is too high
OVER VOLTAGE	Voltage of the battery is too high
OVR HEAT PRTECT	Overheat protection
POWER RQST	Power output requested by HV ECU
PWR RESOURCE IB	Power resource IB
PWR RESOURCE VM	power resource VM
RAPID SPD CHANG	Vehicle speed is changed too rapidly
REGEN EXEC TORQ	Torque volue of regenerative brake
REGEN IH FACTOR	Inhibiting factor of regeneration
REGEN RQST TORQ	Torque valueof regenerative brake requested by HV ECU
REGN BRK INEFCT	Regenerative brake is ineffective
RESIST OVR HEAT	Restriction resist is overheating
SG B IN REDUCIN	Shifting gear into ”B” in reducing the speed
SG N IN REDUC/P	Shifting gear into ”N” reducing the speed
SHIFT BEF READY	Shifting gear before ”READY” light turns on
SHIFT POSITION	Shift position
SHIFT SENSOR1	Shift sensor 1
SHIFT SENSOR2	Shift sensor 2
SOC	Stated of charge

STEP ACC&BRAKE	Stepping both accelerator & brake at the same time
STEPP ACC IN N	Stepping accelerator in N position
STOP SW COND	Condition of stop switch
STP CIRCIT OPEN	STP circuit short
STP IN CIR MLF	STP circuit malfunciton
TACHO METER	Engine rpm
TARGET ENG SPD	Target engine speed
TEMP TRBLE FACT	Factors causing temporay trouble
VEHICLE SPD	Vehicle speed
WIN CTRL POWER	Power value of charge control
WOUT CTRL POWER	Power value of discharge control

DI82L–02

DIAGNOSTIC TROUBLE CODE CHART

HINT:

Parameters listed in the chart may not be exactly the same as your reading due to the type of instrument or other factors.

If a malfunction code is displayed during the DTC check in the check mode, check the circuit for that code listed in the table below. For the details of each code, turn to the page referred to under the ''See page'' for the respective ''DTC No.'' in the DTC chart.

DTC No. (See page)	Detection Item	Trouble Area	Hybrid System Warning Light*	Memory
B2799 (DI–210)	Immobilizer Malfunction	• Wire Harness • Immobilizer System	○	○
C2692 (DI–212)	Regenerative Brake Check	–	○	○
C2693 (DI–212)	Regenerative Brake Check	–	X	○
P1120 (DI–213)	Accelerator Pedal Position Sensor Circuit Malfunction	• Accelerator Pedal Position Sensor • Wire Harness	○	○
P1520 (DI–215)	Stop Light Switch (Cruise Control System) Malfunction	• Stop Light Switch • Wire Harness • Brake ECU	X	○
P1566 (DI–217)	Cruise Control System Malfunction	• Stop Light Switch • Brake ECU • Wire Harness	X	○
P1600 (DI–219)	BATT Malfunction	• HV Fuse • Wire Harness	○	○
P1780 (DI–221)	Park/Neutral Position Switch System Malfunction	• Park/Neutral Position Switch • Wire Harness	○	○
P3000 (DI–223)	HV Battery Malfunction	• HV Battery System • High Voltage Fuse • Power Cable • HV Battery Cooling System	○/X	○
P3001 (DI–224)	HV Battery ECU Malfunction	• Battery ECU	○	○
P3004 (DI–225)	Power Cable Malfunction	• Power Cable • HV Battery System • Service Plug • System Main Relay • Converter & Inverter Assembly	○/X	○
P3100 (DI–229)	HV ECU Malfunction	• Wire Harness • HV ECU • ECM • Crankshaft Position Sensor • Camshaft Position Sensor • Ignition Switch	○	○
P3101 (DI–237)	Engine System Malfunction	• Engine • HV Transaxle	○	○
P3105 (DI–238)	Battery ECU Communication Circuit Malfunction	• Wire Harness • Battery ECU	○	○
P3106 (DI–240)	ECM Communication Circuit Malfunction	• Wire Harness • ECM	○/X	○

P3107 (DI–242)	Airbag ECU Communication Circuit Malfunction	• Wire Harness • Airbag Sensor Assembly	○	○
P3108 (DI–244)	A/C Amplifier Communication Circuit Malfunction	• Wire Harness • A/C Amplifier	X	○
P3109 (DI–245)	Brake ECU Communication Circuit Malfunction	• Wire Harness • Brake ECU	○	○
P3110 (DI–247)	IGCT Relay Malfunction	• Wire Harness • IGCT Relay	○	○
P3115 (DI–249)	System Main Relay Malfunction	• Wire Harness • System Main Relay • HV ECU	○	○
P3120 (DI–252)	HV Transaxle Malfunction	• HV Transaxle • Wire Harness • System Main Relay	○	○
P3125 (DI–266)	Converter & Inverter Assembly Malfunction	• Converter & Inverter Assembly • Wire Harness	○	○
P3130 (DI–302)	Inverter Cooling System Malfunction	• Inverter Water Pump • Wire Harness • IG2 Relay • Electric Cooling Fan System	○	○
P3135 (DI–305)	Circuit Breaker Sensor Malfunction	• Circuit Breaker Sensor • Wire Harness	○	○
P3140 (DI–307)	Interlock Malfunction	• Interlock Switch • Inverter Terminal Cover • Converter & Inverter Assembly • Wire Harness	○	○
P3145 (DI–310)	Vehicle Speed Sensor Circuit Malfunction	• Wire Harness	X	○

*: ○: Hybrid system warning light lights up. X: Hybrid system warning light does not light up.

INFORMATION CODE (TOYOTA Hand–held tester only)

DTC NO.	INF. Code	Detection Item	Detecting Condition
B2799	101	Immobilizer Malfunction	No input of signal from transponder key ECU
C2692	102	Regenerative Brake Check	Regenerative brake check
C2693	103	Regenerative Brake Check	Regenerative brake check
P1120	104	Accelerator Pedal Position Sensor Circuit Malfunction	Open or short in main accelerator sensor circuit
	105		+B short in main accelerator sensor circuit
	106		Main sensor internal error
	107		Open or short in sub accelerator sensor circuit
	108		+B short in sub accelerator sensor circuit
	109		Sub sensor internal error
	110		When difference between main sensor value and sub sensor value is large
	111		When sub sensor value changes while main sensor value does not
	112		When main sensor value changes while sub sensor value does not
	113		When any of the information code 104 – 112 continues to appear
	114		Accelerator pedal not smoothly returning to original position
P1520	115	Stop Light Switch (Cruise Control System) Malfunction	Open or short in stop light switch circuit
P1566	116	Cruise Control System Malfunction	When STP signal of HV ECU is inconsistent with that of brake ECU, with cruise control indicator ON
P1600	117	BATT Malfunction	HV ECU back–up power source circuit malfunction
P1780	118	Park/Neutral Position Switch System Malfunction	When more than 2 main signals are ON
	119		When main signal is not turned ON even though sub signal has been input
	120		Open or short in sub sensor circuit
	121		When shift position detected by main signal is different from that detected by sub signal
P3000	123	HV Battery Malfunction	Input of abnormal signal from battery ECU (HV battery system malfunction)
	125		Input of abnormal signal from battery ECU (high voltage fuse blown out)
	388	Discharge Inhibition Control Malfunction	When charged battery is low due to leaving the vehicle in N position, gas shortage or HV system malfunction
	389	Drop of High Voltage	When main battery is dead or main battery is dead due to HV system malfunction
P3001	129	HV Battery ECU Malfunction	Battery ECU malfunction
P3004	130	HV Battery Malfunction	When HV battery voltage becomes lower than inverter voltage
	131	Power Cable Malfunction	When main fuse is blown out, service plug is disconnected or limiter resistance is cut off
	132		When inverter voltage sensor is malfunctioning or limiter resistance value increases
	133	HV Battery Malfunction	Input of abnormal signal from battery ECU
P3100	134	HV ECU Internal Error	HV ECU Internal Error
	135		HV ECU Internal Error
	136	GO Signal Error	Open or short in GO signal circuit
	137	Engine Speed Sensor Malfunction	Engine speed sensor malfunction

DTC NO.	INF. Code	Detection Item	Detecting Condition
P3100	127	IB Circuit Malfunction	+B short in IB terminal circuit of HV ECU
	128		Open or short in IB terminal circuit of HV ECU
	138		When the difference between battery current of HV ECU and current of battery is large
	139	IG Signal Circuit Malfunction	HV ECU internal error
	140	RAM Braked	HV ECU internal error
	141	ROM Braked	HV ECU internal error
	142	ST Signal Circuit Malfunction	When ST signal of HV ECU is ON, with ignition switch turned OFF
	143	Immobilizer Malfunction	HV ECU internal error
	144	Primary Check Malfunction	HV ECU internal error
	145		HV ECU internal error
	146		HV ECU internal error
	147		HV ECU internal error
	391	Motor CPU Malfunction	HV ECU internal error
	392		HV ECU internal error
	393	HV CPU Operation Malfunction	HV ECU internal error
	148	HV CPU Malfunction	HV ECU internal error
	149		HV ECU internal error
	150	Motor CPU Malfunction	HV ECU internal error
	151		HV ECU internal error
	152		HV ECU internal error
	153		HV ECU internal error
	154		HV ECU internal error
	155		HV ECU internal error
	156		HV ECU internal error
	157	Motor CPU Malfunction	HV ECU internal error
	158		HV ECU internal error
	159	Motor ECU Communication Circuit Malfunction	HV ECU internal error
	160		HV ECU internal error
	161	Motor ECU Power Source Malfunction	HV ECU internal error
	162		HV ECU internal error
	163		HV ECU internal error
	164		HV ECU internal error
	165		HV ECU internal error
	271	Motor PWN Line Connection Malfunction	HV ECU internal error
	166	Motor R/D Malfunction	HV ECU internal error
	167		HV ECU internal error
	168		HV ECU internal error
	169		HV ECU internal error
	170		HV ECU internal error

DTC NO.	INF. Code	Detection Item	Detecting Condition
P3100	171	Motor REF Signal Malfunction	HV ECU internal error
	172		HV ECU internal error
	173		HV ECU internal error
	174	Motor Inverter Current Sensor Malfunction	HV ECU internal error
	175		HV ECU internal error
	176	Motor Gate Shutdown Signal Line Connection Malfunction	HV ECU internal error
	177	Motor Main CPU Malfunction	HV ECU internal error
	178		HV ECU internal error
	179		HV ECU internal error
	180	Rotation Angle Check CPU Malfunction	HV ECU internal error
	181		HV ECU internal error
	182		HV ECU internal error
	183		HV ECU internal error
	184		HV ECU internal error
	185		HV ECU internal error
	186		HV ECU internal error
	187	Important RAM Malfunction	HV ECU internal error
	188	Generator CPU Malfunction	HV ECU internal error
	189		HV ECU internal error
	190		HV ECU internal error
	191		HV ECU internal error
	192		HV ECU internal error
	193		HV ECU internal error
	194		HV ECU internal error
	195		HV ECU internal error
	196		HV ECU internal error
	310	Generator PWN Line Connection Malfunction	HV ECU internal error
	197	Generator R/D Malfunction	HV ECU internal error
	198		HV ECU internal error
	199		HV ECU internal error
	200		HV ECU internal error
	201		HV ECU internal error
	202		HV ECU internal error
	203	Generator Shutdown Signal Line Connection Malfunction	HV ECU internal error
	390	Charge Inhibition Control Malfunction	HV ECU internal error
P3101	204	Engine System Malfunction	Input of abnormal signal from the ECM (abnormal engine output)
	205		Input of abnormal signal from the ECM (engine unable to start)
	238	Transaxle Malfunction	When engine does not start even though cranking it
P3105	206	Battery ECU Communication Circuit Malfunction	When communication between battery ECU and HV ECU is abnormal 1 sec. after ignition is turned ON
	207		
	208		

DTC NO.	INF. Code	Detection Item	Detecting Condition
P3106	209	ECM Communication Circuit Malfunction	When communication between ECM and HV ECU is abnormal 1 sec. after ignition is turned ON
	210		
	211		
	212		Input of abnormal signal from ECM
	394		When ECM does not operate
P3107	213	Airbag ECU Communication Circuit Malfunction	When communication between airbag ECU and HV ECU is abnormal 10 sec. after ignition is turned ON
	214		
	215		
P3108	216	A/C Amplifier Communication Circuit Malfunction	When communication from A/C amplifier to HV ECU is abnormal
	217		
P3109	218	Brake ECU Communication Circuit Malfunction	When communication between brake ECU and HV ECU is abnormal 1.5 sec. after ignition is turned ON
	219		
	220		
	221		
	222		When abnormal data is received from brake ECU
P3110	223	IGCT Relay	When IGCT relay is always closed
P3115	224	SMR Cont1 Malfunction	Open or +B short in system main relay No. 1 circuit
	225		Short in system main relay No. 1 circuit
	226	SMR Cont2 Malfunction	Open or +B short in system main relay No. 2 circuit
	227		Short in system main relay No. 2 circuit
	228	SMR Cont3 Malfunction	Open or +B short in system main relay No. 3 circuit
	229		Short in system main relay No. 3 circuit
	231	Deposit of SMR	System main relay + terminal deposited
	232		System main relay – terminal deposited
	233		System main relay + & – terminal deposited
P3120	234	Energy Balance Malfunction	Small reduction of motor magnetism
	235		Large reduction of motor magnetism
	236		Small reduction of generator magnetism
	237		Large reduction of generator magnetism
	239	HV Transaxle Malfunction	Shaft damaged
	240		Generator locked
	241		Torque limiter sliding
	242		Planetary gear locked
	243	Motor Resolver Malfunction	Motor resolver inter–phase short
	244		Motor resolver inter–phase short (When there is a history that the state of malfunction continued during inverter fail safe mode)
	245		Open or short in motor resolver circuit
	246		Open or short in motor resolver circuit (When there is a history that the state of malfunction continued during inverter fail safe mode)

DTC NO.	INF. Code	Detection Item	Detecting Condition
P3120	247	Motor Temperature Sensor Malfunction	GND short in motor temperature sensor
	248		Motor temperature sensor malfunction
	249		Open or +B short in motor temperature sensor
	250		Motor temperature sensor performance problem
	253	Generator Resolver Malfunction	Generator resolver inter–phase short
	254		Generator resolver inter–phase short (When there is a history that the state of malfunction continued during inverter fail safe mode)
	255		Open or short in generator resolver circuit
	256		Open or short in generator resolver circuit (When there is a history that the state of malfunction continued during inverter fail safe mode)
	257	Generator Temperature Sensor Malfunction	GND short in generator temperature sensor
	258		Generator temperature sensor malfunction
	259		Open or +B short in generator temperature sensor
	260		Generator temperature sensor performance problem
P3125	263	DCDC Converter Malfunction	+B short in DCDC converter NODD wiring
	264		DCDC converter malfunction
	265		Open or GND short in DCDC converter NODD wiring
	266	VM Malfunction	Open or GND short in inverter voltage signal circuit
	267		+B short in inverter voltage signal circuit
	268		Inverter voltage signal is inconsistent with battery voltage
	269		Inverter voltage sensor malfunction
	270		Abnormality of line connection of inverter voltage signal circuit (When there is a history that the state of malfunction continued during inverter fail safe mode)
	272	Motor PWN Line Connection Malfunction	Abnormality of line connection of motor PWM (When there is a history that the state of malfunction continued during inverter fail safe mode)
	273	Motor Inverter Gate Malfunction	Motor inverter malfunction
	274	Motor Inverter Temperature	Open or +B short in motor inverter temperature sensor
	275		GND short in motor inverter temperature sensor
	276	Sensor Malfunction	Motor inverter temperature sensor malfunction
	277		Motor inverter temperature sensor performance problem
	278	Motor Inverter Sinv	+B short in motor inverter stop signal circuit
	279		Over voltage of inverter
	280		Open or GND short in motor inverter stop signal circuit
	281		Voltage drop of inverter power source
	282		Inverter circuit broken
	283	Motor Inverter Finv	+B short in motor inverter fail signal circuit
	284		Inverter overheating
	285		Open or GND short in motor inverter fail signal circuit
	286		Inverter circuit broken
	287		Inverter internal short

DTC NO.	INF. Code	Detection Item	Detecting Condition
P3125	288	Motor Inverter Current Sensor Malfunction	Motor inverter current sensor malfunction (V phase sub sensor)
	289		Open in motor inverter current sensor (V phase sub sensor)
	290		Motor inverter current sensor malfunction (V phase main sensor)
	291		(when there is a history that the state of malfunction continued during inverter fail safe mode)
	292		Open in motor inverter current sensor (V phase main sensor)
	293		(when there is a history that the state of malfunction continued during inverter fail safe mode)
	294		Motor inverter current sensor V phase performance problem
	295		(when there is a history that the state of malfunction continued during inverter fail safe mode)
	296		Motor inverter current sensor malfunction (W phase sub sensor)
	297		Open in motor inverter current sensor (W phase sub sensor)
	298		Motor inverter current sensor malfunction (W phase main sensor)
	299		(when there is a history that the state of malfunction continued during inverter fail safe mode)
	300		Open in motor inverter current sensor (W phase main sensor)
	301		(when there is a history that the state of malfunction continued during inverter fail safe mode)
	302	Motor Inverter Current Sensor Malfunction	Motor inverter current sensor W phase performance problem
	303		(when there is a history that the state of malfunction continued during inverter fail safe mode)
	304	Motor Gate Shutdown Signal Line Connection Malfunction	+B short in motor gate shutdown signal circuit
	305		Open or GND short in motor gate shutdown signal circuit
	306	Failure in Monitoring Motor Torque Performance	Failure in monitoring motor torque performance
	307	Abnormal Current Value of Motor	Abnormal current value of motor
	308	Detection of Collision Signal	Input of collision signal from airbag or inverter
	309	Motor PWM Line Connection Malfunction	Open or short in generator inverter switching wiring (GUU, GVU, GWU)
	311	Generator Inverter Malfunction	Generator inverter malfunction
	312	Generator Inverter Temperature Sensor Malfunction	Open or +B short in generator inverter temperature sensor
	313		GND short in generator inverter temperature sensor
	314		Generator inverter temperature sensor malfunction
	315		Generator inverter temperature sensor performance problem
	316	Generator Inverter Sinv	+B short in generator inverter stop signal circuit
	317		Over voltage of inverter
	318		Open or GND short in generation inverter stop signal circuit
	319		Voltage drop of inverter power source
	320		Inverter circuit broken
	321	Generator Inverter Finv	+B short in generator inverter fail signal circuit
	322		Inverter overheating
	323		Open or GND short in generator inverter fail signal circuit
	324		Inverter circuit broken
	325		Inverter internal short

DTC NO.	INF. Code	Detection Item	Detecting Condition
P3125	326	Generator Inverter Current Sensor Malfunction	Generator inverter current sensor malfunction (V phase sub sensor)
	327		Open in generator inverter current sensor (V phase sub sensor)
	328		Generator inverter current sensor malfunction (V phase main sensor)
	329		(when there is a history that the state of malfunction continued during inverter fail safe mode)
	330		Open in generator inverter current sensor (V phase main sensor)
	331		(when there is a history that the state of malfunction continued during inverter fail safe mode)
	332		Generator inverter current sensor V phase performance problem
	333		(when there is a history that the state of malfunction continued during inverter fail safe mode)
	334		Generator inverter current sensor malfunction (W phase sub sensor)
	335		Open in generator inverter current sensor (W phase sub sensor)
	336		Generator inverter current sensor malfunction (W phase main sensor)
	337		(when there is a history that the state of malfunction continued during inverter fail safe mode)
	338		Open in generator inverter current sensor (W phase main sensor)
	339		(when there is a history that the state of malfunction continued during inverter fail safe mode)
	340		Generator inverter current sensor W phase performance problem
	341		(when there is a history that the state of malfunction continued during inverter fail safe mode)
	342	Motor Gate Shutdown Signal Line Connection	+B short in generator gate shutdown signal circuit
	343		Open or GND short in generator gate shutdown signal circuit
	344	Failure in Monitoring Generator Torque Performance	Failure in monitoring generator torque performance
	345	Abnormal Current Value of Generator	Abnormal current value of generator
P3130	346	Inverter Cooling System Malfunction	Water pump system malfunction
	347		Electric cooling fan system malfunction
P3135	348	Circuit Breaker Sensor Malfunction	GND short in circuit breaker sensor
	349		Open or +B short in circuit breaker sensor
P3140	350	Interlock Malfunction	Safety devices operating with vehicle is stopped (ILK signal ON)
	351		Open circuit in interlock signal circuit while vehicle is running
P3145	352	Vehicle Speed Sensor Circuit Malfunction	No input of vehicle speed signal during cruise control driving

DI82N–02

TERMINALS OF ECU

HV ECU Terminals

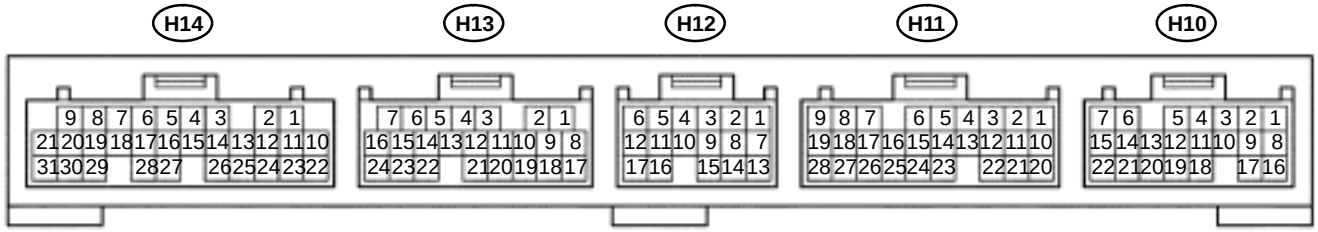

A02508 A04997

Symbols (Terminals No.)	Wiring Color	Condition	STD Voltage (V)
BATT (H14–3) ↔ GND1 (H14–31)	G–Y ↔ W–B	Always	9 – 14
+B1 (H14–4) ↔ GND1 (H14–31)	W–G ↔ W–B	Ignition switch ON and ”READY” light ON	9 – 14
+B2 (H14–5) ↔ GND1 (H14–31)	W–G ↔ W–B	Ignition switch ON and ”READY” light ON	9 – 14
IGSW (H13–7) ↔ GND1 (H14–31)	B–W ↔ W–B	Ignition switch ON	9 – 14
ST2 (H13–6) ↔ GND1 (H14–31)	R–W ↔ W–B	Ignition switch ST	9 – 14
ST1 (H14–2) ↔ GND1 (H14–31)	B–Y ↔ W–B	Brake pedal is depressed	Below 0.5
		Brake pedal is released	9 – 14
STP (H14–1) ↔ GND1 (H14–31)	G–W ↔ W–B	Brake pedal is depressed	9 – 14
		Brake pedal is released	Below 0.5
VCP1 (H14–13) ↔ GND1 (H14–31)	Y ↔ W–B	Ignition switch ON	Approx. 5
VPA1 (H14–14) ↔ GND1 (H14–31)	G ↔ W–B	Ignition switch ON and accelerator pedal is released	Approx. 1
		Ignition switch ON and accelerator pedal is fully depressed	Approx. 4
EP1 (H14–12) ↔ GND1 (H14–31)	L ↔ W–B	Ignition switch ON	Below 0.5
VCP2 (H14–23) ↔ GND1 (H14–31)	B ↔ W–B	Ignition switch ON	Approx. 5
VPA2 (H14–15) ↔ GND1 (H14–31)	W ↔ W–B	Ignition switch ON and accelerator pedal is released	Approx. 1
		Ignition switch ON and accelerator pedal is fully depressed	Approx. 4
EP2 (H14–22) ↔ GND1 (H14–31)	R ↔ W–B	Ignition switch ON	Below 0.5
P (H13–15) ↔ GND1 (H14–31)	L–R ↔ W–B	Shift lever is P position	Below 1
		Except shift lever is P position	4 or more
R (H13–14) ↔ GND1 (H14–31)	R–B ↔ W–B	Shift lever is R position	Below 1
		Except shift lever is R position	4 or more
N (H13–13) ↔ GND1 (H14–31)	L–W ↔ W–B	Shift lever is N position	Below 1
		Except shift lever is N position	4 or more
D (H13–23) ↔ GND1 (H14–31)	L–B ↔ W–B	Shift lever is D position	Below 1
		Except shift lever is D position	4 or more
B (H13–22) ↔ GND1 (H14–31)	LG–R ↔ W–B	Shift lever is B position	Below 1
		Except shift lever is B position	4 or more

SFT (H13–11) ↔ GSFT (H13–21)	B–R	Shift lever is P position	Approx. 0.5
		Shift lever is R position	Approx. 2.8
		Shift lever is N position	Approx. 3.4
		Shift lever is D position	Approx. 4.0
		Shift lever is B position	Approx. 4.5
VSFT (H13–12) ↔ GSFT (H13–21)	W–R	Ignition switch ON	4 or more
SPDI (H12–8) ↔ GND1 (H14–31)	V–W ↔ W–B	Ignition switch ON and rotor driving wheel slowly	Pulse generation
ESTP (H14–8) ↔ GND1 (H14–31)	R–Y ↔ W–B	Engine stop is not required	9 – 14
		Engine stop is required	Below 1
SPDO (H14–6) ↔ GND1 (H14–31)	O ↔ W–B	Ignition switch ON and rotor driving wheel slowly	Pulse generation
NODD (H12–4) ↔ GND1 (H14–31)	L–O ↔ W–B	When converter is in normal operation	5 – 7
		When converter is improper	2 – 4
		When converter is required to stop	0.1 – 0.5
ILK (H13–4) ↔ GND1 (H14–31)	O ↔ W–B	Ignition switch ON and interlock switch ON	Below 1
		Ignition switch ON and interlock switch OFF	4 or more
AS1G (H12–14) ↔ AS1 (H12–15)	BR–B ↔ G–R	Ignition switch ON	2.5 – 2.9
IB (H14–25) ↔ GB (H14–26)	B–L ↔ R–W	Ignition switch OFF	Below 1
		Ignition switch from ON to ST (”READY” light ON)	0.5 – 4.5
ABFS (H13–3) ↔ GND1 (H14–31)	L ↔ W–B	Ignition switch ON and ”READY” light ON	2.7 – 3.2
MREL (H12–7) ↔ GND1 (H14–31)	O ↔ W–B	Ignition switch ON	9 – 14

Communication Line

Symbols (Terminals No.)	Wiring Color	Connecting Part or Symbol (Terminal No.)
GSNG (H10–11)	G	MG1, GSNG (M2–7)
GSN (H10–4)	R	MG1, GSN (M2–2)
GRF (H10–10)	B	MG1, GRF (M2–1)
GRFG (H10–17)	W	MG1, GRFG (M2–6)
GCS (H10–5)	Y	MG1, GCS (M2–3)
GCSG (H10–12)	BR	MG1, GCSG (M2–8)
GMTG (H10–8)	G–W	MG1, GMTG (M2–9)
GMT (H10–1)	B–R	MG1, GMT (M2–4)
MSNG (H10–20)	G	MG2, MSNG (M3–5)
MSN (H10–13)	R	MG2, MSN (M3–2)
MRF (H10–19)	P	MG2, MRF (M3–1)
MRFG (H10–18)	L	MG2, MRFG (M3–4)
MCS (H10–14)	B	MG2, MCS (M3–3)
MCSG (H10–21)	W	MG2, MCSG (M3–6)
MMTG (H10–9)	R–W	MG2, MMTG (M4–3)
MMT (H10–2)	GR	MG2, MMT (M3–1)
MSIV (H11–21)	G	Inverter, M–SINV (I10–7)
MSDN (H11–13)	Y	Inverter, M–SDOWN (I9–4)
MIT (H11–11)	L	Inverter, M–INVT (I9–5)

MWU (H11–6)	G	Inverter, M–WU (I9–3)
MUU (H11–4)	R	Inverter, M–UU (I9–1)
MVU (H11–5)	W	Inverter, M–VU (I9–2)
MIVG (H11–26)	B	Inverter, M–GINV (I9–6)
MIVA (H11–16)	B	Inverter, M–IVA (I10–1)
MIVB (H11–7)	W	Inverter, M–IVB (I10–3)
MIWB (H11–17)	G	Inverter, M–IWB (I10–4)
VB (H11–20)	Y	Inverter, VB (I10–5)
MIWA (H11–25)	R	Inverter, M–IWA (I10–2)
GIVA (H11–19)	B	Inverter, G–IVA (I12–1)
GIVB (H11–8)	W	Inverter, G–IVB (I12–3)
GIWB (H11–18)	G	Inverter, G–IWB (I12–4)
GIWA (H11–28)	R	Inverter, G–IWA (I12–2)
GSDN (H11–12)	Y	Inverter, G–SDOWN (I11–4)
GIT (H11–23)	L	Inverter, G–INVT (I11–5)
GWU (H11–3)	G	Inverter, G–WU (I11–3)
GVU (H11–2)	W	Inverter, G–VU (I11–2)
GUU (H11–1)	R	Inverter, G–UU (I11–1)
GIVG (H11–27)	B	Inverter, G–GINV (I11–6)
MFIV (H11–14)	B	Inverter, M–FINV (I10–8)
GSIV (H11–15)	G	Inverter, G–SINV (I12–7)
GFIV (H11–24)	B	Inverter, G–FINV (I12–8)
ETH+ (H14–28)	P	Engine ECU, ETH+ (E9–28)
ETH– (H14–27)	L	Engine ECU, ETH– (E9–27)
HTE+ (H14–19)	Y	Engine ECU, H TE+ (E9–19)
HTE– (H14–29)	BR	Engine ECU, H TE– (E9–18)
HTB+ (H14–20)	LG	Brake ECU, HVI+ (B10–24)
HTB– (H14–30)	V	Brake ECU, HVI– (B10–16)
BTH+ (H14–18)	G	Brake ECU, HVO+ (B10–14)
BTH– (H14–17)	R	Brake ECU, HVO– (B10–22)
FCVC (H14–7)	B–W	Transponder Key ECU, HEVC (T4–8)
CON1 (H12–13)	V	System Main Relay (S8–3)
CON2 (H12–2)	GR	System Main Relay (S8–4)
CON3 (H13–1)	P	System Main Relay (S8–5)
HTD+ (H13–2)	W	Battery ECU, HTD+ (B17–6)
HTD– (H13–20)	B	Battery ECU, HTD– (B17–7)
DTD+ (H13–19)	R	Battery ECU, DTD+ (B17–18)
DTD– (H13–18)	G	Battery ECU, DTD– (B17–19)

DI82O–02

CIRCUIT INSPECTION

DTC	B2799	Immobilizer Malfunction

CIRCUIT DESCRIPTION

The HV ECU checks the condition of the communication from the transponder key ECU.

DTC B2799 – Information code 101

INF. code.	Detecting Condition	Trouble Area
101	No input of signal from transponder key ECU	• Wire harness • Immobilizer system

WIRING DIAGRAM

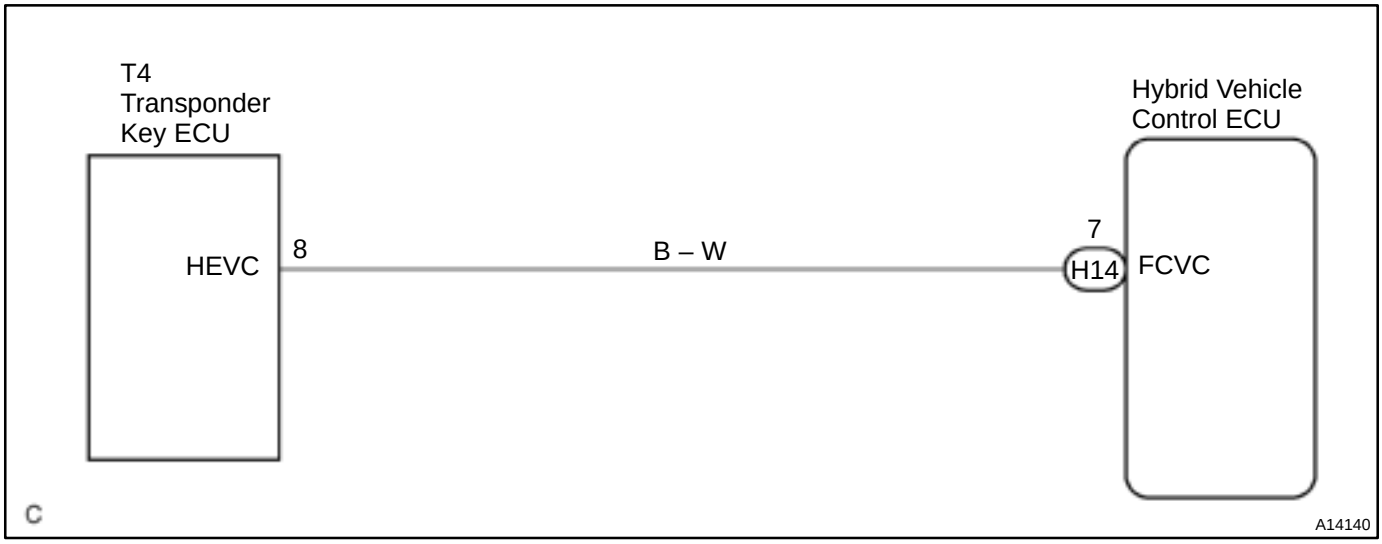

INSPECTION PROCEDURE

1	**Check for open and short in wire harness between HV ECU FCVC terminal and transponder key ECU HEVC terminal (See page IN–41).**

NG → **Repair or replace wire harness.**

OK

Check and repair immobilizer system (See page BE–104).

DI82Q–02

DTC	P1120	Accelerator Pedal Position Sensor Circuit Malfunction

CIRCUIT DESCRIPTION

The accelerator pedal position sensor mounted on the accelerator pedal has main and sub sensors and detects the accelerator pedal position and the malfunction of the accelerator position sensor itself.
HINT:

- When using an OBD¿ scan tool other than TOYOTA hand–held tester, check all the steps.
- When using TOYOTA hand–held tester, confirm the information code and check it.

DTC P1120 – Information code 104, 105, 107, 108

INF. code.	Detecting Condition	Trouble Area
104	Open or short in main accelerator sensor circuit	• Accelerator pedal position sensor • Wire harness
105	+B short in main accelerator sensor circuit	
107	Open or short in sub accelerator sensor circuit	
108	+B short in sub accelerator sensor circuit	

WIRING DIAGRAM

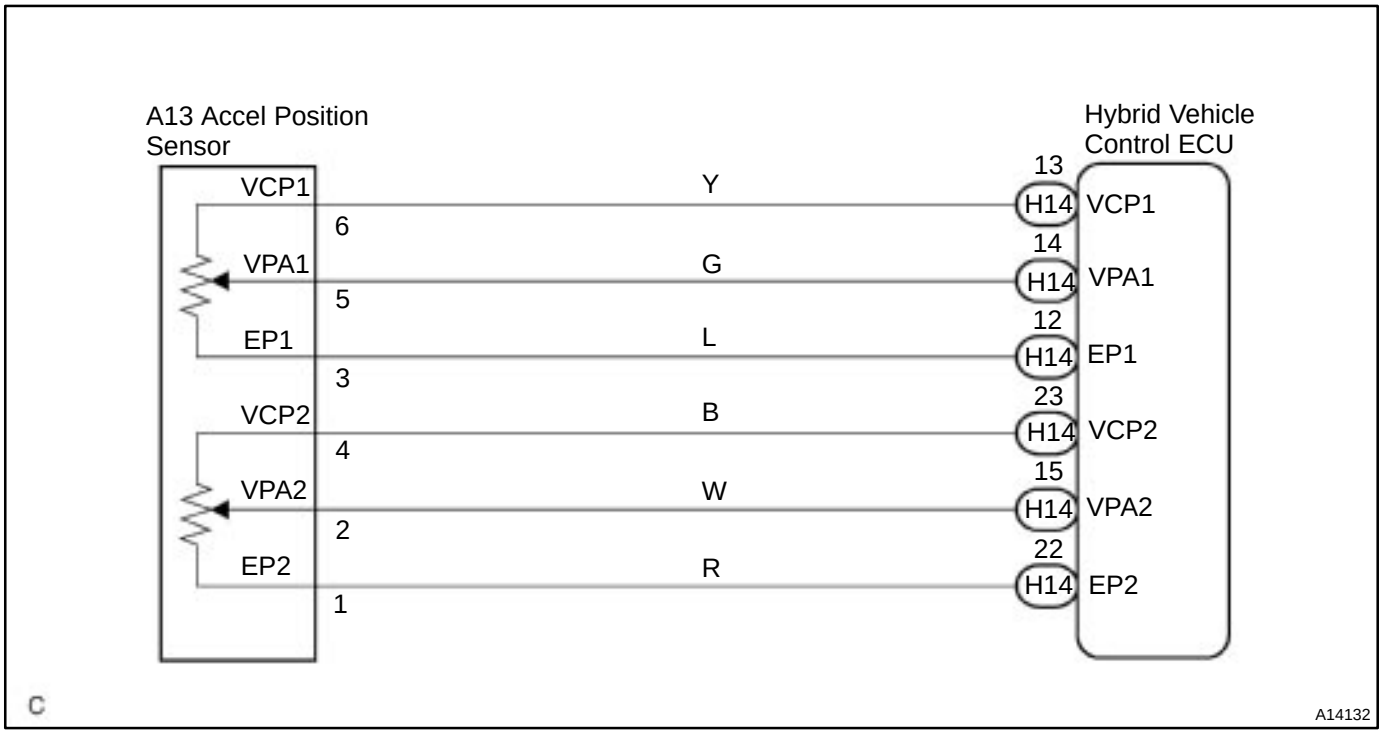

INSPECTION PROCEDURE

1	**Check for open, short and +B short in wire harness between HV ECU and accelerator pedal position sensor (See page IN–41).**

Terminals for checking open and short:

Accelerator pedal position sensor Terminals	HV ECU Terminals
VCP1	VCP1
VPA1	VPA1
EP1	EP1
VCP2	VCP2
VPA2	VPA2
EP2	EP2

HINT:
The acceleration pedal position sensor circuit has +B short if the voltage at the HV ECU VPA1 or VPA2 terminal is more than 5V with the ignition ON.

NG → **Repair or replace wire harness.**

OK

Check and replace accelerator pedal position sensor (See page SF–59).

DTC P1120 – Information code 106, 109, 110, 111, 112, 113, 114

INF. code.	Detecting Condition	Trouble Area
106	Main sensor internal error	• Accelerator pedal position sensor
109	Sub sensor internal error	
110	When difference between main sensor value and sub sensor value is large	
111	When sub sensor value changes while main sensor value does not	
112	When main sensor value changes while sub sensor value does not	
113	When any of the information code 104 – 112 continues to appear	
114	Accelerator pedal not smoothly returning to original position	

INSPECTION PROCEDURE

If the information code 106 or 109 – 114 is output,check and replace the accelerator pedal position sensor (See page SF–59**).**

DI82R–02

DTC	P1520	Stop Light Switch (Cruise Control System) Malfunction

CIRCUIT DESCRIPTION

The HV ECU detects the malfunction of the cruise control system and inhibits the operation of the cruise control.

It detects faulty output of the STP and ST1– signals sent from the stop light switch or an error signal from the brake ECU.

DTC P1520 – Information code 115

INF. code.	Detecting Condition	Trouble Area
115	Open or short in stop light switch circuit	• Stop light switch • Wire harness • Brake ECU

WIRING DIAGRAM

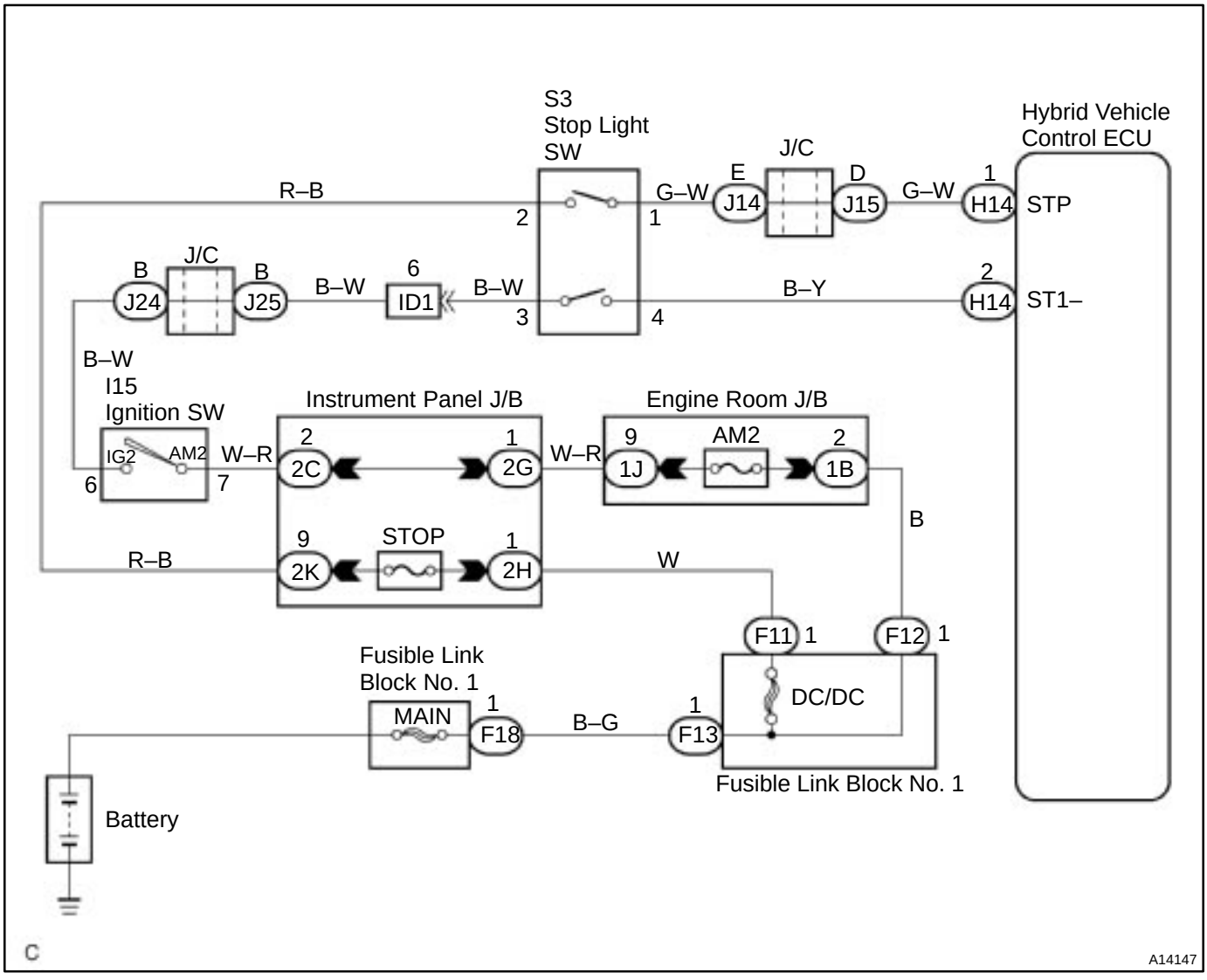

INSPECTION PROCEDURE

1	Is DTC of brake ECU being output?

YES → Check DTC of brake ECU (See page DI–358).

NO

2	Check voltage between terminal 2, 3 of stop light switch and body ground.

NG → Repair or replace wire harness or connector.

OK

3	Check for open and short in wire harness between stop light switch and terminals STP, ST1– of HV ECU (See page IN–41).

NG → Repair or replace wire harness.

OK

Check and replace stop light switch (See page BE–32).

DI82S–02

DTC	P1566	Cruise Control System Malfunction

CIRCUIT DESCRIPTION

The HV ECU and the brake ECU monitor the same STP signal. If any difference is identified between both received signals, the HV ECU outputs an error.

DTC P1566 – Information code 116

INF. code.	Detecting Condition	Trouble Area
116	When STP signal of HV ECU is inconsistent with that of brake ECU, with cruise control indicator ON.	• Brake ECU • Wire harness • Stop light switch

WIRING DIAGRAM

Refer to DI–215.

INSPECTION PROCEDURE

1	Is DTC of brake ECU being output (See page DI–351)?

YES → Check DTC of brake ECU (See page DI–351).

NO

2	Check for +B short in wire harness between stop light switch and terminals STP, ST1–of HV ECU (See page IN–41).

HINT:
Under the normal condition, the voltage of the HV ECU STP terminal is 0V when the brake pedal is released with the ignition OFF. If there is any output of voltage at this time, the stop light switch circuit has +B short.

NG → Repair or replace wire harness.

OK

3	**Check for open and short in wire harness between stop light switch and brake ECU.**

NG → **Repair or replace wire harness.**

OK

Check and replace stop light switch (See page BE–32).

DI82T–02

DTC	P1600	BATT Malfunction

CIRCUIT DESCRIPTION

Since the ECU back–up power source is used for DTC and freeze frame data memory, the back–up power source (BATT) continues to be supplied to the HV ECU even though the ignition switch is turned OFF.

DTC P1600 – Information code 117

INF. code.	Detecting Condition	Trouble Area
117	HV ECU back–up power source circuit malfunction	• HV Fuse • Wire harness

WIRING DIAGRAM

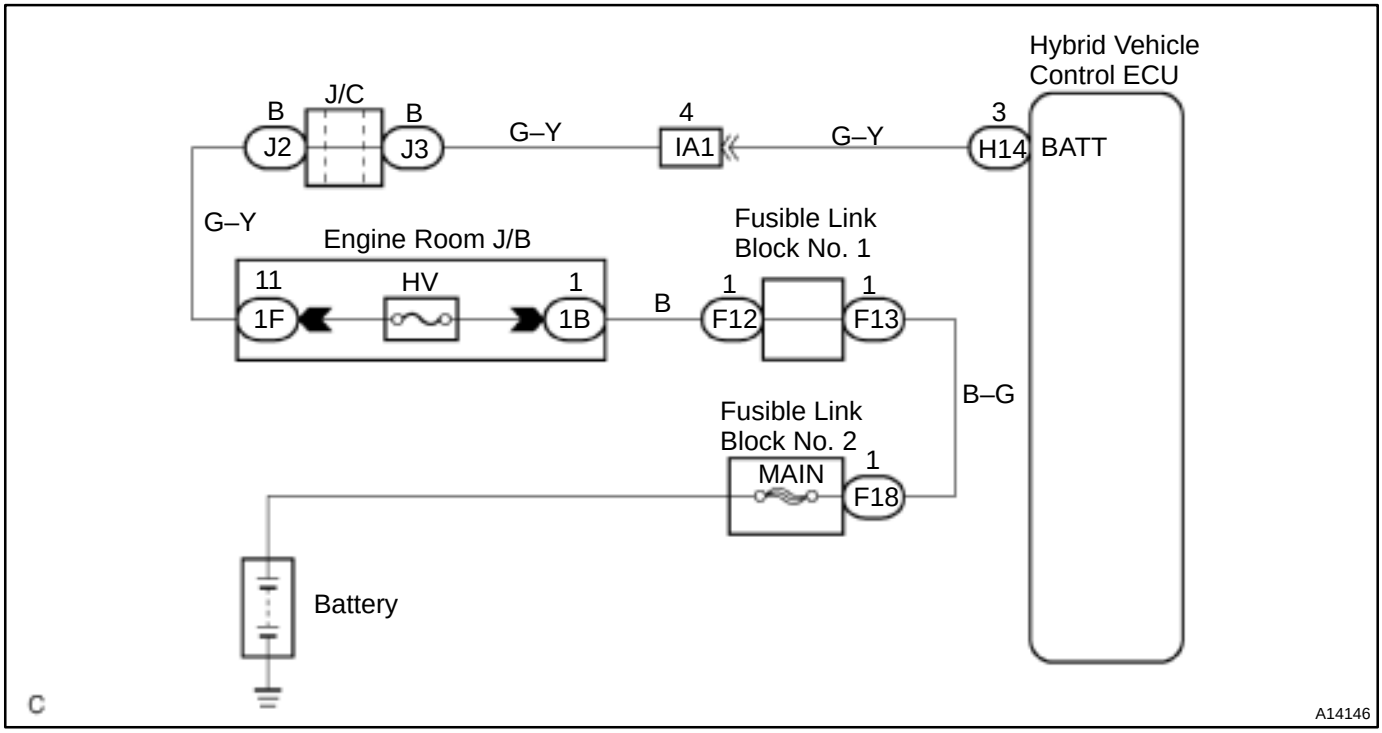

INSPECTION PROCEDURE

1	**Check continuity of HV fuse of engine room J/B.**

OK:

Continuity

NG → **Check for short in all harness and parts connected to HV fuse.**

OK

Repair or replace wire harness.

DI82U–02

DTC	P1780	Park/neutral Position Switch System Malfunction

CIRCUIT DESCRIPTION

The park/neutral position switch sends both main sensor signal (switch signal) and sub sensor signal (analogue value) to the HV ECU. The HV ECU uses those signals to detect the shift lever position (P, R, N, D or B) and to control the forward and backward movement of the vehicle.

HINT:

- When using an OBD scan tool other than TOYOTA hand–held tester, check all the steps.
- When using TOYOTA hand–held tester, confirm the information code and check it.

DTC P1780 – Information code 118, 119, 120, 121

INF. code.	Detecting Condition	Trouble Area
118	When more than 2 main signals are ON	• Park/neutral position switch • Wire harness
119	When main signal is not turned ON even though sub signal has been input	
120	Open or short in sub sensor circuit	
121	When shift position detected by main signal is different from that detected by sub signal	

WIRING DIAGRAM

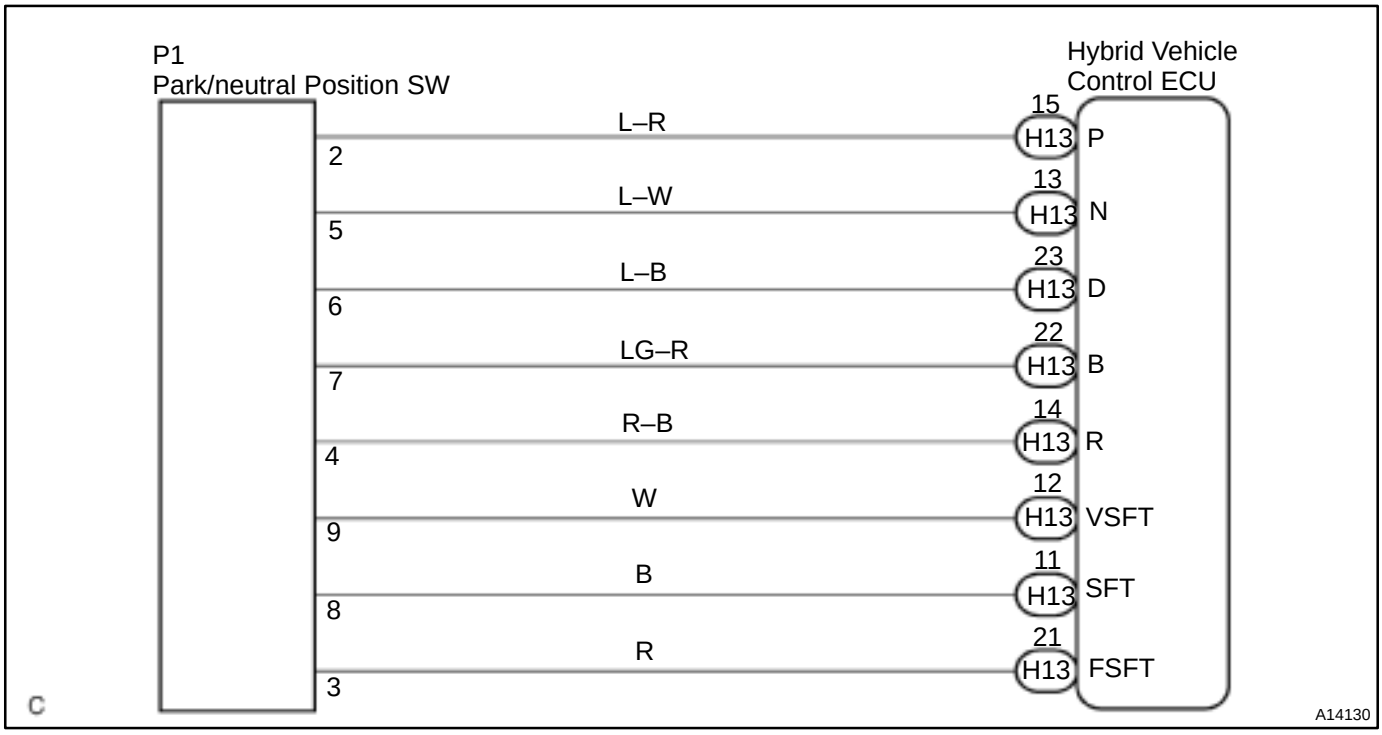

INSPECTION PROCEDURE

1	**Check for open and short in wire harness between park/neutral position switch and HV ECU (See page IN–41).**

Terminals for checking open and short:

Park/neutral Position Switch Terminals	HV ECU Terminals
2	P
5	N
6	D
7	B
4	R
9	VSFT
8	SFT
3	GSFT

NG → **Repair or replace wire harness.**

OK

Check and repair park/neutral position switch (See page HT–54).

DI82X–02

DTC	P3004	Power Cable Malfunction

CIRCUIT DESCRIPTION

If the inverter voltage is not decreased after discharge with the ignition switch OFF, the VM sensor in the inverter is determined as defective.

HINT:

- When using an OBD¿ scan tool other than TOYOTA hand–held tester, check all the steps.
- When using TOYOTA hand–held tester, confirm the information code and check it.

DTC P3004 – Information code 130

INF. Code.	Detecting Condition	Trouble Area
130	When HV battery voltage becomes lower than inverter voltage	Converter & inverter assembly

INSPECTION PROCEDURE

1	**Are there any other codes of HV ECU being outputs?**

YES → **Go to relevant DTC chart.**

NO

Replace converter & inverter assembly.

DTC P3004 – Information code 131

INF. Code.	Detecting Condition	Trouble Area
131	When condition (a), (b) or (c) is detected: (d) Main fuse blown out (e) Service plug disconnected (f) Limiter resistance cut off	• Service plug • Power cable • System main relay

INSPECTION PROCEDURE

1	**Is DTC of battery ECU being output?**

YES → **Check the applicable DTC.**

NO

2	**Check condition of service plug terminal (Loosened, poor contact, etc.).**

NG → **Replace service plug.**

OK

3	**Check continuity of power cable.**

OK:

Continuity :Less than 1 Ω

NG → **Replace the power cable.**

OK

Replace the system main relay.

CIRCUIT DESCRIPTION

DTC P3004 – Information code 132

INF. Code.	Detecting Condition	Trouble Area
132	When inverter voltage sensor is malfunctioning or limiter resistance value increases.	• Converter & inverter assembly • Power cable • System main relay

INSPECTION PROCEDURE

1	**Are other information codes recorded?**

YES → **Check applicable information code (See page DI–197).**

NO

2	**Check continuity of limiter resistance in system main relay.**

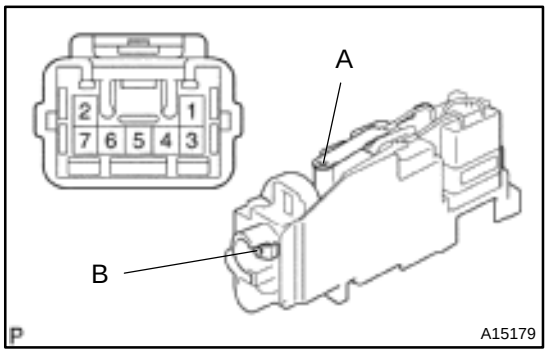

PREPARATION:

Remove the system main relay.

CHECK:

(a) Apply battery voltage across terminals 1 and 3.

(b) Using an ohmmeter, check that there is continuity between terminals A and B.

OK:

Continuity

NG → **Replace the system main relay.**

OK

Check continuity and replace power cable.

CIRCUIT DESCRIPTION

The HV ECU gives warning to the driver and performs the fail safe control, according to the abnormal signal received from the battery ECU.

DTC P3004 – Information code 133

INF. Code.	Detecting Condition	Trouble Area
133	Input of abnormal signal from battery ECU	• HV battery system

INSPECTION PROCEDURE

If the information code 133 output, after confirming the DTC of the HV Battery ECU, check and repair the applicable DTC. After repairing it, record the DTC of the HV ECU, freeze frame data and history of operation. Then, clear the DTC and check it one more time after starting the system again (”READY” light ON).

DI82Y–02

DTC	P3100	HV ECU Malfunction

CIRCUIT DESCRIPTION

The HV ECU compares Ne signal with G signal that are sent from the ECM and checks whether the engine rpm signal is correct or not.

HINT:

- When using an OBD scan tool other than TOYOTA hand–held tester, check all the steps.
- When using TOYOTA hand–held tester, confirm the information code and check it.

DTC P3100 – Information code 136, 137

INF. Code.	Detecting Condition	Trouble Area
136	Open or short in GO signal circuit	• Wire harness • ECM • Crankshaft position sensor • Camshaft position sensor
137	Engine speed sensor malfunction	

WIRING DIAGRAM

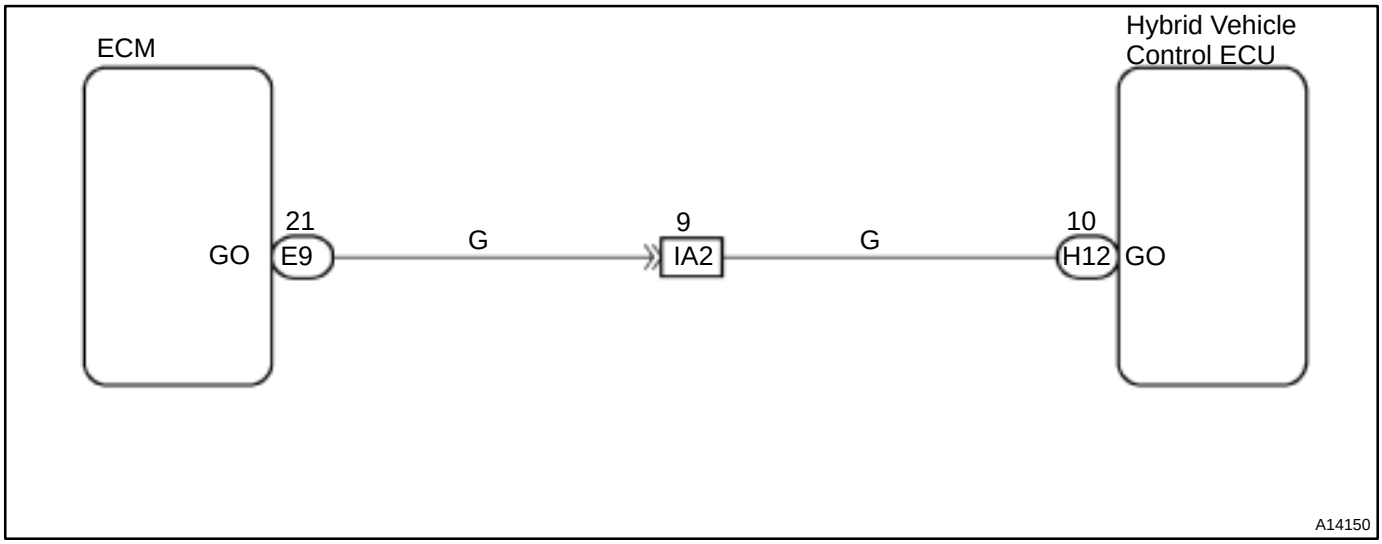

INSPECTION PROCEDURE

1	Is DTC of ECM being output (See page DI–1)?

Yes → Check applicable DTC (See page DI–1).

NO

2	Check for open and short in wire harness between GO terminal of HV ECU and GO terminal of ECM (See page IN–41).

NG → Repair or replace wire harness.

OK

3	Check resistance of crankshaft position sensor and camshaft position sensor (See page IG–1).

NG → Replace the crankshaft position sensor or camshaft position sensor.

OK

Replace ECM.

CIRCUIT DESCRIPTION

The HV ECU checks the current value of the battery and detects malfunction.

DTC P3100 – Information code 127, 128, 138

INF. Code.	Detecting Condition	Trouble Area
127	+B short in IB terminal circuit of HV ECU	• Wire harness • HV ECU
128	Open or short in IB terminal circuit of HV ECU	
138	When the difference between battery current of HV ECU and current of battery is large.	

WIRING DIAGRAM

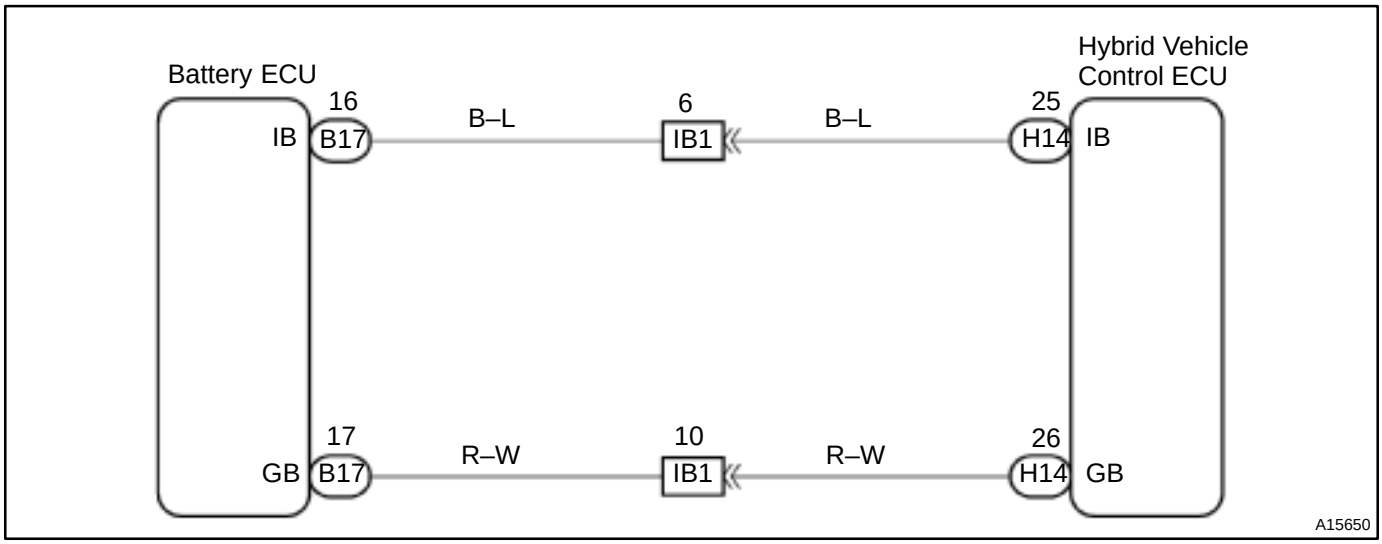

INSPECTION PROCEDURE

1	**Is DTC of battery ECU being output (See page DI–312)?**

HINT:
In case of output of Information code 128, check whether V– wire harness of battery ECU DTC P3115 is open or short at first. When there is no–abnormality, go to step 2.

Yes → **Check applicable DTC (See page DI–312).**

NO

2	**Check for open, short and +B short in wire harness between HV ECU IB and GB terminals and battery ECU IB and GB terminals (See page IN–41).**

HINT:
The HV ECU IB terminal has +B short if there is no open in wire harness and the voltage of the IB or GB terminal is more than 5 V with the ignition ON.

NG → **Repair or replace wire harness.**

OK

Replace HV ECU.

CIRCUIT DESCRIPTION

The HV ECU checks the ST signal and detects malfunction. If the ST signal has +B short, the ST will always be ON. Therefore, even with the IG ON when starting the THS, the system will start. To prevent this from happening, the HV ECU detects the malfunction of the ST signal.

DTC P3100 – Information code 142

INF. Code.	Detecting Condition	Trouble Area
142	When ST signal of HV ECU is ON, with ignition switch turned OFF.	• Wire harness • HV ECU • Ignition switch

WIRING DIAGRAM

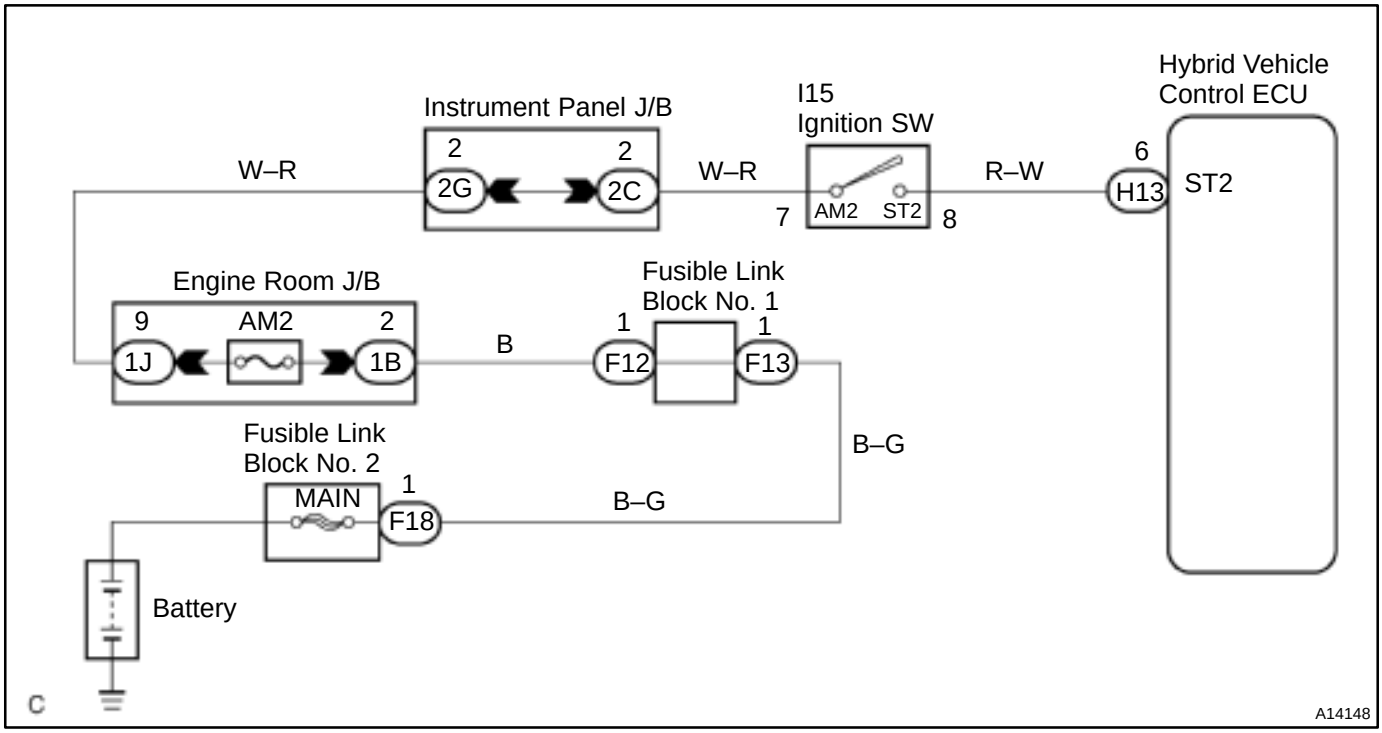

INSPECTION PROCEDURE

1	**Check ignition switch (See page BE–17).**

NG → **Replace ignition switch (See page SR–11).**

NO

2	**Check for +B short in wire harness between ignition switch ST2 terminal and HV ECU ST2 terminal (See page IN–41).**

HINT:
The HV ECU ST circuit has +B short if battery voltage is supplied to the ST2 terminal.

NG → **Repair or replace wire harness.**

OK

Replace HV ECU.

CIRCUIT DESCRIPTION

The HV ECU checks the internal operation of the ECU and detects malfunction.

DTC P3100 – Information code 134, 135, 139, 140, 141, 143, 144, 145, 146, 147, 148, 149, 150, 151, 152, 153, 154, 155, 156, 157, 158, 159, 160, 161, 162, 163, 164, 165, 166, 167, 168, 169, 170, 171, 172, 173, 174, 175, 176, 177, 178, 179, 180, 181, 182, 183, 184, 185, 186, 187, 188, 189, 190, 191, 192, 193, 194, 195, 196, 197, 198, 199, 200, 201, 202, 203, 271, 310, 390, 391, 392, 393

INF. Code.	Detecting Condition	Trouble Area
134	HV ECU internal error	• HV ECU
135		
139		
140		
141		
143		
144		
145		
146		
147		
148		
149		
150		
151		
152		
153		
154		
155		
156		
157		
158		
159		
160		
161		
162		
163		
164		
165		
166		
167		
168		
169		

INF. Code.	Detecting Condition	Trouble Area
170	HV ECU internal error	• HV ECU
171		
172		
173		
174		
175		
176		
177		
178		
179		
180		
181		
182		
183		
184		
185		
186		
187		
188		
189		
190		
191		
192		
193		
194		
195		
196		
197		
198		
199		
200		
201		
202		
203		
271		
310		
390		
391		
392		
393		

INSPECTION PROCEDURE

If any of the above information codes is output, replace the HV ECU.

DI830–02

DTC	P3105	Battery ECU Communication Circuit Malfunction

CIRCUIT DESCRIPTION

The HV ECU monitors the communication signal from the battery ECU and if it cannot monitor it due to noise or other reasons, judges as an error.

DTC P3105 – Information code 206, 207, 208

INF. Code.	Detecting Condition	Trouble Area
206	When communication between battery ECU and HV ECU is abnormal 1 sec. after ignition is turned ON	• Wire harness • Battery ECU
207		
208		

WIRING DIAGRAM

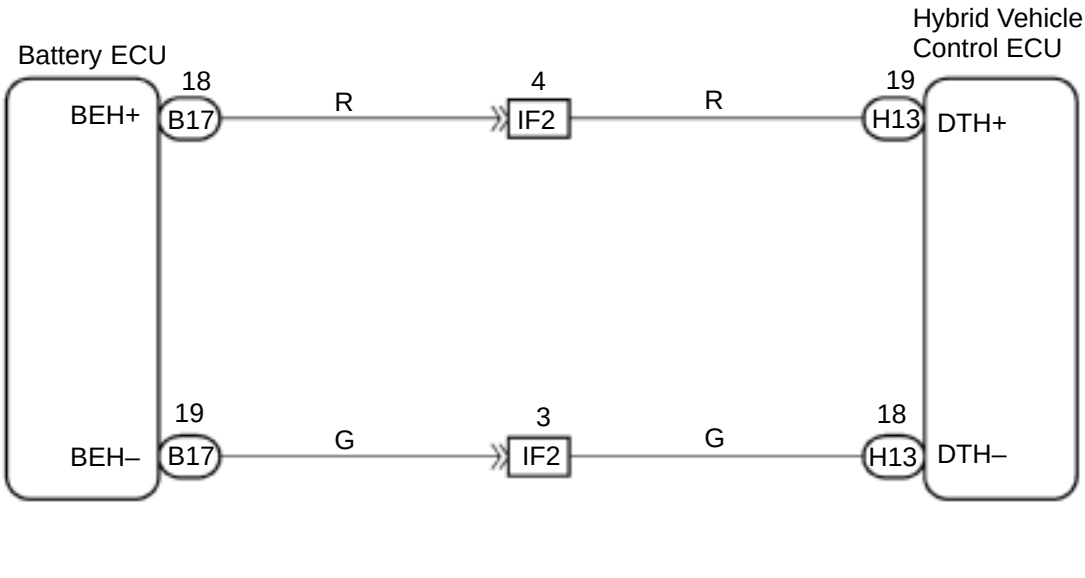

A14734

INSPECTION PROCEDURE

1	Check for open and short in wire harness between HV ECU terminals (DTH+, DTH–) and battery ECU terminals (BEH+, BEH–) (See page IN–41).

NG → Repair or replace wire harness.

OK →

Replace battery ECU.

DI831–02

DTC	P3106	ECM Communication Circuit Malfunction

CIRCUIT DESCRIPTION

The HV ECU monitors the communication signal from the ECM and if it cannot monitor it due to noise or other reasons, judges as an error.

HINT:

- When using an OBD¿ scan tool other than TOYOTA hand–held tester, check all the steps.
- When using TOYOTA hand–held tester, confirm the information code and check it.

DTC P3106 – Information code 209, 210, 211

INF. Code.	Detecting Condition	Trouble Area
209	When communication between ECM and HV ECU is abnormal 1 sec. after ignition is turned ON	• Wire harness • ECM
210		
211		

WIRING DIAGRAM



INSPECTION PROCEDURE

1	**Check for open and short in wire harness between HV ECU terminals (ETH+, ETH–) and ECM terminals (ETH+, ETH–) (See page IN–41).**

NG → **Repair or replace wire harness.**

OK

Replace ECM.

CIRCUIT DESCRIPTION

DTC P3106 – Information code 212

INF. Code.	Detecting Condition	Trouble Area
212	Input of abnormal signal from ECM	• ECM

INSPECTION PROCEDURE

If the information code 212 is output, after confirming the DTC of the ECM, check and repair the applicable DTC. Prior to repairing it, record the DTC of the HV ECU, freeze frame data and history of operation. Then, clear the DTC and check it one more time after starting the system again (”READY” light ON).

CIRCUIT DESCRIPTION

DTC P3106 – Information code 394

INF. Code.	Detecting Condition	Trouble Area
394	When ECM does not operate	• ECM

INSPECTION PROCEDURE

If the information code 394 is output, check and repair the ECM power source circuit. If there is no problem in the power source circuit, replace the ECM. Prior to the repair, record the DTC of the HV ECU, freeze frame data and history of operation and clear them. Then, start the system one more time (”READY” light ON) and check the DTC again.

DTC	P3107	Airbag ECU Communication Circuit Malfunction

CIRCUIT DESCRIPTION

The HV ECU detects the malfunction of the collision signal circuit from the airbag and gives warning to the driver.

DTC P3107 – Information code 213, 214, 215

INF. Code.	Detecting Condition	Trouble Area
213	When communication between airbag ECU and HV ECU is abnormal 10 sec. after ignition is turned ON	• Wire harness • Airbag sensor assembly
214		
215		

WIRING DIAGRAM

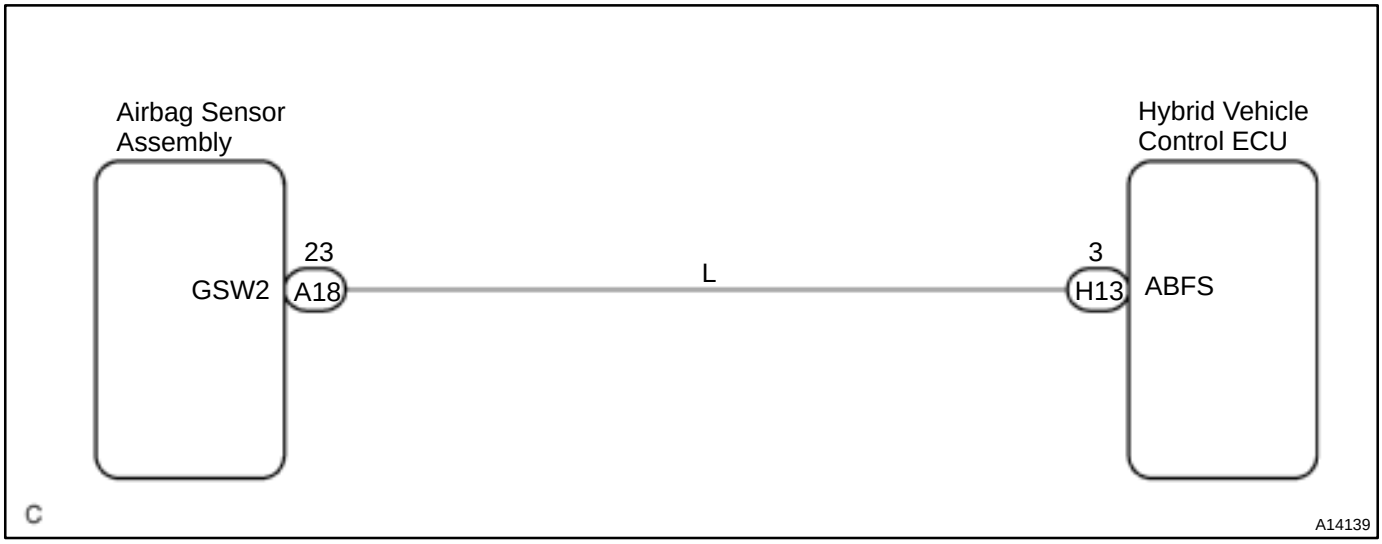

INSPECTION PROCEDURE

1	**Check for open, short and +B short in wire harness between HV ECU ABFS terminals and airbag ECU GSW 2 terminal (See page IN–41).**

HINT:
Confirm that there is no open circuit in the wire harness. If the battery voltage is always applied to the HV ECU ABFS terminal with the ignition ON, the airbag signal circuit has +B short.

NG → **Repair or replace wire harness.**

OK

Replace airbag sensor assembly.

DI834–02

DTC	P3109	Brake ECU Communication Circuit Malfunction

CIRCUIT DESCRIPTION

The HV ECU performs multiple checks to avoid any malfunction that may occur through the communication with the brake ECU due to a noise, etc.

HINT:

- When using an OBD scan tool other than TOYOTA hand–held tester, check all the steps.
- When using TOYOTA hand–held tester, confirm the information code and check it.

DTC P3109 – Information code 218, 219, 220, 221

INF. Code.	Detecting Condition	Trouble Area
218	When communication between brake ECU and HV ECU is abnormal 1.5 sec. after ignition is turned ON	• Wire harness • Brake ECU
219		
220		
221		

WIRING DIAGRAM

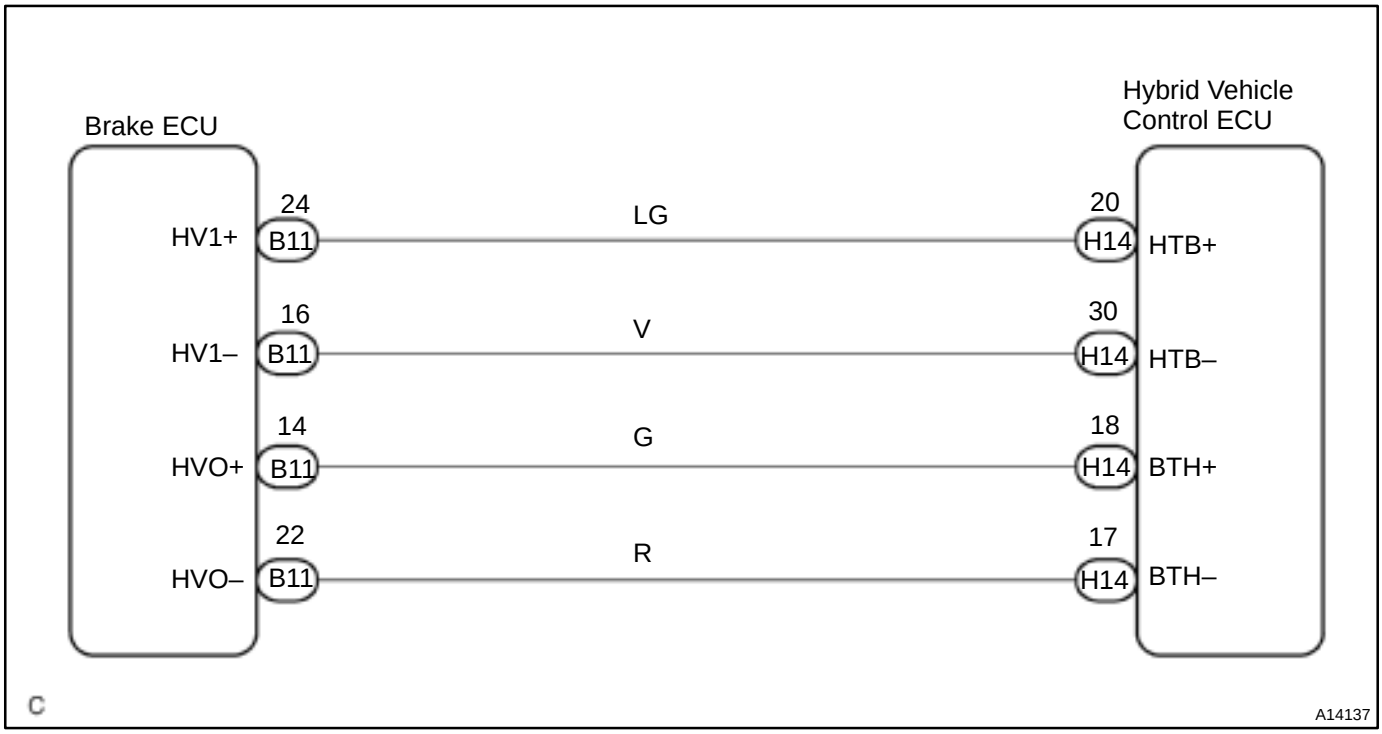

INSPECTION PROCEDURE

1	**Check for open, short and +B short in wire harness between HV ECU terminals (HTB+, HTB–, BTH+, BTH–) and brake ECU terminals (HV1+, HV1–, HVO+, HVO–) (See page IN–41).**

HINT:
Confirm that there is no open circuit in the wire harness. If the voltage of each HV ECU terminals (HTB+, HTB–, BTH+ and BTH–) is always more than 5 V with the ignition ON, the brake ECU communication circuit has +B short.

NG → **Repair or replace wire harness.**

OK

Replace brake ECU.

CIRCUIT DESCRIPTION

DTC P3109 – Information code 222

INF. Code.	Detecting Condition	Trouble Area
222	When abnormal data is received from brake ECU.	• Brake ECU

INSPECTION PROCEDURE

If the information code 222 is output, after confirming the DTC of the brake ECU, check and repair the applicable DTC. Prior to repairing it, record the DTC of the HV ECU, freeze frame data and history of operation. Then, clear the DTC and check it one more time after starting the system again (”READY” light ON).

DI835–02

DTC	P3110	IGCT Relay Malfunction

CIRCUIT DESCRIPTION

The HV ECU checks the IGCT relay and detects malfunction.

DTC P3110 – Information code 223

INF. Code.	Detecting Condition	Trouble Area
223	When IGCT relay is always closed.	• Wire harness • IGCT relay

WIRING DIAGRAM

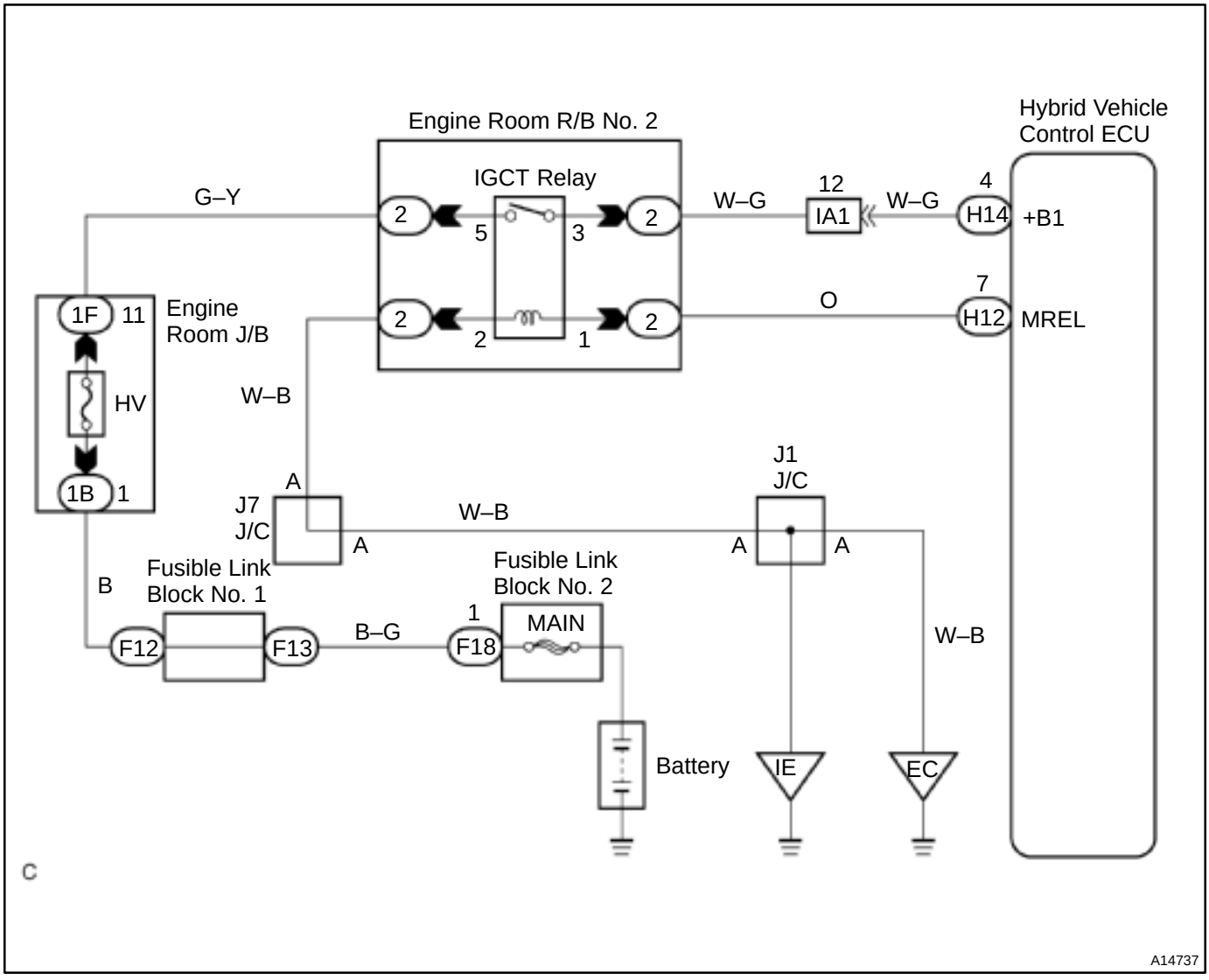

INSPECTION PROCEDURE

1	**Check IGCT relay.**

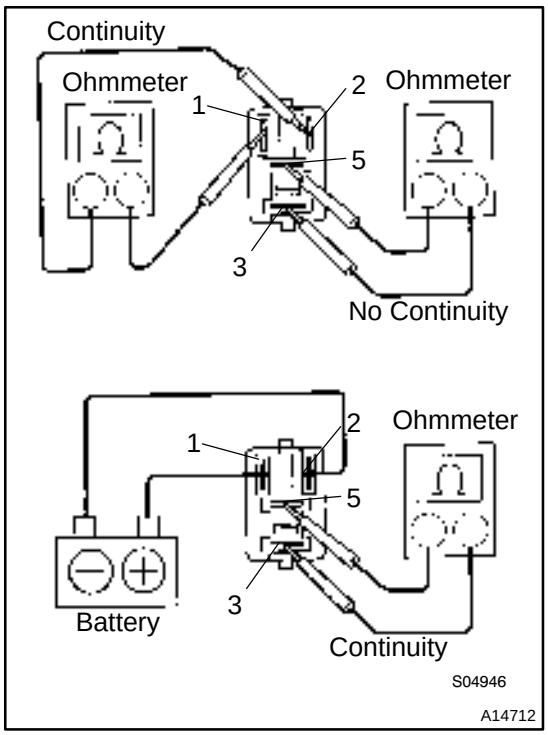

PREPARATION:

Remove the IGCT relay from the engine room R/B No. 3.

CHECK:

(a) Using an ohmmeter, check that there is continuity between terminals 1 and 2.

(b) Check that there is no continuity between terminals 3 and 5.

(c) Apply battery voltage across terminals 1 and 2. Using an ohmmeter, check that there is continuity between terminals 3 and 5.

OK:

(a) Continuity
(b) No continuity
(c) Continuity

NG → **Replace IGCT relay.**

OK

Check for +B short in wire harness between HV ECU and IGCT relay (See page IN–41).
Repair or replace wire harness.

HINT:

The HV ECU MREL terminal has +B short if the battery voltage is always applied to the HV ECU +B1 or MREL terminal with the ignition OFF.

DI836–02

DTC	P3115	System Main Relay Malfunction

CIRCUIT DESCRIPTION

The HV ECU checks that the system main relay (No. 1, No. 2, No. 3) is normally operating and detects malfunction.

HINT:

- When using an OBD scan tool other than TOYOTA hand–held tester, check all the steps.
- When using TOYOTA hand–held tester, confirm the information code and check it.

DTC P3115 – Information code 224, 225, 226, 227, 228, 229

INF. Code.	Detecting Condition	Trouble Area
224	Open or +B short in system main relay No. 1 circuit	• Wire harness • System main relay • HV ECU
225	Short in system main relay No. 1 circuit	
226	Open or +B short in system main relay No. 2 circuit	
227	Short in system main relay No. 2 circuit	
228	Open or +B short in system main relay No. 3 circuit	
229	Short in system main relay No. 3 circuit	

WIRING DIAGRAM

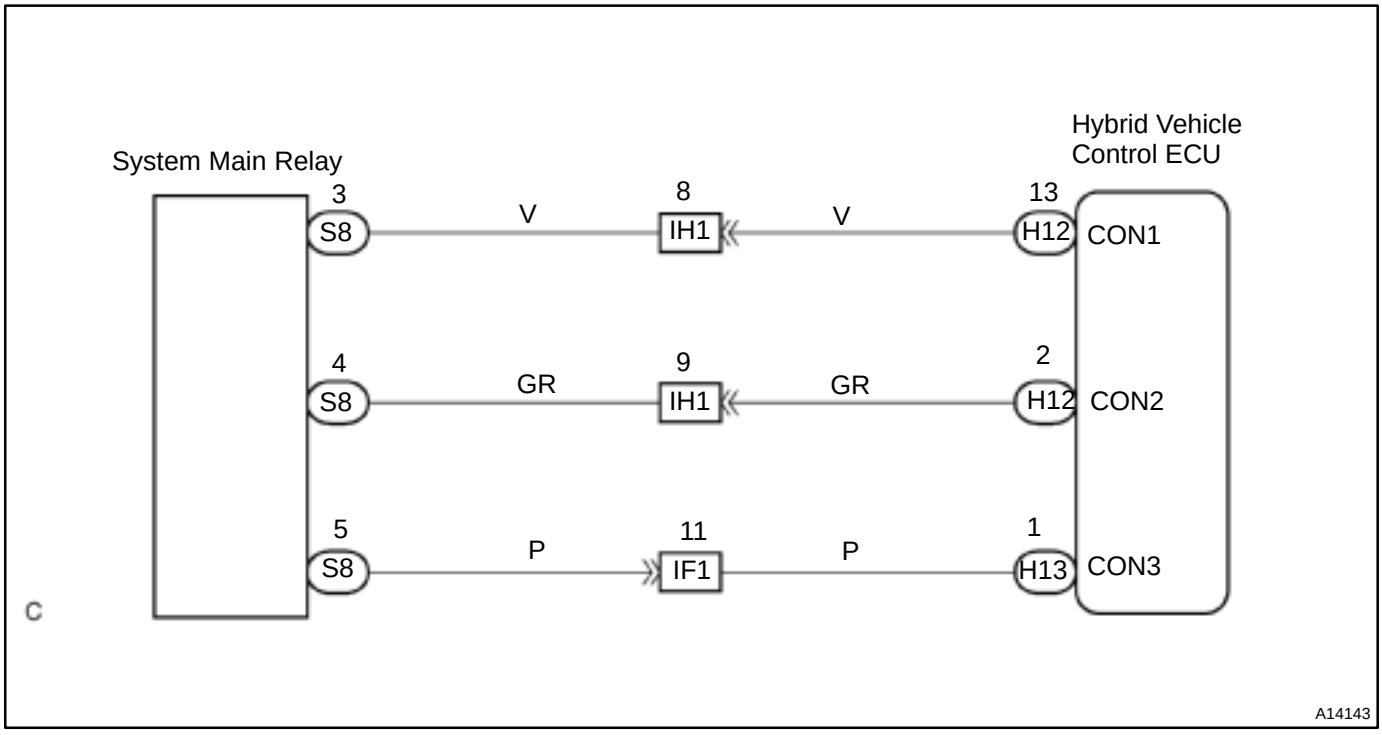

INSPECTION PROCEDURE

1	**Check for open, short and +B short in wire harness between HV ECU terminals (Cont1, Cont2, Cont3) and system main relay terminals (See page IN–41).**

HINT:
Confirm that there is no open circuit in the wire harness. If the battery voltage is always applied to the HV ECU Cont1, Cont2 and Cont3 terminals with the ignition ON (”READY” light OFF), the system main relay has +B short.

NG → **Repair or replace wire harness.**

OK

2	**Is any of the information code 231, 232 or 233 recorded?**

NO → **Replace HV ECU.**

YES

Replace HV ECU and system main relay.

CIRCUIT DESCRIPTION

If the system main relay is deposited, it might be impossible to shut down the high voltage system. Therefore, the HV ECU checks the system main relay and stops the system if malfunction is detected.

DTC P3115 – Information code 231, 232, 233

INF. Code.	Detecting Condition	Trouble Area
231	System main relay + terminal deposited	• System main relay • HV ECU
232	System main relay – terminal deposited	
233	System main relay + & – terminal deposited	

INSPECTION PROCEDURE

If any of these information codes is output, replace the system main relay.

If one of the information codes above and any of the information codes 224 – 229 are recorded at the same time, also replace the HV ECU.

DI837–02

DTC	P3120	HV Transaxle Malfunction

CIRCUIT DESCRIPTION

The HV ECU checks the energy balance and detects abnormality if the magnetism of the motor or generator greatly decreases.

HINT:

- When using an OBD□ scan tool other than TOYOTA hand–held tester, check all the steps.
- When using TOYOTA hand–held tester, confirm the information code and check it.

DTC P3120 – Information code 234, 235, 236, 237

INF. Code.	Detecting Condition	Trouble Area
234	Small reduction of motor magnetism	• HV transaxle (motor) • System main relay
235	Large reduction of motor magnetism	
236	Small reduction of generator magnetism	• HV transaxle (generator) • System main relay
237	Large reduction of generator magnetism	

INSPECTION PROCEDURE

1	Is DTC of HV battery ECU being output?

YES → Check applicable DTC.

NO

2	Turn the ignition switch to ST(ON) and check if malfunction occurs again.

NO → Replace system main relay.

YES

Replace HV transaxle motor or generator.

CIRCUIT DESCRIPTION

The HV ECU detects the malfunction of the transmission system. Judging from a malfunction symptom, it records one of the four information codes.

DTC P3120 – Information code 239, 240, 241, 242

INF. Code.	Detecting Condition	Trouble Area
239	Shaft damaged	• HV transaxle
240	Generator locked	
241	Torque limiter sliding	
242	Planetary gear locked	

INSPECTION PROCEDURE

When Information code 239 in stored, check that the connector of the crankshaft position sensor is properly connected. If disconnected, the code 239 may be stored.

If any of these information codes is output, replace the defective part inside the HV transaxle.

CIRCUIT DESCRIPTION

The HV ECU checks the motor resolver signal voltage and circuit impedance to detect malfunction.

DTC P3120 – Information code 243, 245

INF. Code.	Detecting Condition	Trouble Area
243	Motor resolver inter–phase short	• HV transaxle • Wire harness
245	Open or short in motor resolver circuit	

WIRING DIAGRAM

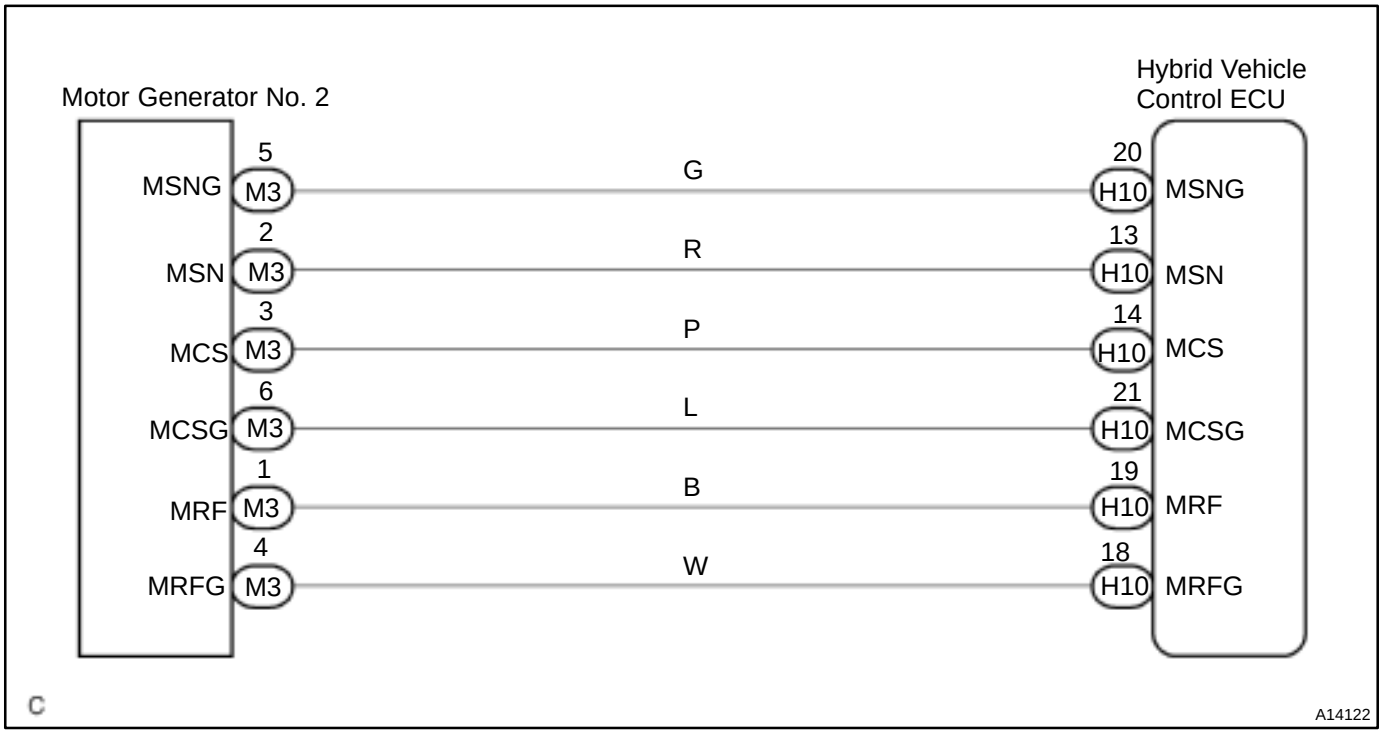

INSPECTION PROCEDURE

1	**Check for open and short in wire harness between HV transaxle and HV ECU (See page IN–41).**

Terminals for checking open and short:

MG2 Terminals	HV ECU Terminals
MSNG	MSNG
MSN	MSN
MCS	MCS
MCSG	MCSG
MRF	MRF
MRFG	MRFG

NG → **Repair or replace wire harness.**

OK

Check for open in motor resolver or inter–phase short and then replace HV transaxle motor. Check motor resolver (See page HV–40).

CIRCUIT DESCRIPTION

The HV ECU checks the motor resolver signal voltage and circuit impedance to detect malfunction.

DTC P3120 – Information code 244, 246

INF. Code.	Detecting Condition	Trouble Area
244	Motor resolver inter–phase short (when there is a history that the state of malfunction continued during inverter fail safe mode)	• HV transaxle • Wire harness
246	Open or short in motor resolver circuit (when there is a history that the state of malfunction continued during inverter fail safe mode)	

WIRING DIAGRAM

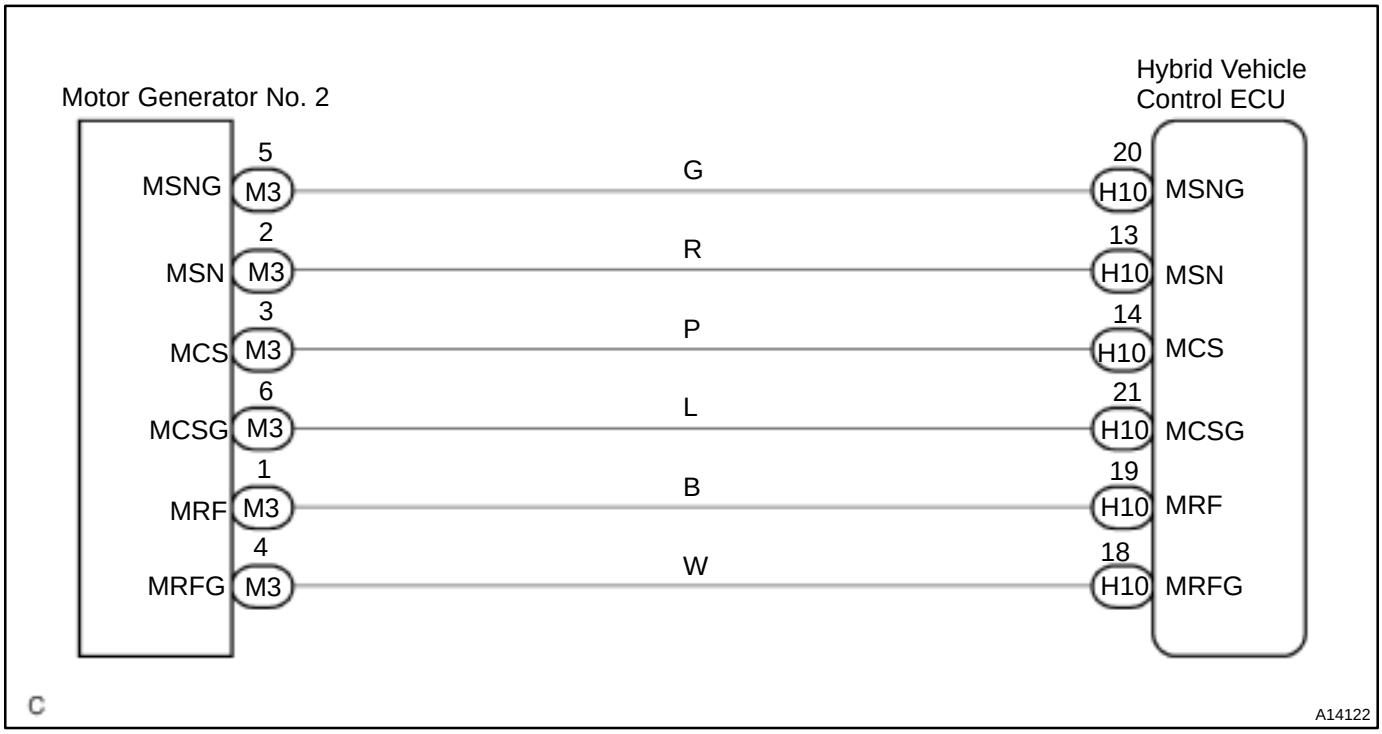

INSPECTION PROCEDURE

1	**Check for open and short in wire harness between HV transaxle and HV ECU (See page IN–41).**

Terminals for checking open and short:

MG2 Terminals	HV ECU Terminals
MSNG	MSNG
MSN	MSN
MCS	MCS
MCSG	MCSG
MRF	MRF
MRFG	MRFG

NG → **Repair or replace wire harness.**

OK

2	**Is there DTC P3100 being output?**

YES → **Check applicable DTC.**

NO

3	**Is there DTC P3125 being output?**

YES → **Check applicable DTC.**

NO

Replace HV transaxle motor.

CIRCUIT DESCRIPTION

The HV ECU checks the motor temperature and controls the load limitation in order to prevent the motor from overheating. Also, it detects the abnormality of the line connection of the motor temperature sensor and malfunction of the sensor itself.

DTC P3120 – Information code 247, 249

INF. Code.	Detecting Condition	Trouble Area
247	GND short in motor temperature sensor	• HV transaxle • Wire harness
249	Open or +B short in motor temperature sensor	

WIRING DIAGRAM

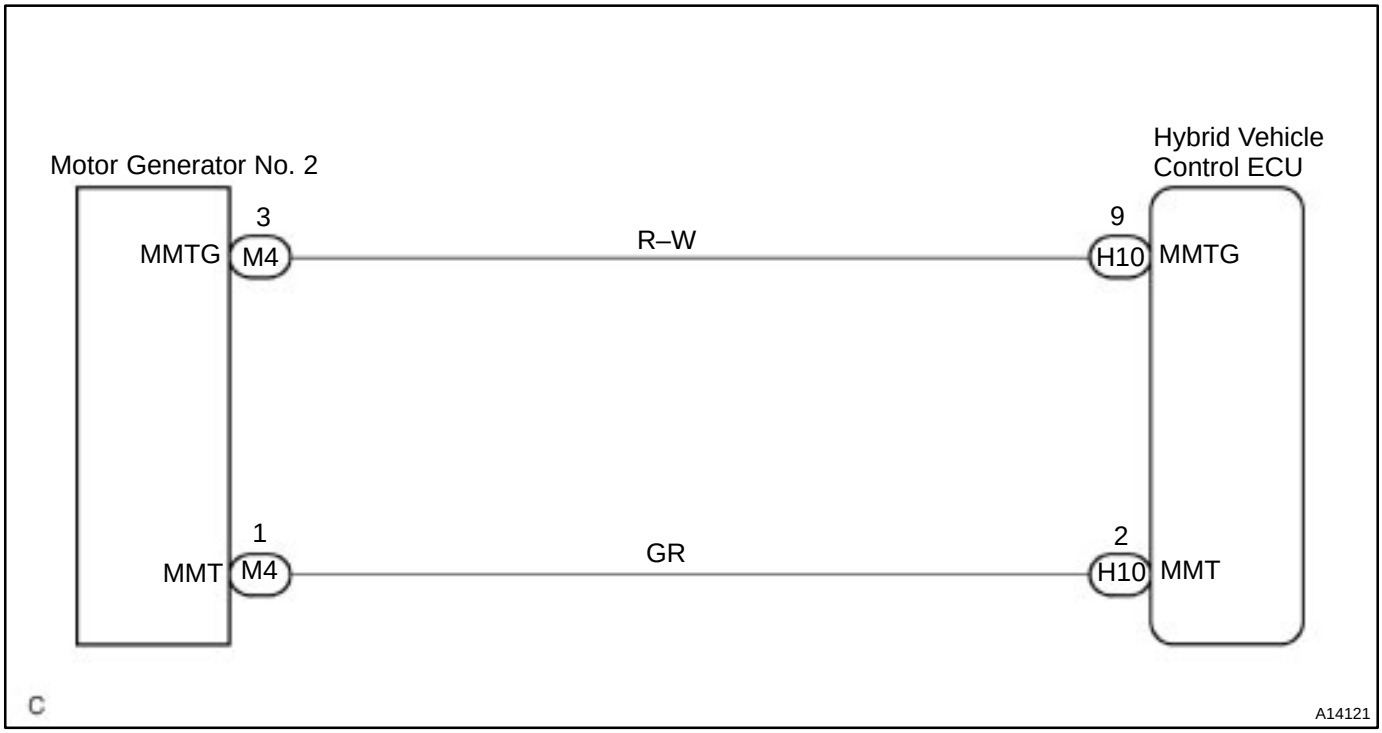

INSPECTION PROCEDURE

1	**Check open, short and +B short in wire harness between HV transaxle motor temperature sensor MMT and MMTG terminals and HV ECU MMT and MMTG terminals (See page IN–41).**

HINT:
Confirm that there is no open circuit in the wire harness. If the voltage of the HV ECU MMT terminal is always more than 5V with the ignition ON, the motor temperature sensor circuit has +B short.

NG → **Repair or replace wire harness.**

OK

Check for open in motor temperature sensor and then replace HV transaxle motor.
Check motor temperature sensor (See page HV–40).

CIRCUIT DESCRIPTION

DTC P3120 – Information code 248, 250

INF. Code.	Detecting Condition	Trouble Area
248	Motor temperature sensor malfunction	• HV transaxle motor
250	Motor temperature sensor performance problem	

INSPECTION PROCEDURE

If the information code 248 or 250 is output, replace the HV transaxle motor.

CIRCUIT DESCRIPTION

The HV ECU checks the generator resolver signal voltage and circuit impedance to detect malfunction.

DTC P3120 – Information code 253, 255

INF. Code.	Detecting Condition	Trouble Area
253	Generator resolver inter–phase short	• HV transaxle (generator) • Wire harness
255	Open or short in generator resolver circuit	

WIRING DIAGRAM

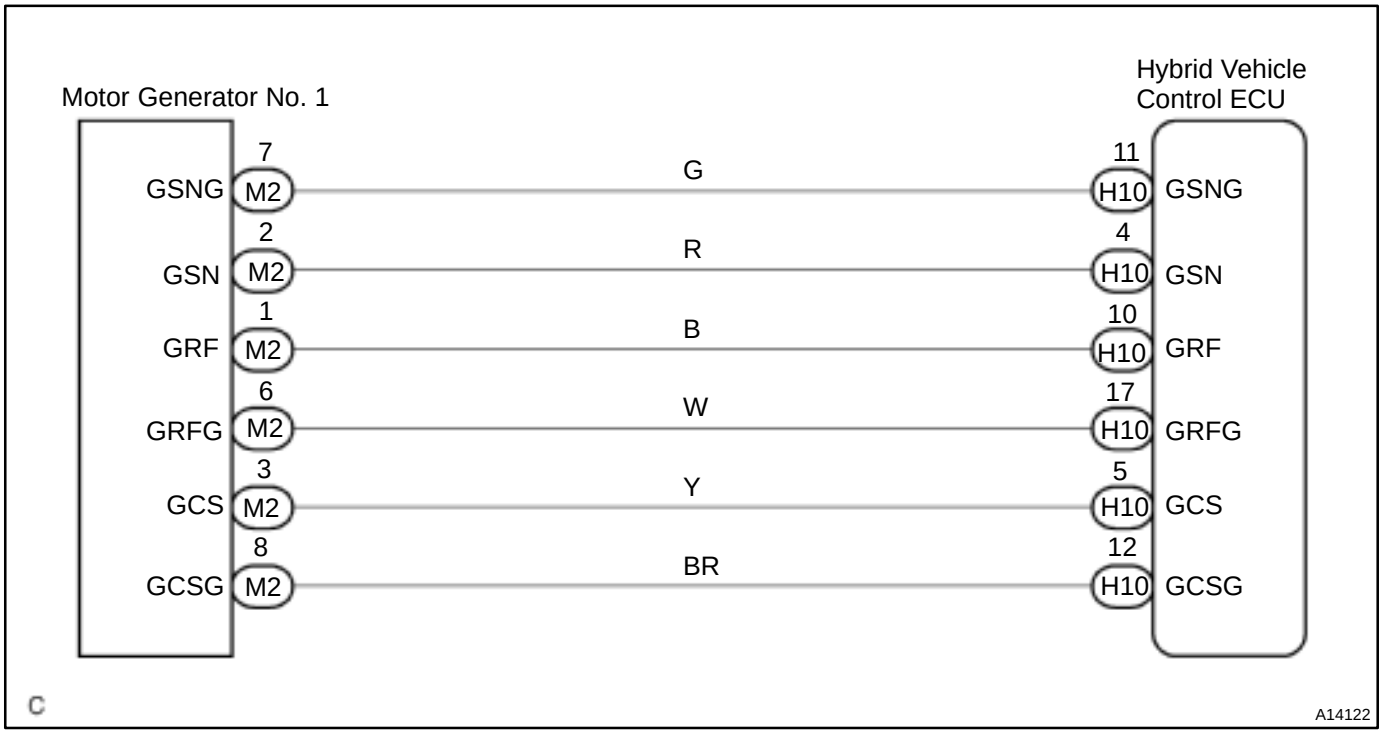

INSPECTION PROCEDURE

1	**Check for open and short in wire harness between HV transaxle and HV ECU (See page IN–41).**

Terminals for checking open and short:

MG1 Terminals	HV ECU Terminals
GSNG	GSNG
GSN	GSN
GCS	GCS
GCSG	GCSG
GRF	GRF
GRFG	GRFG

NG → **Repair or replace wire harness.**

OK

Check for open in generator resolver or inter–phase short and then replace HV transaxle generator.
Check generator resolver (See page HV–40).

CIRCUIT DESCRIPTION

The HV ECU checks the generator resolver signal voltage and circuit impedance to detect malfunction.

DTC P3120 – Information code 254, 256

INF. Code.	Detecting Condition	Trouble Area
254	Generator resolver inter–phase short (when there is a history that the state of malfunction continued during inverter fail safe mode)	• HV transaxle (generator) • Wire harness
256	Open or short in generator resolver circuit (when there is a history that the state of malfunction continued during inverter fail safe mode)	

WIRING DIAGRAM

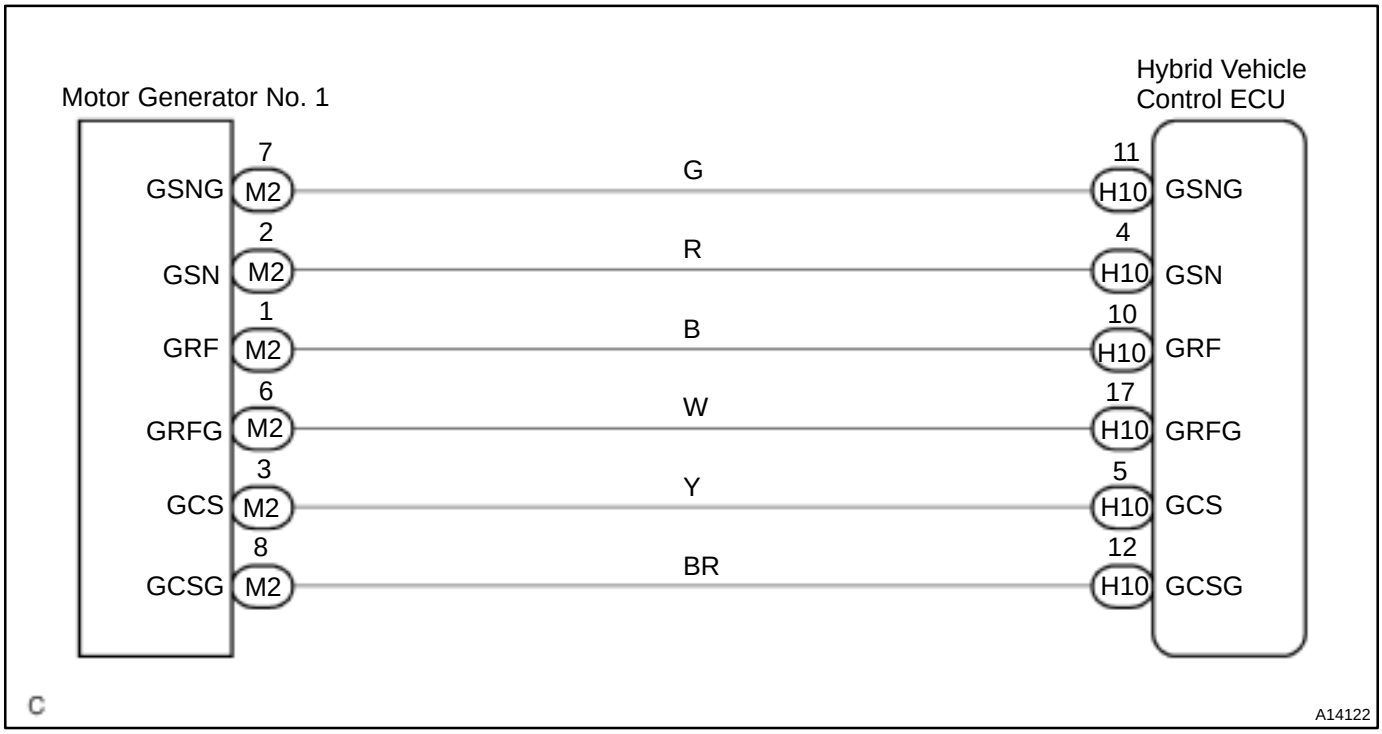

INSPECTION PROCEDURE

1	**Check for open and short in wire harness between HV transaxle and HV ECU (See page IN–41).**

Terminals for checking open and short:

MG2 Terminals	HV ECU Terminals
MSNG	MSNG
MSN	MSN
MCS	MCS
MCSG	MCSG
MRF	MRF
MRFG	MRFG

NG → **Repair or replace wire harness.**

OK

2	**Is there DTC P3100 being output?**

YES → **Check applicable DTC.**

NO

3	**Is there DTC P3125 being output?**

YES → **Check applicable DTC.**

NO

Replace HV transaxle generator.

CIRCUIT DESCRIPTION

The HV ECU checks the generator temperature and controls the load limitation in order to prevent the generator from overheating. Also, it detects the abnormality of the line connection of the generator temperature sensor and the malfunction of the sensor itself.

DTC P3120 – Information code 257, 259

INF. Code.	Detecting Condition	Trouble Area
257	GND short in generator temperature sensor	• HV transaxle • Wire harness
259	Open or +B short in generator temperature sensor	

WIRING DIAGRAM

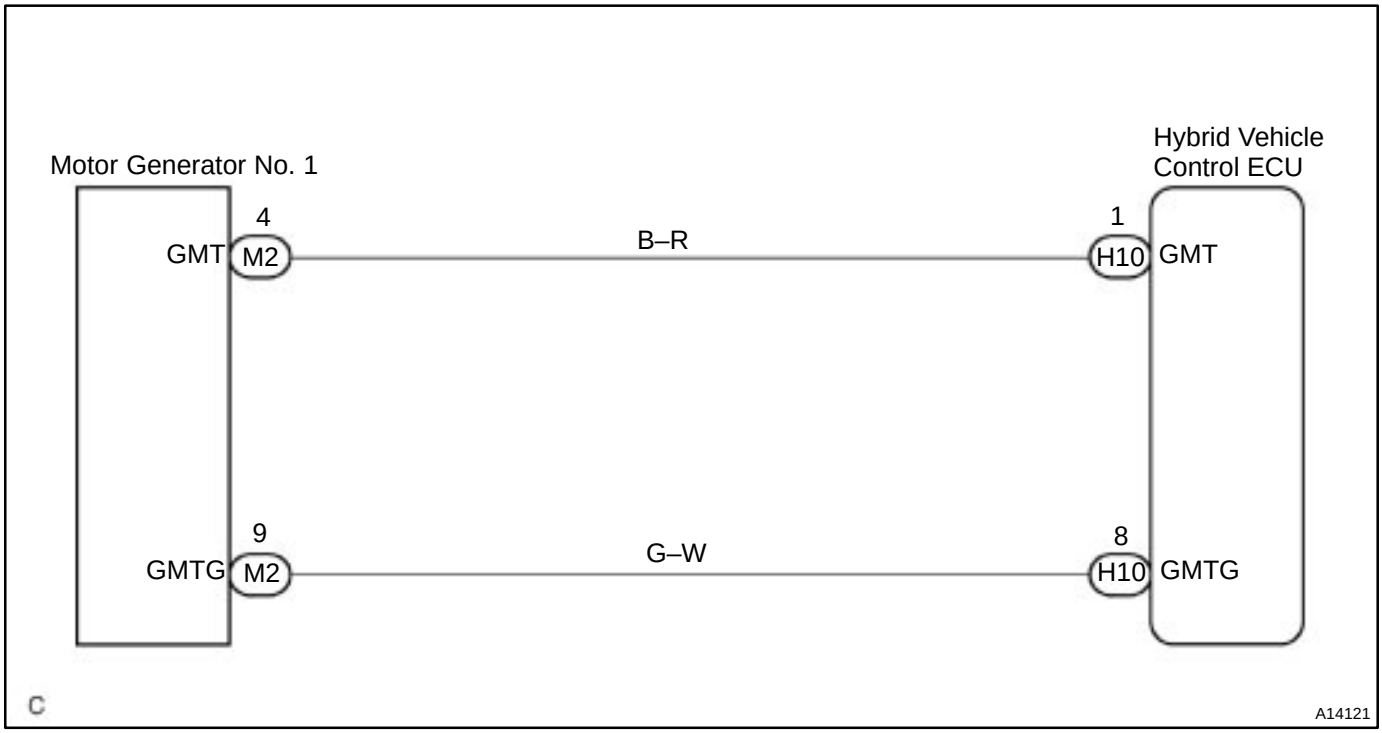

INSPECTION PROCEDURE

1	**Check for open, short and +B short in wire harness between HV transaxle generator temperature sensor GMT and GMTG terminals and HV ECU GMT and GMTG terminals (See page IN–41).**

HINT:
Confirm that there is no open circuit in the wire harness. If the voltage of the HV ECU GMT terminal is always more than 5V with the ignition ON, the generator temperature sensor circuit has +B short.

NG → **Repair or replace wire harness.**

OK

Check for open in generator temperature sensor and then replace HV transaxle generator. Check generator temperature sensor (See page HV–40).

CIRCUIT DESCRIPTION

DTC P3120 – Information code 258, 260

INF. Code.	Detecting Condition	Trouble Area
258	Generator temperature sensor malfunction	• HV transaxle (generator)
260	Generator temperature sensor performance problem	

INSPECTION PROCEDURE

If the information code 258 or 260 is output, replace the HV transaxle generator.

DI838–02

DTC	P3125	Converter & Inverter Assembly Malfunction

CIRCUIT DESCRIPTION

If driving the vehicle with the DCDC converter malfunctioning, the voltage of the auxiliary battery will drop, which will make it impossible to keep driving the vehicle. Therefore, HV ECU checks the operation of the DCDC converter and gives warning to the driver if malfunction is detected.

HINT:

- When using an OBD scan tool other than TOYOTA hand–held tester, check all the steps.
- When using TOYOTA hand–held tester, confirm the information code and check it.

DTC P3125 – Information code 263, 264, 265

INF. Code.	Detecting Condition	Trouble Area
263	+B short in DCDC converter NODD wiring	• Converter & inverter assembly • Wire harness
264	DCDC converter malfunction	
265	Open or GND short in DCDC converter NODD wiring	

WIRING DIAGRAM

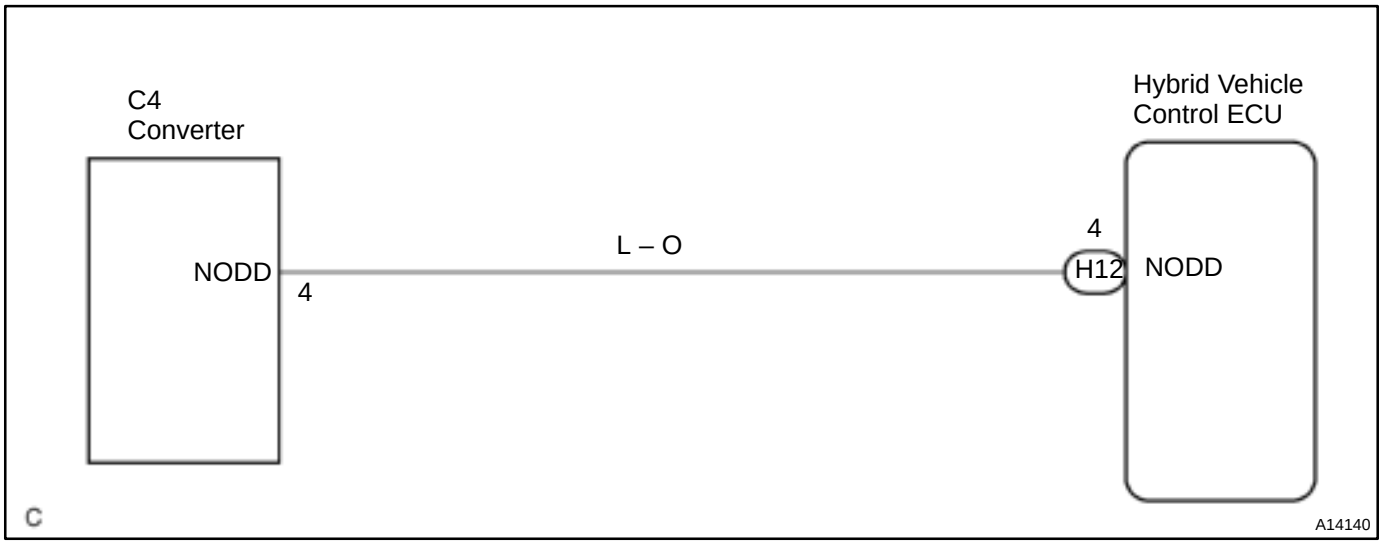

INSPECTION PROCEDURE

1	**Check for open, short and +B short in wire harness between HV ECU NODD terminal and converter & inverter NODD terminal (See page IN–41).**

HINT:
The converter has +B short if the battery voltage is always applied to the HV ECU NODD terminal with the ignition ON.

NG → **Repair or replace wire harness.**

OK

Replace converter & inverter assembly.

CIRCUIT DESCRIPTION

The HV ECU checks the inverter voltage and detects malfunction.

DTC P3125 – Information code 266, 267, 268, 269, 270

INF. Code.	Detecting Condition	Trouble Area
266	Open or GND short in inverter voltage signal circuit	• Converter & inverter assembly • Wire harness
267	+B short in inverter voltage signal circuit	
268	Inverter voltage signal is inconsistent with battery voltage	
269	Inverter voltage sensor malfunction	
270	Abnormality of line connection of inverter voltage signal circuit (when there is a history that the state of malfunction continued during inverter fail safe mode)	

WIRING DIAGRAM

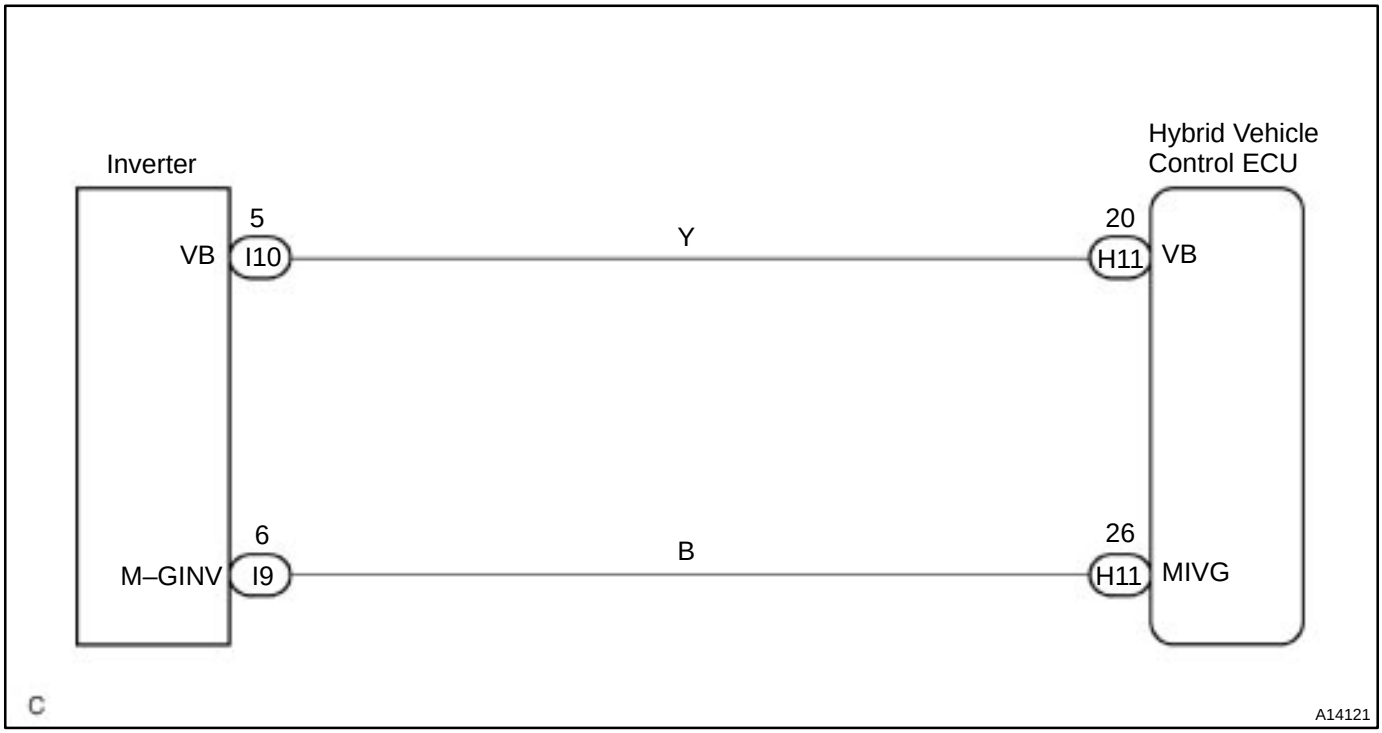

INSPECTION PROCEDURE

1	**Check for open, short and +B short in wire harness between HV ECU VB and MIVG terminals and converter & inverter assembly VB and M–GINV terminal (See page IN–41).**

HINT:
Confirm that there is no open circuit in the wire harness. If the voltage between the HV ECU VB or MIVG terminal and body ground is always more than 5V with the ignition ON, the inverter voltage signal circuit has +B short.

NG → **Repair or replace wire harness.**

OK

2	**Is there DTC P3100 being output?**

YES → **Check applicable DTC.**

NO

Replace converter & inverter assembly.

CIRCUIT DESCRIPTION

The HV ECU detects faulty line connection inside the inverter.

DTC P3125 – Information code 272

INF. Code.	Detecting Condition	Trouble Area
272	Abnormality of line connection of motor PWM (when there is a history that the state of malfunction continued during inverter fail safe mode)	• Wire harness • Converter & inverter assembly

WIRING DIAGRAM

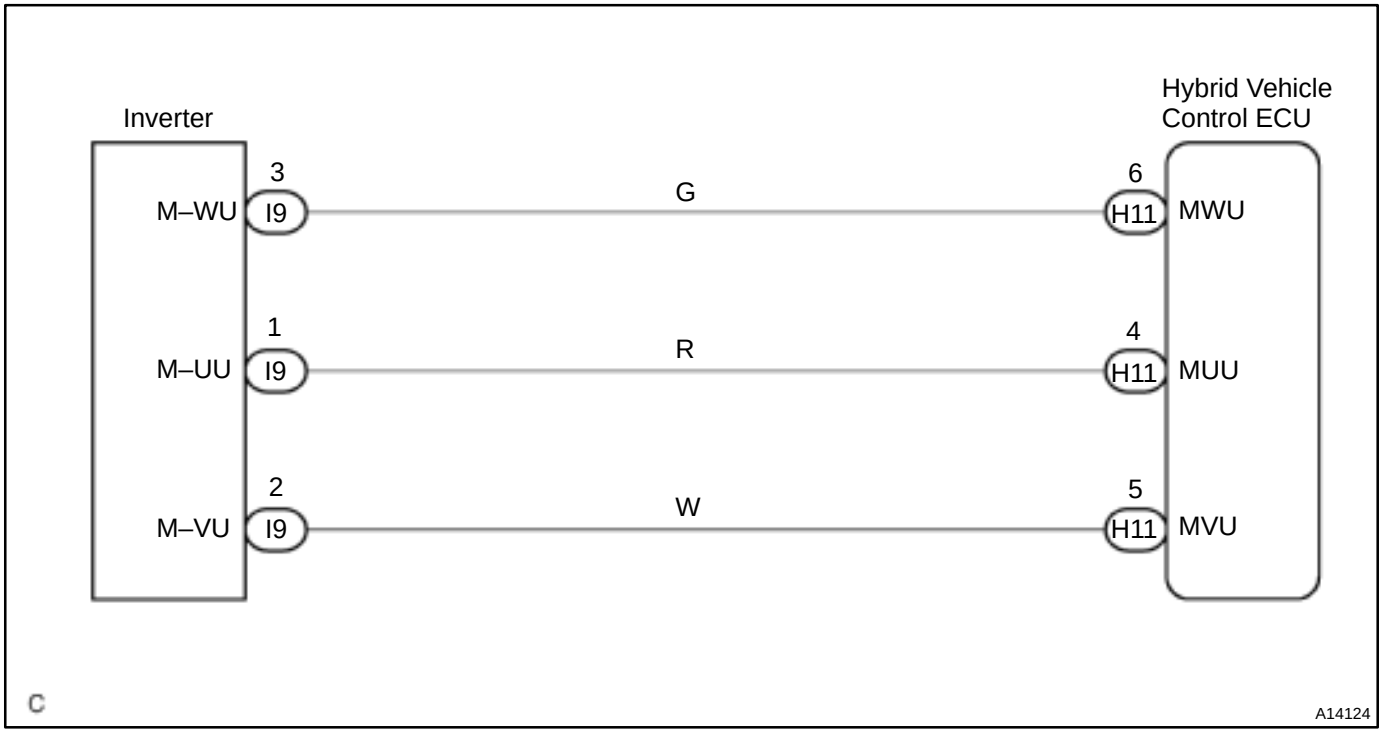

INSPECTION PROCEDURE

1	Check open and short in wire harness between HV ECU terminals (MUU, MVU, MWU) and inverter terminals.

NG → Repair or replace wire harness.

OK ↓

2	Is there DTC P3100 being output?

YES → Check applicable DTC.

NO ↓

Replace converter & inverter assembly.

CIRCUIT DESCRIPTION

The HV ECU detects faulty line connection inside the inverter.

DTC P3125 – Information code 273

INF. Code.	Detecting Condition	Trouble Area
273	Motor inverter malfunction	• Converter & inverter assembly • Wire harness

WIRING DIAGRAM

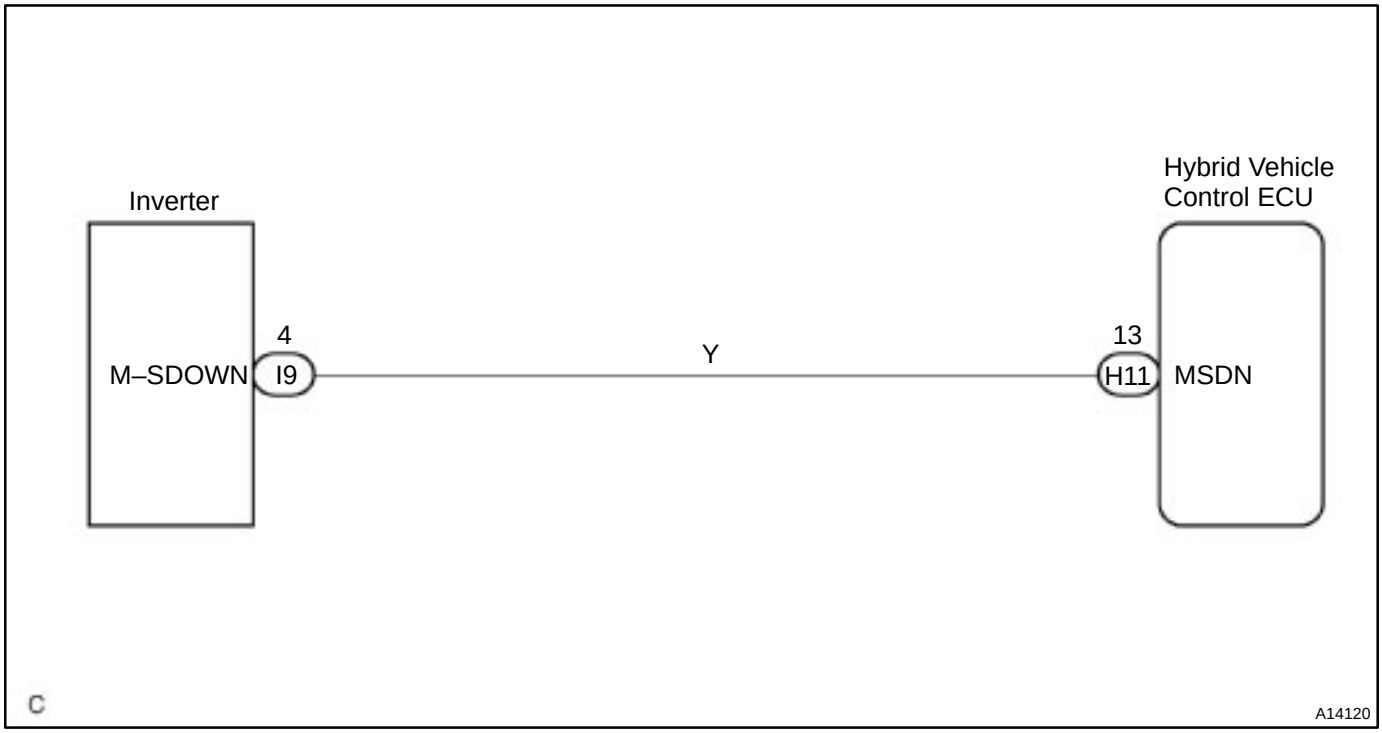

INSPECTION PROCEDURE

1	**Check for open and short in wire harness between HV ECU MSDN terminal and converter & inverter M–SDOWN terminal.**

NG → **Repair or replace wire harness.**

OK

Replace converter & inverter assembly.

CIRCUIT DESCRIPTION

The HV ECU checks the inverter temperature and controls the load limitation in order to prevent the inverter from overheating. Also, it detects the abnormality of the line connection of the inverter temperature sensor and the malfunction of the sensor itself.

DTC P3125 – Information code 274, 275, 276, 277

INF. Code.	Detecting Condition	Trouble Area
274	Open or +B short in motor inverter temperature sensor	• Converter & inverter assembly • Wire harness
275	GND short in motor inverter temperature sensor	
276	Motor inverter temperature sensor malfunction	
277	Motor inverter temperature sensor performance problem	

WIRING DIAGRAM

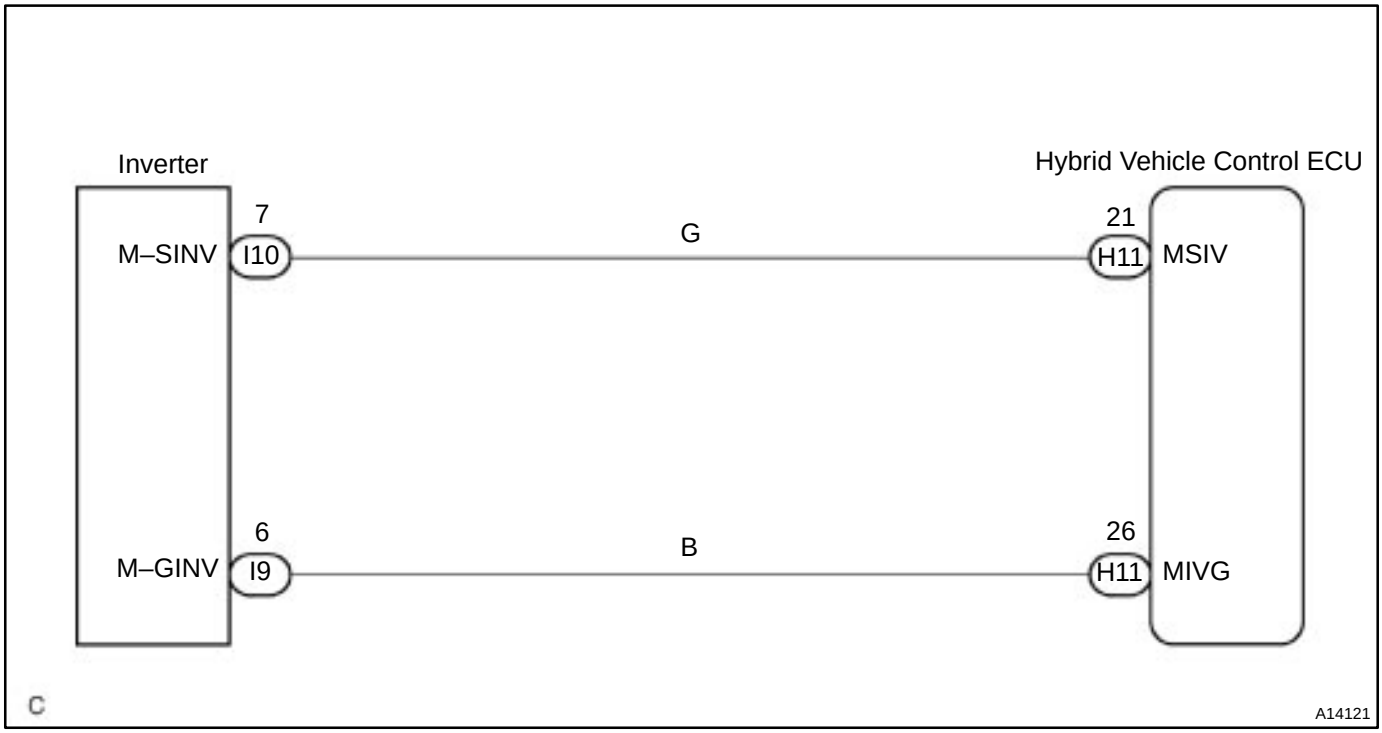

INSPECTION PROCEDURE

1	**Check for open, short and +B short in wire harness between HV ECU MIT and MIVG terminals and converter & inverter M–INVT, M–GINV terminals (See page IN–41).**

HINT:
Confirm that there is no open circuit in the wire harness. If the voltage between the HV ECU MIT or MIVG terminal and body ground is always more than 5V with the ignition ON, the motor inverter temperature sensor circuit has +B short.

NG → **Repair or replace wire harness.**

OK

Check for open in motor inverter temperature sensor and then replace converter & inverter assembly. Check motor inverter temperature sensor (See page HV–14).

CIRCUIT DESCRIPTION

The HV ECU checks the line connection of the motor inverter stop signal circuit and enters the fail safe mode (limited output driving) if malfunction is detected.

DTC P3125 – Information code 278, 280

INF. Code.	Detecting Condition	Trouble Area
278	+B short in motor inverter stop signal circuit	• Converter & inverter assembly • Wire harness
280	Open or GND short in motor inverter stop signal circuit	

WIRING DIAGRAM

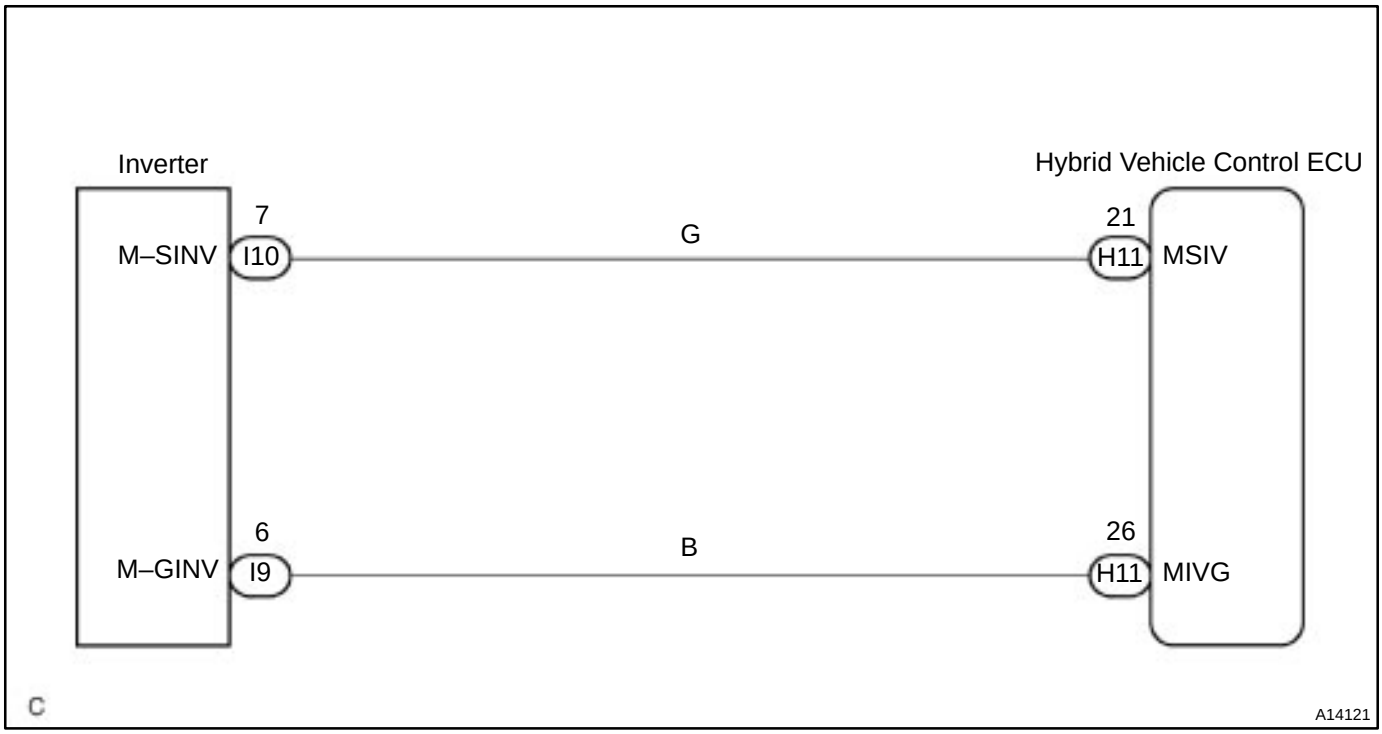

INSPECTION PROCEDURE

1	**Check for open, short and +B short in wire harness between HV ECU MSIV and MIVG terminals and converter & inverter assembly M–SINV and M–GIVN terminals (See page IN–41).**

HINT:

The motor inverter stop signal circuit has +B short if the voltage between the HV ECU MSIV or MIGV terminal and body ground is always more than 13 V with the ignition ON (”READY” light OFF).

NG → **Repair or replace wire harness.**

OK

Replace converter & inverter assembly.

CIRCUIT DESCRIPTION

DTC P3125 – Information code 279, 281, 282

INF. Code.	Detecting Condition	Trouble Area
279	Over voltage of inverter	• Converter & inverter assembly
281	Voltage drop of inverter power source	
282	Inverter circuit broken	

INSPECTION PROCEDURE

If the information code 279 or 281 is output, check if other DTC or information codes are recorded. If they are recorded, check and repair those codes first.
If the information code 279 or 281 alone is recorded, replace the converter & inverter assembly.
If the information code 282 is output, replace the converter & inverter assembly.

CIRCUIT DESCRIPTION

The HV ECU checks the line connection of the motor inverter fail signal circuit and detects malfunction.

DTC P3125 – Information code 283, 285

INF. Code.	Detecting Condition	Trouble Area
283	+B short in motor inverter fail signal circuit	• Converter & inverter assembly • Wire harness
285	Open or GND short in motor inverter fail signal circuit	

WIRING DIAGRAM

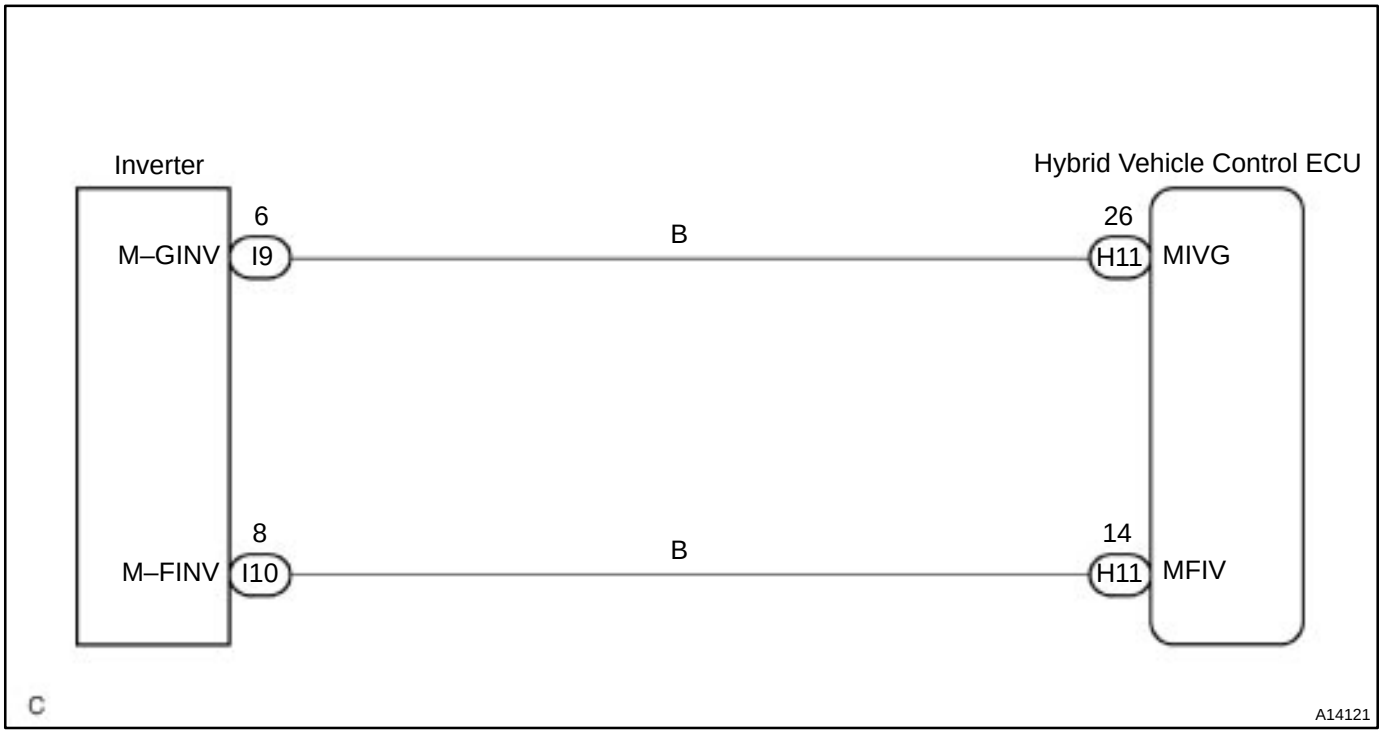

INSPECTION PROCEDURE

1	**Check for open, short and +B short in wire harness between HV ECU MFIV and MIVG terminals and converter & inverter assembly M–FINV and M–GINV terminals (See page IN–41).**

HINT:

The motor inverter fail signal circuit has +B short if the voltage between the HV ECU MIVG or MFIV terminal and body ground is always more than 13 V with the ignition ON (”READY” light OFF).

NG → **Repair or replace wire harness.**

OK

Replace converter & inverter assembly.

CIRCUIT DESCRIPTION

DTC P3125 – Information code 284, 286, 287

INF. Code.	Detecting Condition	Trouble Area
284	Inverter overheating	• Converter & inverter assembly
286	Inverter circuit broken	
287	Inverter internal short	

INSPECTION PROCEDURE

If the information code 284 or 287 is output, check if other DTC or information codes are recorded. If they are recorded, check and repair those codes first.
If the information code 284 or 287 alone is recorded, replace the converter & inverter assembly.
If the information code 286 is output, replace the converter & inverter assembly.

CIRCUIT DESCRIPTION

The HV ECU detects the malfunction of the motor inverter current sensor. It detects the malfunction of the sensor system, not of the high voltage system.

DTC P3125 – Information code 288, 289, 290, 292, 294, 296, 297, 298, 300, 302,

INF. Code.	Detecting Condition	Trouble Area
289	Open in motor inverter current sensor (V phase sub sensor)	• Converter & inverter assembly • Wire harness
292	Open in motor inverter current sensor (V phase main sensor)	
297	Open in motor inverter current sensor (W phase sub sensor)	
300	Open in motor inverter current sensor (W phase main sensor)	
288	Motor inverter current sensor malfunction (V phase sub sensor)	
290	Motor inverter current sensor malfunction (V phase main sensor)	
294	Motor inverter current sensor V phase performance problem	
296	Motor inverter current sensor malfunction (W phase sub sensor)	
298	Motor inverter current sensor malfunction (W phase main sensor)	
302	Motor inverter current sensor W phase performance problem	

WIRING DIAGRAM

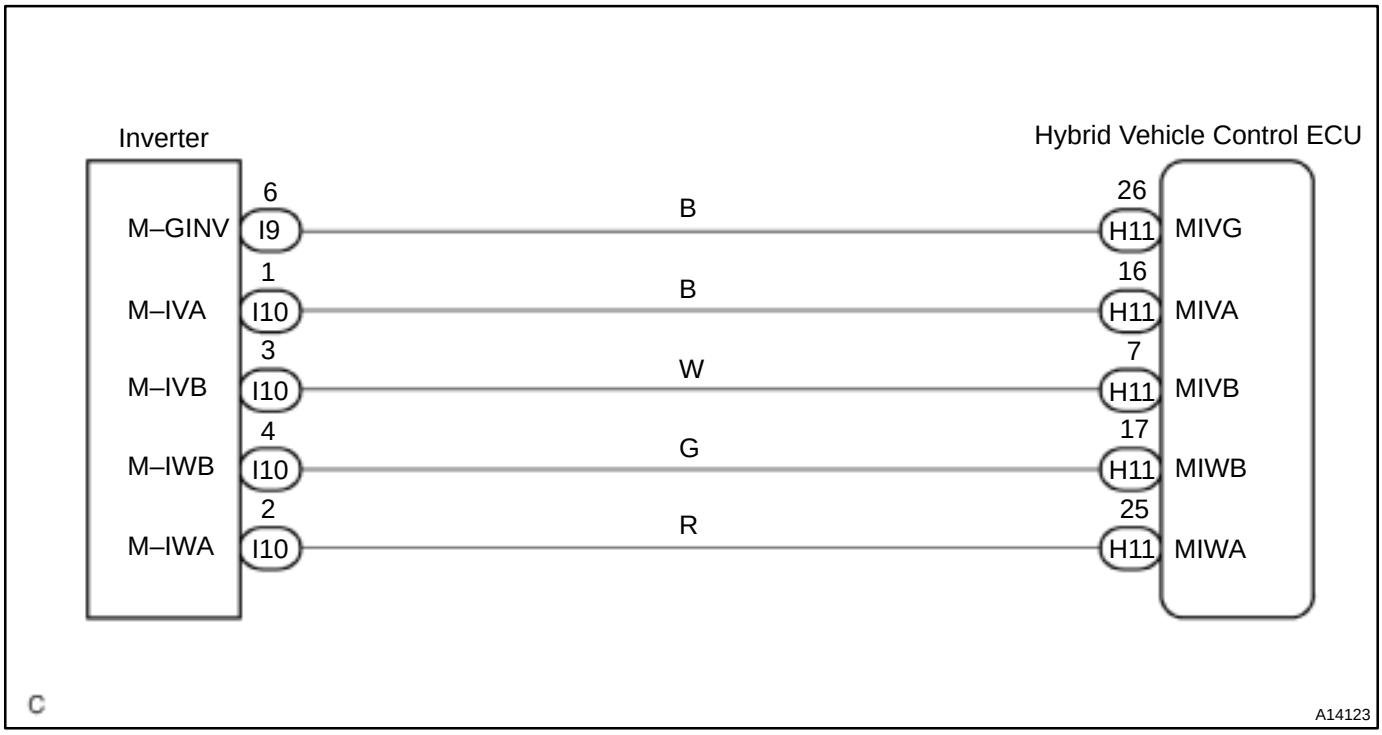

INSPECTION PROCEDURE

1	**Check continuity of wire harness between HV ECU and converter & inverter assembly (See page IN–41).**

OK:

Continuity: Less then 1 Ω

HV ECU Terminals	Inverter Terminals
MIVA	M–IVA
MIVB	M–IVB
MIWA	M–IWA
MIWB	M–IWB
MIVG	M–GINV

NG → **Repair or replace wire harness.**

OK

Replace converter & inverter assembly.

CIRCUIT DESCRIPTION

The HV ECU detects the malfunction of the motor inverter current sensor. It detects the malfunction of the sensor system, not of the high voltage system.

DTC P3125 – Information code 291, 293, 295, 299, 301, 303

INF. Code.	Detecting Condition	Trouble Area
291	When there is a history that the state of malfunction continued during inverter fail safe mode.	• Converter & inverter assembly • Wire harness
293		
295		
299		
301		
303		

WIRING DIAGRAM

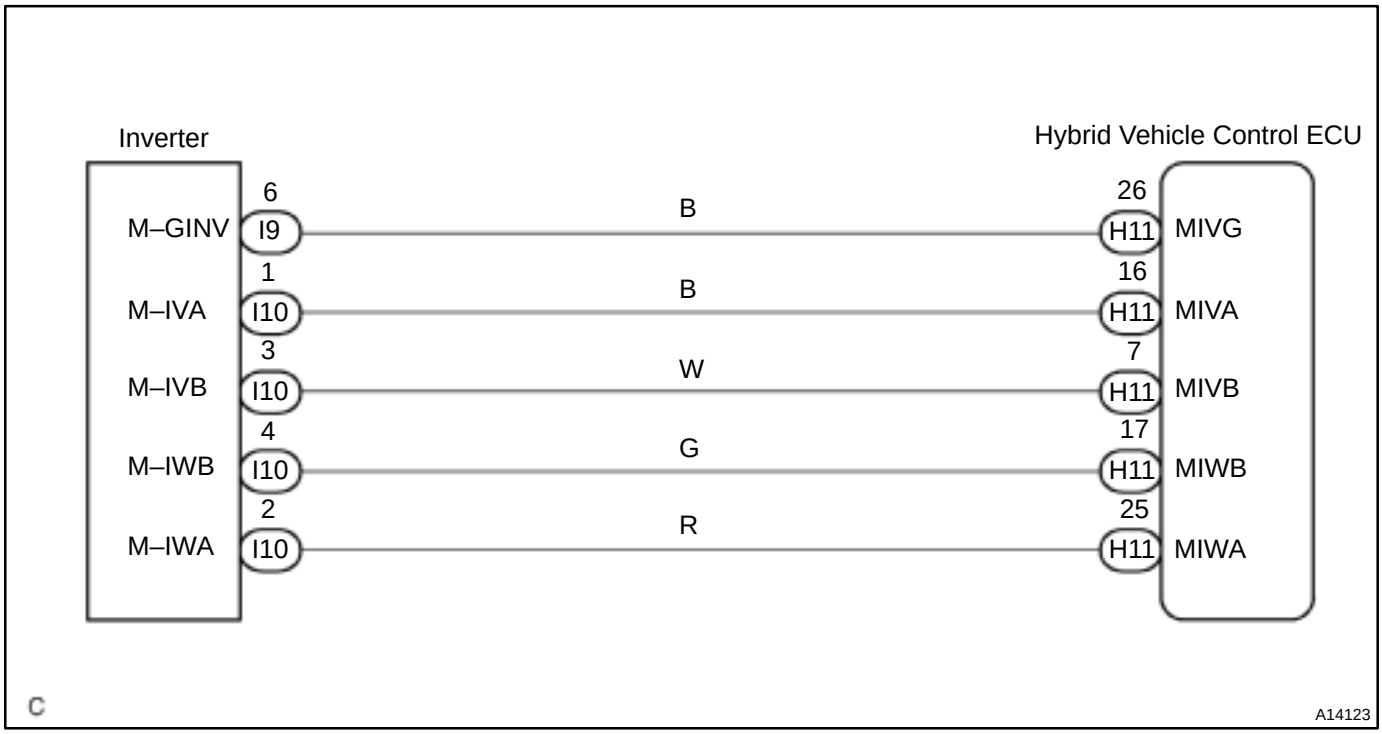

INSPECTION PROCEDURE

1	**Check continuity of wire harness between HV ECU and converter & inverter assembly (See page IN–41).**

OK:

Continuity: Less then 1 Ω

HV ECU Terminals	Inverter Terminals
MIVA	M–IVA
MIVB	M–IVB
MIWA	M–IWA
MIWB	M–IWB
MIVG	M–GINV

NG → **Repair or replace wire harness.**

OK

2	**Is there DTC P3100 being output?**

YES → **Check applicable DTC.**

NO

Replace converter & inverter assembly.

CIRCUIT DESCRIPTION

The HV ECU detects the malfunction of the motor inverter current sensor. It detects the malfunction of the sensor system, not of the high voltage system.

DTC P3125 – Information code 306, 307

INF. Code.	Detecting Condition	Trouble Area
306	Failure in monitoring motor torque performance	• Converter & inverter assembly
307	Abnormal current value of motor	

INSPECTION PROCEDURE

If the information code 306 or 307 is output, check if other DTC or information codes are recorded. If they are recorded, check and repair those codes first.

If the information code 306 or 307 alone is recorded, replace the converter & inverter assembly.

CIRCUIT DESCRIPTION

If the HV ECU detects the collision signal from the airbag or inverter, the HV ECU recognizes it as the destruction of the vehicle and then shuts down the high voltage system to ensure safety.

DTC P3125 – Information code 308

INF. Code.	Detecting Condition	Trouble Area
308	Input of collision signal from airbag or inverter	–

HINT:

When the vehicle collision occurs and the airbag is deployed, this information code will be recorded and the high voltage system will be shut down.

CIRCUIT DESCRIPTION

The HV ECU checks the line connection of the motor gate shutdown signal circuit and detects malfunction.

DTC P3125 – Information code 304, 305

INF. Code.	Detecting Condition	Trouble Area
304	+B short in motor gate shutdown signal circuit	• Converter & inverter assembly • Wire harness
305	Open or GND short in motor gate shutdown signal circuit	

WIRING DIAGRAM

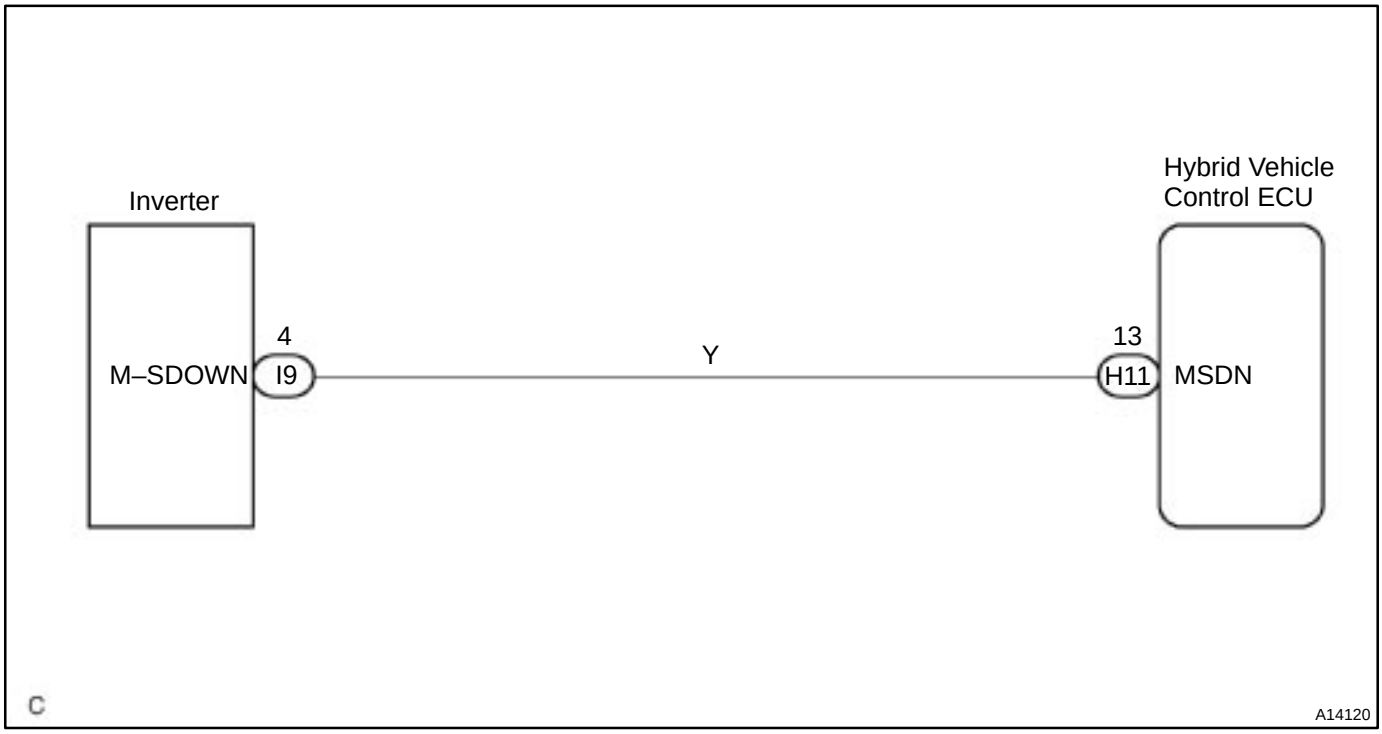

INSPECTION PROCEDURE

1	**Check for open, short and +B short in wire harness between HV ECU MSDN terminal and converter & inverter assembly M–SDOWN terminals (See page IN–41).**

HINT:
Confirm that there is no open circuit in the wire harness. The motor gate shutdown signal circuit has +B short if the battery voltage is always applied to the HV ECU MSDN terminal with the ignition ON.

NG → **Repair or replace wire harness.**

OK

Replace converter & inverter assembly.

CIRCUIT DESCRIPTION

The HV ECU detects faulty line connection inside the inverter.

DTC P3125 – Information code 309

INF. Code.	Detecting Condition	Trouble Area
309	Open or short in generator inverter switching wiring (GUU, GVU, GWU)	• Wire harness • Converter & inverter assembly

WIRING DIAGRAM

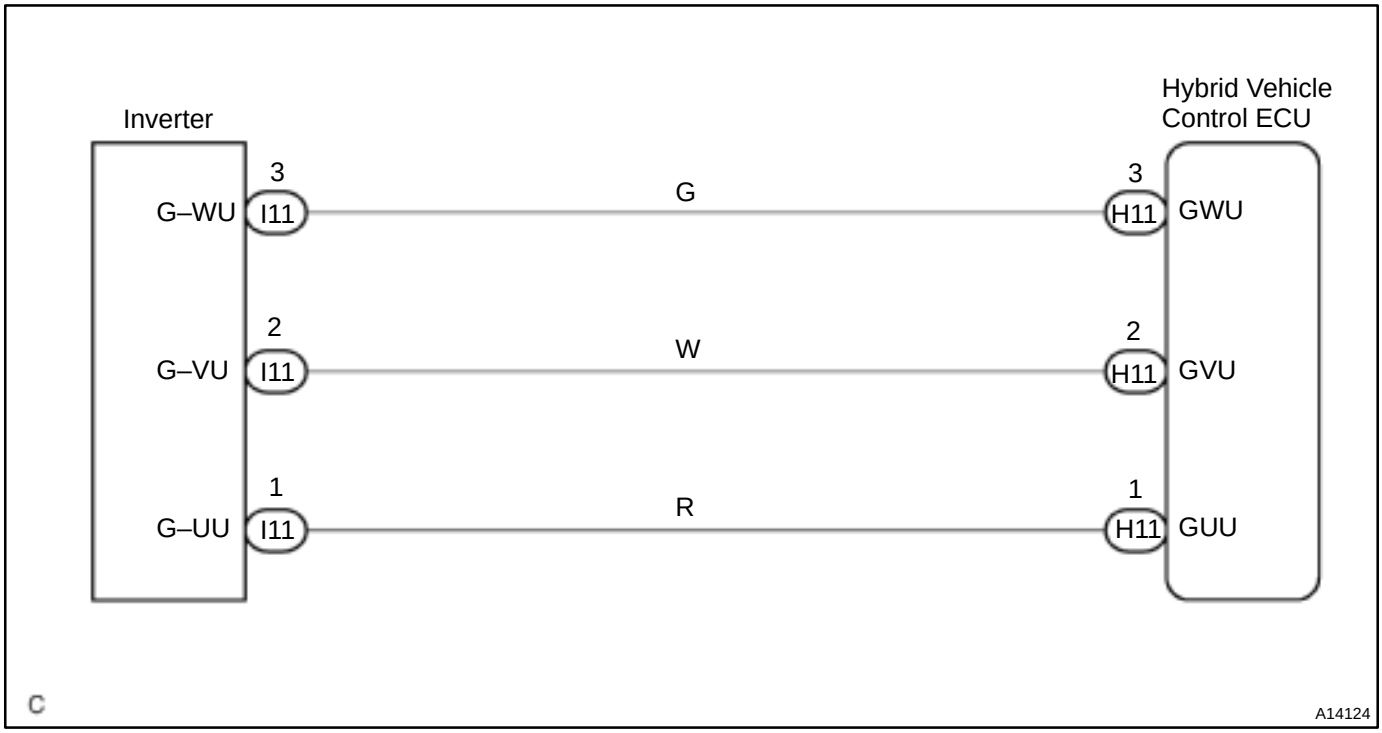

INSPECTION PROCEDURE

1	Check for open and short in wire harness between HV ECU terminals (GUU, GVU, GWU) and inverter terminals.

NG → Repair or replace wire harness.

OK ↓

2	Is there DTC P3100 being output?

YES → Check applicable DTC.

NO ↓

Replace converter & inverter assembly.

CIRCUIT DESCRIPTION

The HV ECU detects faulty line connection inside the inverter.

DTC P3125 – Information code 311

INF. Code.	Detecting Condition	Trouble Area
311	Generator inverter malfunction	• Converter & inverter assembly • Wire harness

WIRING DIAGRAM

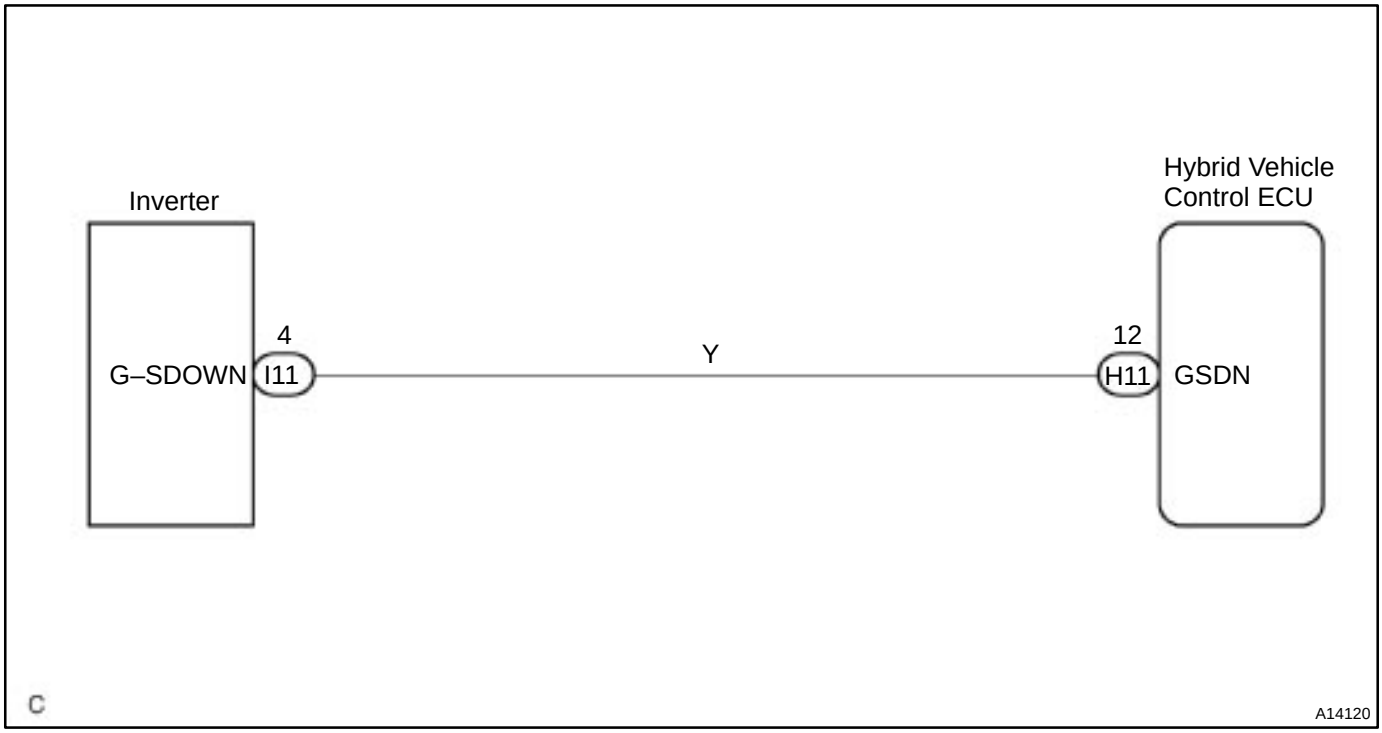

INSPECTION PROCEDURE

1	**Check for open and short in wire harness between HV ECU GSDN terminal and converter & inverter S–DOWN terminal.**

NG → **Repair or replace wire harness.**

OK

Replace converter & inverter assembly.

CIRCUIT DESCRIPTION

The HV ECU checks the generator temperature and controls the load limitation in order to prevent the generator from overheating. Also, it detects the abnormality of the line connection of the generator temperature sensor and the malfunction of the sensor itself.

DTC P3125 – Information code 312, 313, 314, 315

INF. Code.	Detecting Condition	Trouble Area
312	Open or +B short in generator inverter temperature sensor	• Converter & inverter assembly • Wire harness
313	GND short in generator inverter temperature sensor	
314	Generator inverter temperature sensor malfunction	
315	Generator inverter temperature sensor performance problem	

WIRING DIAGRAM

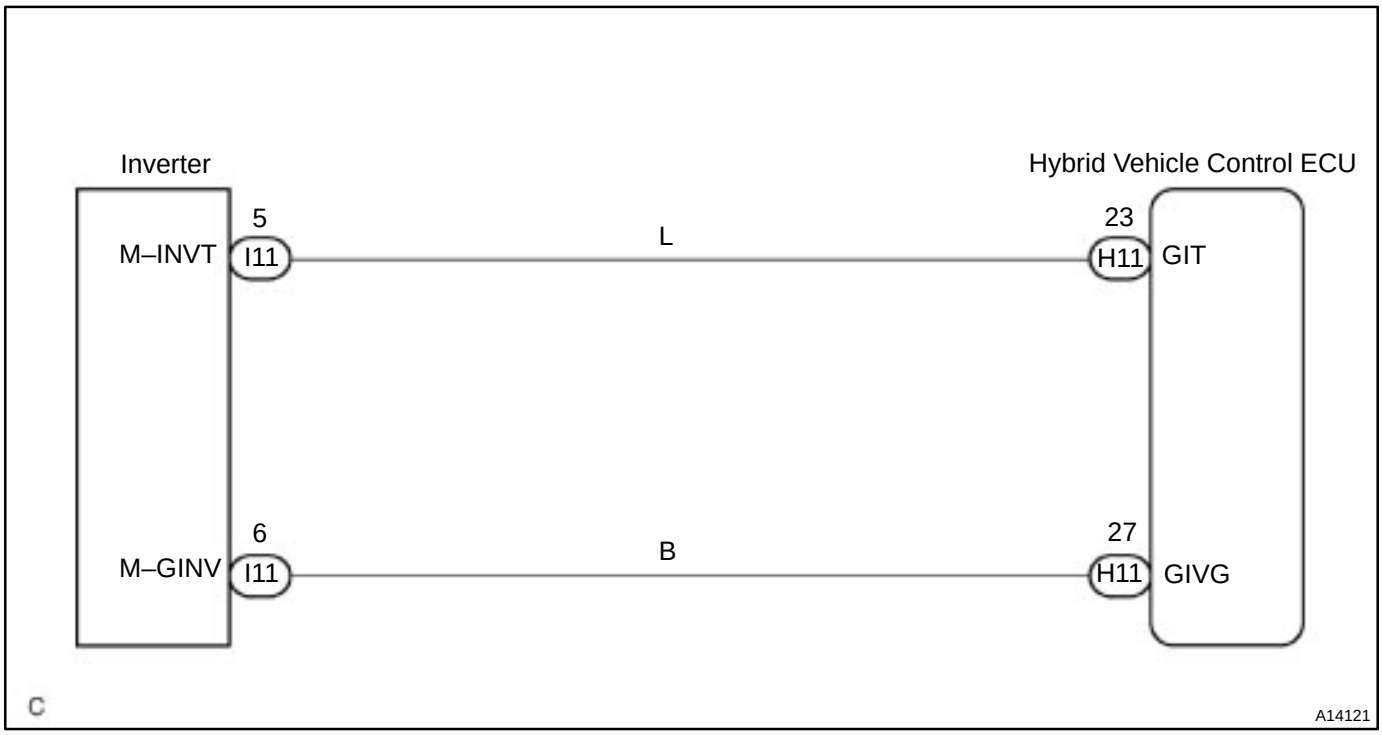

INSPECTION PROCEDURE

1	**Check for open, short and +B short in wire harness between HV ECU GIT and GIVG terminals and converter & inverter G–GINV or G–GINV terminals (See page IN–41).**

HINT:
Confirm that there is no open circuit in the wire harness. The generator inverter temperature sensor circuit has +B short if the voltage between the HV ECU GIT or GIVG terminal and body ground is always more than 5V with the ignition ON.

NG → **Repair or replace wire harness.**

OK

Check for open in generator inverter temperature sensor and then replace converter & inverter assembly. Check generator inverter temperature sensor (See page HV–14).

CIRCUIT DESCRIPTION

The HV ECU checks the line connection of the generator inverter stop signal circuit and enters the fail safe mode (limited driving) if malfunction is detected.

DTC P3125 – Information code 316, 318

INF. Code.	Detecting Condition	Trouble Area
316	+B short in generator inverter stop signal circuit	• Converter & inverter assembly • Wire harness
318	Open or GND short in generator inverter stop signal circuit	

WIRING DIAGRAM

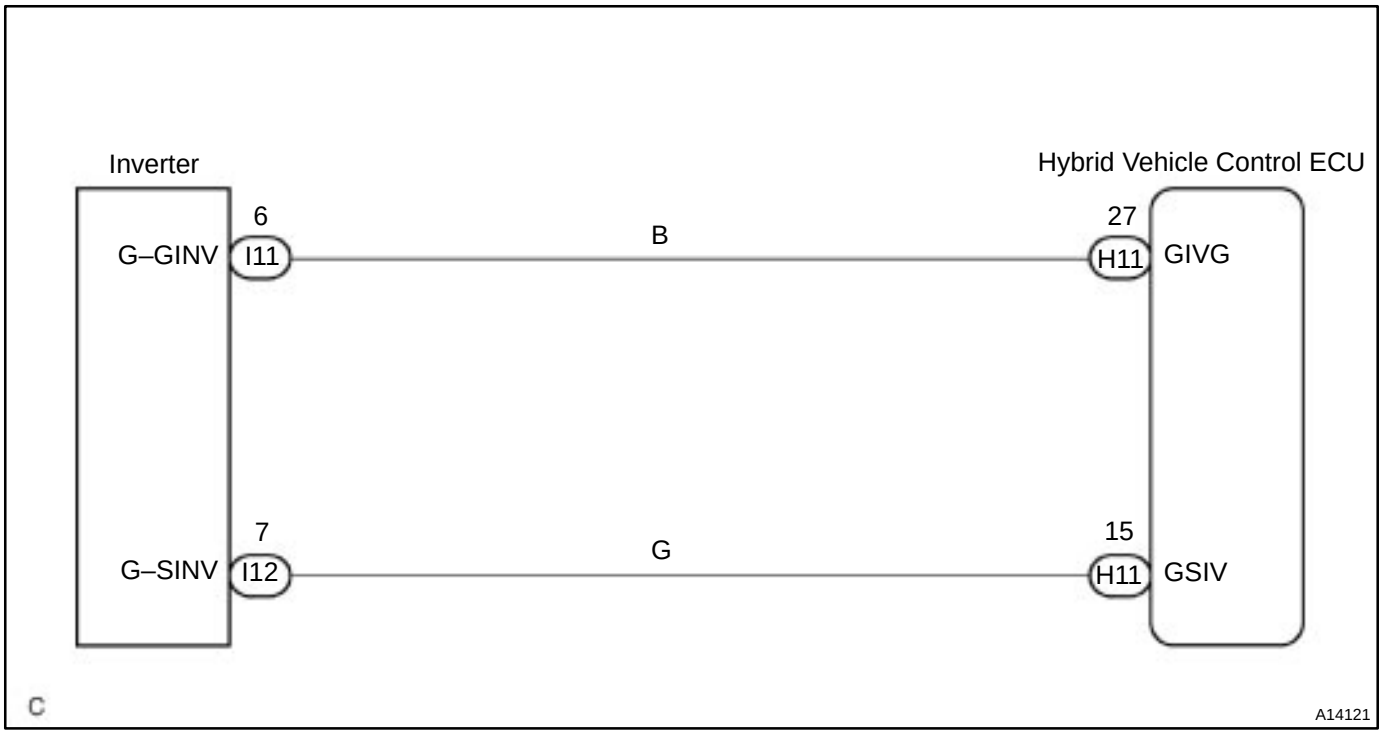

INSPECTION PROCEDURE

1	**Check for open, short and +B short in wire harness between HV ECU GSIV and GIVG terminals and converter & inverter assembly G–SINV and G–GINV terminals (See page IN–41).**

HINT:
The generator inverter stop signal circuit has +B short if the voltage between the HV ECU GSIV or GIVG terminal and body ground is always more than 13 V with the ignition ON (”READY” light OFF).

NG → **Repair or replace wire harness.**

OK

Replace converter & inverter assembly.

CIRCUIT DESCRIPTION

DTC P3125 – Information code 317, 319, 320

INF. Code.	Detecting Condition	Trouble Area
317	Over voltage of inverter	• Converter & inverter assembly
319	Voltage drop of inverter power source	
320	Inverter circuit broken	

INSPECTION PROCEDURE

If the information code 317 or 319 is output, check if other information codes are recorded. If they are recorded, check and repair those codes first.
If the information code 317 or 319 alone is recorded, replace the converter & inverter assembly.
If the information code 320 is output, replace the converter & inverter assembly.

CIRCUIT DESCRIPTION

The HV ECU checks the line connection of the generator inverter fail signal circuit and detects malfunction.

DTC P3125 – Information code 321, 323

INF. Code.	Detecting Condition	Trouble Area
321	+B short in generator inverter fail signal circuit	• Converter & inverter assembly • Wire harness
323	Open or GND short in generator inverter fail signal circuit	

WIRING DIAGRAM



INSPECTION PROCEDURE

1	**Check for open, short and +B short in wire harness between HV ECU GFIV and GIVG terminals and converter & inverter assembly G–FINV and G–GINV terminals (See page IN–41).**

HINT:
The generator inverter fail signal circuit has +B short if the voltage between the HV ECU GFIV or GIVG terminal and body ground is always more than 13 V with the ignition ON (”READY” light OFF).

NG → **Repair or replace wire harness.**

OK

Replace converter & inverter assembly.

CIRCUIT DESCRIPTION

DTC P3125 – Information code 322, 324, 325

INF. Code.	Detecting Condition	Trouble Area
322	Inverter overheating	• Converter & inverter assembly
324	Inverter circuit broken	
325	Inverter internal short	

INSPECTION PROCEDURE

If the information code 322 or 325 is output, check if other information codes are recorded. If they are recorded, check and repair those codes first.
If the information code 322 or 325 alone is recorded, replace the converter & inverter assembly.
If the information code 324 is output, replace the converter & inverter assembly.

CIRCUIT DESCRIPTION

The HV ECU detects the malfunction of the generator inverter current sensor. It detects the malfunction of the sensor system, not of the high voltage system.

DTC P3125 – Information code 326, 327, 328, 330, 332, 334, 335, 336, 338, 340

INF. Code.	Detecting Condition	Trouble Area
327	Open in generator inverter current sensor (V phase sub sensor)	• Converter & inverter assembly • Wire harness
330	Open in generator inverter current sensor (V phase main sensor)	
335	Open in generator inverter current sensor (W phase sub sensor)	
338	Open in generator inverter current sensor (W phase main sensor)	
326	Generator inverter current sensor malfunction (V phase sub sensor)	
328	Generator inverter current sensor malfunction (V phase main sensor)	
332	Generator inverter current sensor V phase performance problem	
334	Generator inverter current sensor malfunction (W phase sub sensor)	
336	Generator inverter current sensor malfunction (W phase main sensor)	
340	Generator inverter current sensor W phase performance problem	

WIRING DIAGRAM

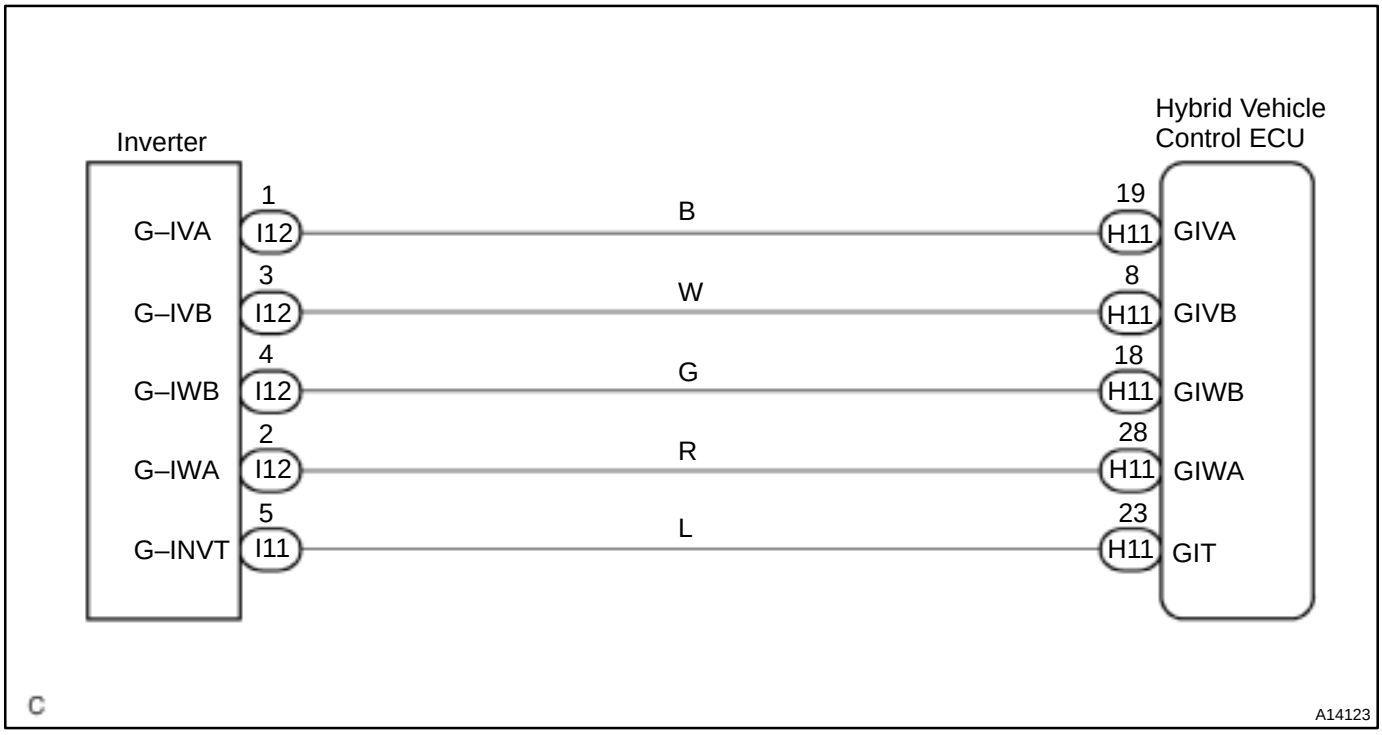

INSPECTION PROCEDURE

1	**Check continuity of wire harness between HV ECU and converter & inverter assembly (See page IN–41).**

OK:

Continuity: Less then 1 Ω

HV ECU Terminals	Inverter Terminals
GIVA	G–IVA
GIVB	G–IVB
GIWA	G–IWA
GIWB	G–IWB
GIVG	G–GINV

NG → **Repair or replace wire harness.**

OK

Replace converter & inverter assembly.

CIRCUIT DESCRIPTION

The HV ECU detects the malfunction of the generator inverter current sensor. It detects the malfunction of the sensor system, not of the high voltage system.

DTC P3125 – Information code 329, 331, 333, 337, 339, 341

INF. Code.	Detecting Condition	Trouble Area
329	When there is a history that the state of malfunction continued during inverter fail safe mode	• Converter & inverter assembly • Wire harness
331		
333		
337		
339		
341		

WIRING DIAGRAM

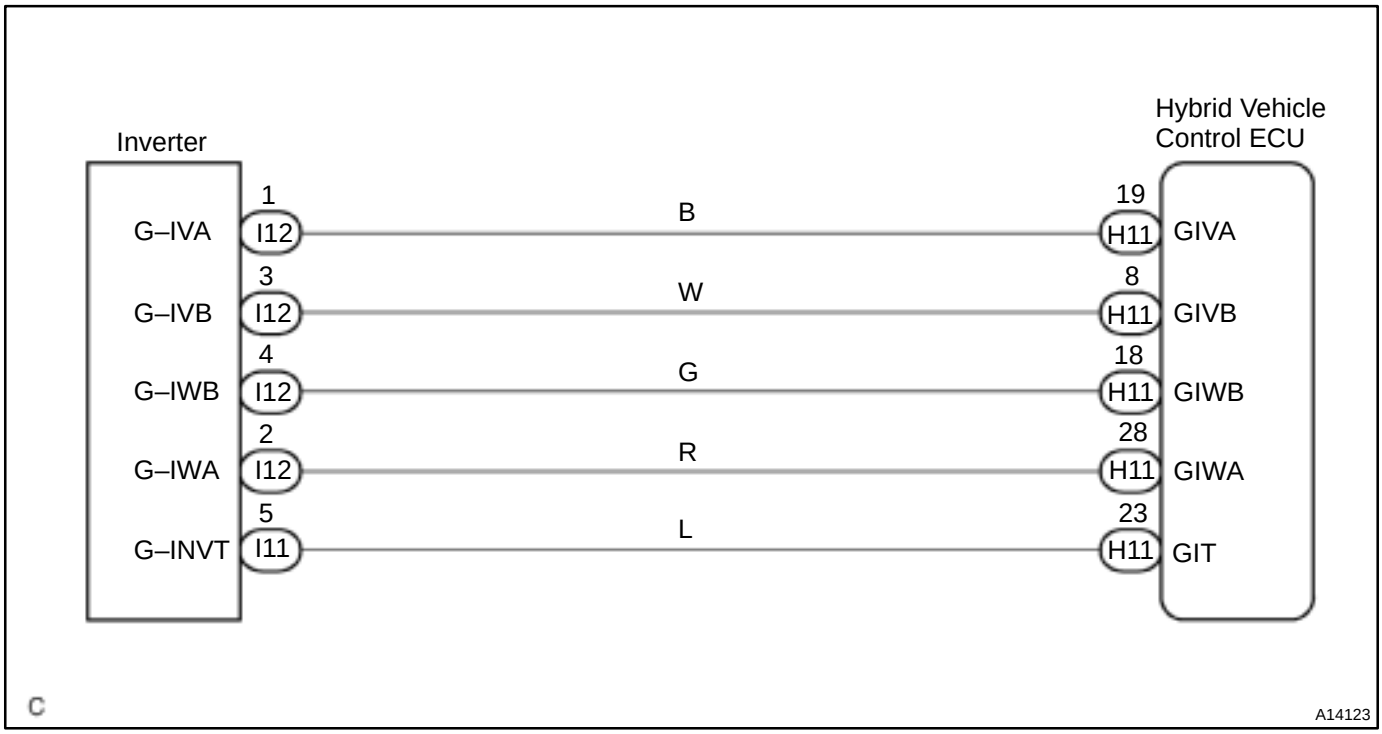

INSPECTION PROCEDURE

1	**Check continuity of wire harness between HV ECU and converter & inverter assembly (See page IN–41).**

OK:

Continuity: Less then 1 Ω

HV ECU Terminals	Inverter Terminals
GIVA	G–IVA
GIVB	G–IVB
GIWA	G–IWA
GIWB	G–IWB
GIVG	G–GINV

NG → **Repair or replace wire harness.**

OK

2	**Is there DTC P3100 being output?**

YES → **Check applicable DTC.**

NO

Replace converter & inverter assembly.

CIRCUIT DESCRIPTION

The HV ECU detects the malfunction of the generator inverter current sensor. It detects the malfunction of the sensor system, not of the high voltage system.

DTC P3125 – Information code 344, 345

INF. Code.	Detecting Condition	Trouble Area
344	Failure in monitoring generator torque performance	• Converter & inverter assembly
345	Abnormal current value of generator	

INSPECTION PROCEDURE

If the information code 344 or 345 is output, check if other DTC or information codes are recorded. If they are recorded, check and repair those codes first.

If the information code 344 or 345 alone is recorded, replace the converter & inverter assembly.

CIRCUIT DESCRIPTION

The HV ECU checks the line connection of the generator gate shutdown signal circuit and detects malfunction.

DTC P3125 – Information code 342, 343

INF. Code.	Detecting Condition	Trouble Area
342	+B short in generator gate shutdown signal circuit	• Converter & inverter assembly • Wire harness
343	Open or GND short in generator gate shutdown signal circuit	

WIRING DIAGRAM

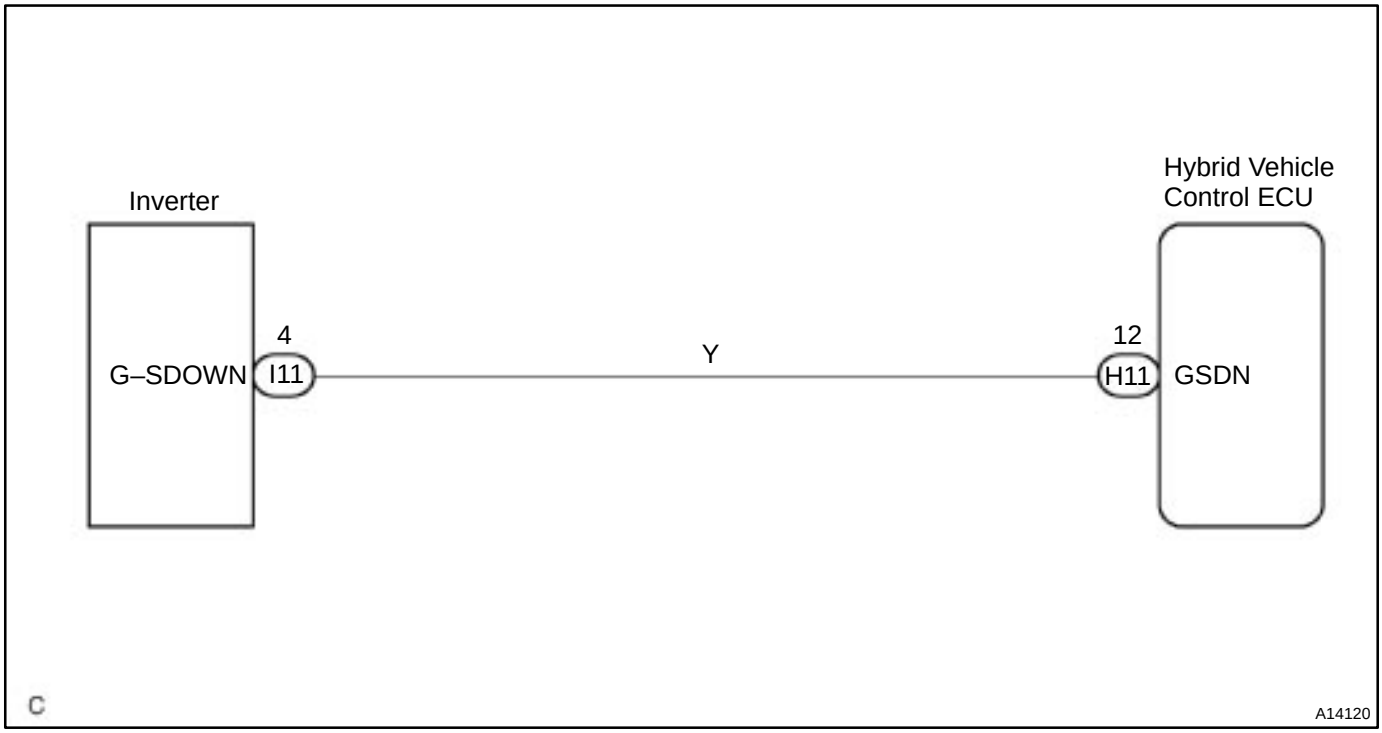

INSPECTION PROCEDURE

1	**Check for open, short and +B short in wire harness between HV ECU GSDN terminal and converter & inverter assembly G–SDOWN terminals (See page IN–41).**

HINT:
Confirm that there is no open circuit in the wire harness. The generator gate shutdown signal circuit has +B short if the battery voltage is always applied to the HV ECU GSDN terminal with the ignition ON.

NG → **Repair or replace wire harness.**

OK

Replace converter & inverter assembly.

DI839–02

DTC	P3130	Inverter Cooling System Malfunction

CIRCUIT DESCRIPTION

The HV ECU checks the operation of the inverter water pump and detects malfunction.

HINT:

- When using an OBD scan tool other than TOYOTA hand–held tester, check all the steps.
- When using TOYOTA hand–held tester, confirm the information code and check it.

DTC P3130 – Information code 346

INF. code.	Detecting Condition	Trouble Area
346	Water pump system malfunction	• Inverter water pump • IG2 relay • Wire harness

WIRING DIAGRAM

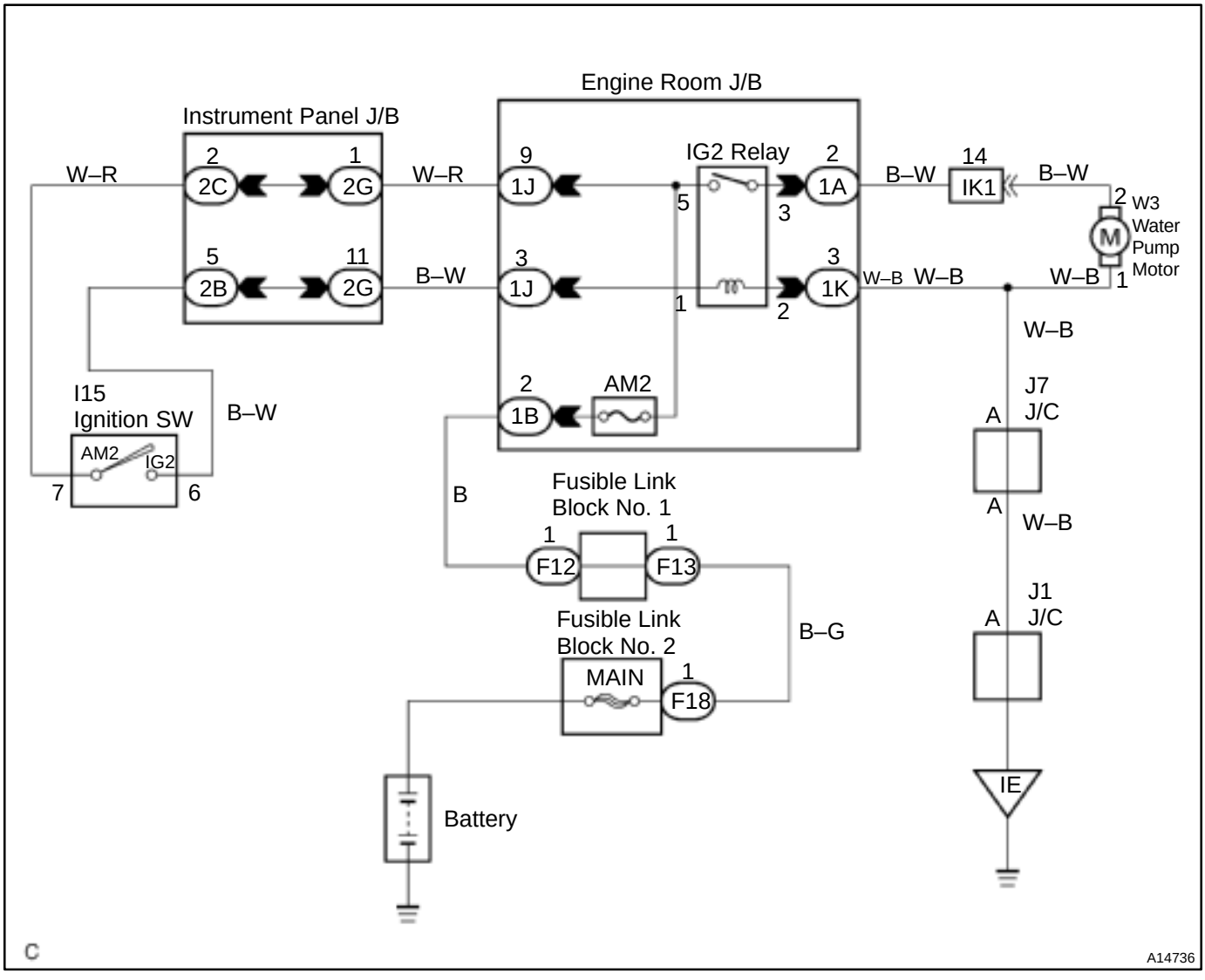

INSPECTION PROCEDURE

1	**Check wire harness (See page IN–41).**

HINT:

After removing the IG2 relay, check the electrical condition of each terminal.

- No. 1 terminal: With the IG switch ON, 10 – 14 V
- No. 2 terminal : Continuity between the IG2 relay No. 2 terminal and body ground (less than 1 Ω)
- No. 3 terminal: Continuity between the IG2 relay No. 3 terminal and water pump No. 2 terminal (less than 1 Ω)
- No. 5 terminal: Always 10 – 14 V

Continuity between the water pump No. 1 terminal and body ground (less than 1 Ω)

NG → **Repair or replace wire harness.**

OK

2	Check IG2 relay.

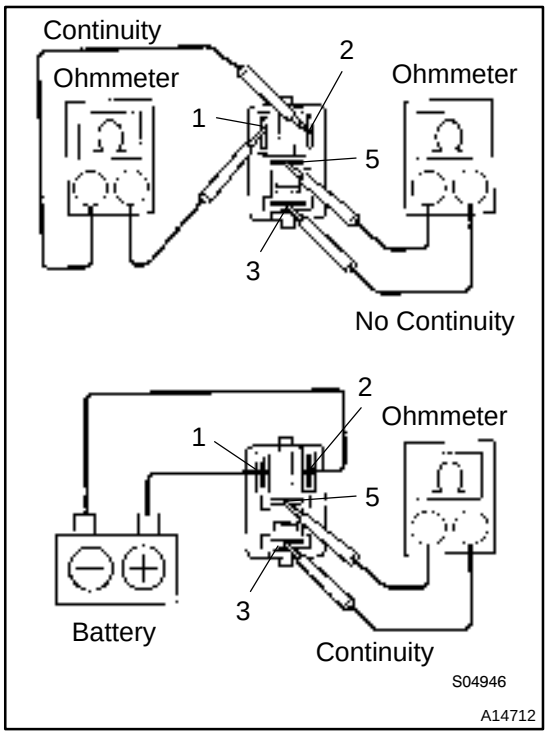

PREPARATION:

Remove the IG2 relay from the engine room J/B.

CHECK:

(a) Using an ohmmeter, check that there is continuity between terminals 1 and 2.

(b) Check that there is no continuity between terminals 3 and 5.

(c) Apply battery voltage across terminals 1 and 2. Using an ohmmeter, check that there is continuity between terminals 3 and 5.

OK:

(a) Continuity
(b) No continuity
(c) Continuity

NG	Replace IG2 relay.

OK

Confirm that water pump is defective and then replace it.
Check water pump (See page HV–26).

CIRCUIT DESCRIPTION

DTC P3130 – Information code 347

INF. code.	Detecting Condition	Trouble Area
347	Electric cooling fan system malfunction	• Electric cooling fan system

INSPECTION PROCEDURE

If this information code is output, check the electric cooling fan system (See page CO–20).

DI83A–02

DTC	P3135	Circuit Breaker Sensor Malfunction

CIRCUIT DESCRIPTION

The HV ECU checks the line connection of the circuit breaker sensor (collision signal) and gives warning to the driver if malfunction is detected.

DTC P3135 – Information code 348, 349

INF. code.	Detecting Condition	Trouble Area
348	GND short in circuit breaker sensor	• Circuit breaker sensor • Wire harness
349	Open or +B short in circuit breaker sensor	

WIRING DIAGRAM

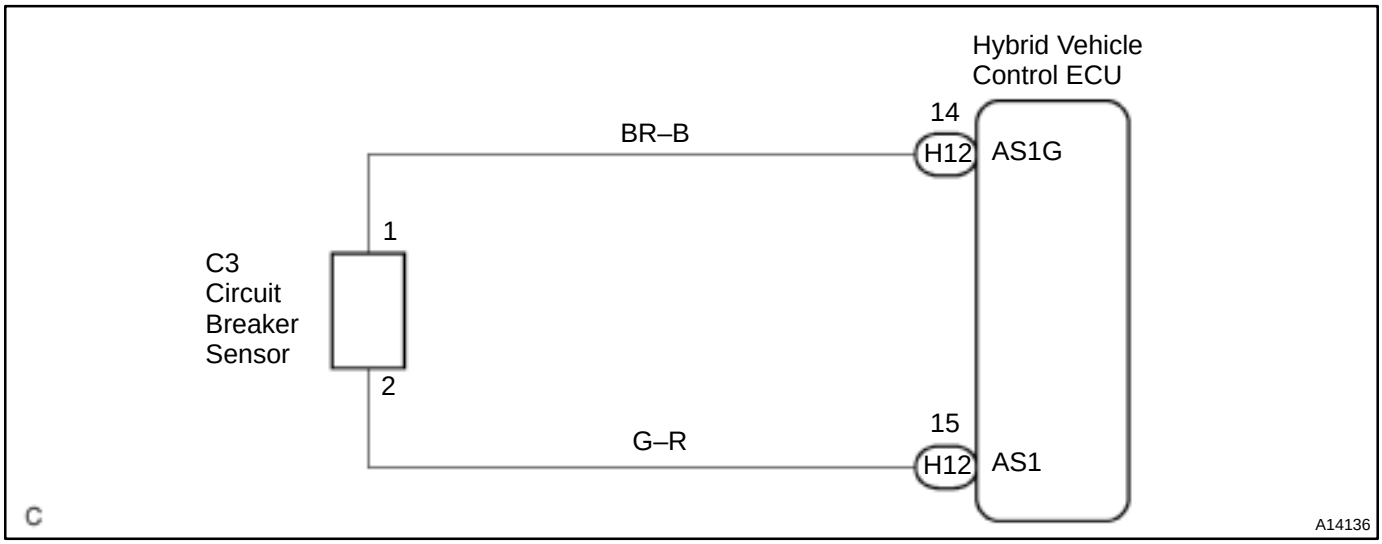

INSPECTION PROCEDURE

1	**Check for open, short and +B short in wire harness between circuit breaker sensor No. 1 and No. 2 terminals and HV ECU AS1G and AS1 terminals (See page IN–41).**

HINT:
Confirm that there is no open circuit in the wire harness. The circuit breaker sensor circuit has +B short if the voltage of the HV ECU AS1 terminal is more than 5V with the ignition ON.

NG → **Repair or replace wire harness.**

OK

Check for open in resistance between circuit breaker sensor terminals and then replace circuit breaker sensor (Circuit breaker sensor resistance: 820 ± 82 Ω).

DI83B–02

DTC	P3140	Interlock Malfunction

CIRCUIT DESCRIPTION

If the HV ECU detects the operation of the safety devices (removal of the service plug, inverter terminal cover and sensor cover) while the vehicle is not running (with the vehicle is stopped), it will shut down the system main relay. It the safety devices are correctly installed, it will resume the normal operation after the power source is supplied again. If it does not, there is a possibility of an open circuit, so perform the same inspection as the information code 351.

HINT:

- When using an OBD¿ scan tool other than TOYOTA hand–held tester, check all the steps.
- When using TOYOTA hand–held tester, confirm the information code and check it.

DTC P3140 – Information code 350

INF. code.	Detecting Condition	Trouble Area
350	Safety devices operating with vehicle is stopped (ILK signal ON)	–

CIRCUIT DESCRIPTION

The HV ECU records the information code 351 and gives warning to the driver when it detects an open circuit in the interlock signal circuit while the vehicle is running. In this case, it does not shut down the high voltage system.

DTC P3140 – Information code 351

INF. code.	Detecting Condition	Trouble Area
351	Open circuit in interlock signal circuit while vehicle is running	• Interlock switch • Inverter terminal cover • Converter & inverter assembly • Wire harness

WIRING DIAGRAM

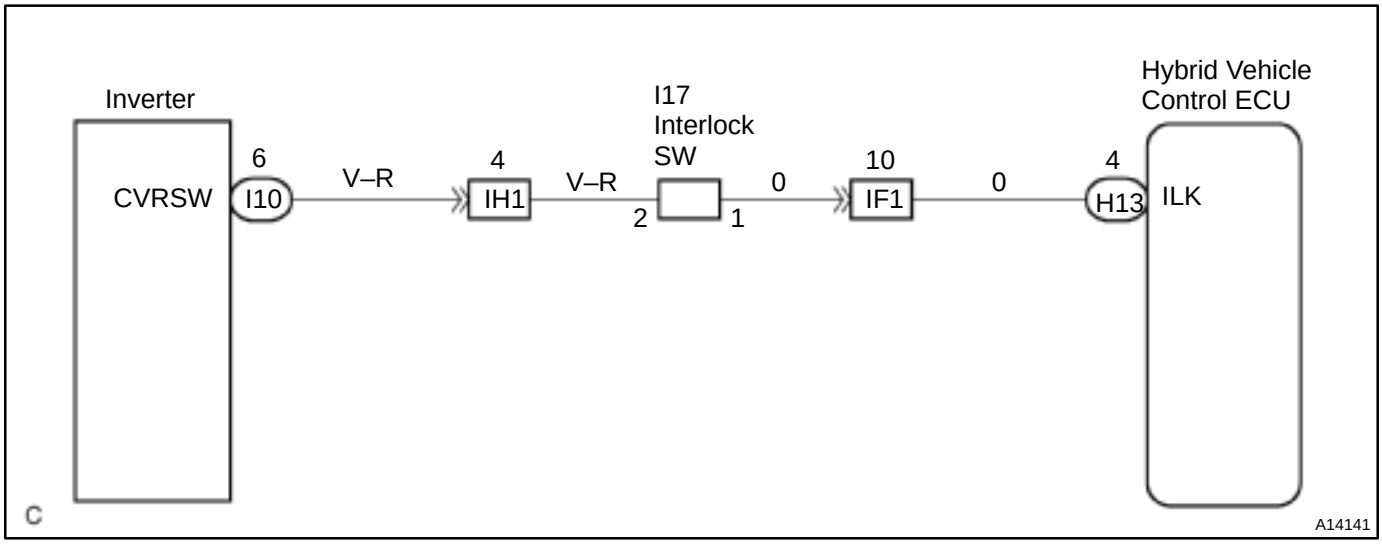

INSPECTION PROCEDURE

1	Check installation condition of inverter terminal cover and sensor cover.

NG → Install them correctly.

OK

2	Check continuity of wire harness between interlock switch No. 1 terminal and HV ECU ILK terminal and interlock switch No. 2 terminal and inverter CVRSW terminal (See page IN–41).

OK:

Continuity: Less than 1 Ω

NG → Repair or replace wire harness.

OK

3	Check continuity between inverter CVRSW terminal and body ground (See page IN–41).

OK:

Continuity: Less than 1 Ω

NG → Replace converter & inverter assembly.

OK

Confirm that interlock switch is defective and replace it.
Check interlock switch (See page HV–38)

DI83C–02

DTC	P3145	Vehicle Speed Sensor Circuit Malfunction

CIRCUIT DESCRIPTION

DTC P3145 – Information code 352

INF. code.	Detecting Condition	Trouble Area
352	No input of vehicle speed signal during cruise control driving	• Wire harness

WIRING DIAGRAM

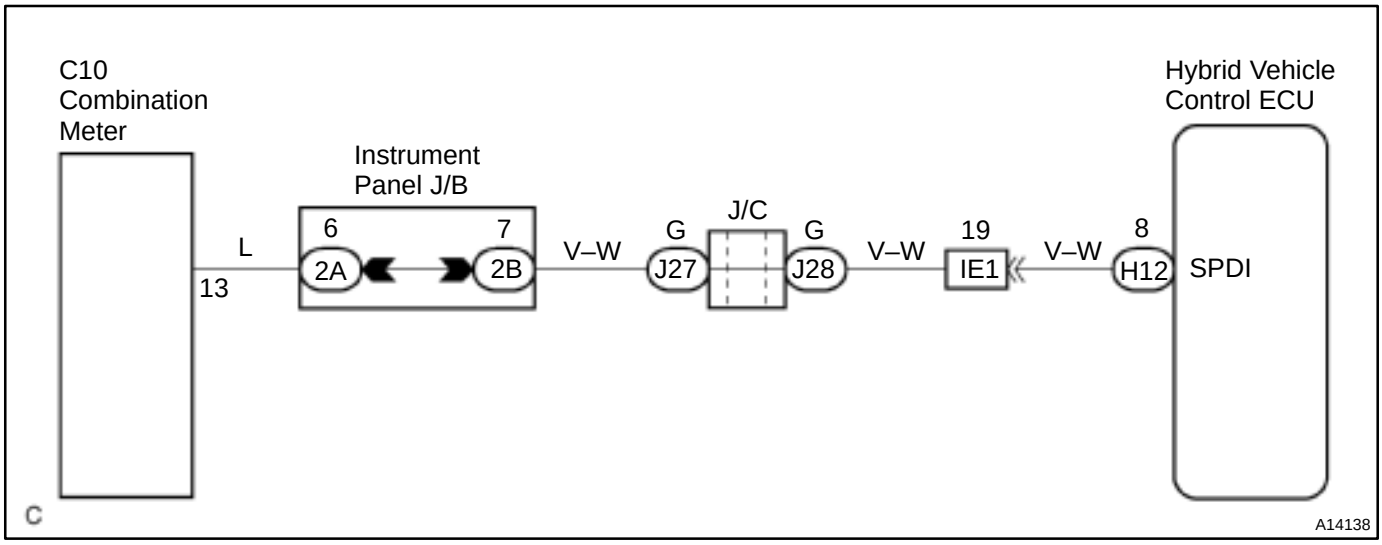

INSPECTION PROCEDURE

1	**Is DTC P0500 of engine ECU being output?**

YES → **Check DTC P0500.**

NO

Check continuity of wire harness between J26 J/B G terminal and HV ECU SPDI terminal and repair wire harness.

DI2VS–03

CUSTOMER PROBLEM ANALYSIS CHECK

Prius Problem Check Sheet

Please fill in the blanks within bold frame.

Name of Dealer	Person in Charge at Headquarters	Person in Charge at Dealer
Office		

Vehicle Specifications

Model Code	NHW11–	Problem Occurrence Date	. . . :	Odometer Reading	km miles
Frame No.		Service Entry Date	. .	Registration date	. .
Unit No. etc.		Vehicle Delivery Date	. .		
Option	( ) Navigation (equipped by ( ) MOP ( ) dealer) ( ) Cold climate specification ( ) others( )				

Interview Results

Contents of complaint (Status when and before/after occurring in the order of events as correct as possible)

Characteristics of Customer

Gender	( ) Male ( ) Female
Age	
Occupation	
Vehicle used before	
Main use area	city area ( ) % suburbs ( ) % mountain area ( ) % Others ( ) ( ) %
Frequency in use	times/day or week or month
Others	

Driving Condition	Road Condition	Vehicle Condition			Others
Vehicle Speed _____km/h _____mph ( ) when starting ( ) when according ( ) When normal driving ( ) when decelerating ( ) when braking ( ) when shopping ( ) when parking ( ) when turning ( ) when ABS actuating ( ) others ( )	( ) flat road ( ) up hill ( ) down hill incline of _____° /% distance _____ km _____mph ( ) dry paved road ( ) wet paved road ( ) rough paved road ( ) unpaved road ( ) snowy/frozen road ( ) bump/curb ( ) others ( )	( ) when starting ( ) right after starting ( ) until ___min. after starting ( ) until ___min. after starting of driving ( ) when shopping system Status of engine ( ) while shopping engine ( ) when starting engine ( ) when revolving engine	HV Battery indication ( ) 4/4 ( ) 3/4 ( ) 2/4 ( ) 1/4 ( ) unidentified Shift position (indication) ( ) P ( ) R ( ) N ( ) D ( ) B ( ) when operating _____ → _____ ( ) no indication ( ) unidentified A/C status ( ) A/C ( ) FULL ( ) OFF ( ) unidentified	Warning light (MIL) ( ) ON ( ) OFF ( ) PS ( ) main battery ( ) HV! ( ) engine ( ) charge ( ) output control ( ) brake ( ) ABS ( ) others ( )	Weather:_____ Temperature: _____ °C _____ °F Brake operation ( ) brake slowly ( ) Brake suddenly ( ) use two pedals system Frequency in occurrence ( ) always ( ) sometimes ( ) only once Fuel level ( ) segments

Vehicle Verification Results

Verification Results of Warning Light	Verification Results of Diagnostic Code	
( ) ON ( ) OFF ( ) engine ( ) HV ( ) HV battery ( ) output control warning light ( ) charge ( ) PS ( ) brake ( ) ABS ( ) others ( )	Engine	
	HV	
	INF. code	
	HV battery	
	Brake	
	PS	

Vehicle Inspection Results (Verification items, reason to identify/presume the cause parts, etc.)	Duplication Status
	( ) always ( ) sometimes ( ) no reproduction
Replacement Parts	**Confirmation Results After Repair**
problem parts: No/Yes (Sending date: . .)	( ) Normal ( ) reproduction ( ) others ( )

DI820–01

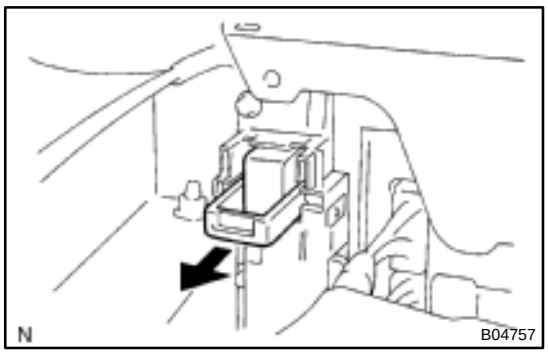

PRE–CHECK

1. PRECAUTION

(a) To distinguish a trouble and replace a defective part, take necessary preventive measures against an electric shock (See page IN–4).

(b) Some portions of the wiring harness in the THS vehicle have the circuits, to which a high voltage is applied. To prevent an electrical shock, be sure to observe the following:

(1) Wear insulated gloves during inspection.

(2) Remove a service plug and do not start any repair operation before 5 minutes have passed, then confirm that the voltage at the output terminals has dropped down to 12 V or less.

(3) Use insulated tools during inspection.

(4) When disengaging wiring connectors, hold the connector bodies to avoid pulling the wires. When engaging wiring connectors, be sure to engage them securely.

(c) Do not leave tools or parts (bolts, nuts, etc.) inside the cabin.

(d) Do not carry metallic objects such as mechanical pencils or scales.



2. DIAGNOSIS SYSTEM

(a) Description

- The HV Battery ECU has a self–diagnosis system by which malfunction in the computer itself or in Hybrid System is detected and the master warning light in the combination meter and the Hybrid system warning light in the multi–information display lights up.

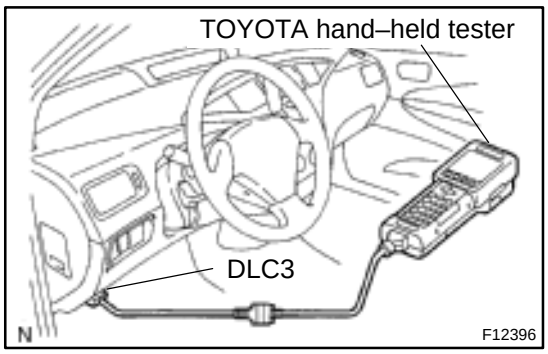

- To check the Diagnostic Trouble Codes (DTC), connect the TOYOTA hand–held tester to the Data Link Connector 3 (DLC3) on the vehicle. The TOYOTA hand–held tester also enables you to erase the DTC and check freeze frame data and various forms of THS data.
- Freeze frame data:
  Freeze frame data records the battery condition when a malfunction is detected.
  When troubleshooting, this is useful for knowing the battery condition.

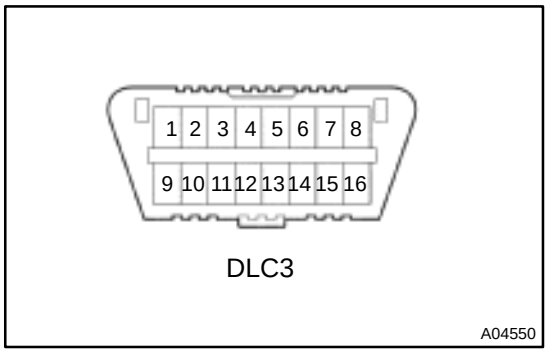

(b) Check the DLC3.
The HV control ECU conforms to ISO 14230 for communication.
The terminal arrangement of the DLC3 complies with SAEJ1962 and matches the ISO 14230 format.

Terminal No.	Connection/Voltage or Resistance	Condition
7	Bus ⊕ Line/Pulse generation	During transmission
4	Chassis Ground ↔ Body Ground/1 Ω or less	Always
5	Signal Ground ↔ Body Ground/1 Ω or less	Always
16	Battery Positive ↔ Body Ground/10 – 15 V	Always

HINT:
If your display shows UNABLE TO CONNECT TO VEHICLE when you have connected the cable of the TOYOTA hand–held tester to the DLC3, turned the motor switch ON and operated the tester, there is a problem in the vehicle or tool.

- If communication is normal when the tool is connected to another vehicle, inspect the DLC3 on the original vehicle.
- If communication is still not possible when the tool is connected to another vehicle, the problem is probably in the tool itself, so consult the Service Department.

3. INSPECT DIAGNOSIS

(a) Check the auxiliary battery.
(1) Measure the voltage of the auxiliary battery.
Voltage: 10 – 15 V



(2) Inspect the auxiliary battery, fuses, fusible links, wiring harness, connectors and ground.

(b) Check the master warning light.

(1) Turn the ignition switch ON and confirm that the master warning light comes on.

HINT:

If the master warning light does not come on, suspect a burnt fuse, burnt bulb, or open in wiring harness.

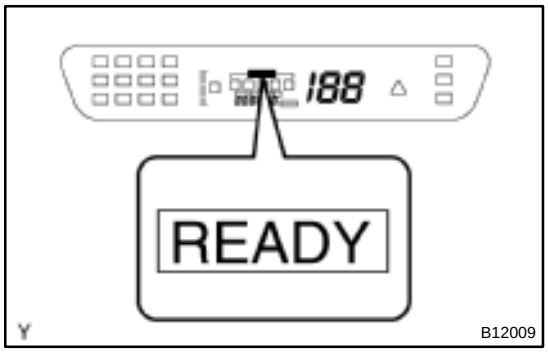

(2) When the ”READY” light is ON, the master warning light should go off.

If the lamp remains on, the diagnosis system has detected a malfunction or abnormality in the system.

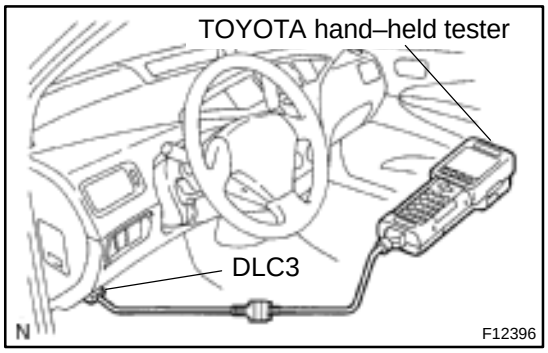

(c) Check the DTC.

(1) Prepare a TOYOTA hand–held tester.

(2) Connect the TOYOTA hand–held tester to the DLC3.

(3) Turn the ignition switch ON and push the TOYOTA hand–held tester main switch ON.

(4) Use the TOYOTA hand–held tester to check the DTC and freeze frame data and note them down. (For operating instructions, see the TOYOTA hand–held tester operator’s manual).

Since the HV battery ECU stores DTC and freeze frame data, when troubleshooting, check all of the DTC, write down the freeze fame data and perform inspection according to the procedures of ”Circuit Inspection”.

Because the HV battery ECU is communicating with the HV ECU, if any DTC is stored in the HV battery ECU, check and record DTC stored in the HV ECU (For tables for DTC, see page DI–177).

(5) See a related page to confirm details of the DTC.

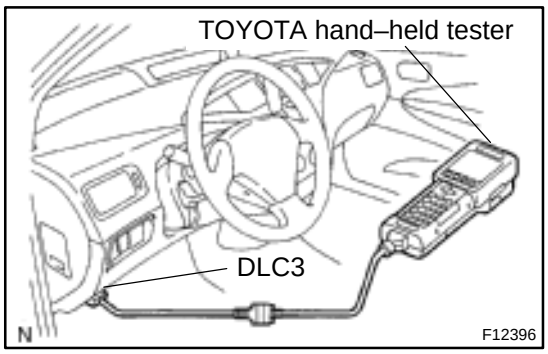

(d) Clear DTC after completion of repair.
(1) Connect the TOYOTA hand–held tester to the DLC3.

HINT:
Before clearing, check that DTC for the HV battery ECU, DTC for the ECU which is related with freeze frame data and the freeze frame data are recorded.

(2) Operate the TOYOTA hand–held tester to erase the DTC (See the TOYOTA hand–held tester operator's manual.).

4. CHECK FOR INTERMITTENT PROBLEMS

(a) Perform a simulation test (See page IN–30).

HINT:
In the simulation test, reproduce the condition at trouble occurrence based on the customer's comments and the freeze frame data recorded with the DTC.

(b) Check the connector and terminal (See page IN–41).

(c) Handle the connector (See page IN–41).

5. TOYOTA HAND–HELD TESTER DISPLAY ITEMS

TOYOTA hand–held tester display	Measurement Item
BATTERY SOC	Battery State of charge
ONB CHARGE TIME	Cumulative number of times of on–board equalizing charging
BATTERY LO TIME	Cumulative number of times of battery dies
DC INHIBIT TIME	Cumulative number of times of discharge inhibition
IB MAIN BATTERY	IB main battery current (with correction)
BATT BLOCK V#	Battery block voltage
BAT BLOCK MIN V	Battery block minimum voltage
MIN BAT BLOCK #	Minimum voltage battery block
BAT BLOCK MAX V	Battery block maximum voltage
MAX BAT BLOCK #	Maximum voltage battery block
BATT INSIDE AIR	Ambient temperature inside battery pack
BATTERY TOO HI #	Cumulative number of times of too–high battery voltage
VMF FAN VOLTAGE	Battery cooling fan voltage
AUX. BATT V	Auxiliary battery voltage
WIN	Charge restriction value
WOUT	Discharge restriction value
DELTA SOC	Difference between MAX. and MIN. values of SOC at every battery block.
SBLW FAN ST RQS	SBL cooling fan stop request signal
COOLING FAN HI	Cooling fan operation in high speed
COOLING FAN MID	Cooling fan operation in middle speed
COOLING FAN LO	Cooling fan operation in low
CCTL	Off–board equalizing charge control signal
EQC0 DF RELAY	EQC0 dead front relay
EQTR CHARGE ST	EQTR uniform charging start signal
ONBORD CHARGE	On–board equalizing charging status
PRE ONBORDE CH	Pre–On–board charging status
NORMAL STATUS	Normal status
INSIDE RESIST #	Inside resistance

BATT TEMP #	Battery temperature
ECU CODE	ECU code
IG OFF HOUR	Average time of IG OFF
IG ON HOUR	Average time of IG ON
ET OFF CHG HR	Estimation of time to finish OFF BOARD
DTC	The number of stored DTC

DI824–01

CIRCUIT INSPECTION

DTC	P1600	Back Up Power Source Circuit Malfunction

CIRCUIT DESCRIPTION

Battery positive voltage is supplied to terminal AM of the Battery ECU even when the ignition switch is OFF to read the DTC memory and freeze frame data adaptive control value memory, etc.

DTC No.	DTC Detecting Condition	Trouble Area
P1600	Open in back up power source circuit	• Open in back up power source circuit • Battery ECU

HINT:
If DTC P1600 appears, the Battery ECU does not store any other DTC.

WIRING DIAGRAM

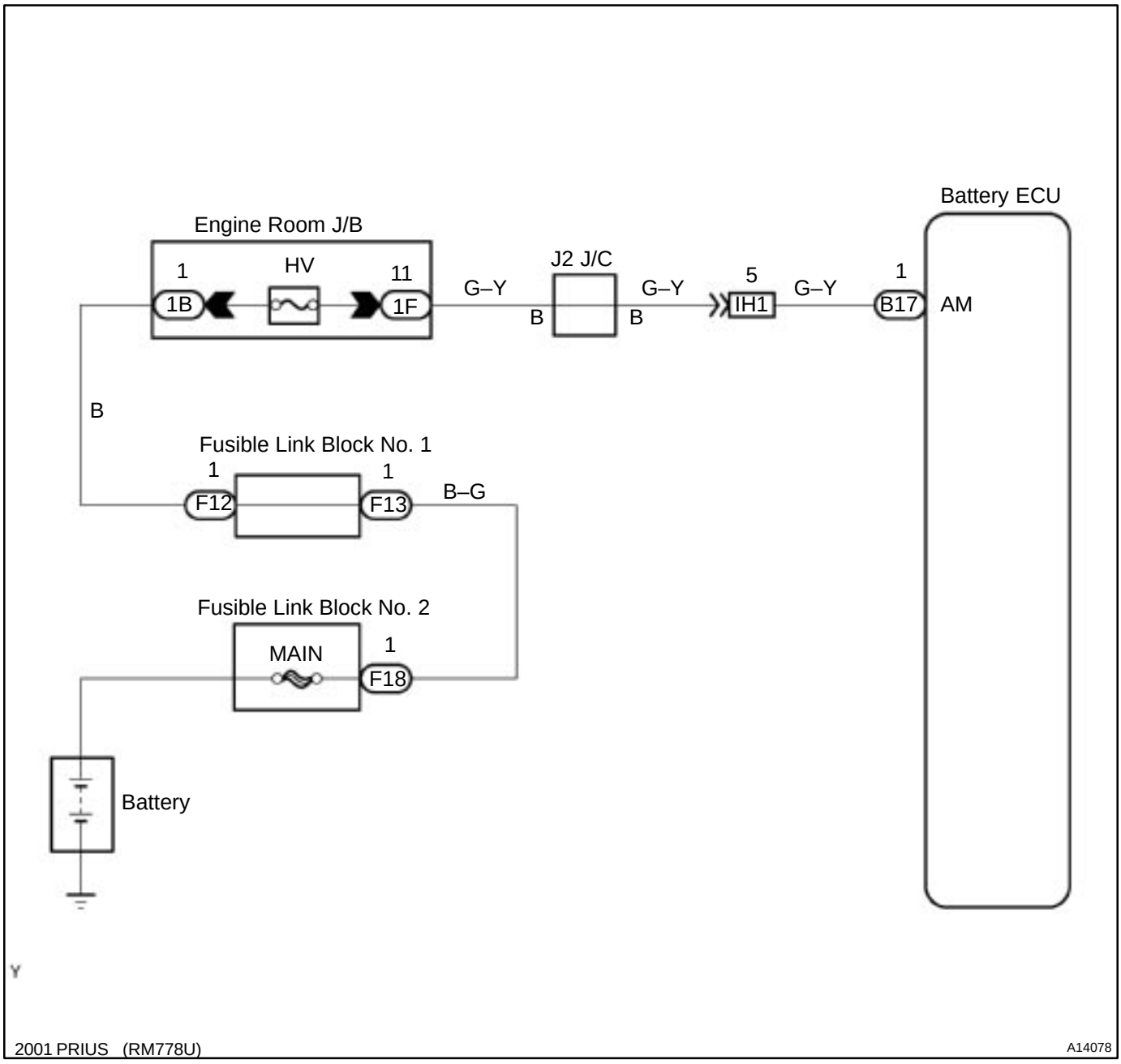

INSPECTION PROCEDURE

HINT:

Read freeze frame data using a TOYOTA hand–held tester or OBD II scan tool. Because freeze frame data records the battery condition when the malfunction is detected. When troubleshooting, this is useful for knowing the battery condition.

1	**Check voltage between terminal AM of Battery ECU connector and body ground.**

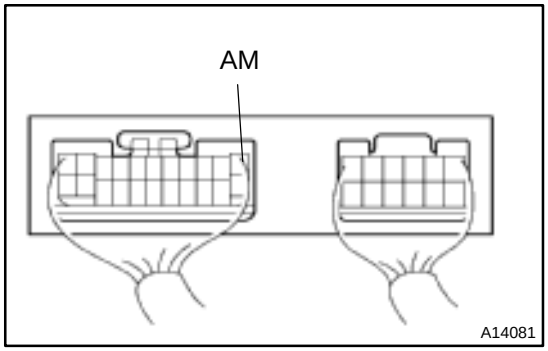

PREPARATION:

Remove the luggage trim.

CHECK:

Measure the voltage between terminal AM of the Battery ECU connector and body ground.

OK:

Voltage: 9 – 14 V

OK	**Check and replace Battery ECU (See page IN–41).**

NG

2	**Check HV fuse of engine room J/B.**

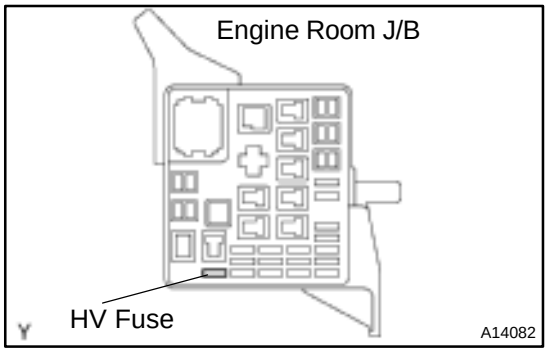

PREPARATION:

Remove the HV fuse from the engine room J/B.

CHECK:

Check the continuity of the HV fuse.

OK:

Continuity

NG	**Check for short in all harness and components connected to HV fuse.**

OK

Check and repair harness or connector between battery and HV fuse, and HV fuse and Battery ECU (See page IN–41).

DI826–01

DTC	P3002	HV ECU Communication Malfunction

CIRCUIT DESCRIPTION

The battery ECU receives information of the AC ECU, system main relay connection signals, etc. sent from the HV ECU, and stores DTC when an error is detected in the receives information.

DTC No.	DTC Detecting Condition	Trouble Area
P3002	No serial signals transmitted from HV ECU	• Communication bus line • HV ECU

HINT:
Check DTC of other ECUs and see whether any communication error of the HV ECU is stored or not.
If HV communication errors are stored in then one ECU, replace the HV ECU.

WIRING DIAGRAM

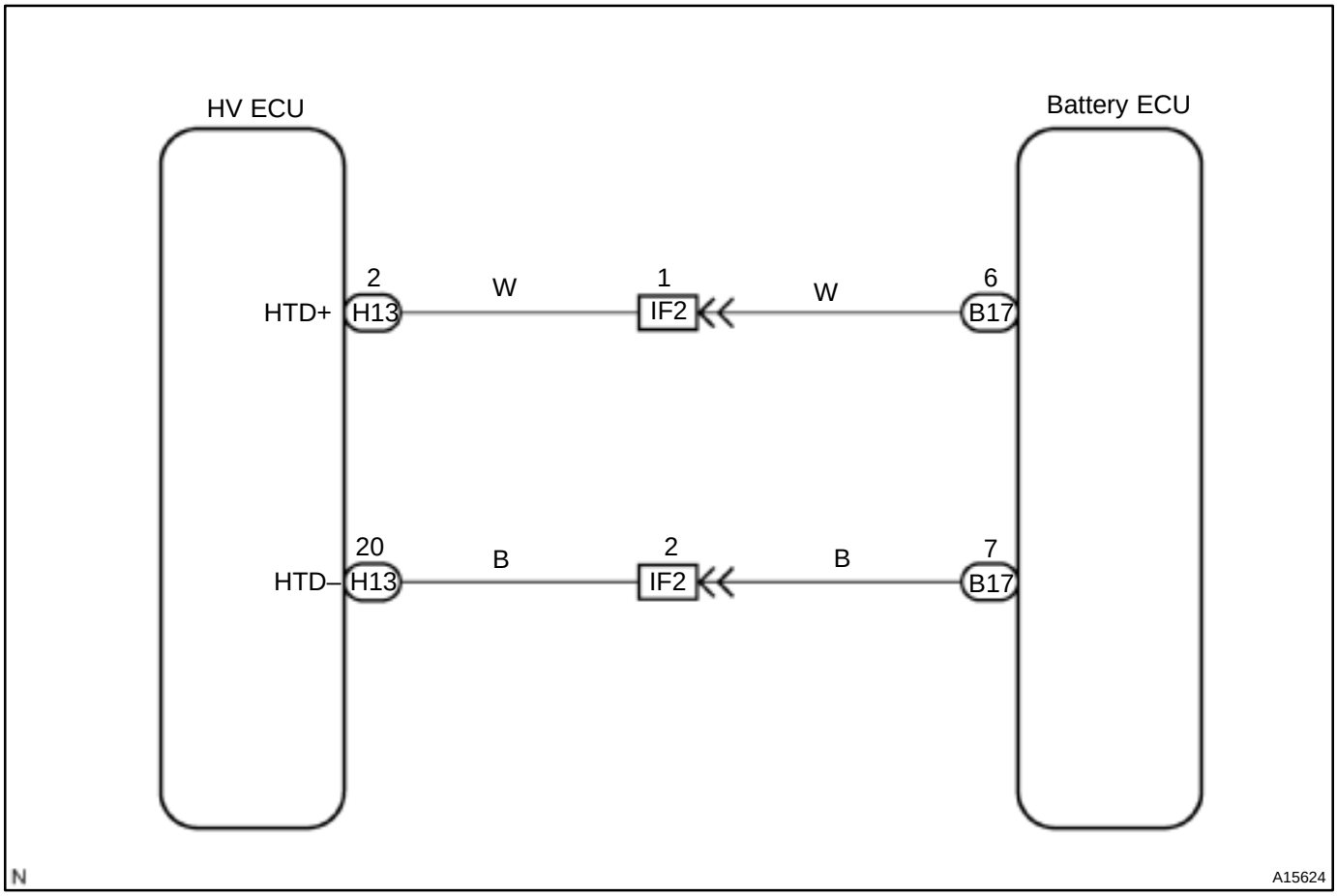

INSPECTION PROCEDURE

1	**Check for open and short in wire harness between HV ECU and battery ECU.**

PREPARATION:

Disconnect the connector from the battery ECU and the HV ECU

CHECK:

Check that the communication bus line is not short or open.

Terminals for checking open and short:

HV ECU Terminals	Battery ECU Terminals
H13 – 2	B17 – 6
H13 – 20	B17 – 7

OK:

No open or short.

NG → **Repair or replace the wire harness.**

OK ↓

2	**Stop operation of all optional electric products for vehicle and check if same DTC is stored.**

NO → **Stop using product that causes noise.**

YES ↓

Replace the HV ECU.

DI827–01

DTC	P3005	High Voltage Fuse Snapped

CIRCUIT DESCRIPTION

A fuse is set in the service plug to protect high–voltage system parts.

DTC No.	DTC Detecting Condition	Trouble Area
P3005	Although interlock switch is connected, voltage of battery block No. 10 is less than specified.	• High voltage fuse • Power cable

WIRING DIAGRAM

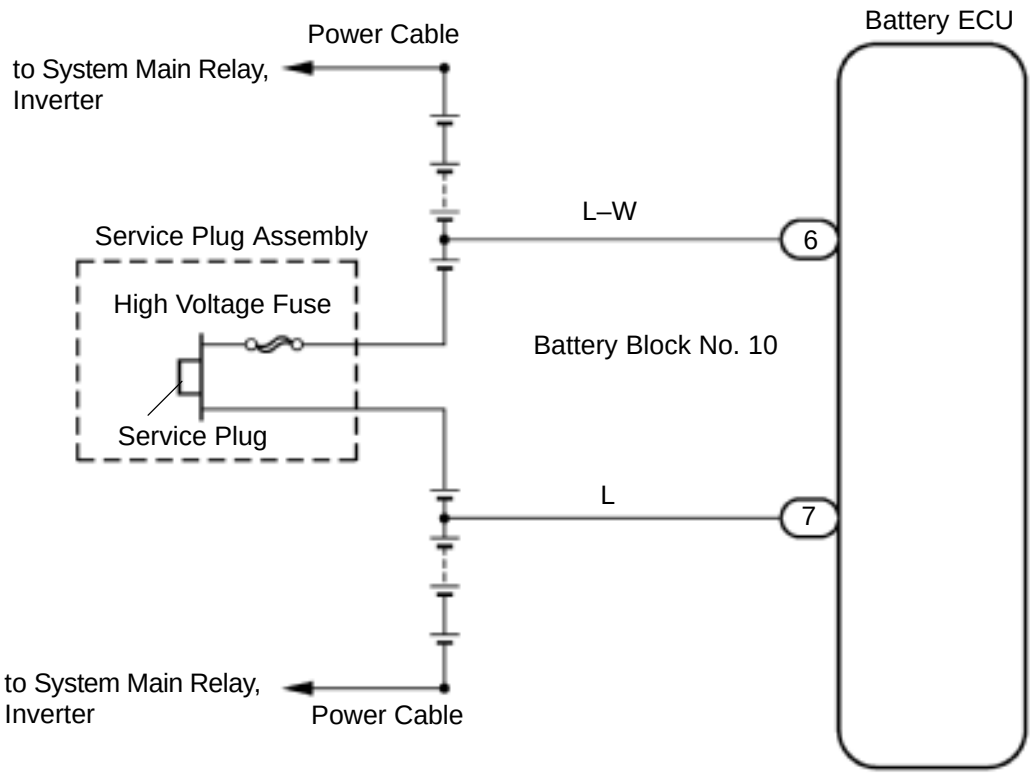

N

A13558

INSPECTION PROCEDURE

1	Are there any other codes (besides DTC P3005) and other ECU being output?

YES → Go to relevant DTC chart.

NO

2	Check continuity of high voltage fuse in the service plug assembly and check condition of service plug terminal (Loosened, poor contact, etc.).

OK → Repair or replace the power cable.

NG

Repair or replace the service plug or the high voltage fuse in the service plug assembly.

DI82A–01

DTC	P3009	Leak Detected

CIRCUIT DESCRIPTION

Electric leak from the high–voltage system, which may seriously harm the human body, is detected by this code.

DTC No.	DTC Detecting Condition	Trouble Area
P3009	Electric leak from high–voltage system (Insulating resistance of power cable is 100 kΩ or less.)	• Power cable • HV transaxle • Converter & inverter assembly • Battery cover • System main relay • Battery temperature sensor • Battery ECU • Battery carrier catch bracket • Main battery cable • Service plug assembly • HV battery assembly

INSPECTION PROCEDURE

1	Is DTC P3125 of HV ECU being output?

YES → Go to relevant DTC chart.

NO

2	Are there any other codes (Desides DTC P3009) being output?

YES → Go to relevant DTC chart.

NO

3	Is DTC P3009 of battery ECU being output?

PREPARATION:

(a) Before clearing the DTC, check that related DTC and freeze frame data are recorded in the given table.
(b) With the shift lever in P, delete this DTC using a TOYOTA hand–held tester.
(c) Turn the ignition switch OFF and then ON (Do not turn to ST.), leave it alone for 1 min. and then check for DTC.

CHECK:

Check that DTC P3009 is detected.

YES → **Go to step 8.**

NO

4	Is DTC P3009 of battery ECU being output? (Check for battery carrier catch bracket.)

PREPARATION:

(a) Under step 2 condition, turn the ignition switch OFF and disconnect the negative terminal of the auxiliary battery.
(b) Remove the service plug.
(c) Using the service plug, turn the interlock counterclockwise to unlock.
(d) Remove the 3 nuts and battery carrier catch bracket.
(e) Connect the negative terminal of the auxiliary battery and turn the ignition switch ON to clear DTC.

HINT:

When the ignition switch is turned ON, DTC P3140 is stored in the HV ECU. This happens because the service plug is removed, so continue the operation.

(f) After turning the ignition switch OFF, connect the service plug.
(g) Turn the ignition switch ON (to ST), leave it alone for 1 min. and then check for DTC.

CHECK:

Check that DTC P3009 is detected.

NO → **Check for contact between battery carrier catch bracket and power cable and if any defect is identified, replace defective part.**

HINT:

If no defect is identified at inspection, entry of foreign matter or water into the battery assembly or converter & inverter assembly may be possible as a cause.

YES

5	Check insulating resistance of power cable.

PREPARATION:

(a) Under step 3 condition, turn the ignition switch OFF and disconnect the negative terminal of the auxiliary battery.
(b) Remove the service plug.
(c) Disconnect the 2 power cables from the converter & inverter.
(d) Disconnect the 2 power cables from the HV battery.

CHECK:

Using a megger (500V), measure the insulating resistance between the power cable and body ground.

OK:

Insulating resistance: 10MΩ or more

NG → **Replace the power cable.**

OK

6	Check insulating resistance of power cable of hybrid transaxle.

PREPARATION:

(a) Under step 4 condition, disconnect the 3 power cables for MG2 and a power cable for MG1 from the converter & inverter assembly.
(b) Check that the voltage between each of the 6 terminals of the power cables and body ground is 0 V.

CHECK:

Using a megger (500V), measure the insulating resistance between each of the 6 terminals and the hybrid transaxle.

OK:

Insulating resistance: 10MΩ or more

NG → **Replace the hybrid transaxle assembly.**

OK

7	**Check insulating resistance of converter & inverter assembly.**

CHECK:

Using a megger (500V), measure the insulating resistance between each of 2 connected parts of the HV battery power cables to the converter & inverter and the converter & inverter itself, and between each of 6 connected parts of MG2/MG1 power cables to the converter & inverter and the converter & inverter itself. and the hybrid transaxle.

OK:

Insulating resistance: 0.9MΩ

NG → **Replace the converter & inverter assembly.**

OK

Replace the battery ECU.

8	**Is DTC P3009 of battery ECU being output? (Check for battery cover.)**

PREPARATION:

(a) Under step 2 condition, turn the ignition switch OFF and disconnect the negative terminal of the auxiliary battery.
(b) Remove the service plug.
(c) Using the service plug, turn the interlock counterclockwise to unlock.
(d) Remove the 3 nuts and battery carrier catch bracket.
(e) Remove the 2 bolts and power cables.
(f) Remove the battery cover.
(g) Connecting the negative terminal of the auxiliary battery, turn the ignition switch ON and clear the DTC.

HINT:

When the ignition switch is turned ON, DTC P3140 is stored in the HV ECU. This happens because the service plug is removed, so continue the operation.

(h) After turning the ignition switch OFF, connect the service plug.
(i) Turn the ignition switch ON (to ST), leave it alone for 1 min. and then check for DTC.

CHECK:

Check that DTC P3009 is detected.

NO → **Check for contact between battery carrier catch bracket and power cable and if any defect is identified, replace defective part.**

HINT:

If no defect is identified at inspection, entry of foreign matter or water into the battery assembly or converter & inverter assembly may be possible as a cause.

YES

9	Check insulating resistance of main battery cable.

PREPARATION:

(a) Under step 7 condition, turn the ignition switch OFF and disconnect the negative terminal of the auxiliary battery.
(b) Remove the service plug.
(c) Remove the main battery cables. (Disconnect 4 terminals of a long and a short cables connected between the system main relay and the HV battery.)

CHECK:

Using a megger (500V), measure the insulating resistance between the main battery cable and body ground.

OK:

Insulating resistance: 10MΩ or more

NG → **Replace the main battery cable.**

OK

10	Check insulating resistance of system main relay.

CHECK:

Using a megger (500V), measure the insulating resistance between each of 2 connected parts of the system main relay to the power cables and body ground, and between each of 2 connected parts of the system main relay to the main battery cables and body ground.

OK:

Insulating resistance: 10MΩ or more

NG → **Replace the system main relay.**

OK

11	**Check insulating resistance of service plug assembly.**

PREPARATION:
Under step 9 condition, disconnect the cable terminal of the service plug assembly from the HV battery.
CHECK:
Using a megger (500V), measure the insulating resistance between 2 cable terminals and body ground.
OK:

Insulating resistance: 10MΩ or more

NG → **Replace the service plug assembly.**

OK

12	**Check insulating resistance of HV battery temperature sensor.**

PREPARATION:
Under step 10 condition, disconnect the HV battery temperature sensor connector from the battery ECU.
CHECK:
Using a megger (500V), measure the insulating resistance between each terminal of the HV battery temperature sensor and body ground.
OK:

Insulating resistance: 10MΩ or more

NG → **Replace the HV battery temperature sensor.**

OK

13	Is DTC P3009 of battery ECU being output?

PREPARATION:

(a) Under step 11 condition, disconnect the HV connector from the battery ECU.
(b) Connect the negative terminal of the auxiliary battery (with the service plug removed).
(c) Turn the ignition switch ON (not ST) and clear the DTC.

HINT:

When the ignition switch is turned ON, DTC P3140 is stored in the HV ECU. This happens because the service plug is removed, so continue the operation.

CHECK:

Check that DTC P3009 is detected.

YES → **Replace the HV battery ECU.**

NO

14	Check insulating resistance of wire harness for module voltage detection.

PREPARATION:

(a) Under step 12 condition, turn the ignition switch OFF and disconnect the negative terminal of the auxiliary battery.
(b) Remove the 36 nuts and the busbar module on the battery rear side.

CHECK:

Using a megger (500V), measure the insulating resistance between the connector terminal of the wire harness for the removed module's voltage detection and body ground.

OK:

Insulating resistance: 10 MΩ or more

NG → **Replace the HV battery assembly.**

OK

Replace the HV battery ECU.

DI82C–01

DTC	P3011–P3029	Battery Block # Malfunction

CIRCUIT DESCRIPTION

Internal resistance of each battery module is measured, detecting battery deterioration for each block, 1 to 19. Nineteen blocks of battery modules are arranged in the order of 1 to 19 from the ECU side.

DTC No.	DTC Detecting Condition	Trouble Area
P3011–P3029	Battery internal resistance is abnormal.	• Battery ECU • Battery pack

INSPECTION PROCEDURE

1	**Are there any other codes (besides DTC P3011–P3029) being outputs?**

YES → **Go to relevant DTC chart.**

NO

2	**Check that the block voltage during charging/ discharging.**

PREPARATION:

(a) To ensure safety, conduct this test in a wide, clear level area which provides good traction.
(b) Turn ON the ”READY” light.
(c) Warm up the engine and turn off the A/C switch.
(d) Fully apply the parking brake and chock the 4 wheels.
(e) Connect a TOYOTA hand–held tester to DLC3 and select HV BATTERY and then CURRENT DATA.
(f) Show voltage of the block corresponding to the DTC and other block (any block except the above–mentioned block).

CHECK:

(a) Keep your left foot pressed firmly on the brake pedal and shift into the R position.
(b) Confirm the engine stopped in the R position. Step on the accelerator pedal until the engine starts, stepping on the brake pedal firmly.
(c) Release the accelerator pedal when the engine starts. At the same time, monitor the change of the voltage before engine starting (during discharging) and after engine starting (during charging).

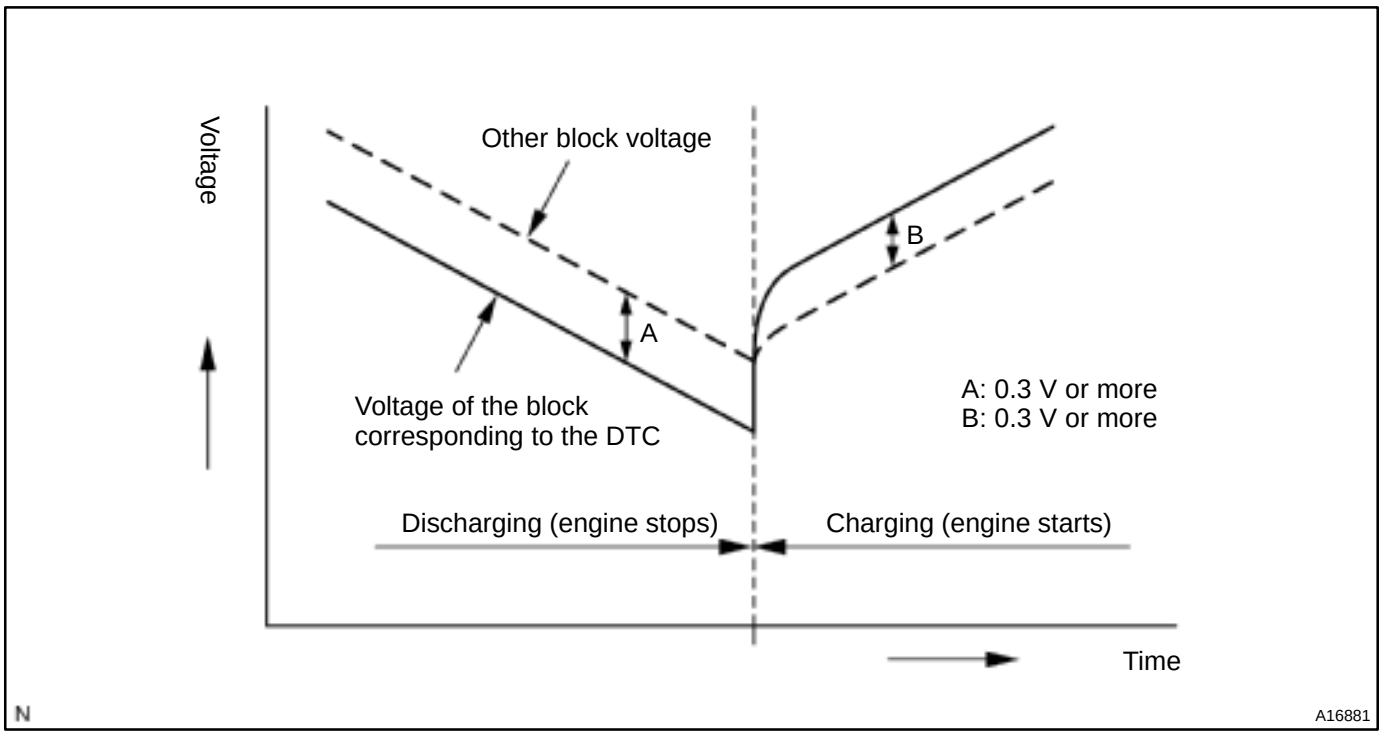

OK:

Before or after switch–over from discharging to charging, the relationship of the voltage size are reversed and the difference of the voltage is 0.3 V ore more.

OK	**Go to step 5.**

NG

3	**Check that the HV battery blocks voltage swings at stall test.**

PREPARATION:

(a) To ensure safety, conduct this test in a wide, clear level area which provides good traction.
(b) Turn ON the ”Ready” light.
(c) Warm up the engine and turn off the A/C switch.
(d) Fully apply the parking brake and chock the 4 wheels.
(e) Connect a TOYOTA hand–held tester to DLC3 and select HV BATTERY and then CURRENT DATA to show ”BAT BLOCK MIN V” and ”BAT BLOCK MAX V” on the TOYOTA hand–held tester.

CHECK:

(a) Keep your left foot pressed firmly on the brake pedal and shift into the R position.
(b) Stepping on the brake pedal, release the accelerator pedal during the engine moving and step on the accelerator pedal during the engine stopping.
(c) Continue STEP (b) for more than 20 min. and monitor the swing and the difference of the voltage between the data MAX V and MIN V.

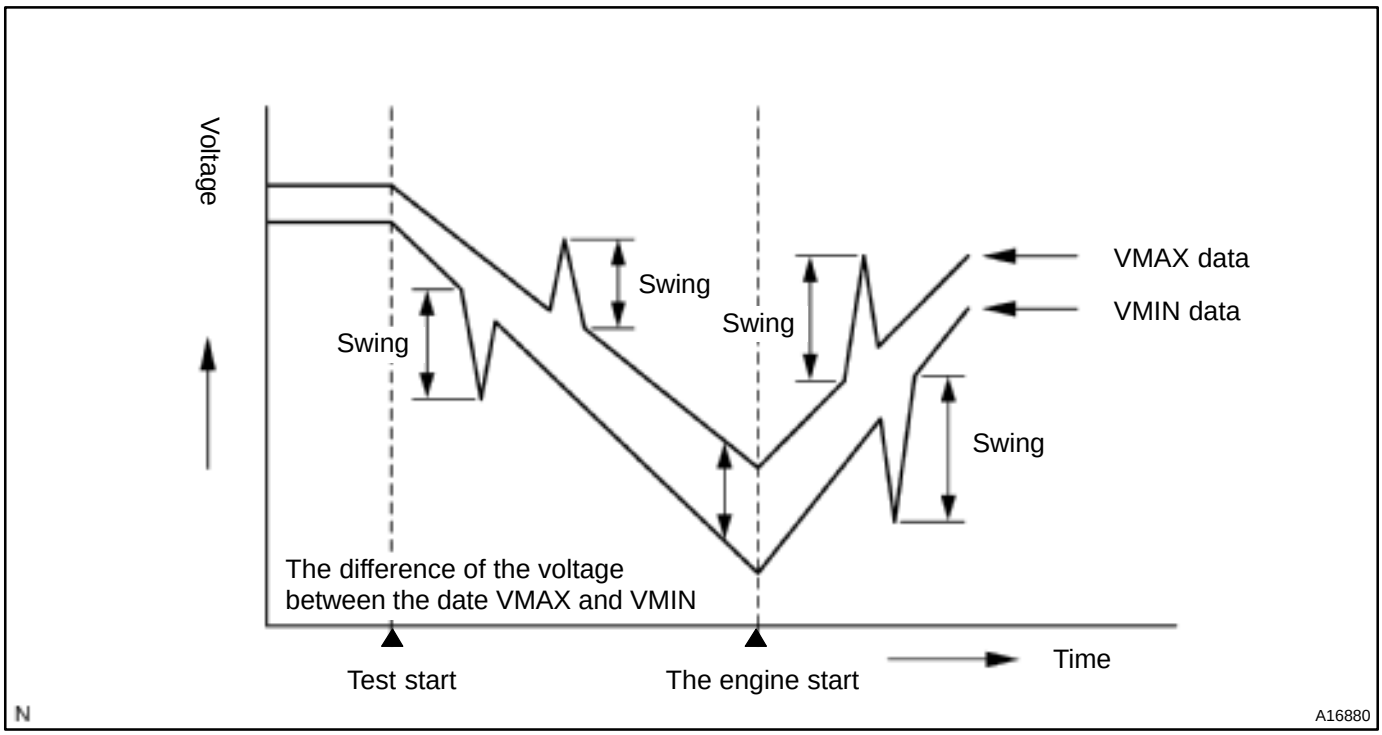

OK:

Standard voltage swing: Less than 2 V

NG	**Replace the battery ECU (See page IN–41).**

OK

4	**Check the difference of the voltage between the data V MAX and V MIN.**

Standard voltage difference: Less than 1.2 V

YES	**Replace the battery ECU. (See page IN–41).**

NO

5	**Replace the battery pack assembly, and initialize the battery ECU by performing an active test.**

DI82D–01

DTC	P3030	Battery Voltage Detective line Snapped

CIRCUIT DESCRIPTION

A voltage sensor set in a busbar module circuit measures a voltage of a pair of battery modules and sends signals to the battery ECU.

DTC No.	DTC Detecting Condition	Trouble Area
P3030	Open in battery voltage detective line	• Battery ECU • Open in battery voltage detective line • Wire harness, Busbar module

WIRING DIAGRAM

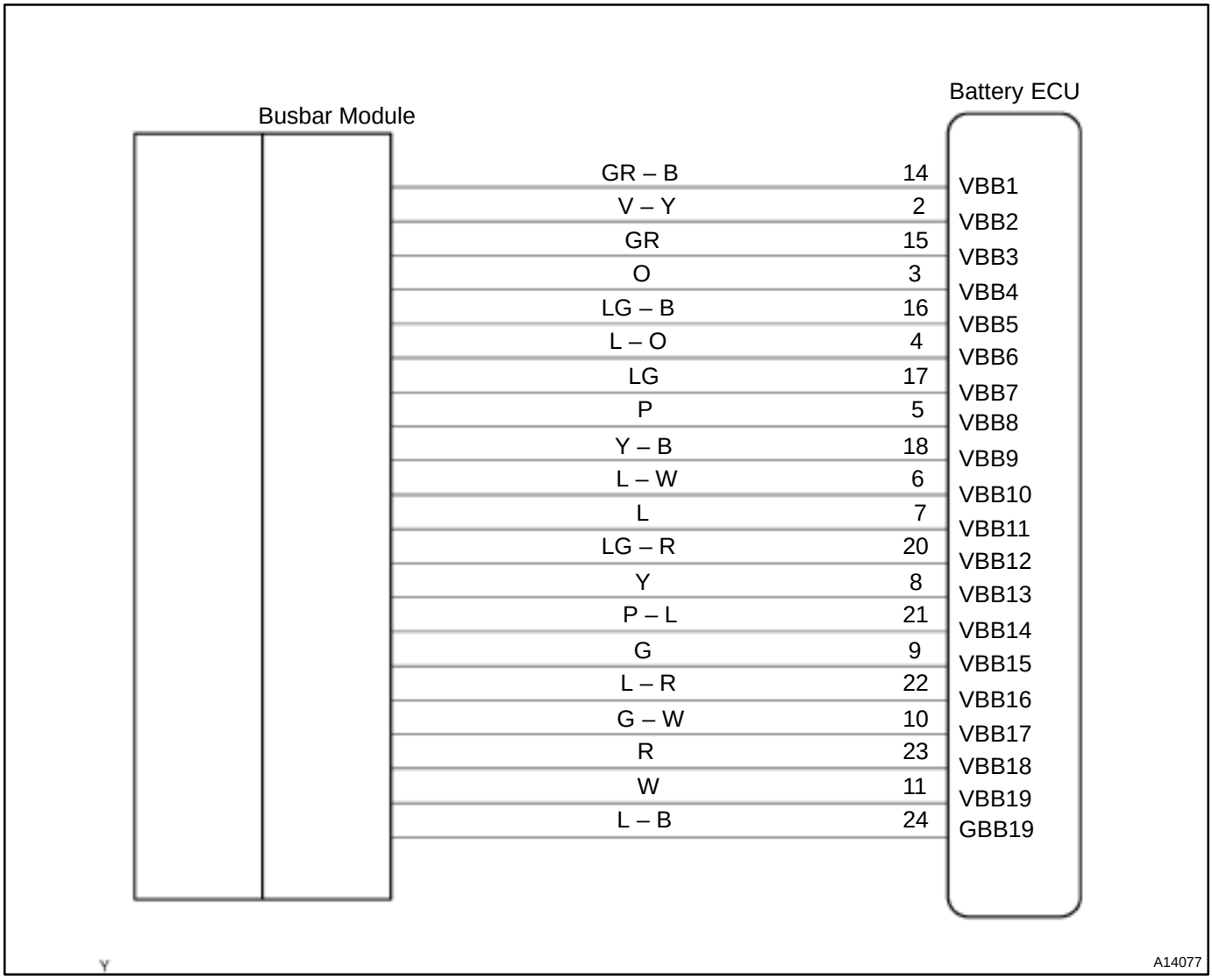

INSPECTION PROCEDURE

1	**Are there any other codes (besides DTC P3030) being outputs?**

YES → **Go to relevant DTC chart.**

NO

2	**Check voltage of battery block 1 to 19.**

CHECK:

Connecting a TOYOTA hand–held tester, check the ECU data.

HINT:

Nineteen blocks of battery modules are arranged in the order of 1 to 19 from the battery ECU side.

OK:

Standard voltage: 2V or more

OK → **Go to step 4.**

NG

3	**Check that the HV battery blocks voltage swings at stall test.**

PREPARATION:

(a) To ensure safety, conduct this test in a wide, clear level area which provides good traction.
(b) Turn ON the ”READY” light.
(c) Warm up the engine and turn off the A/C switch.
(d) Fully apply the parking brake and chock the 4 wheels.
(e) Connect a TOYOTA hand–held tester to DLC3 and select HV BATTERY and then CURRENT DATA to show ”BAT BLOCK MIN V” and ”BAT BLOCK MAX V” on the TOYOTA hand–held tester.

CHECK:

(a) Keep your left foot pressed firmly on the brake pedal and shift into the R position.
(b) Stepping on the brake pedal, release the accelerator pedal during the engine moving and step on the accelerator pedal during the engine stopping.
(c) Continue STEP (b) for more than 20 min. and monitor the swing and the difference of the voltage between the data MAX V and MIN V.

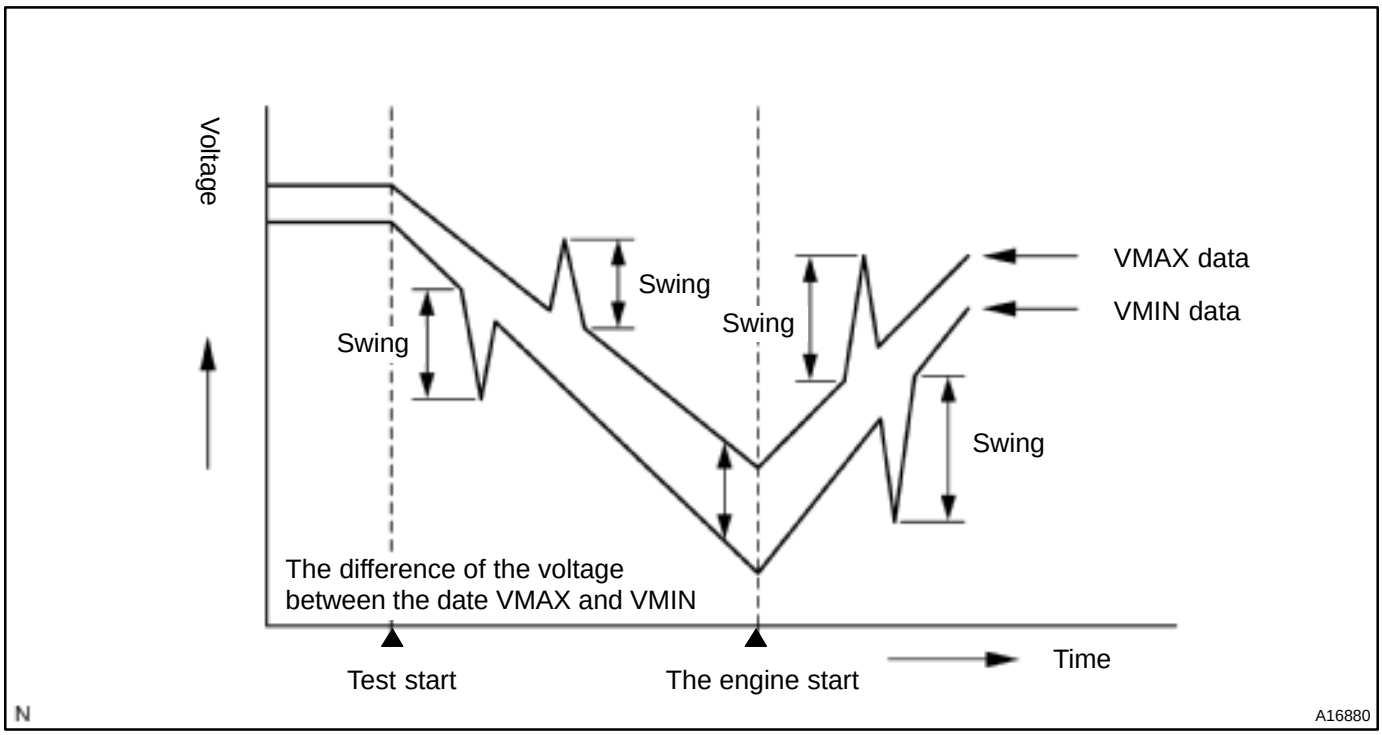

OK:

Standard voltage swing: 2 V or more

NG	**Replace the battery ECU (See page IN–41).**

OK

4	**Check tightening condition of busbar module of block and correct if necessary.**

OK:

The nut is not loosened.
Torque: 6 N·m (61 kgf·cm, 4.4 ft·lbf)

NG	**Tighten the nut.**

OK

5	**Check if busbar module connector is properly connected.**

NG	**Connect properly, repair or replace.**

OK

6	**Continuity check of the busbar module.**

NG → **Replace the busber module (See page IN–41).**

OK

Replace the battery ECU (See page IN–41).

DI82E–01

DTC	P3060	Battery Temperature sensor Circuit Malfunction

CIRCUIT DESCRIPTION

A thermistor in the sensor set in a battery pack changes its resistance according to battery bemperature. As the battery temperature falls or rises, the resistance rises or falls accordingly.

DTC No.	DTC Detecting Condition	Trouble Area
P3060	• Open or short in battery temperature sensor circuit • Battery temperature sensor circuit range/performance problem	• Battery temperature sensor • Connector and wire harness

WIRING DIAGRAM

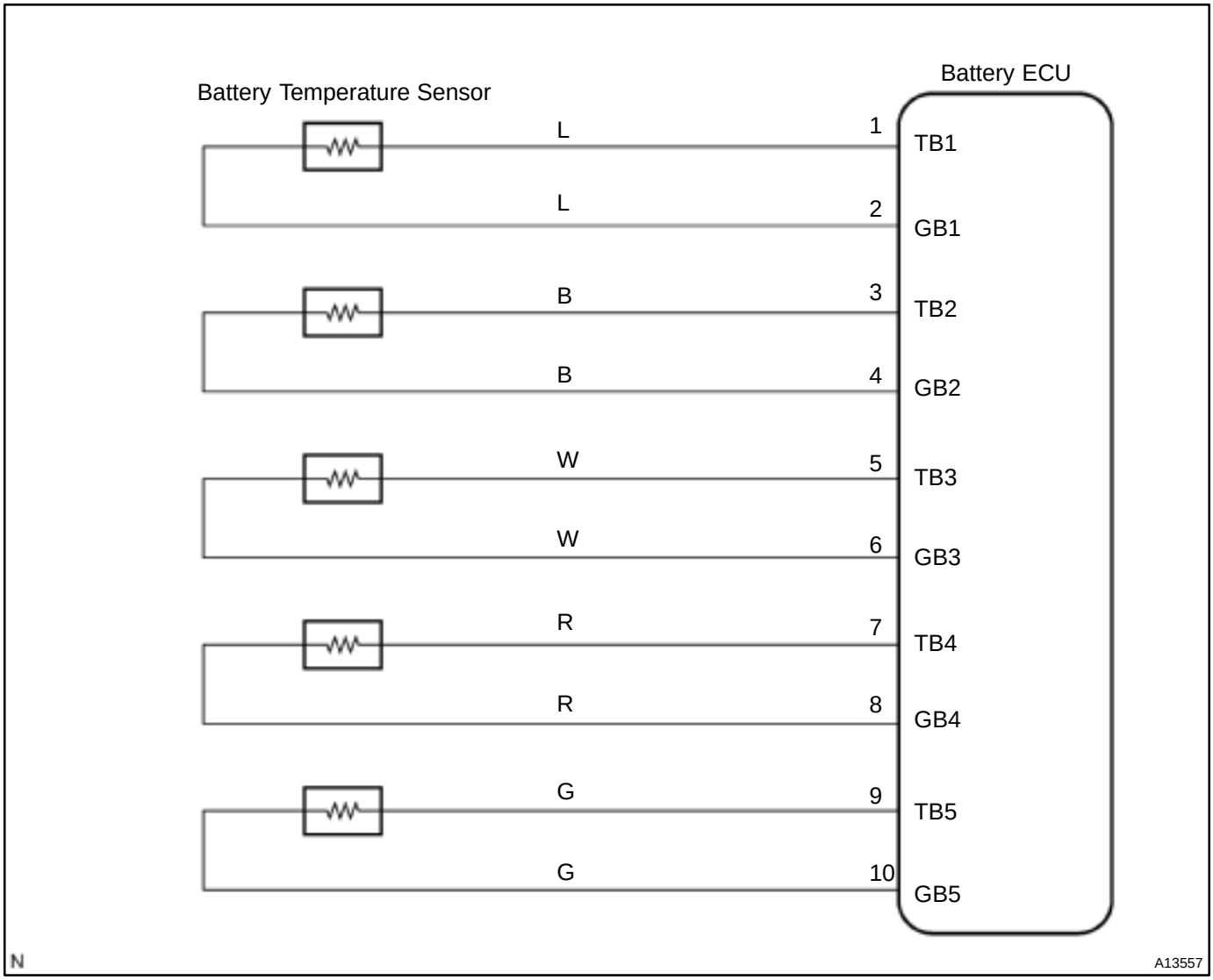

INSPECTION PROCEDURE

1	**Are there any other codes (besides DTC P3060) being output?**

YES → **Go to relevant DTC chart.**

NO

2	**Check resistance of battery temperature sensor.**

PREPARATION:

(a) Remove the battery cover (See page HV–5).

(b) Disconnect the battery temperature sensor connector.

CHECK:

Using an ohmmeter, measure the resistance between terminals.

OK:

Standard resistance:

Terminals	Resistance (at 25 °C (77°F)
1 – 2	9 – 11 kΩ
3 – 4	9 – 11 kΩ
5 – 6	9 – 11 kΩ
7 – 8	9 – 11 kΩ
9 – 10	9 – 11 kΩ

NG → **Replace the battery temperature sensor.**

OK

Check fitting of battery temperature sensor connector and correct if necessary.

DI82G–01

DTC	P3077	Battery Cooling Fan Motor Circuit Malfunction

CIRCUIT DESCRIPTION

To control rise in battery temperature during driving and charging, the battery fan operation is controlled in 3 levels depending on battery temperature.

DTC No.	DTC Detecting Condition	Trouble Area
P3077	Electric error in battery cooling fan motor circuit continues for 10 sec. (2 trip detection logic)	• Battery blower motor • Battery fan relay • Battery blower motor controller • Wire harness

WIRING DIAGRAM

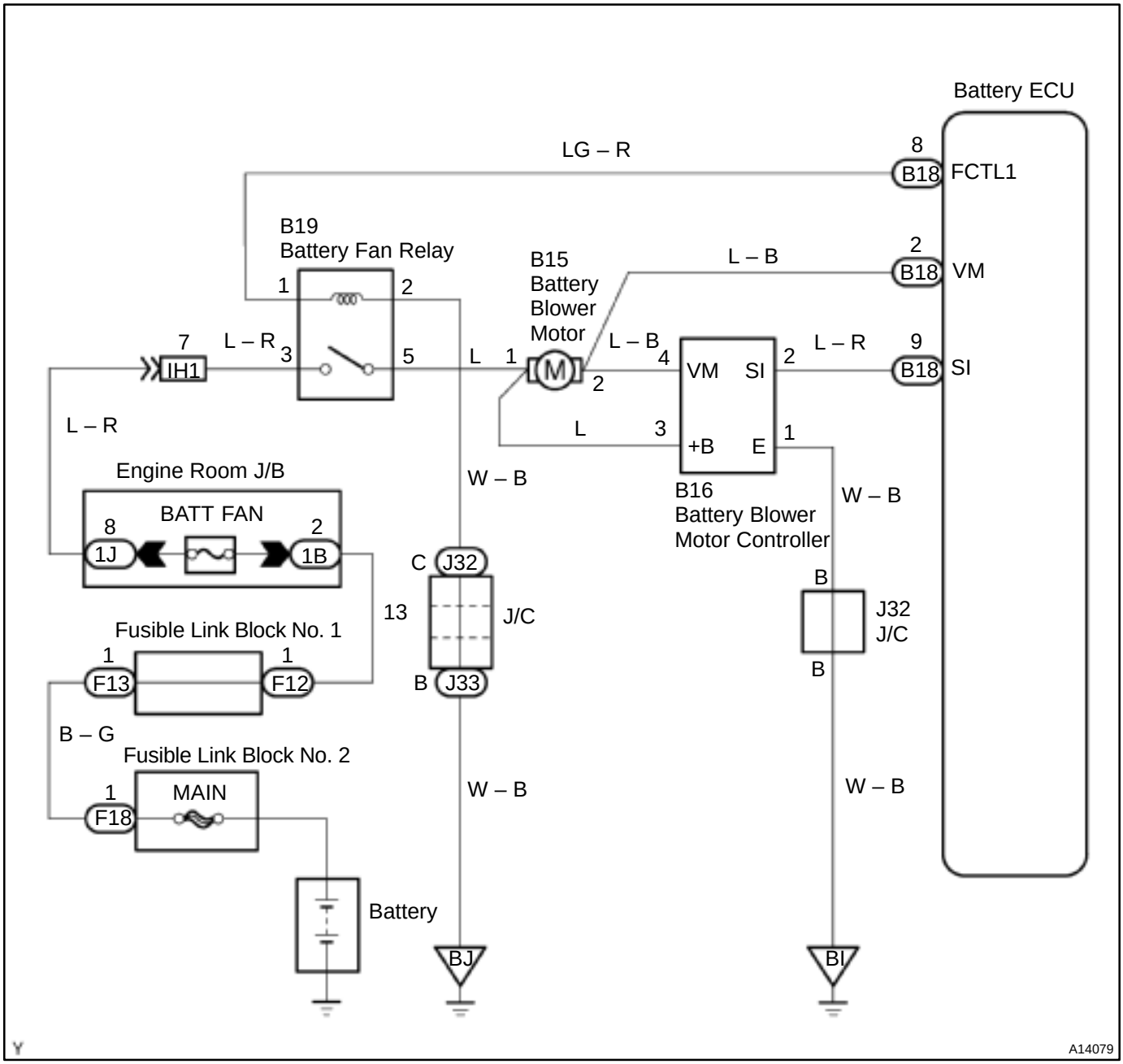

INSPECTION PROCEDURE

1	**Check FAN fuse of engine room J/B.**

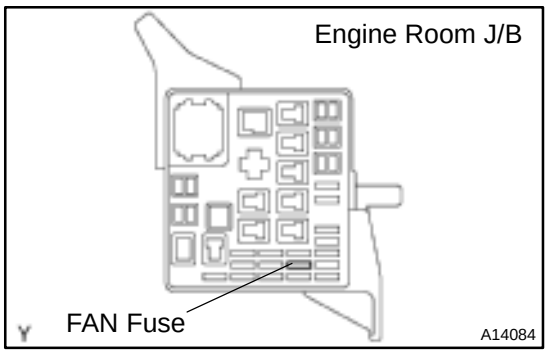

PREPARATION:
Remove the FAN fuse from the engine room J/B.
CHECK:
Check the continuity of the FAN fuse.
OK:
Continuity

NG → **Check for short in all harness and components connected to FAN fuse. Check that the motor is not locked. If locked, replace the motor.**

OK

2	**Check blower fan relay (See page HV–35).**

NG → **Replace the blower fan relay.**

OK

3	**Check blower motor operation.**

PREPARATION:
Remove the blower motor (See page HV–32).
CHECK:
Apply battery voltage to the power supply terminal of the motor, and check the fan rotation.
OK:
The fan rotates normally.

NG → **Replace the blower motor.**

OK

Replace battery blower motor controller.

DI82H–01

DTC	P3115	HV Battery Current Sensor Malfunction

CIRCUIT DESCRIPTION

The battery ECU inputs signals from a current sensor in the system main relay and controls the output current.

DTC No.	DTC Detecting Condition	Trouble Area
P3115	Failure or open circuit in battery current sensor. (2 trip detection logic)	• System main relay (Battery current sensor) • Wire harness

WIRING DIAGRAM

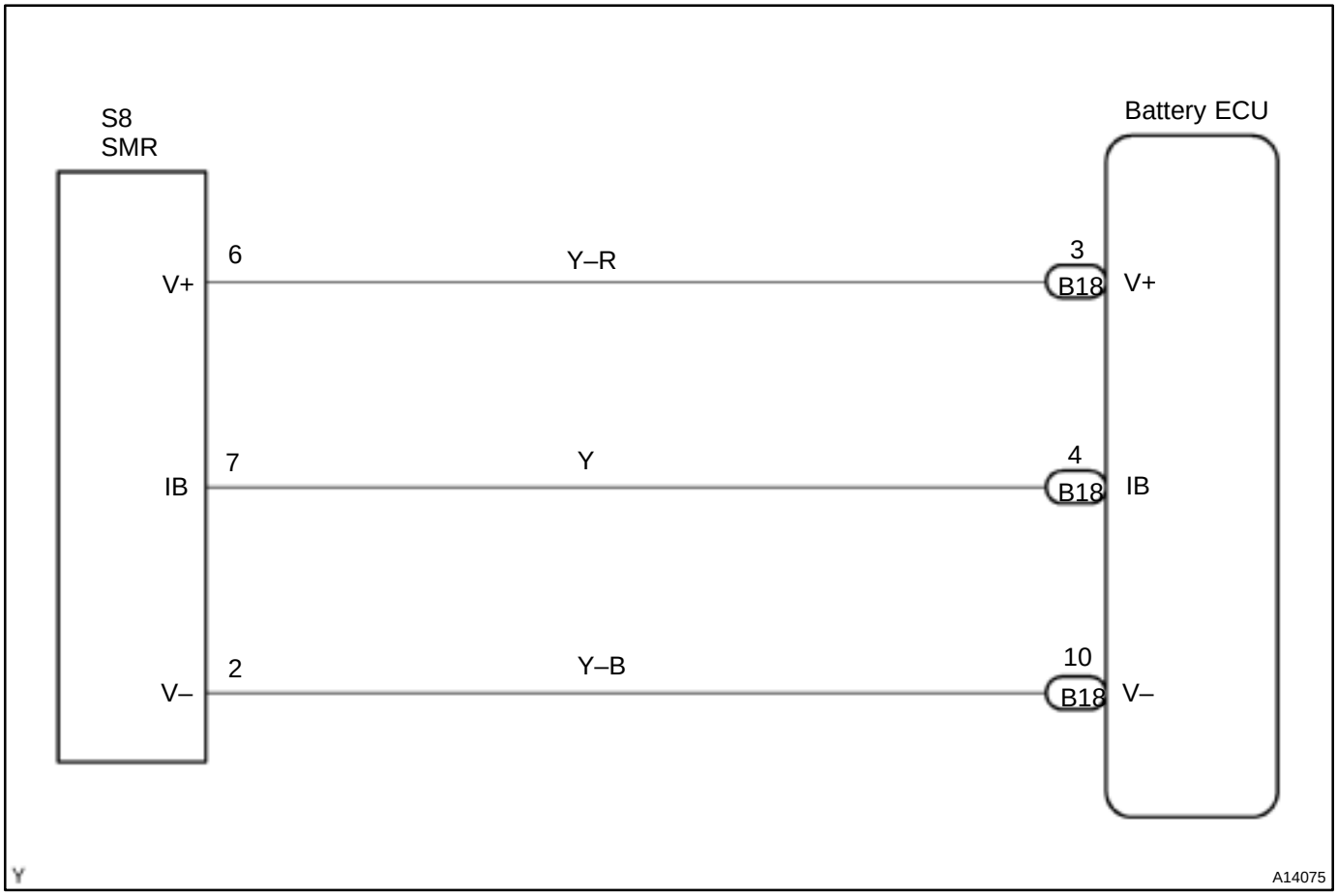

INSPECTION PROCEDURE

1	**Are there any other codes (besides DTC P3115) being output?**

YES → **Go to relevant DTC chart.**

NO

2	**Check for open and short in wire harness between HV ECU terminals (V+, IB V–) and system main relay terminals (6, 7, 2).**

PREPARATION:

(a) Disconnect the connector from the battery ECU.

(b) Disconnect the connector from the system main relay.

CHECK:

Check that the wire harness between the battery ECU and the system main relay is short and open.

OK:

No short and open

NG → **Repair or replace the wire harness.**

OK

3	Check resistance of HV battery current sensor (In system main relay).

CHECK:

Using an ohmmeter, measure the resistance between terminals.

OK:

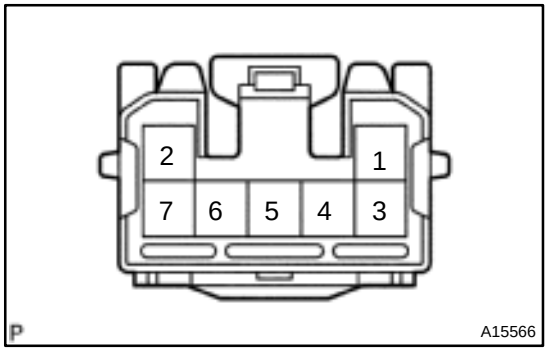

Standard resistance:

Terminal No. (Tester+)	Terminal No. (Tester–)	Resistance
6	7	30 – 50 kΩ
6	2	More than 10 MΩ
7	6	30 – 50 kΩ
7	2	More than 10 MΩ
2	6	300 – 400 kΩ
2	7	3 – 5 MΩ

NG → **Replace the system main relay.**

OK

Check fitting of connector S8 of system main relay and correct if necessary.

DI7OJ–01

PRE–CHECK

1. PRECAUTION

(a) To distinguish trouble and repair it, perform necessary electrical shock prevention operation (See page IN–4).

(b) Some portions of the wiring harness belong to the 288 V circuit, to which a high voltage is supplied. To avoid receiving an electrical shock, be sure to observe the following:

(1) Wear insulating gloves during inspection.

(2) Before removing or installing parts and connectors, remove the service plug and conform that the voltage at the output terminals has dropped down to 0 V.

(3) When disengaging wiring connectors, hold the connector bodies to avoid pulling the wires. When engaging wiring connectors, be sure to engage them securely.

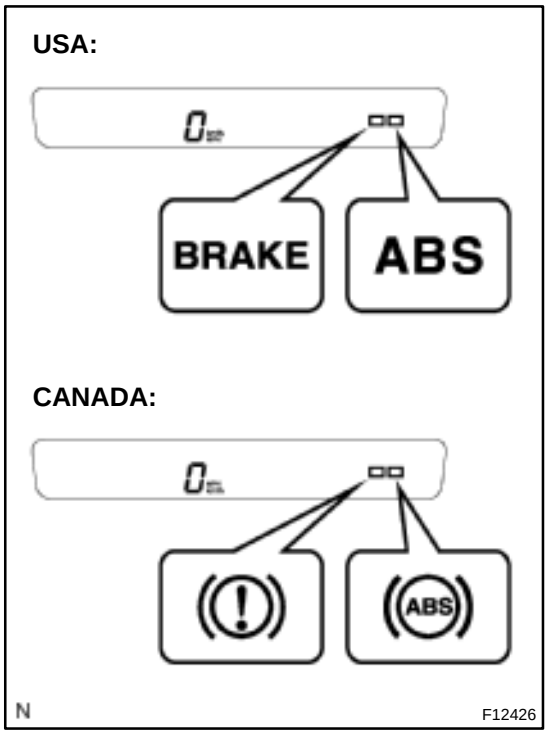

2. DIAGNOSIS SYSTEM

(a) Release the parking brake pedal.

(b) Check the indicator.
When the ignition switch is turned ON, check that the ABS warning light and BRAKE warning light goes on for approx. 3 seconds.

HINT:

- When the parking brake is applied or the level of the brake fluid is low, the BRAKE warning light is lit.
- If the indicator check result is not normal, proceed to troubleshooting for the ABS warning light circuit or BRAKE warning light circuit (See page DI–437 or DI–441).

(c) Check the warning buzzer.
When depressing the brake pedal repeatedly it may turn on the brake warning buzzer.

HINT:

If the warning buzzer check result is not normal, proceed to troubleshooting for the brake warning buzzer circuit (See page DI–444).

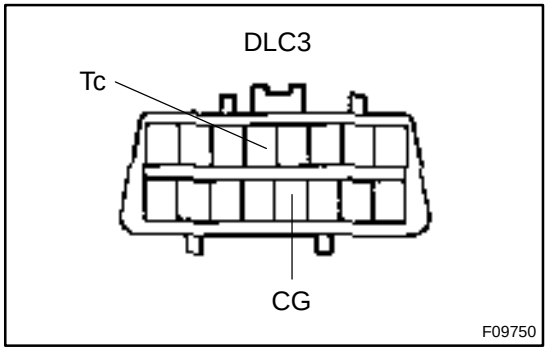

(d) In case of not using TOYOTA hand–held tester:
Check the DTC.

(1) Using SST, connect terminals Tc and CG of DLC3.
SST 09843–18040

(2) Turn the ignition switch ON.

(3) Read the DTC from the ABS warning light on the combination meter.

HINT:

- If no code appears, inspect the diagnostic circuit or ABS warning light circuit (See page DI–437 or DI–447).

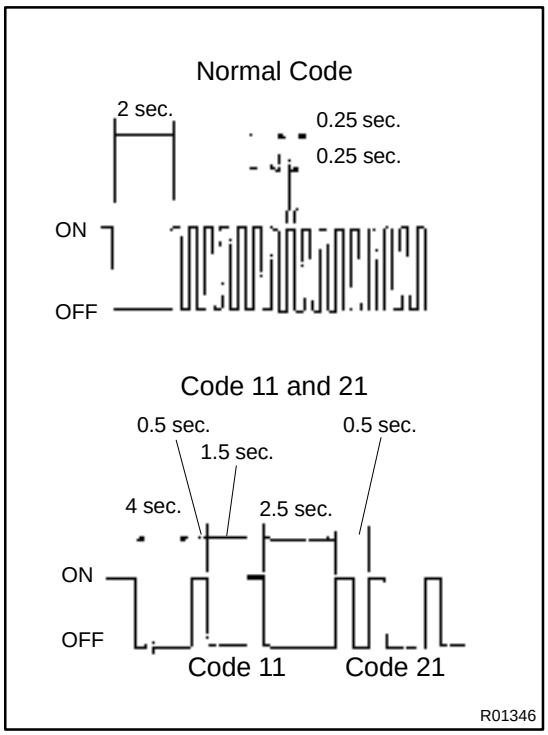

- As an example, the blinking patterns for normal code and codes 11 and 21 are shown on the left.
  (4) Codes are explained in the code table on page DI–358.
  (5) After completing the check, disconnect terminals Tc and CG, and turn off the display.

If 2 or more malfunctions are indicated at the same time the lowest numbered DTC will be displayed 1st.

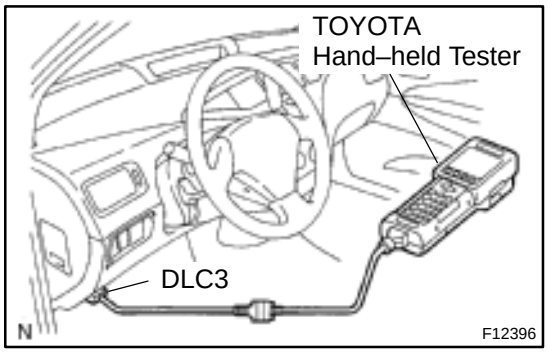

(e) In case of using TOYOTA hand–held tester:
Check the DTC.
(1) Hook up the TOYOTA hand–held tester to the DLC3.
(2) Turn the ignition switch ON.
(3) Read the DTC by following the prompts on the tester screen.

HINT:
Please refer to the TOYOTA hand–held tester operator's manual for further details.

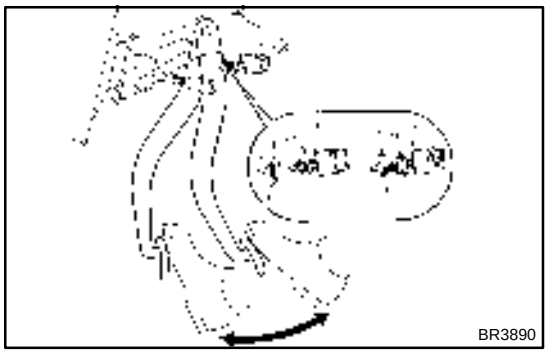

(f) In case of not using TOYOTA hand–held tester:
Clear the DTC.
(1) Using SST, connect terminals Tc and CG of DLC3.
SST 09843–18040
(2) Turn the ignition switch ON.
(3) Clear the DTC stored in ECU by depressing the brake pedal 8 or more times within 5 seconds.
(4) Check that the warning light shows the normal code.
(5) Remove the SST from the terminals of DLC3.
SST 09843–18040

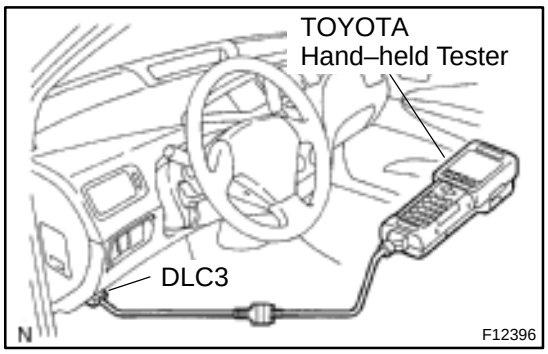

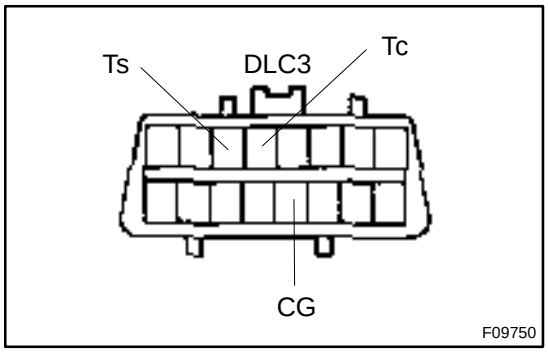

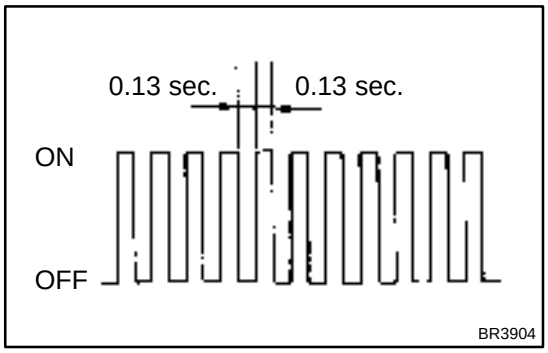

(g) In case of using TOYOTA hand–held tester:
Clear the DTC.
(1) Hook up the TOYOTA hand–held tester to the DLC3.
(2) Turn the ignition switch ON.
(3) Operate the TOYOTA hand–held tester to erase the codes.

HINT:
Please refer to the TOYOTA hand–held tester operator's manual for further details.

3. SENSOR SIGNAL CHECK (TEST MODE)

HINT:
If the ignition switch is turned from ON to ACC or LOCK during test mode, DTC will be erased.

(a) In case of not using TOYOTA hand–held tester:
Check the sensor signal.
(1) Turn the ignition switch OFF.
(2) Using SST, connect terminals Ts and CG of DLC3.
SST 09843–18040
(3) Start the engine.
(4) Check that the ABS warning light blinks.

HINT:
If the ABS warning light does not blink, inspect the ABS warning light circuit and Ts terminal circuit (See page DI–437, DI–449).

(5) Keep the vehicle in the stationary condition and the brake pedal in free condition for 1 sec. or more.
(6) Keeping the vehicle in the stationary condition, depress the brake pedal with 98 N (10 kgf, 22 lbf) or more for 1 sec. or more.
(7) Drive vehicle straight forward.
When driving the vehicle at the speed faster than 45 km/h (28 mph) for several seconds, check that the ABS warning light comes off.

HINT:
There is a case that the sensor check is not completed if the vehicle has its front wheels spun or its steering wheel steered during this check.

(8) Stop the vehicle.
(9) Using SST, connect terminals Tc and CG of DLC3.
SST 09843–18040
(10) Read the number of blinks of the ABS warning light.

HINT:

- See the list of DTC shown on the next page.
- If every sensor is normal, a normal code is output (A cycle of 0.25 sec. ON and 0.25 sec. OFF is repeated).
- If 2 or more malfunctions are indicated at the same time, the lowest numbered code will be displayed 1st.

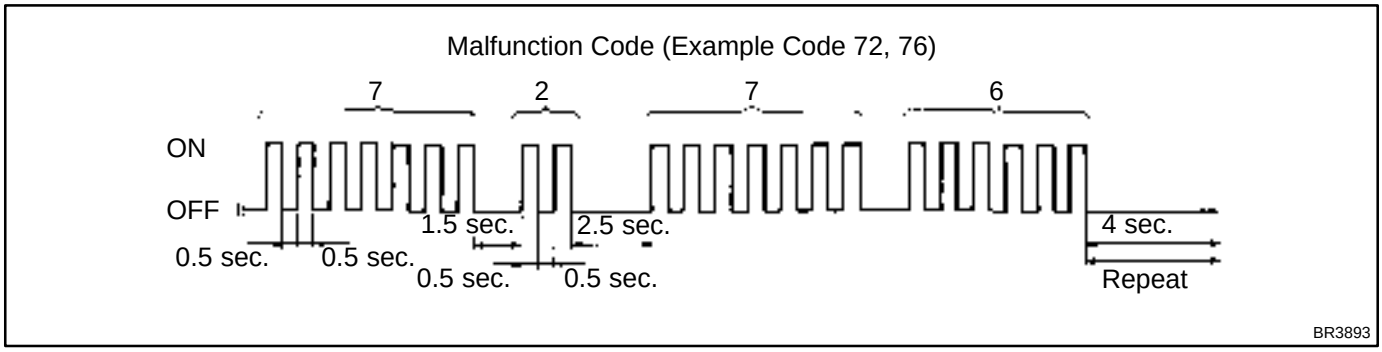

(11) After doing the check, turn ignition switch OFF, and disconnect the SST from terminals Ts and CG, Tc and CG of DLC3.
SST 09843–18040

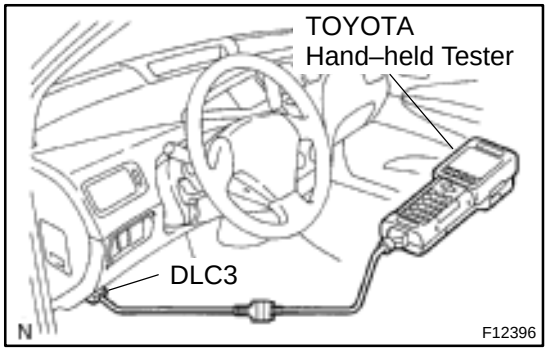

(b) In case of using TOYOTA hand–held tester:
Check the DTC.
(1) Hook up the TOYOTA hand–held tester to the DLC3.
(2) Do step (3) to (8) on the previous page and this page.
(3) Read the DTC by following the prompts on the tester screen.

HINT:
Please refer to the TOYOTA hand–held tester operator's manual for further details.

DTC of sensor check function:

Code No.	Diagnosis	Trouble Area
C1271/71	Low output voltage of right front speed sensor	• Right front speed sensor • Sensor installation • Right front speed sensor rotor
C1272/72	Low output voltage of left front speed sensor	• Left front speed sensor • Sensor installation • Left front speed sensor rotor
C1273/73	Low output voltage of right rear speed sensor	• Right rear speed sensor • Sensor installation • Right rear speed sensor rotor
C1274/74	Low output voltage of left rear speed sensor	• Left rear speed sensor • Sensor installation • Left rear speed sensor rotor
C1275/75	Abnormal change in output voltage of right front speed sensor	Right front speed sensor rotor
C1276/76	Abnormal change in output voltage of left front speed sensor	Left front speed sensor rotor
C1277/77	Abnormal change in output voltage of right rear speed sensor	Right rear speed sensor rotor
C1278/78	Abnormal change in output voltage of left rear speed sensor	Left rear speed sensor rotor
C1281/81	Master cylinder (M/C) pressure sensor output signals is faulty	Master cylinder (M/C) pressure sensor
C1282/82	Regulator (REG) pressure sensor output signal is faulty	Regulator (REG) pressure sensor
C1283/83	Front (FR) pressure sensor output signal is faulty	Front (FR) pressure sensor
C1284/84	Rear (RR) pressure sensor output signal is faulty	Rear (RR) pressure sensor

DI28U–10

DIAGNOSTIC TROUBLE CODE CHART

NOTICE:

When removing the part, turn the ignition switch OFF.

HINT:

- Using SST 09843–18040, connect the terminals Tc and CG of DLC3.
- If any abnormality is not found when inspecting parts, inspect the ECU.
- If a malfunction code is displayed during the DTC check, check the circuit listed that code. For details of each code, turn to the page referred to under the ”See page” for respective ”DTC No.” in the DTC chart.

DTC No. (See Page)	Detection Item	Trouble Area
C0200/31*1 (DI–366)	Right front wheel speed sensor signal malfunction	• Right front, left front, right rear and left rear speed sensor • Each speed sensor circuit • Sensor rotor
C0205/32*1 (DI–366)	Left front wheel speed sensor signal malfunction	
C0210/33*1 (DI–366)	Right rear wheel speed sensor signal malfunction	
C0215/34*1 (DI–366)	Left rear wheel speed sensor signal malfunction	
C0226/21 (DI–373)	Malfunction in ABS solenoid (SFR) circuit	• SFRR or SFRH circuit • Brake actuator
C0236/22 (DI–373)	Malfunction in ABS solenoid (SFL) circuit	• SFLR or SFLH circuit • Brake actuator
C0246/23 (DI–373)	Malfunction in ABS solenoid (SR) circuit	• SRR or SRH circuit • Brake actuator
C0278/11 (DI–376)	Open circuit in ABS solenoid relay circuit	• ABS solenoid relay • ABS solenoid relay circuit
C0279/12 (DI–376)	Short circuit in ABS solenoid relay circuit	
C1202/58 (DI–380)	Brake fluid level low Open circuit in brake fluid level warning switch circuit	• Brake fluid level • Brake fluid level warning switch • Brake fluid level warning switch circuit
C1211/61 (DI–382)	Malfunction in linear solenoid (SLA) circuit	• SLA+ or SLA– circuit • Brake actuator
C1212/62 (DI–382)	Malfunction in linear solenoid (SLR) circuit	• SLR+ or SLR– circuit • Brake actuator
C1213/63 (DI–384)	Malfunction in HV ECU communication circuit	• HVI+ or HVI– circuit • HVO+ or HVO– circuit • HV ECU
C1214/64 (DI–386)	Malfunction in hydraulic system	• Each pressure sensor • Each pressure sensor circuit • Fluid leakage
C1215/15 (DI–387)	Low positive voltage of linear solenoid	• Battery • Charging system • Power source circuit
C1216/16 (DI–387)	High positive voltage of linear solenoid	
C1217/25 (DI–373)	Malfunction in regenerative solenoid (SMC1) circuit	• Regenerative solenoid (SMC1) circuit • Brake actuator
C1218/26 (DI–373)	Malfunction in regenerative solenoid (SMC2) circuit	• Regenerative solenoid (SMC2) circuit • Brake actuator

C1219/27 (DI–373)	Malfunction in regenerative solenoid (SS) circuit	• Regenerative solenoid (SS) circuit • Brake actuator
C1220/46 (DI–392)	Malfunction in regulator (REG) pressure sensor	• Each pressure sensor • Each pressure sensor circuit • Brake actuator
C1221/46 (DI–392)	Malfunction in front (FR) pressure sensor	
C1222/46 (DI–392)	Malfunction in rear (RR) pressure sensor	
C1241/41 (DI–397)	Low or abnormally high battery positive voltage in IG1 circuit	• Battery • Charging system • Power source circuit
C1242/42*2 (DI–400)	Open circuit in IG2 circuit	• Battery • Charging system • Power source circuit
C1246/46 (DI–392)	Malfunction in master cylinder (M/C) pressure sensor	• Master cylinder (M/C) pressure sensor • Master cylinder (M/C) pressure sensor circuit
C1249/49 (DI–403)	Open circuit in stop light switch circuit	• Stop light switch • Stop light switch circuit
C1251/51*2 (DI–406)	Malfunction in hydraulic brake booster pump motor	Hydraulic brake booster pump motor
C1252/52*2 (DI–409)	Hydraulic brake booster pump motor ON time abnormally long	• Hydraulic brake booster pump motor • Hydraulic brake booster pump motor circuit • Pressure switch (PH or PL)
C1253/53*2 (DI–416)	Malfunction in hydro motor relay circuit	• Hydro motor relay • Hydro motor relay circuit
C1254/54*2 (DI–421)	Malfunction in pressure switch	• Pressure switch (PH or PL) • Pressure switch circuit
C1256/56*2 (DI–424)	Malfunction of accumulator low pressure	• Accumulator • Pressure switch (PH or PL) • Hydraulic brake booster pump motor
C1257/57*2 (DI–430)	Malfunction in power supply drive circuit	• Battery • Power Source circuit
C1259/59 (DI–433)	Malfunction in regenerative of HV ECU	• HV control system • HV ECU
Always ON (DI–434)	Malfunction in brake ECU	• Battery • Charging system • Power source circuit • Brake ECU

*1: As the DTC cannot be erased by replacing parts alone do either of the following operations.

(1) Clear DTC (See page DI–353).

(2) At the vehicle speed of 20 km/h (12 mph), drive the vehicle for 30 sec. or more.

*2: Using the following table, troubled parts can be specified.

Table of Trouble Part and DTC:

DTC		C1242/42		C1251/51		C1252/52		C1253/53		C1254/54		C1256/56		C1257/57	
BRAKE warning light and buzzer		Light	Buzzer	Light	Buzzer	Light	Buzzer	Light	Buzzer	Light	Buzzer	Light	Buzzer	Light	Buzzer
Pressure switch	PH					○	○			○		○	○		
	PL					○	○			○		○	○		
Pump motor circuit	Pump motor			○	○							○	○		
	MTT wire harness					○	○	○							
	MT+ wire harness			○											
	MT– wire harness			○											
Accumulator malfunction												○	○		
Motor relay circuit	MR1 open circuit							○							
	MR2 open circuit							○							
	MR1 welded contact					○	○	○							
	MR2 welded contact					○	○	○							
Hydraulic brake booster	Pressure leaks					○	○					○	○		
Power source*	IG2 open circuit	○													
ECU	Power suplly circuit													○	

*: When IG1 circuit is open, ABS warning light and BRAKE warning light come on.

DI1GG–06

TERMINALS OF ECU

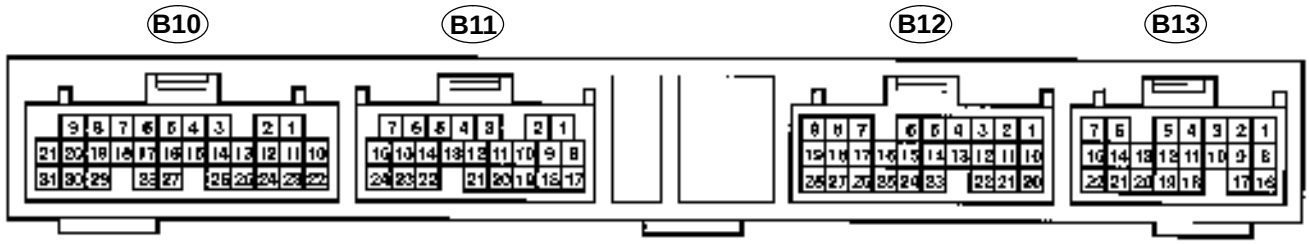

F02094

Symbols (Terminals No.)	Wiring Color	Condition	STD Voltage (V)
SFRH (B10 – 1) – GND (B10 – 6, 31, B11 – 8, 17)	R–B ↔ W–B	IG switch ON, ABS warning light OFF	10 – 14
SFRR (B10 – 2) – GND (B10 – 6, 31, B11 – 8, 17)	R–W ↔ W–B	IG switch ON, ABS warning light OFF	10 – 14
SMC2 (B10 – 3) – GND (B10 – 6, 31, B11 – 8, 17)	G–B ↔ W–B	IG switch ON, ABS warning light OFF (Brake pedal released)	10 – 14
SMC1 (B10 – 4) – GND (B10 – 6, 31, B11 – 8, 17)	G–W ↔ W–B	IG switch ON, ABS warning light OFF (Brake pedal released)	10 – 14
SS (B10 – 5) – GND (B10 – 6, 31, B11 – 8, 17)	G–O ↔ W–B	IG switch ON, ABS warning light OFF (Brake pedal released)	10 – 14
SFLR (B10 – 7) – GND (B10 – 6, 31, B11 – 8, 17)	R–G ↔ W–B	IG switch ON, ABS warning light OFF	10 – 14
SRRH (B10 – 8) – GND (B10 – 6, 31, B11 – 8, 17)	R–Y ↔ W–B	IG switch ON, ABS warning light OFF	10 – 14
SRRR (B10 – 9) – GND (B10 – 6, 31, B11 – 8, 17)	R–L ↔ W–B	IG switch ON, ABS warning light OFF	10 – 14
VCM (B10 – 10) – GND (B10 – 6, 31, B11 – 8, 17)	B ↔ W–B	IG switch ON	4.5 – 5.5
PH (B10 – 11) – GND (B10 – 6, 31, B11 – 8, 17)	GR ↔ W–B	Vehicle stops, pump motor rotates	5 – 7
		Vehicle stops, pump motor stops	Below 1.0
SG1 (B10 – 12) – GND (B10 – 6, 31, B11 – 8, 17)	Shielded ↔ W–B	IG switch OFF	Continuity
FR+ (B10 – 14) – FR– (B10 – 13)	P ↔ L	IG switch ON, slowly turn right front wheel	Pulse generation
FL+ (B10 – 16) – FL– (B10 – 15)	R ↔ G	IG switch ON, slowly turn left front wheel	Pulse generation
MT– (B10 – 18) – GND (B10 – 6, 31, B11 – 8, 17)	Y ↔ W–B	IG switch OFF	Continuity
SR (B10 – 19) – GND (B10 – 6, 31, B11 – 8, 17)	B–L ↔ W–B	IG switch ON, ABS warning light OFF	Below 1.5
SFLH (B10 – 21) – GND (B10 – 6, 31, B11 – 8, 17)	Y–B ↔ W–B	IG switch ON, ABS warning light OFF	10 – 14
PMC (B10 – 22) – GND (B10 – 6, 31, B11 – 8, 17)	W ↔ W–B	IG switch ON, stop light switch OFF	Below 1.0
E2 (B10 – 23) – GND (B10 – 6, 31, B11 – 8, 17)	R ↔ W–B	IG switch OFF	Continuity
FSS (B10 – 24) – GND (B10 – 6, 31, B11 – 8, 17)	BR ↔ W–B	IG switch OFF	Continuity

MTT (B10 – 27) – GND (B10 – 6, 31, B11 – 8, 17)	W–L ↔ W–B	IG switch ON, pump motor rotates	Above 8.0
		IG switch ON, pump motor stops	Below 1.5
MT+ (B10 – 28) – GND (B10 – 6, 31, B11 – 8, 17)	Y–G ↔ W–B	IG switch ON (Motor relay is OFF)	Below 1.5
MR1 (B10 – 29) – GND (B10 – 6, 31, B11 – 8, 17)	LG–R ↔ W–B	IG switch ON, ABS motor stops	10 – 14
STP (B11 – 1) – GND (B10 – 6, 31, B11 – 8, 17)	G–W ↔ W–B	Stop light switch OFF	Below 1.5
		Stop light switch ON	8 – 14
SP1 (B11 – 2) – GND (B10 – 6, 31, B11 – 8, 17)	V–R ↔ W–B	Vehicle driving at about 30 km/h (19 mph)	Pulse generation
Tc (B11 – 3) – GND (B10 – 6, 31, B11 – 8, 17)	P–B ↔ W–B	IG switch ON	10 – 14
Ts (B11 – 4) – GND (B10 – 6, 31, B11 – 8, 17)	GR–G ↔ W–B	IG switch ON	10 – 14
BRL (B11 – 5) – GND (B10 – 6, 31, B11 – 8, 17)	R–Y ↔ W–B	IG switch OFF → ON (Parking brake switch OFF)	10 – 14 for about 3 sec., then Below 2
IG1 (B11 – 6) – GND (B10 – 6, 31, B11 – 8, 17)	B–Y ↔ W–B	IG switch ON	10 – 14
R1+ (B11 – 7) – GND (B10 – 6, 31, B11 – 8, 17)	Y–B ↔ W–B	IG switch ON	10 – 14
D/G (B11 – 10) – GND (B10 – 6, 31, B11 – 8, 17)	W–L ↔ W–B	IG switch ON	10 – 14
RR+ (B11 – 11) – RR– (B11 – 12)	Y ↔ BR	IG switch ON, slowly turn right rear wheel	Pulse generation
HVO+ (B11 – 14) – GND (B10 – 6, 31, B11 – 8, 17)	G ↔ W–B	IG switch ON	About 2.5
RLO (B11 – 15) – GND (B10 – 6, 31, B11 – 8, 17)	W ↔ W–B	Vehicle driving at about 30 km/h (19 mph)	Pulse generation
HVI– (B11 – 16) – GND (B10 – 6, 31, B11 – 8, 17)	V ↔ W–B	IG switch ON	About 2.5
WA (B11 – 18) – GND (B10 – 6, 31, B11 – 8, 17)	B–W ↔ W–B	IG switch ON, ABS warning light ON	10 – 14
		IG switch ON, ABS warning light OFF	Below 2.0
RL+ (B11 – 19) – RL– (B11 – 20)	P ↔ L	IG switch ON, slowly turn left rear wheel	Pulse generation
RSS (B11 – 21) – GND (B10 – 6, 31, B11 – 8, 17)	BR–B ↔ W–B	IG switch OFF	Continuity
HVO– (B11 – 22) – GND (B10 – 6, 31, B11 – 8, 17)	R ↔ W–B	IG switch ON	About 2.5
RRO (B11 – 23) – GND (B10 – 6, 31, B11 – 8, 17)	B ↔ W–B	Vehicle driving at about 30 km/h (19 mph)	Pulse generation
HVI+ (B11 – 24) – GND (B10 – 6, 31, B11 – 8, 17)	LG ↔ W–B	IG switch ON	About 2.5
IG2 (B12 – 1) – GND (B10 – 6, 31, B11 – 8, 17)	B–W ↔ W–B	IG switch ON	10 – 14
LBL (B12 – 7) – GND (B10 – 6, 31, B11 – 8, 17)	LG–R ↔ W–B	IG switch ON, fluid in master cylinder reservoir above MIN level	4.5 – 6.4
VFR (B12 – 9) – GND (B10 – 6, 31, B11 – 8, 17)	B ↔ W–B	IG switch ON	4.5 – 5.5
PKB (B12 – 13) – GND (B10 – 6, 31, B11 – 8, 17)	R–Y ↔ W–B	IG switch ON, parking brake switch ON	Below 1.5
		IG switch ON, parking brake switch OFF	10 – 14

SG2 (B12 – 15) – GND (B10 – 6, 31, B11 – 8, 17)	Shielded ↔ W–B	IG switch OFF	Continuity
VREG (B12 – 16) – GND (B10 – 6, 31, B11 – 8, 17)	B ↔ W–B	IG switch ON	4.5 – 5.5
SG3 (B12 – 18) – GND (B10 – 6, 31, B11 – 8, 17)	Shielded ↔ W–B	IG switch OFF	Continuity
BZ (B12 – 20) – GND (B10 – 6, 31, B11 – 8, 17)	G ↔ W–B	IG switch ON, buzzer sounds	Below 1.5
		IG switch ON, buzzer does not sound	10 – 14
EREG (B12 – 24) – GND (B10 – 6, 31, B11 – 8, 17)	R ↔ W–B	IG switch OFF	Continuity
PREG (B12 – 25) – GND (B10 – 6, 31, B11 – 8, 17)	W ↔ W–B	IG switch ON, brake pedal released	Below 1.0
EFR (B12 – 27) – GND (B10 – 6, 31, B11 – 8, 17)	R ↔ W–B	IG switch OFF	Continuity
PFR (B12 – 28) – GND (B10 – 6, 31, B11 – 8, 17)	W ↔ W–B	IG switch ON, brake pedal released	Below 1.0
SLA+ (B13 – 1) – GND (B10 – 6, 31, B11 – 8, 17)	L ↔ W–B	IG switch ON	Pulse generation
MR2 (B13 – 2) – GND (B10 – 6, 31, B11 – 8, 17)	Y–G ↔ W–B	IG switch ON, pump motor rotates	Below 1.0
		IG switch ON, pump motor stops	10 –14
R2+ (B13 – 3) – GND (B10 – 6, 31, B11 – 8, 17)	L–O ↔ W–B	IG switch ON	10 – 14
VRR (B13 – 5) – GND (B10 – 6, 31, B11 – 8, 17)	B ↔ W–B	IG switch ON	4.5 – 5.5
AST (B13 – 6) – GND (B10 – 6, 31, B11 – 8, 17)	B–O ↔ W–B	IG switch ON, ABS warning light OFF	10 – 14
SLR– (B13 – 7) – GND (B10 – 6, 31, B11 – 8, 17)	V ↔ W–B	IG switch ON	Below 1.5
SLA– (B13 – 8) – GND (B10 – 6, 31, B11 – 8, 17)	LG ↔ W–B	IG switch ON	Below 1.5
PL (B13 – 9) – GND (B10 – 6, 31, B11 – 8, 17)	Y–R ↔ W–B	IG switch OFF, depress brake pedal more than 40 times → IG switch ON	6.5 – 10 → 2.5 – 5.0
PRR (B13 – 13) – GND (B10 – 6, 31, B11 – 8, 17)	W ↔ W–B	IG switch ON, brake pedal released	Below 1.0
SLR+ (B13 – 16) – GND (B10 – 6, 31, B11 – 8, 17)	P ↔ W–B	IG switch ON	Pulse generation
SG4 (B13 – 19) – GND (B10 – 6, 31, B11 – 8, 17)	Shielded ↔ W–B	IG switch OFF	Continuity
ERR (B13 – 20) – GND (B10 – 6, 31, B11 – 8, 17)	R ↔ W–B	IG switch OFF	Continuity
+BS (B13 – 22) – GND (B10 – 6, 31, B11 – 8, 17)	L ↔ W–B	IG switch ON	10 – 14

DI7OK–01

CIRCUIT INSPECTION

DTC	C0200/31 – C0215/34	Speed Sensor Circuit

CIRCUIT DESCRIPTION

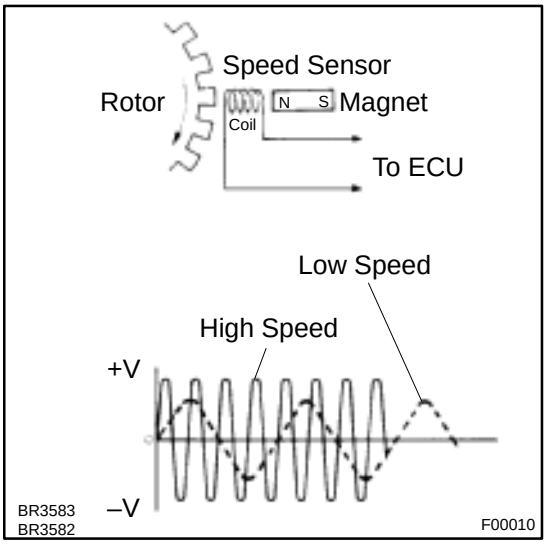

The speed sensor detects wheel speed and sends the appropriate signals to the ECU. These signals are used for control of both the ABS & EBD control system. The front and rear rotors each have 48 serrations.

When the rotors rotate, the magnetic field emitted by the permanent magnet in the speed sensor generates an AC voltage. Since the frequency of this AC voltage changes in direct proportion to the speed of the rotor, the frequency is used by the ECU to detect the speed of each wheel.

DTC No.	DTC Detecting Condition	Trouble Area
C0200/31 C0205/32 C0210/33 C0215/34	Detection of any of conditions 1. through 4.: 1. At vehicle speed of 10 km/h (6 mph) or more, pulses are not input for 15 sec. or more. 2. While a vehicle is driven at a speed of 15 km/h (24 mph) or more, pulse signals from the speed sensor are instantly omitted 7 times or more. 3. While a vehicle is driven at a speed of 20 km/h (32 mph) or more, error signals from the speed sensor are transmitted consecutively 75 time or more within 5 min. 4. When the ignition switch is ON, an open circuit in the speed sensor continues for 0.5 sec. or more.	• Right front, left front, right rear and left rear speed sensor • Each speed sensor circuit • Sensor rotor

HINT:

DTC No. C0200/31 is for the right front speed sensor.
DTC No. C0205/32 is for the left front speed sensor.
DTC No. C0210/33 is for the right rear speed sensor.
DTC No. C0215/34 is for the left rear speed sensor.

WIRING DIAGRAM

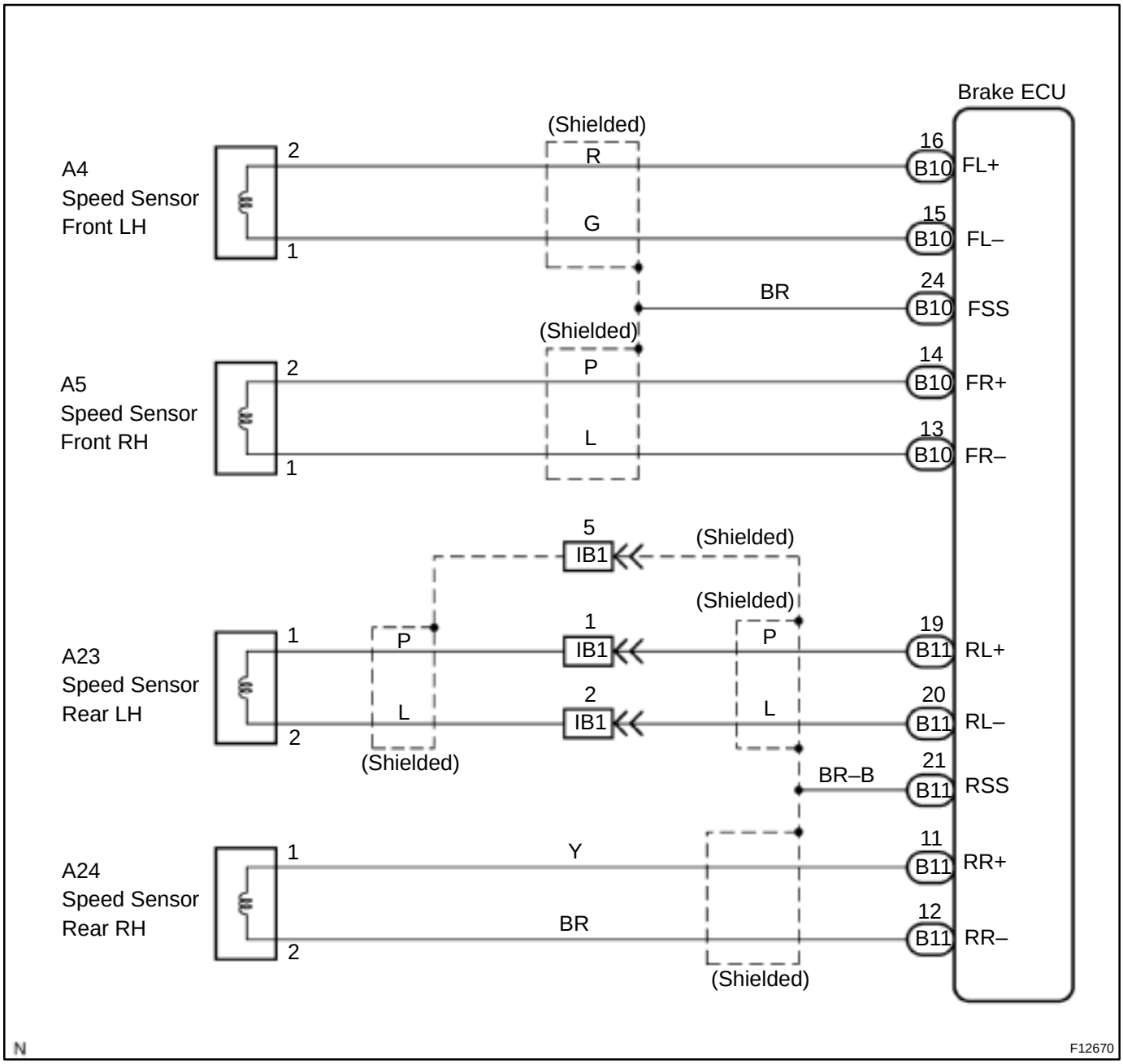

INSPECTION PROCEDURE

HINT:

Start the inspection from step 1 in case of using the TOYOTA hand–held tester and start from step 2 in case of not using the TOYOTA hand–held tester.

1	**Check output value of speed sensor.**

PREPARATION:

(a) Connect the TOYOTA hand–held tester to the DLC3.
(b) Turn the ignition switch ON, and push the TOYOTA hand–held tester main switch ON.
(c) Select the DATALIST mode on the TOYOTA hand–held tester.

CHECK:

Check that there is no difference between the speed value output from the speed sensor displayed on the TOYOTA hand–held tester and the speed value displayed on the speedometer when driving the vehicle.

OK:

There is almost no difference from the displayed speed value.

HINT:

There is tolerance of ± 10 % in the speedometer indication.

OK → **Check and replace brake ECU.**

NG

2	**Check speed sensor.**

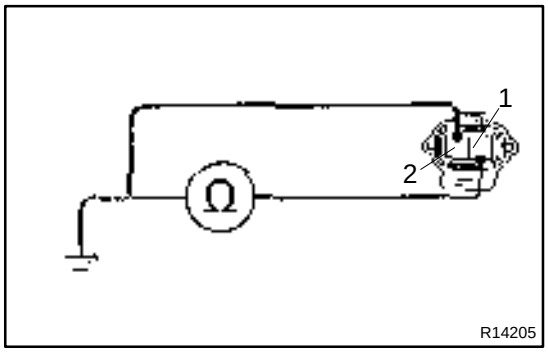

Front:

PREPARATION:

(a) Remove the front fender liner.
(b) Make sure that there is no looseness at the connector lock part and connecting part of the connector.
(c) Disconnect the speed sensor connector.

CHECK:

Measure resistance between terminals 1 and 2 of speed sensor connector.

OK:

Resistance: 0.6 – 2.5 kΩ

CHECK:

Measure resistance between terminals 1 and 2 of speed sensor connector and body ground.

OK:

Resistance: 10 MΩ or higher

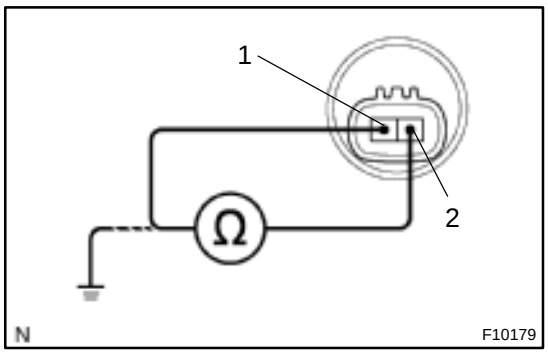

Rear:

PREPARATION:

(a) Make sure that there is no looseness at the connector lock part and connecting part of the connector.

(b) Disconnect the speed sensor connector at hub bearing .

CHECK:

Measure resistance between terminals 1 and 2 of speed sensor connector.

OK:

Resistance: 0.7 – 2.2 kΩ

CHECK:

Measure resistance between terminals 1 and 2 of speed sensor connector and body ground.

OK:

Resistance: 1 MΩ or higher

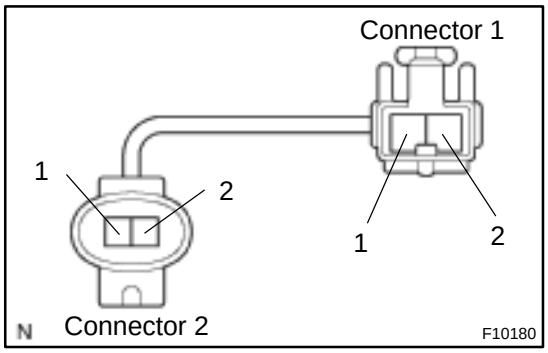

Rear speed sensor sub–wire harness:

PREPARATION:

(a) Remove the seat cushion and seatback.

(b) Make sure that there is no looseness at the connector lock part and connecting part of the connector.

(c) Disconnect the speed sensor connector inside vehicle.

CHECK:

(a) Measure resistance between terminal 1 of connector 1 and terninal 2 of connector 2.

(b) Measure resistance between terminal 2 of connector 1 and terninal 1 of connector 2.

OK:

Resistance: below 1 Ω

CHECK:

Measure resistance between terminals 1 and 2 of speed sensor connector 1 and body ground.

OK:

Resistance: 10 MΩ or higher

NG → **Replace speed sensor or sub–wire harness.**

NOTICE:

Check the speed sensor signal last (See page DI–353).

OK

3	**Check for open and short circuit in harness and connector between each speed sensor and brake ECU (See page IN–41).**

NG → **Repair or replace harness or connector.**

OK

4	**Check speed sensor installation.**

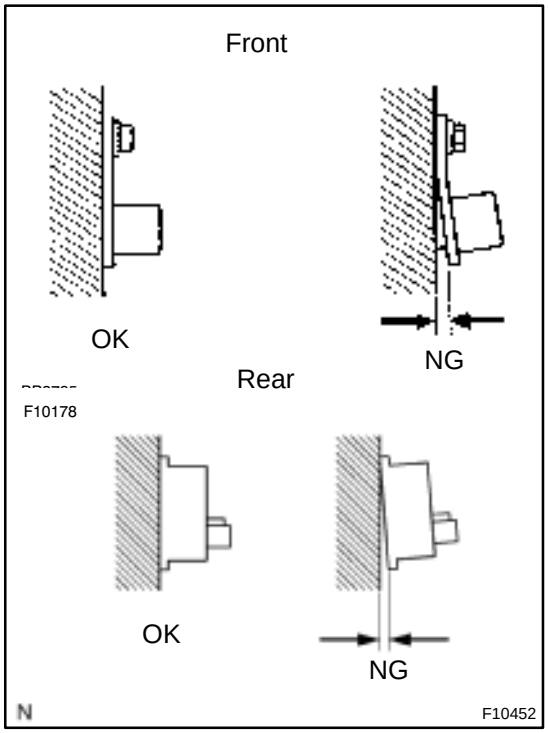

CHECK:
Check the speed sensor installation.
OK:

The installation bolt is tightened properly and there is no clearance between the sensor and steering knuckle or rear axle carrier.
Torque:
Front speed sensor : 8.0 N·m (82 kgf·cm, 71 in.·lbf)

NG → **Replace speed sensor.**

NOTICE:
Check the speed sensor signal last (See page DI–353).

OK

5	Check speed sensor and sensor rotor serrations.

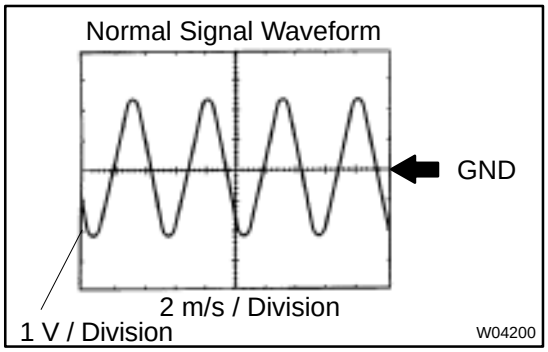

REFERENCE: INSPECTION USING OSCILLOSCOPE

PREPARATION:

(a) Remove the brake ECU with connectors still connected.

(b) Connect the oscilloscope to the terminals FR+, FL+, RR+ or RL+ and GND of the brake ECU.

CHECK:

Drive the vehicle with about 20 km/h (12 mph), and check the signal waveform.

HINT:

- As the vehicle speed (rpm of the wheels) increases, a cycle of the waveform becomes shorter and the fluctuation in the output voltage becomes greater.
- When noise is identified in the waveform on the oscilloscope, error signals are generated due to the speed sensor rotor's scratches, looseness or foreign matter deposited on it.

OK	Check and replace brake ECU.

NG

6	Check sensor rotor and sensor tip.

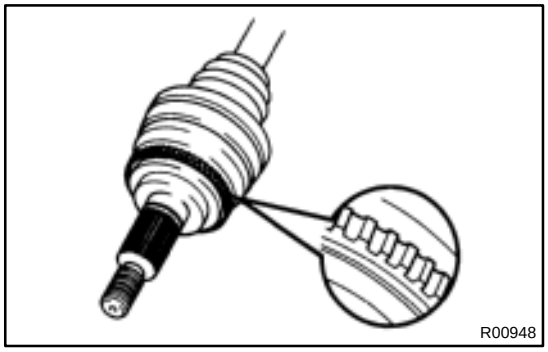

Front:

PREPARATION:

Remove the front drive shaft (See page SA–17).

CHECK:

Check the sensor rotor serrations.

OK:

No scratches or missing teeth or foreign objects.

PREPARATION:

Remove the front speed sensor (See page BR–53).

CHECK:

Check the sensor tip.

OK:

No scratches or foreign objects on the sensor tip.

HINT:

If foreign matter (including that on the sensor rotor side) is identified, remove it and after reassembling, check the output waveform.

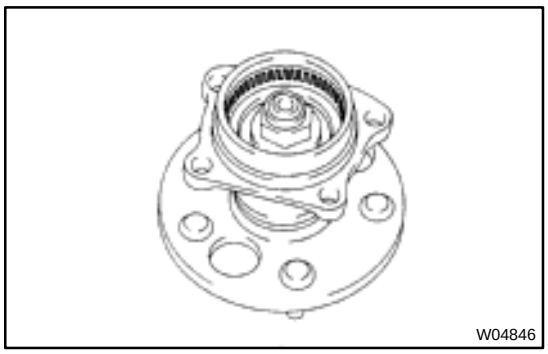

Rear:

PREPARATION:

Remove the rear speed sensor (See page BR–56).

CHECK:

Check the sensor rotor serrations.

OK:

No scratches or missing teeth or foreign objects.

HINT:

If the sensor rotor is damaged or deformed, replace the hub assembly.

CHECK:

Check the sensor tip.

OK:

No scratches or foreign objects on the sensor tip.

HINT:

If foreign matter (including that on the sensor rotor side) is identified, remove it and after reassembling, check the output waveform.

NG → **Replace sensor rotor or speed sensor.**

NOTICE:

Check the speed sensor signal last (See page DI–353).

OK

Check and replace brake ECU.

DI28Z–13

DTC	C0226/21 – C0246/23	ABS Solenoid Circuit

DTC	C1217/25 – C1219/27	Regenerative Solenoid Circuit

CIRCUIT DESCRIPTION

This solenoid goes on when signals are received from the ECU and controls the pressure acting on the wheel cylinders thus controlling the braking force.

DTC No.	DTC Detecting Condition	Trouble Area
C0226/21	Open or short circuit in SFRH or SFRR circuit continues for 0.05 sec. or more.	• SFRH or SFRR circuit • Brake actuator
C0236/22	Open or short circuit in SFLH or SFLR circuit continues for 0.05 sec. or more.	• SFLH or SFLR circuit • Brake actuator
C0246/23	Open or short circuit in SRR or SRH circuit continues for 0.05 sec. or more.	• SRR or SRH circuit • Brake actuator
C1217/25	Open or short circuit in SMC1 circuit continues for 0.05 sec. or more.	• SMC1 circuit • Brake actuator
C1218/26	Open or short circuit in SMC2 circuit continues for 0.05 sec. or more.	• SMC2 circuit • Brake actuator
C1219/27	Open or short circuit in SS circuit continues for 0.05 sec. or more.	• SS circuit • Brake actuator

WIRING DIAGRAM

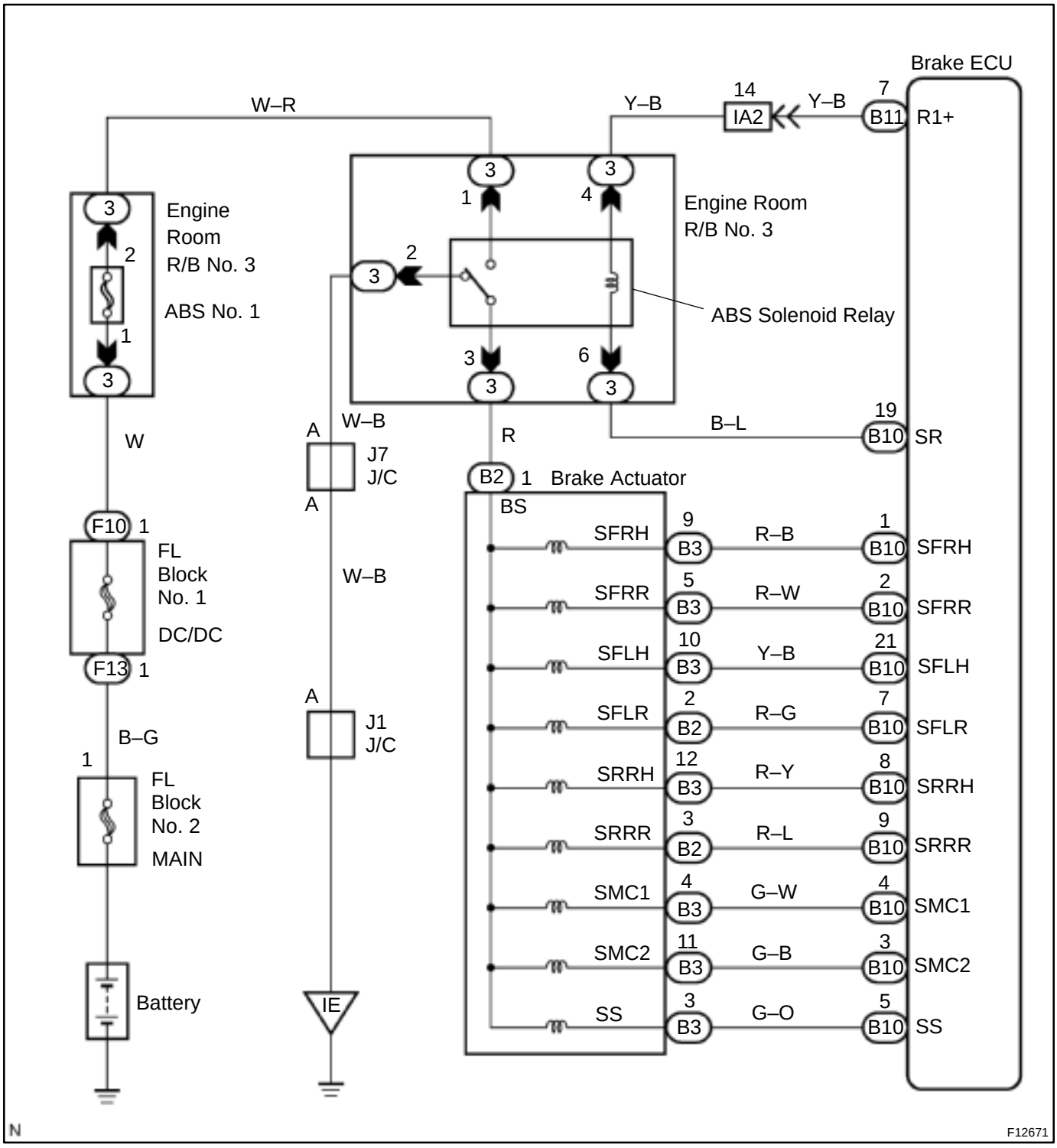

INSPECTION PROCEDURE

1	**Check brake actuator solenoid.**

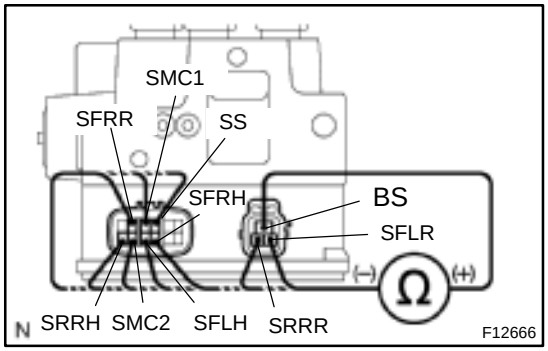

PREPARATION:

Disconnect the 2 connectors from the brake actuator.

CHECK:

Check continuity between the terminal BS and each of terminals SFRH, SFRR, SFLH, SFLR, SRRH, SRRR, SMC1, SMC2 and SS of brake actuator connector.

OK:

Continuity

HINT:

Resistance of each solenoid at 20 ˚C (68 ˚F)

SFRH, SFLH, SRRH: approx. 6.6 Ω

SFRR, SFLR, SRRR: approx. 2.2 Ω

SMC1, SMC2, SS: approx. 16 Ω

NG → **Replace brake actuator.**

OK

2	**Check for open and short circuit in harness and connector between brake ECU and brake actuator (See page IN–41).**

NG → **Repair or replace harness or connector.**

OK

If the same code is still output after the DTC is deleted, check the contact condition of each connection. If the connections are normal, the ECU may be defective.

DI290–08

DTC	C0278/11, C0279/12	ABS Solenoid Relay Circuit

CIRCUIT DESCRIPTION

This relay supplies power to each ABS solenoid. After the ignition switch is turned ON, if the initial check is OK, the relay goes on.

DTC No.	DTC Detecting Condition	Trouble Area
C0278/11	When the terminal SR in brake ECU is 2 V or less, the terminal AST in brake ECU continues to be in other than the range from 10 – 14 V for 0.2 sec. more.	• ABS solenoid relay • ABS solenoid relay circuit
C0279/12	When the voltage of the terminal SR in brake ECU is 10 – 14 V, the terminal AST in brake ECU continues to be in the range from 10 – 14 V for 0.2 sec. more.	

WIRING DIAGRAM

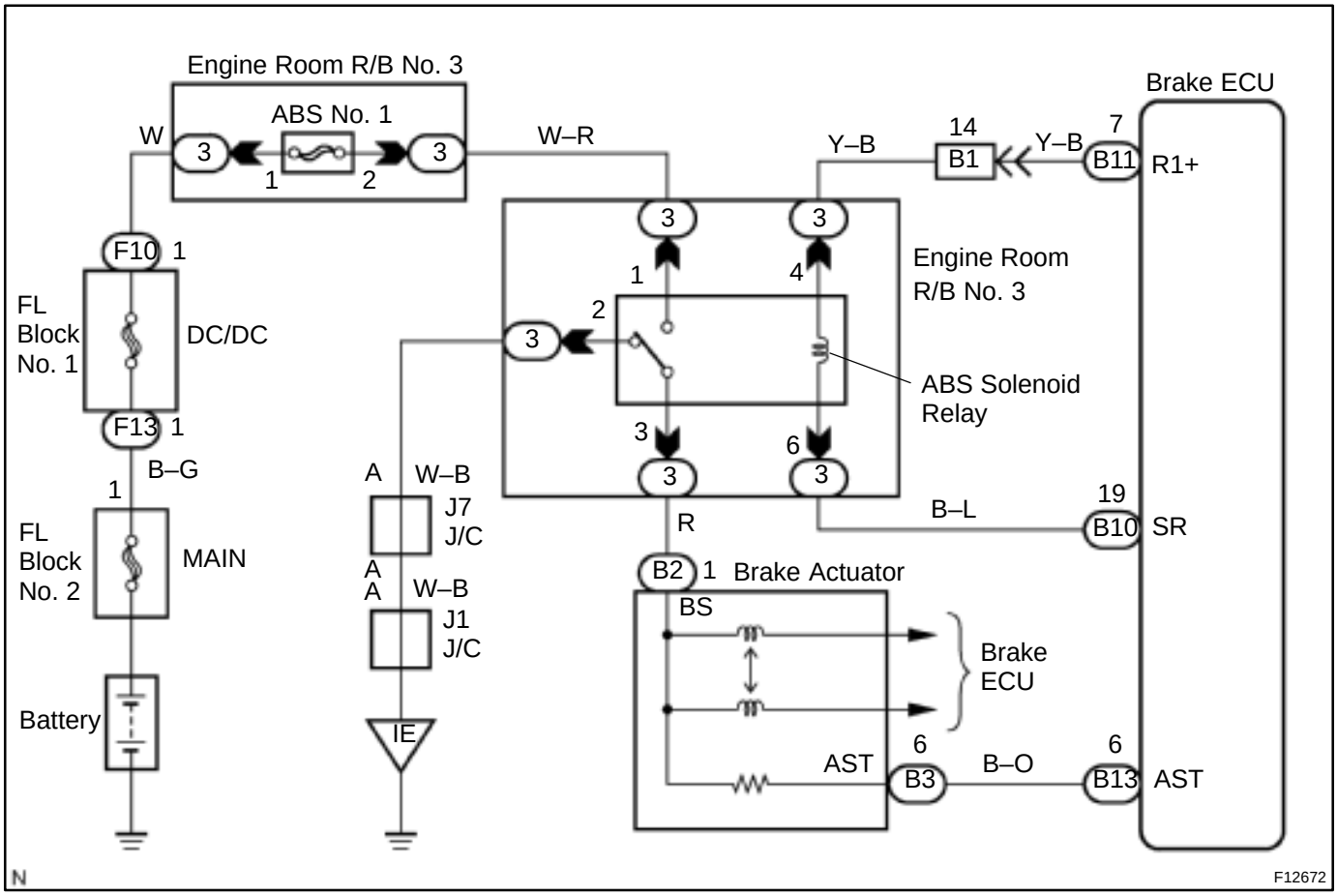

INSPECTION PROCEDURE

HINT:

Start the inspection from step 1 in case of using the TOYOTA hand–held tester and start from step 2 in case of not using the TOYOTA hand–held tester.

1	**Check ABS solenoid relay operation.**

PREPARATION:

(a) Connect the TOYOTA hand–held tester to the DLC3.
(b) Turn the ignition switch ON, and push the TOYOTA hand–held tester main switch ON.
(c) Select the ACTIVE TEST mode on the TOYOTA hand–held tester.

CHECK:

Check the operation sound of the ABS solenoid relay when operating it with the TOYOTA hand–held tester.

OK:

The operation sound of the ABS solenoid relay should be heard.

OK → **Go to step 4.**

NG

2	**Check voltage between terminals 1 and 2 of engine room R/B No. 3 (for ABS solenoid relay).**

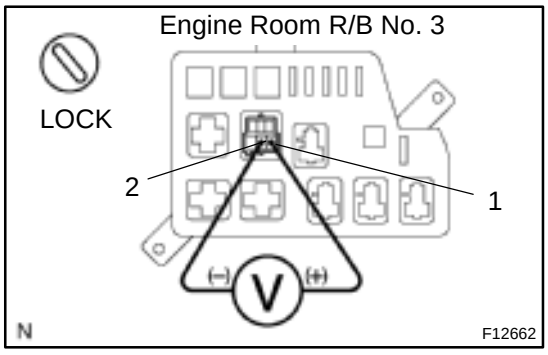

PREPARATION:

Remove the ABS solenoid relay from engine room R/B No. 3.

CHECK:

Measure the voltage between terminals 1 and 2 of engine room R/B No. 3 (for ABS solenoid relay).

OK:

Voltage: 10 – 14 V

NG → **Check and repair harness or connector.**

OK

3	Check ABS solenoid relay.

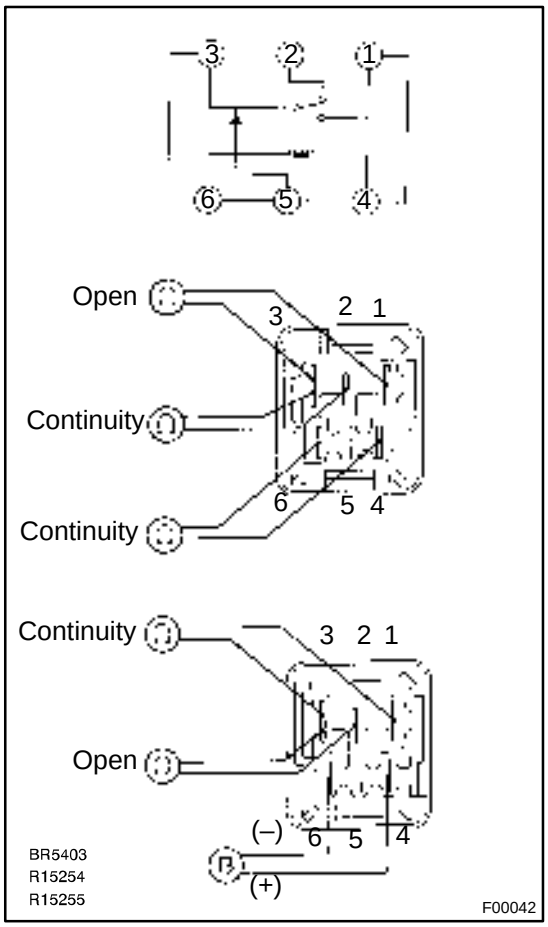

CHECK:

Check continuity between each terminal of ABS solenoid relay.

OK:

Terminals 4 and 6	Continuity (Reference value 80 Ω)
Terminals 2 and 3	Continuity
Terminals 1 and 3	Open

CHECK:

(a) Apply battery positive voltage between terminals 4 and 6.

(b) Check continuity between each terminal of ABS solenoid relay.

OK:

Terminals 2 and 3	Open
Terminals 1 and 3	Continuity

NG → **Replace ABS solenoid relay.**

OK

4	**Check continuity between terminals 3 of engine room R/B No. 3 (for ABS solenoid relay) and terminal AST of brake ECU.**

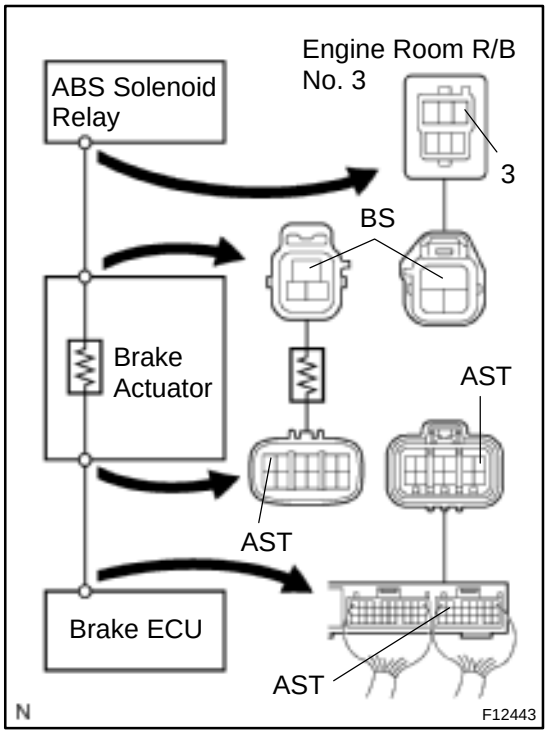

CHECK:

Check continuity between terminal 3 of engine room R/B No. 3 (for ABS solenoid relay) and terminal AST of brake ECU.

OK:

Continuity

HINT:

There is a resistance of approx. 33 Ω between terminals BS and AST of the brake actuator.

NG → **Repair or replace harness or brake actuator.**

OK

5	**Check for open and short circuit in harness and connector between ABS solenoid relay and brake ECU (See page IN–41).**

NG → **Repair or replace harness or connector.**

OK

If the same code is still output after the DTC is deleted, check the contact condition of each connection. If the connections are normal, the ECU may be defective.

DI1GZ–10

DTC	C1202/58	Brake Fluid Warning Switch Circuit

CIRCUIT DESCRIPTION

The brake fluid level warning switch sends the appropriate signal to the ECU when the brake fluid level drops.
HINT:
Depressing the parking brake pedal also turns on the brake warning light but does not diagnose DTC No. C1202/58.

DTC No.	DTC Detecting Condition	Trouble Area
C1202/58	When any of the following 1. 2. or 3. is detected: 1. When the ignition switch is ON, an open condition in the reservoir level switch circuit continues for 2 sec. or more. 2. While a vehicle is driven at a speed of 3 km/h (5 mph) or more, decrease in the reservoir level continues for 10 sec. or more. 3. While a vehicle is stopped, decrease in the reservoir level continues for 5 sec. or more.	• Brake fluid level • Brake fluid level warning switch • Brake fluid level warning switch circuit

WIRING DIAGRAM

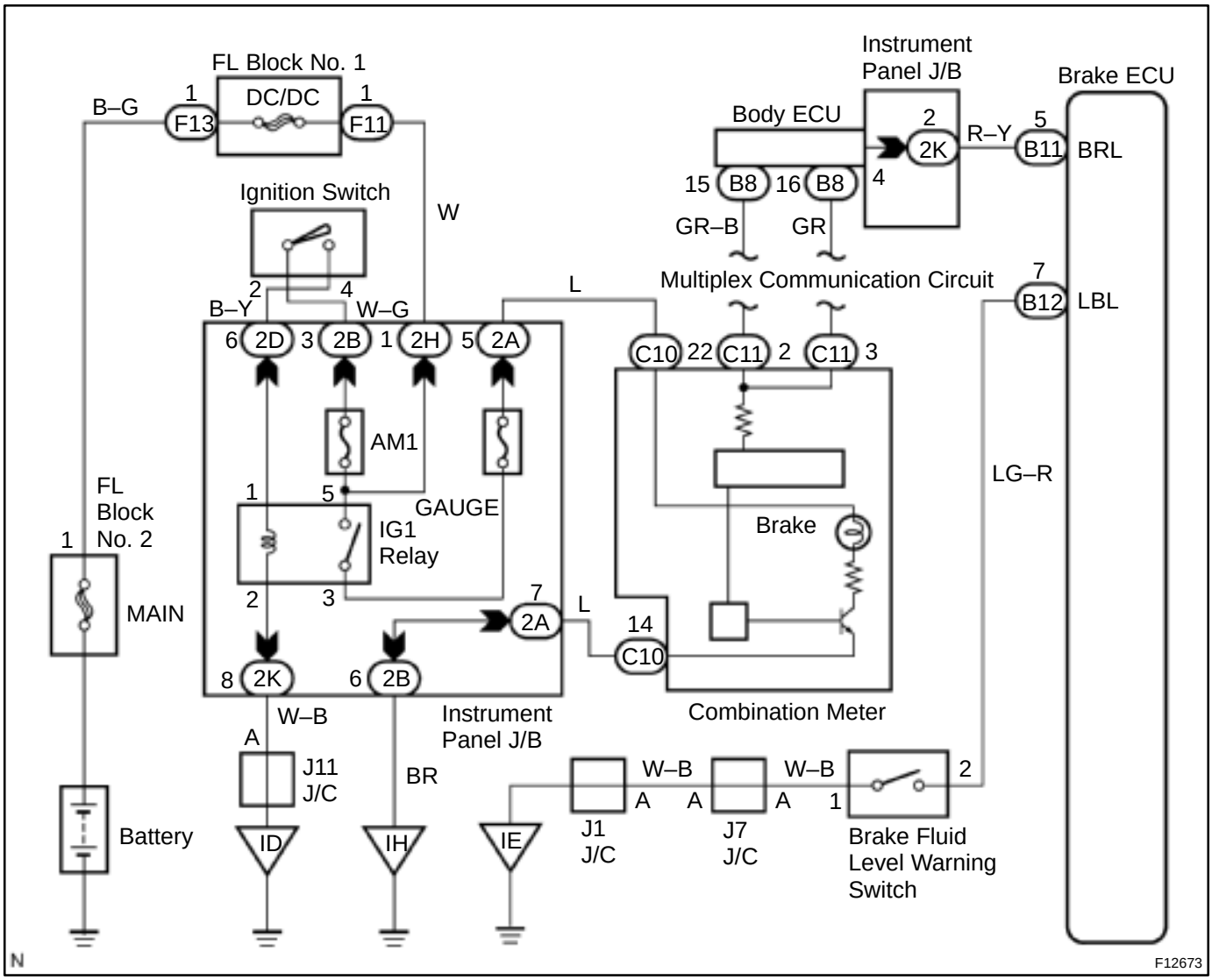

INSPECTION PROCEDURE

1	**Check brake fluid level.**

CHECK:

Check the amount of fluid in the brake reservoir.

NG → **Check and repair brake fluid leakage and add fluid.**

OK ↓

2	**Check brake fluid level warning switch (See page BE–2).**

NG → **Replace brake fluid level warning switch.**

OK ↓

3	**Check for open circuit in all the harness and components connected to brake fluid level warning light (See page IN–41).**

NG → **Repair or replace harness or connector.**

OK ↓

Check and replace brake ECU.

DI7OL–01

DTC	C1211/61, C1212/62	Linear Solenoid Circuit

CIRCUIT DESCRIPTION

DTC No.	DTC Detecting Condition	Trouble Area
C1211/61	When the ignition switch is ON, an open or short circuit of solenoid continues for 0.1 sec. or more.	• SLA+ or SLA– circuit • Brake actuator
C1212/62		• SLR+ or SLR– circuit • Brake actuator

WIRING DIAGRAM

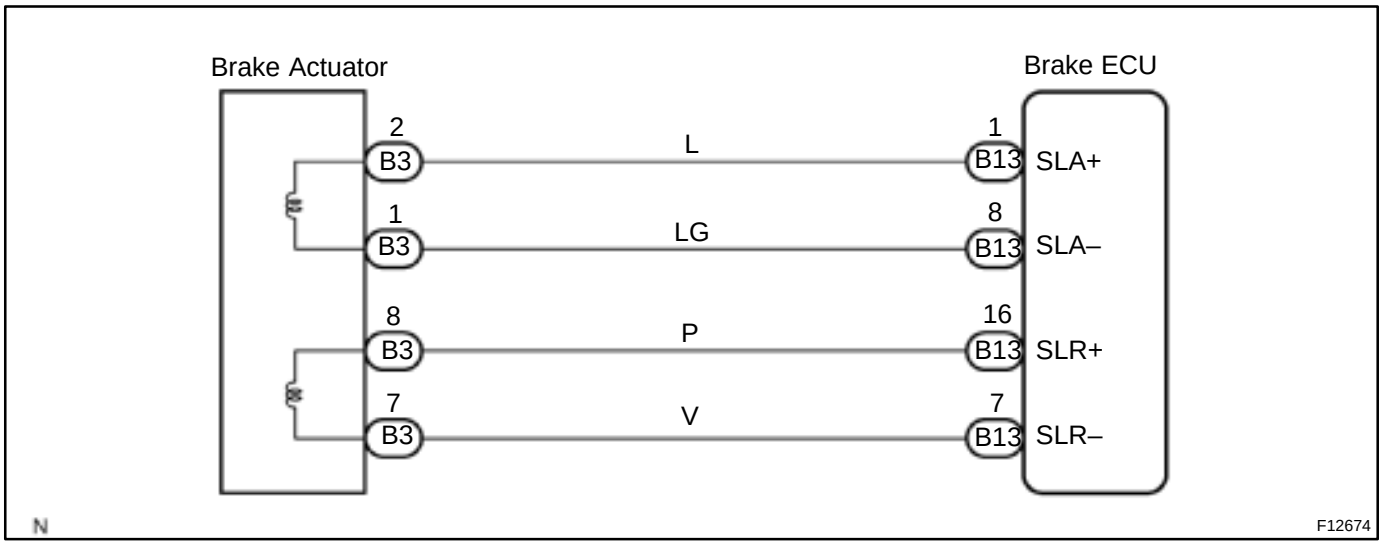

INSPECTION PROCEDURE

1	**Check brake actuator solenoid.**

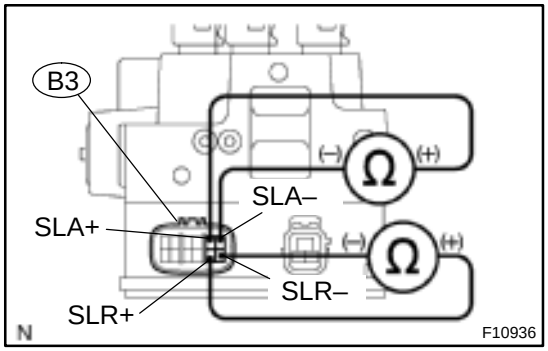

PREPARATION:
Disconnect the connector (B3) from the brake actuator.
CHECK:
Check continuity between each of terminals SLA+ and SLA–, and terminals SLR+ and SLR– of brake actuator.
OK:

Continuity

HINT:
Resistance of each solenoid approx. 2.3 Ω at 20 ˚C (68 ˚F).

NG → **Replace brake actuator.**

OK

2	**Check for open and short circuit in harness and connector between brake ECU and brake actuator (See page IN–41).**

NG → **Repair or replace harness or connector.**

OK

If the same code is still output after the DTC is deleted, check the contact condition of each connection. If the connections are normal, the ECU may be defective.

DI1H0–10

DTC	C1213/63	HV ECU Communication Circuit Malfunction

CIRCUIT DESCRIPTION

The circuit is used to send RBS control information from the brake ECU to the HV ECU (HVI+, HVI–), and HV control information from the HV ECU to the ABS ECU (HVO+, HVO–).

DTC No.	DTC Detecting Condition	Trouble Area
C1213/63	When the ignition switch is ON, abnormal communication with HV ECU continues for 0.5 sec. or more.	• HVI+ or HVI– circuit • HVO+ or HVO– circuit • HV ECU

WIRING DIAGRAM

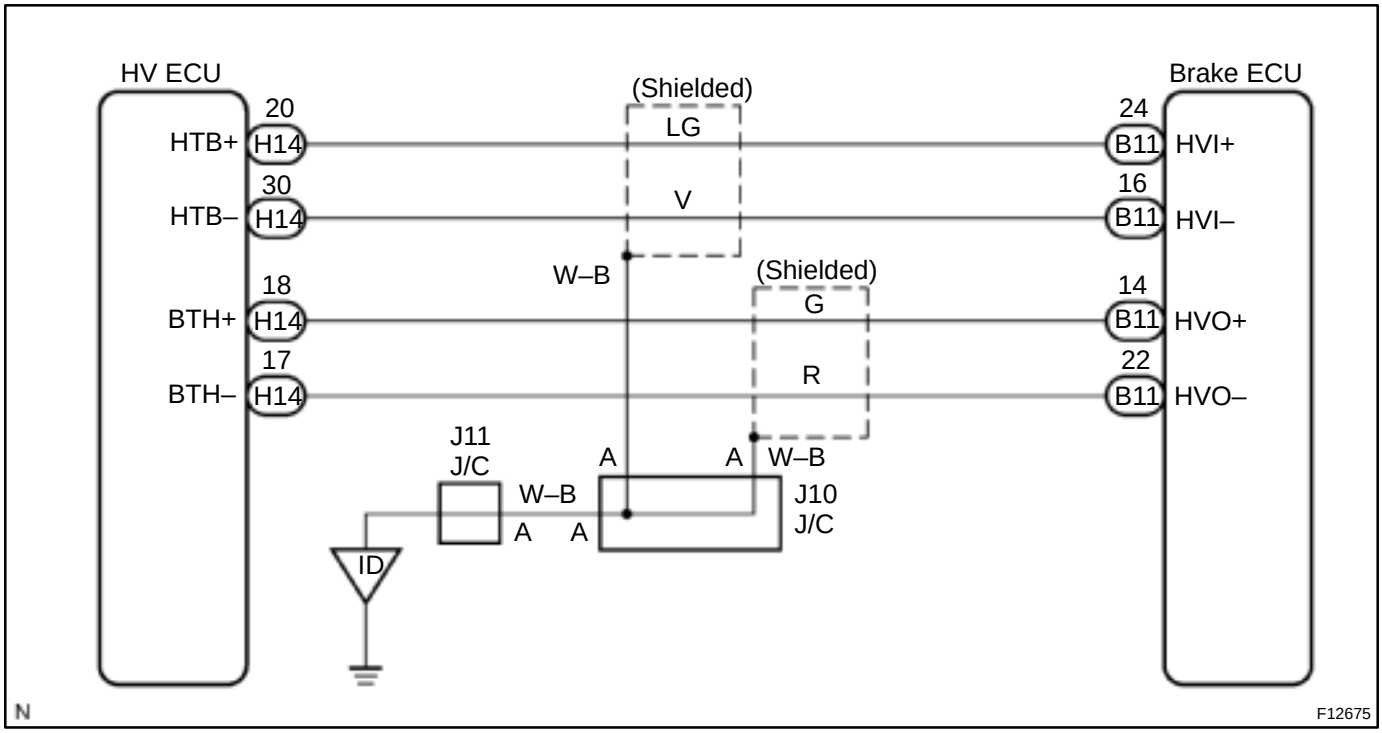

INSPECTION PROCEDURE

1	**Check for open and short circuit in harness and connector between terminals HVI+, HVI–, HVO+ and HVO– of brake ECU and HV ECU (See page IN–41).**

NG → **Repair or replace harness or connector.**

OK

Check and replace HV ECU or brake ECU.

DTC	C1215/15, C1216/16	Linear Solenoid Positive Voltage Malfunction

CIRCUIT DESCRIPTION

DTC No.	DTC Detecting Condition	Trouble Area
C1215/15	When any of the following 1. or 2. is detected: 1. When the ignition switch is ON, the condition that the voltage of the terminal +BS in brake ECU is 2.5 V or less continues for 0.5 sec. or more. 2. While a vehicle is driven at a speed of 3 km/h (5 mph) or more, the condition that the voltage of the terminal +BS in brake ECU is 9 V or less continues for 10 sec. or more.	• Battery • Charging system • Power source circuit
C1216/16	When the ignition switch is ON, the condition that the voltage of the terminal +BS in brake ECU is 17 V or more continues for 1.2 sec. or more.	

WIRING DIAGRAM

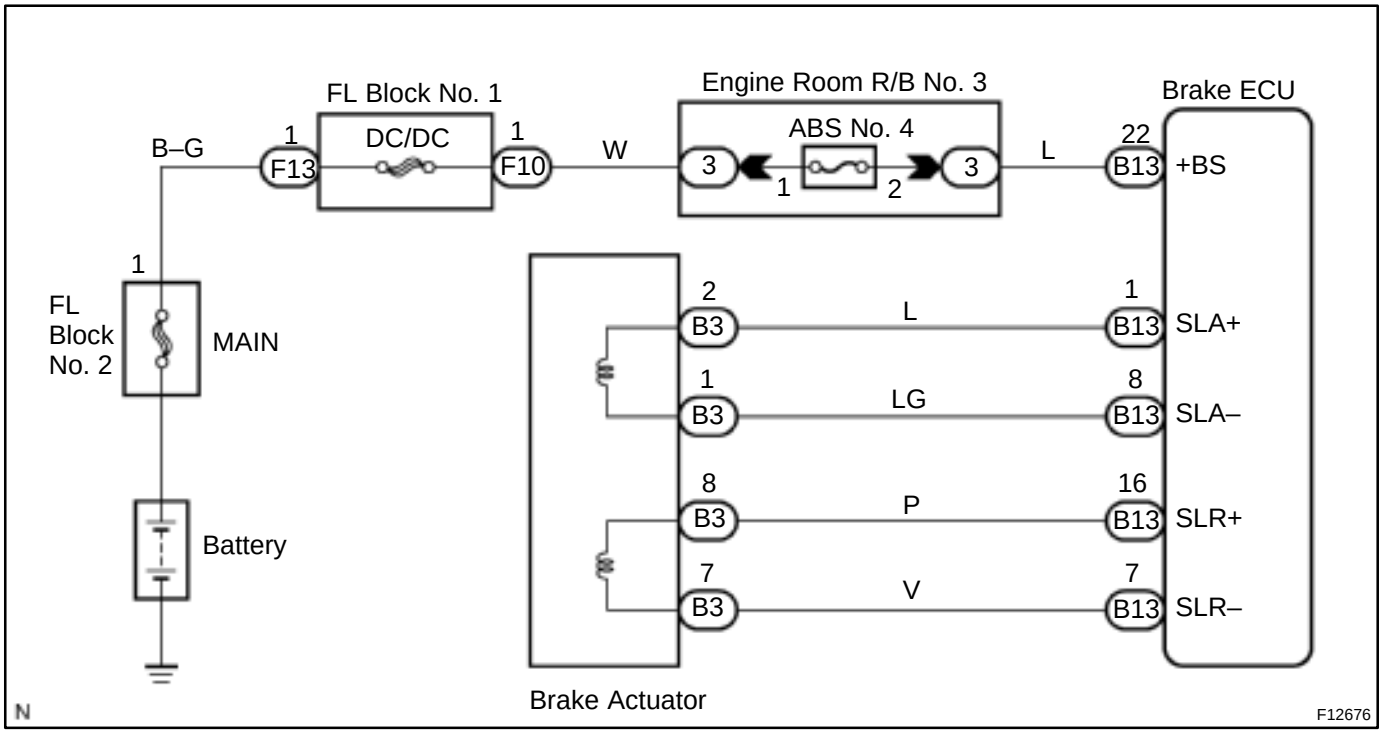

INSPECTION PROCEDURE

1	**Check ABS No. 4 fuse.**

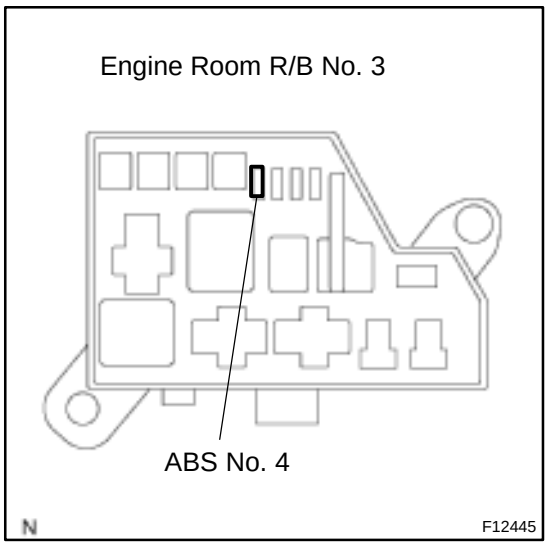

PREPARATION:
Remove the ABS No. 4 fuse from engine room R/B No. 3.
CHECK:
Check continuity of ABS No. 4 fuse.
OK:
Continuity

NG → **Check for short circuit in all the harness and components connected to ABS No. 4 fuse (See attached wiring diagram).**

OK

2	**Check battery positive voltage.**

OK:
Voltage: 10 – 14 V

NG → **Check and repair the charging system (See page HV–39).**

OK

3	**Check voltage of the ECU +BS power source.**

In case of using the TOYOTA hand–held tester:

PREPARATION:

(a) Connect the TOYOTA hand–held tester to the DLC3.
(b) Turn the ignition switch ON, and push the TOYOTA hand–held tester main switch ON.
(c) Select the DATALIST mode on the TOYOTA hand–held tester.

CHECK:

Check the voltage condition output from the ECU displayed on the TOYOTA hand–held tester.

OK:

”Normal” is displayed.

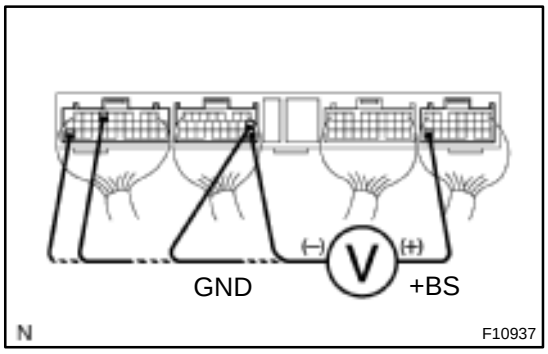

In case of not using TOYOTA hand–held tester:

PREPARATION:

Remove the ABS ECU with connectors still connected.

CHECK:

Measure voltage between terminals +BS and GND of ABS ECU connector.

OK:

Voltage: 10 – 14 V

OK → **Check and replace brake ECU.**

NG

4	**Check for open circuit (to +BS) in harness and connector between brake ECU and battery (See page IN–41).**

NG → **Repair or replace harness or connector.**

OK

5	Check continuity between terminal GND of brake ECU connector and body ground.

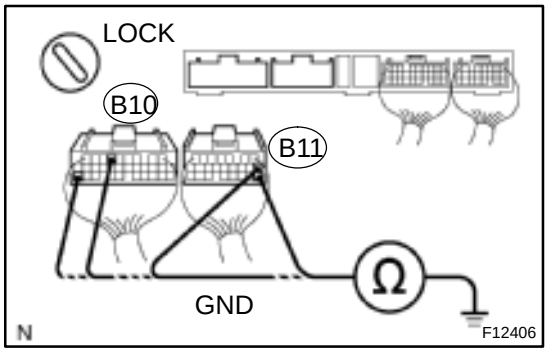

PREPARATION:
Disconnect the 2 connectors (B10, B11) from the brake ECU.
CHECK:
Measure resistance between terminals GND of brake ECU harness side connector and body ground.
OK:
Resistance: 1 Ω or less

NG → **Repair or replace harness or connector.**

OK

6	Check brake actuator solenoid.

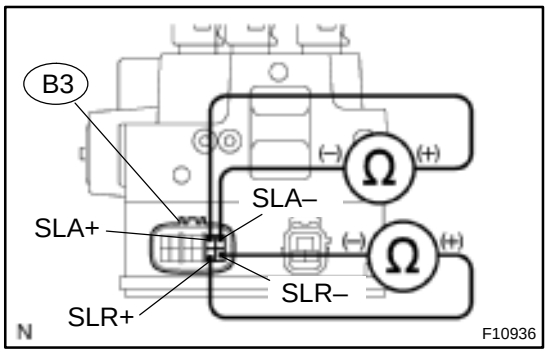

PREPARATION:
Disconnect the connector (B3) from the brake actuator.
CHECK:
Check continuity between each of terminals SLA+ and SLA–, and terminals SLR+ and SLR– of brake actuator.
OK:
Continuity
HINT:
Resistance of each solenoid approx. 2.3 Ω at 20 °C (68 °F).

NG → **Replace brake actuator.**

OK

7	**Check for short circuit in harness and connector between brake ECU and brake actuator (See page IN–41).**

NG → **Repair or replace harness or connector.**

OK

Check and replace brake ECU.

DI296–06

DTC	C1220–C1222/C1246/46	Each Hydraulic Pressure Sensor Circuit

CIRCUIT DESCRIPTION

DTC No.	DTC Detecting Condition	Trouble Area
C1220/46	Either of the following 1. or 2. is detected: 1. When the ignition switch is ON, the condition that the voltage of the terminal PREG in brake ECU is 0.14 V or less or 4.85 V or more, or that of terminal VREG is 4.4 V or less or 5.6 V or more continues for 1.2 sec. or more. 2. At a vehicle speed of 15 km/h (24 mph) or more, when both the brake switch and hydro motor are OFF, the voltage ratio of the terminal PREG to VREG of brake ECU is 0.06 or less or 0.14 or more continues for 8 sec. and this condition occurs consecutively 10 times.	• Regulator (REG) pressure sensor • Regulator (REG) pressure sensor circuit • Brake actuator
C1221/46	Either of the following 1. or 2. is detected: 1. When the ignition switch is ON, the condition that the voltage of the terminal PFR in brake ECU is 0.14 V or less or 4.85 V or more, or that of terminal VFR is 4.4 V or less or 5.6 V or more continues for 1.2 sec. or more. 2. At a vehicle speed of 15 km/h (24 mph) or more, when both the brake switch and hydro motor are OFF, the voltage ratio of the terminal PFR to VFR of brake ECU is 0.06 or less or 0.14 or more continues for 8 sec. and this condition occurs consecutively 10 times.	• Front (FR) pressure sensor • Front (FR) pressure sensor circuit • Brake actuator
C1222/46	Either of the following 1. or 2. is detected: 1. When the ignition switch is ON, the condition that the voltage of the terminal PRR in brake ECU is 0.14 V or less or 4.85 V or more, or that of terminal VRR is 4.4 V or less or 5.6 V or more continues for 1.2 sec. or more. 2. At a vehicle speed of 15 km/h (24 mph) or more, when both the brake switch and hydro motor are OFF, the voltage ratio of the terminal PRR to VRR of brake ECU is 0.06 or less or 0.14 or more continues for 8 sec. and this condition occurs consecutively 10 times.	• Rear (RR) pressure sensor • Rear (RR) pressure sensor circuit • Brake actuator
C1246/46	Either of the following 1. or 2. is detected: 1. When the ignition switch is ON, the condition that the voltage of the terminal PMC in brake ECU is 0.14 V or less or 4.85 V or more, or that of terminal VMC is 4.4 V or less or 5.6 V or more continues for 1.2 sec. or more. 2. At a vehicle speed of 15 km/h (24 mph) or more, when both the brake switch and hydro motor are OFF, the voltage ratio of the terminal PMC to VMC of brake ECU is 0.06 or less or 0.14 or more continues for 8 sec. and this condition occurs consecutively 10 times.	• Master cylinder (M/C) pressure sensor • Master cylinder (M/C) pressure sensor circuit • Brake actuator

WIRING DIAGRAM

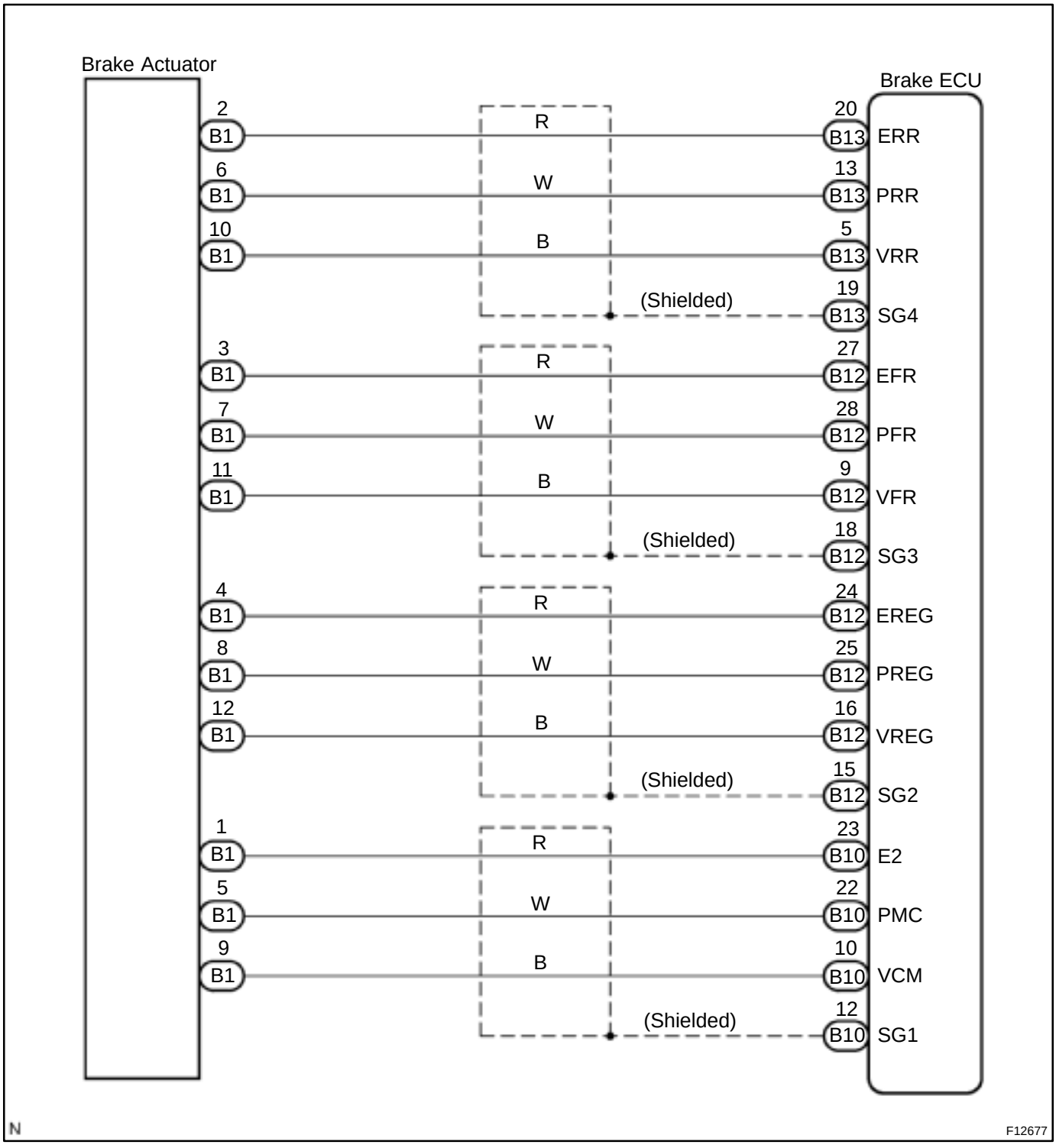

INSPECTION PROCEDURE

HINT:

Start the inspection from step 1 in case of using the TOYOTA hand–held tester and start from step 2 in case of not using the TOYOTA hand–held tester.

1	**Check output value of the each pressure sensor.**

PREPARATION:

(a) Connect the TOYOTA hand–held tester to the DLC3.
(b) Turn the ignition switch ON, and push the TOYOTA hand–held tester main switch ON.
(c) Select the DATALIST mode on the TOYOTA hand–held tester.

CHECK:

Check that the brake fluid pressure value of the master cylinder pressure sensor, regulator pressure sensor, front pressure sensor and rear pressure sensor displayed on the TOYOTA hand–held tester is changing when depressing the brake pedal.

OK:

Brake fluid pressure value must be changing.

OK → **Go to step 4.**

NG

2	Check each pressure sensor.

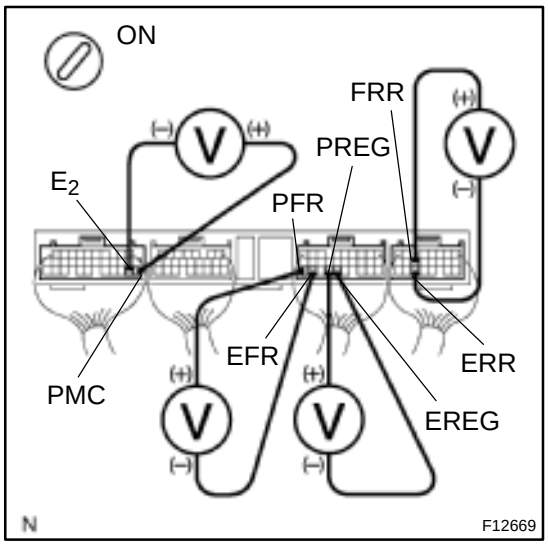

PREPARATION:

(a) Install the LSPV gauge to the front caliper bleeder plug portion, and bleed LSPV gauge.
SST 09709–29018

(b) Remove the brake ECU with connectors still connected.

CHECK:

Turn the ignition switch ON and depress the brake pedal, then check the relation between the fluid pressure and voltage of terminals of each pressure sensor shown below with the connector still connected.

Pressure sensor name	Symbols
Master cylinder pressure sensor	PMC – E_2
Regulator pressure sensor	PREG – EREG
Front pressure sensor	PFR – EFR
Rear pressure sensor	PRR – ERR

OK:

Front brake caliper fluid pressure	Voltage
0 kPa (0 Kgf/cm^2, 0 psi)	0.37 – 0.63 V
5,883 kPa (60 kgf/cm^2, 853 psi)	1.57 – 1.83 V
11,768 kPa (120 kgf/cm^2, 1,706 psi)	2.77 – 3.03 V

HINT:

It should be taken into account that the difference in voltage between terminals is caused by the slightly different pressure applied to each pressure sensor.

OK	Go to step 4.

NG

3	Check for open and short circuit in harness and connector between each pressure sensor and brake ECU (See page IN–41).

NG	Repair or replace harness or connector.

OK

Replace brake actuator.

4	**Check whether or not the brake ECU terminal STP input voltage is changed when the stop light switch is turned on and off.**

NO → **Check the stop light switch circuit (See page BE–2).**

YES

Check and replace brake ECU.

DI0WV–13

DTC	C1241/41	IG Power Source Circuit

CIRCUIT DESCRIPTION

DTC No.	DTC Detecting Condition	Trouble Area
C1241/41	Either of the following 1. 2. or 3. is detected: 1. While a vehicle is driven at a speed of 3 km/h (5 mph), the condition that the voltage of the terminal IG1 in brake ECU is 9 V or less continues for 10 sec. or more. 2. When the solenoid relay is ON, the contact point of the relay becomes OFF for 0.2 sec. or more due to the voltage decrease of the terminal IG1 in brake ECU. 3. When ignition switch is ON, the voltage of terminal IG1 in brake ECU remains in 17 V or more for 1.2 sec. or more.	• Battery • Charging system • Power source circuit

WIRING DIAGRAM

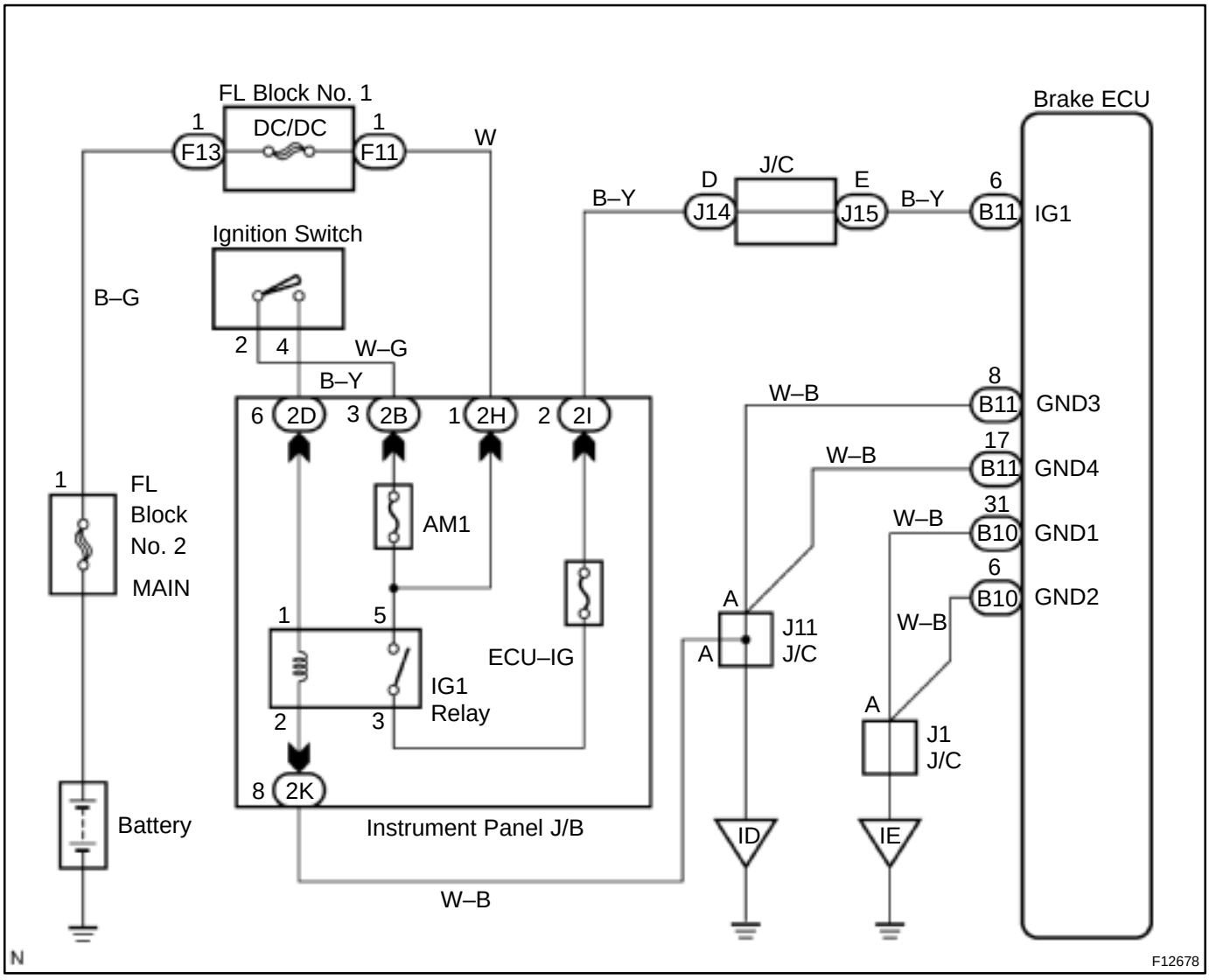

INSPECTION PROCEDURE

1	**Check ECU–IG fuse.**

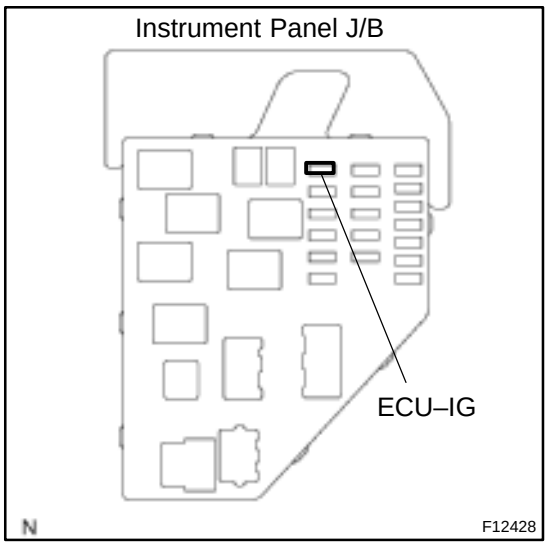

PREPARATION:
Remove the ECU–IG fuse from instrument panel J/B.
CHECK:
Check continuity of ECU–IG fuse.
OK:
Continuity

NG → **Check for short circuit in all the harness and components connected to ECU–IG fuse (See attached wiring diagram).**

OK

2	**Check battery positive voltage.**

OK:
Voltage: 10 – 14 V

NG → **Check and repair the charging system (See page HV–39).**

OK

3	**Check voltage of the ECU IG power source.**

In case of using the TOYOTA hand–held tester:

PREPARATION:

(a) Connect the TOYOTA hand–held tester to the DLC3.

(b) Turn the ignition switch ON, and push the TOYOTA hand–held tester main switch ON.

(c) Select the DATALIST mode on the TOYOTA hand–held tester.

CHECK:

Check the voltage condition output from the ECU displayed on the TOYOTA hand–held tester.

OK:

"Normal" is displayed.

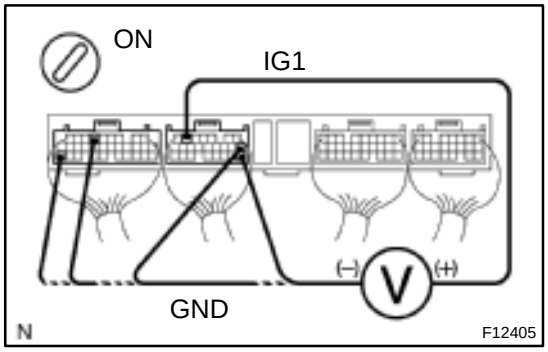

In case of not using the TOYOTA hand–held tester:

PREPARATION:

Remove the brake ECU with connectors still connected.

CHECK:

Turn the ignition switch ON, measure voltage between terminals IG1 and GND of brake ECU connector.

OK:

Voltage: 10 – 14 V

OK → **Check and replace brake ECU.**

NG

4	**Check continuity between terminal GND of brake ECU connector and body ground.**

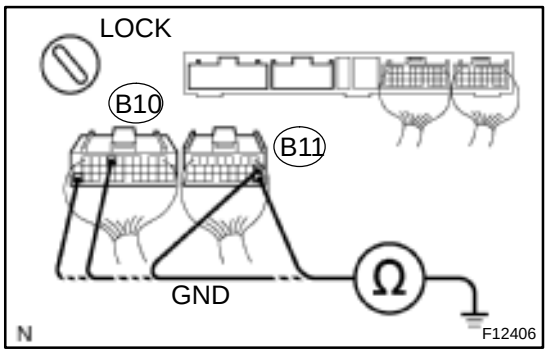

PREPARATION:

Disconnect the 2 connectors (B10, B11) from the brake ECU.

CHECK:

Measure resistance between terminal GND of brake ECU harness side connector and body ground.

OK:

Resistance: 1 Ω or less

NG → **Repair or replace harness or connector.**

OK

Check for open circuit in harness and connector between brake ECU and battery (See page IN–41).

DI7OO–01

DTC	C1242/42	IG2 Power Source Circuit

CIRCUIT DESCRIPTION

DTC No.	DTC Detecting Condition	Trouble Area
C1242/42	When the vehicle is driven at a speed of 3km/h (5 mph) or more, an open condition in IG2 circuit in brake ECU continues for 7 sec. or more.	• Battery • Charging system • Power source circuit

WIRING DIAGRAM

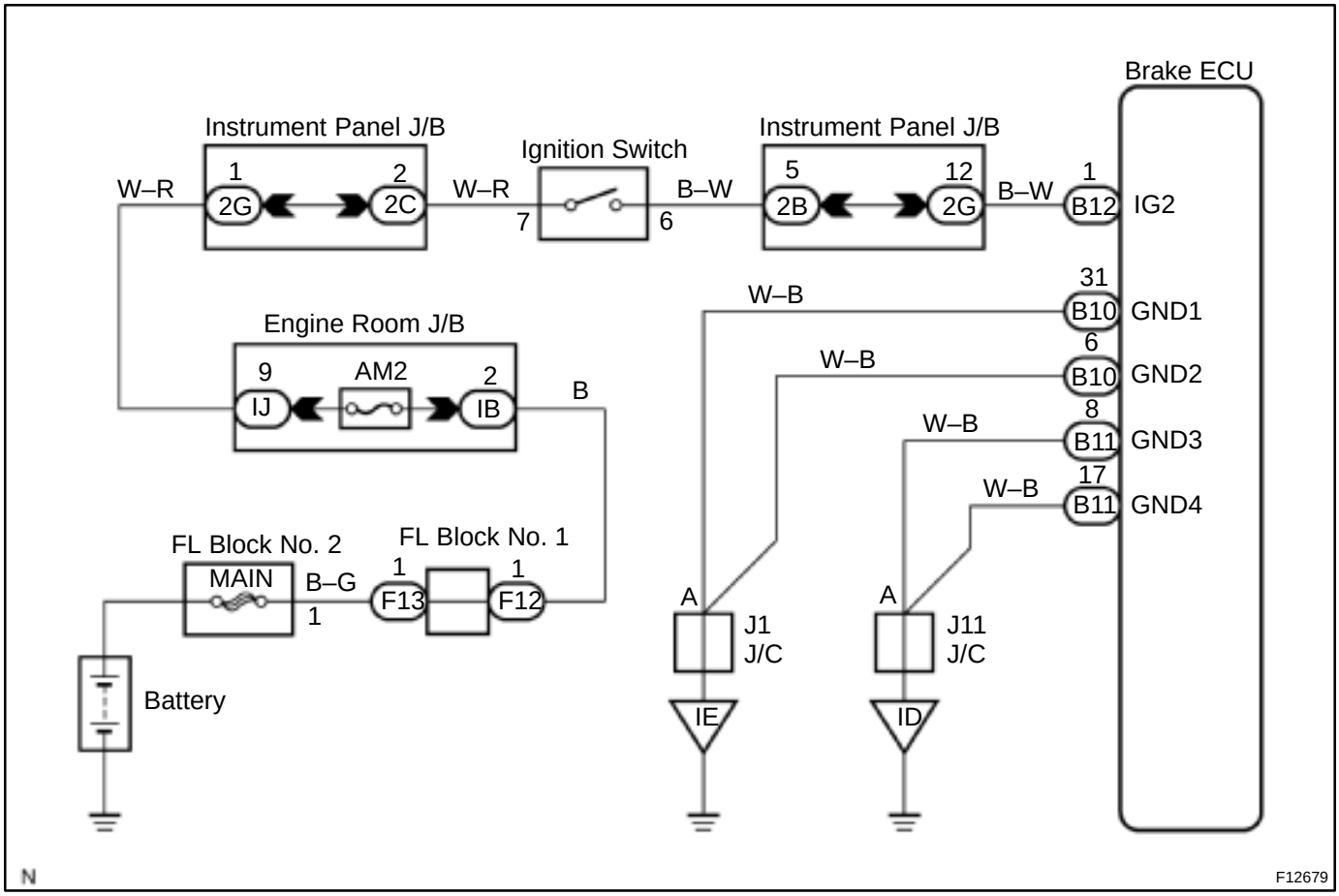

INSPECTION PROCEDURE

1	**Check battery positive voltage.**

OK:

Voltage: 10 – 14 V

NG → **Check and repair the charging system (See page HV–39).**

OK

2	**Check voltage of the ECU IG power source.**

In case of using the TOYOTA hand–held tester:

PREPARATION:

(a) Connect the TOYOTA hand–held tester to the DLC3.
(b) Turn the ignition switch ON, and push the TOYOTA hand–held tester main switch ON.
(c) Select the DATALIST mode on the TOYOTA hand–held tester.

CHECK:

Check the voltage condition output from the ECU displayed on the TOYOTA hand–held tester.

OK:

"Normal" is displayed.

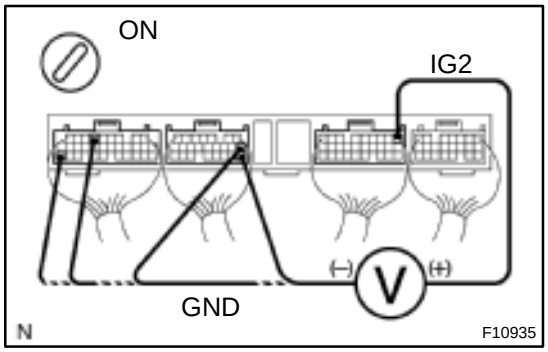

In case of not using the TOYOTA hand–held tester:

PREPARATION:

Remove the brake ECU with connectors still connected.

CHECK:

Turn the ignition switch ON, measure voltage between terminals IG2 and GND of brake ECU connector.

OK:

Voltage: 10 – 14 V

OK → **Check and replace brake ECU.**

NG

3	**Check continuity between terminal GND of brake ECU connector and body ground.**

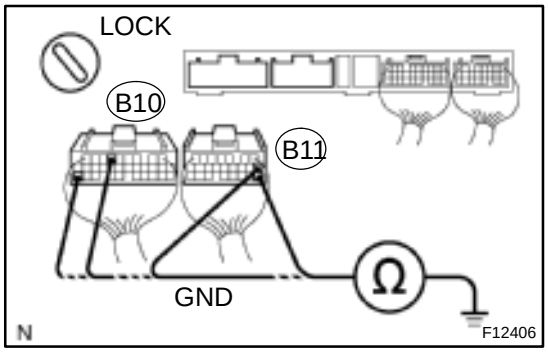

PREPARATION:
Disconnect the 2 connectors (B10, B11) from the brake ECU.
CHECK:
Measure resistance between terminals GND of brake ECU harness side connector and body ground.
OK:

Resistance: 1 Ω or less

NG → **Repair or replace harness or connector.**

OK

Check for open circuit in harness and connector between brake ECU and battery (See page IN–41).

DTC	C1249/49	Stop Light Switch Circuit

CIRCUIT DESCRIPTION

DTC No.	DTC Detecting Condition	Trouble Area
C1249/49	When the ignition switch is ON, the condition that the terminal STP in brake ECU is 3 – 12 V continues for 1 sec. or more.	• Stop light switch • Stop light switch circuit

WIRING DIAGRAM

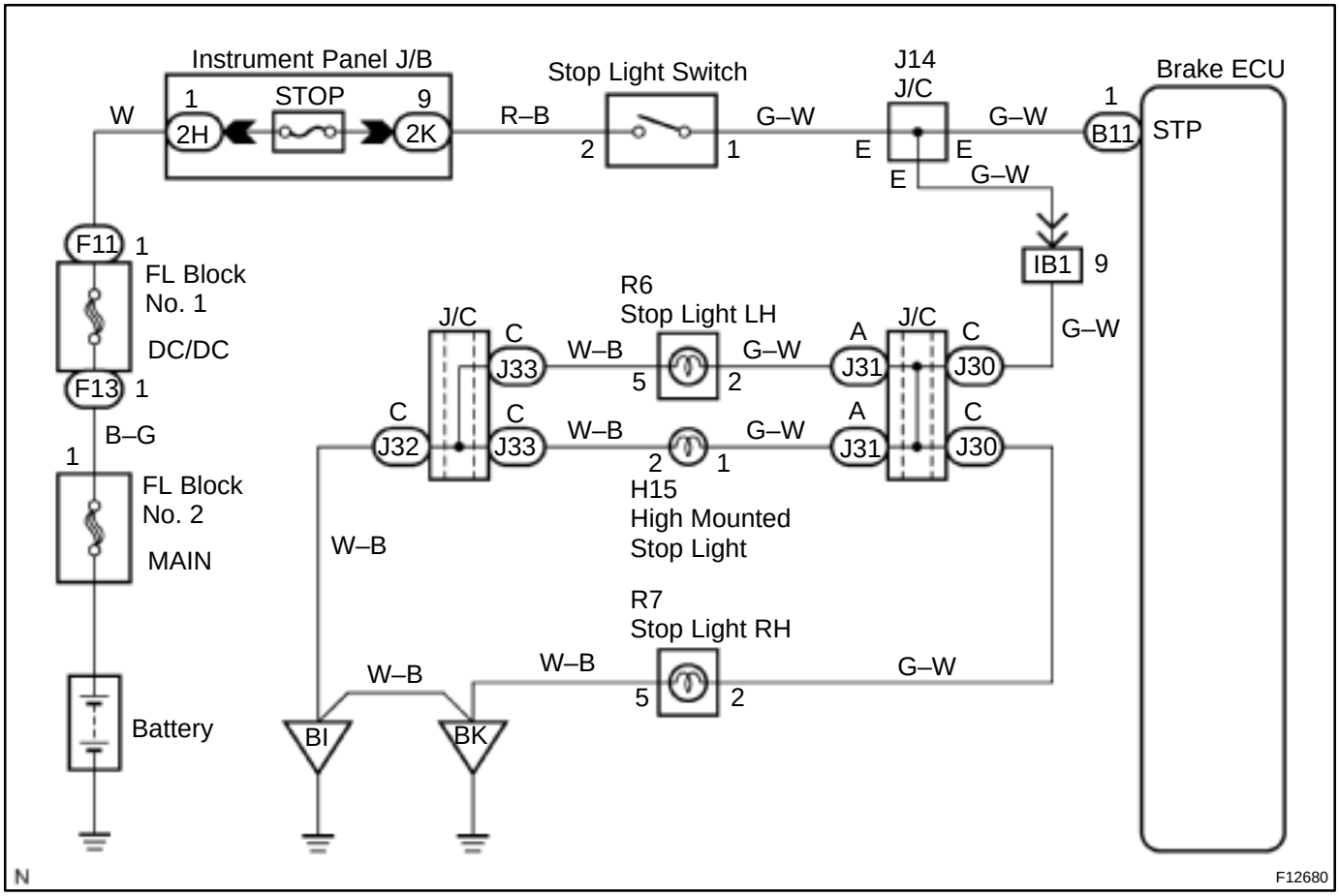

INSPECTION PROCEDURE

1	**Check operation of the stop light switch.**

CHECK:
Check that the stop light lights up when brake pedal is depressed and turns off when the brake pedal is released.

OK → **Go to step 3.**

NG

2	**Check stop light circuit (See page BE–2).**

NG → **Repair or replace stop light circuit.**

OK

3	**Check voltage between terminal STP of brake ECU and body ground.**

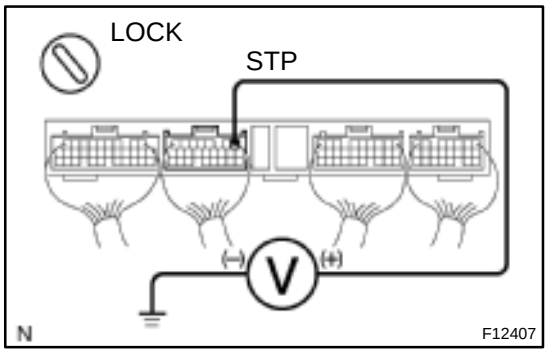

PREPARATION:
Remove the brake ECU with connectors still connected.
CHECK:
Measure voltage between terminal STP of brake ECU and body ground when brake pedal is depressed.
OK:
Voltage: 8 – 14 V

OK → **Check and replace brake ECU.**

NG

4	**Check for open circuit in harness and connector between brake ECU and stop light switch (See page IN–41).**

NG → **Repair or replace harness or connector.**

OK

Proceed to next circuit inspection on problem symptoms table (See page DI–365).

DI298–06

DTC	C1251/51	Hydraulic Brake Booster Pump Motor Malfunction

CIRCUIT DESCRIPTION

DTC No.	DTC Detecting Condition	Trouble Area
C1251/51	Either of the following 1. or 2. is detected: 1. After turning the ignition switch ON, the current of more than 28A flows to the motor for more than 1 sec. 2. After turning the ignition switch ON, less than 7A change in current is detected more than 3 times in a row when the motor is ON.	Hydraulic brake booster pump motor

WIRING DIAGRAM

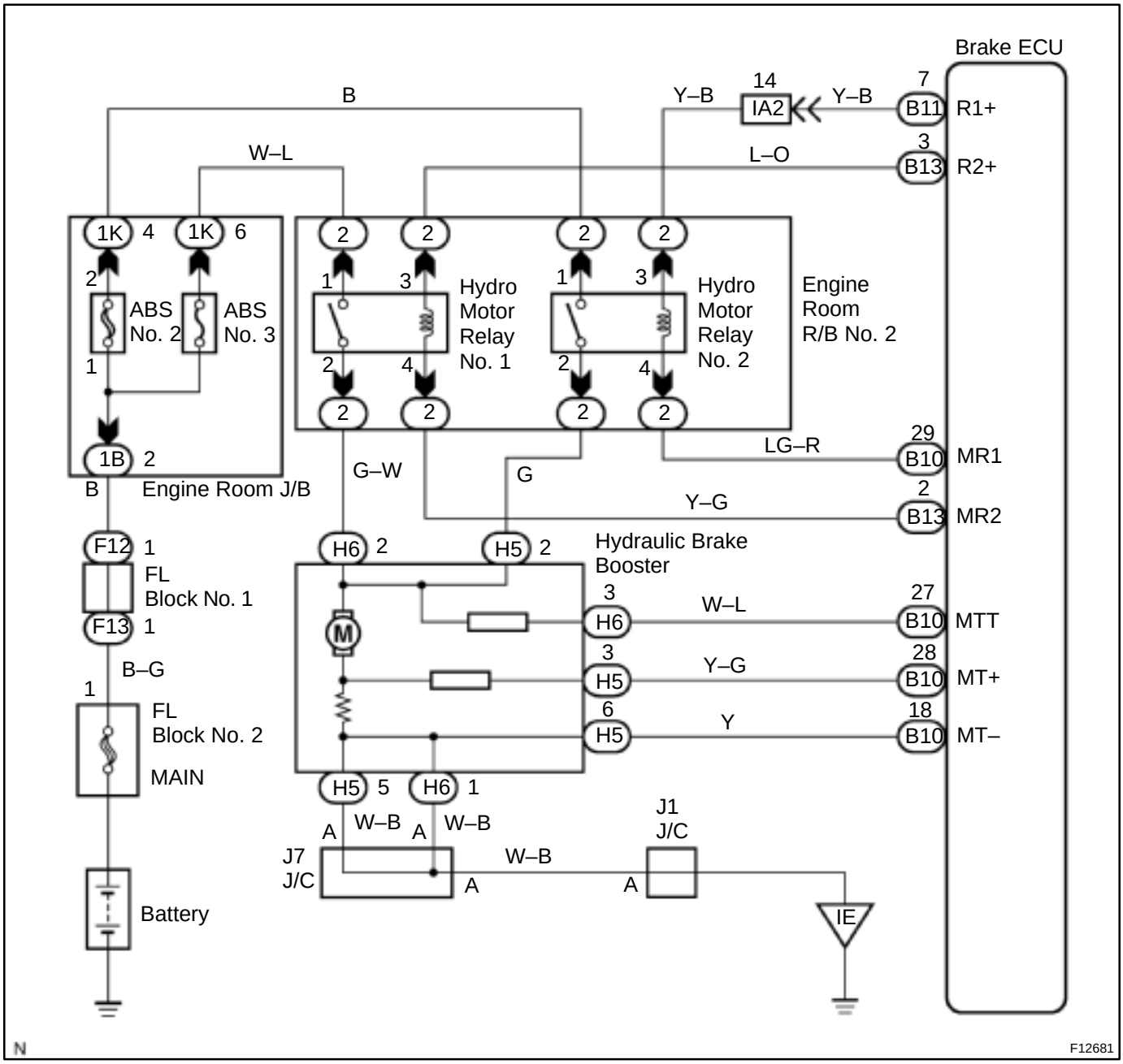

INSPECTION PROCEDURE

1	**Check operation of hydraulic brake booster pump motor.**

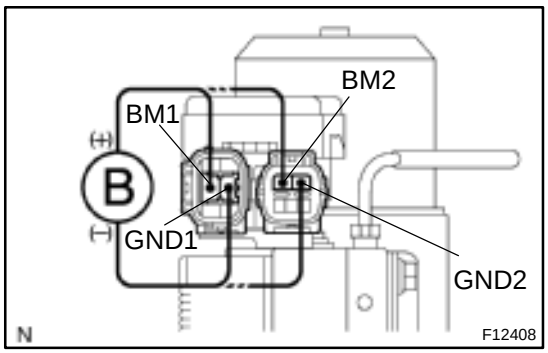

PREPARATION:

Disconnect the 2 connectors from the hydraulic brake booster.

CHECK:

Connect battery positive ⊕ lead to BM1 or BM2 terminal and battery negative ⊖ lead to GND1 or GND2 terminal of the hydraulic brake booster (pump motor) connector.

OK:

The operation sound of the pump motor should be heard.

NG → **Go to step 4.**

OK

2	**Check hydraulic brake booster resistance.**

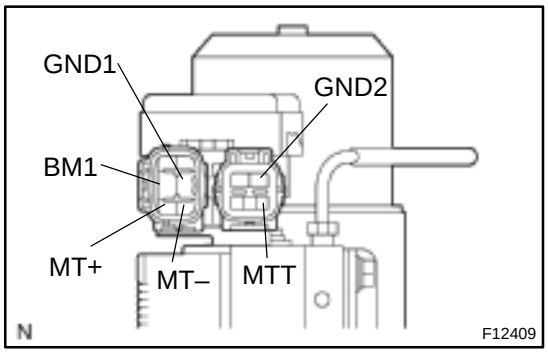

CHECK:

Check resistance between terminals MT+ and MT–, BM1 and MTT, BM2 and MTT, GND1 and MT+, GND2 and MT+ of the hydraulic brake booster connector.

OK:

30 – 36 Ω

NG → **Replace the hydraulic brake booster assembly.**

OK

3	Check for open circuit in harness and connector between hydraulic brake booster and brake ECU (See page IN–41).

NG → Repair or replace harness or connector.

OK →

Check and replace brake ECU.

4	Check for open or short circuit in harness and connector between hydraulic brake booster pump motor and hydraulic brake booster (See page IN–41).

NG → Replace wire harness.

OK →

5	Check hydraulic brake booster pump motor (See page BR–48).

NG → Replace hydraulic brake booster pump motor.

OK →

Replace hydraulic brake booster.

DTC	C1252/52	Hydraulic Brake Booster Pump Motor ON Time Abnormally Long

CIRCUIT DESCRIPTION

DTC No.	DTC Detecting Condition	Trouble Area
C1252/52	After turning the ignition switch ON, when the power is supplied to the pump motor for more than 5 minutes.	• Hydraulic brake booster pump motor • Hydraulic brake booster pump motor circuit • Pressure switch (PH or PL)

WIRING DIAGRAM

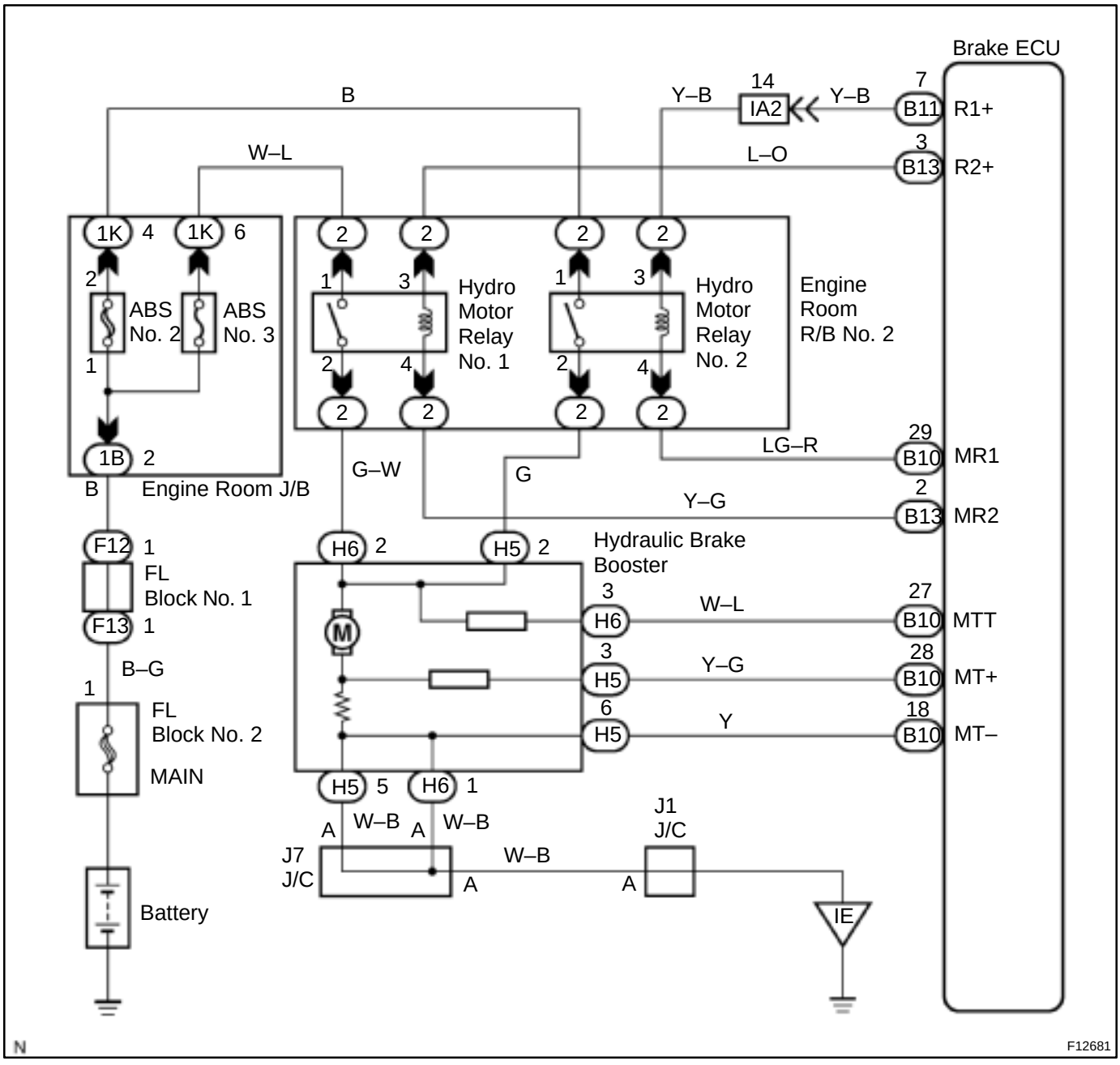

INSPECTION PROCEDURE

1	**Check operation of hydraulic brake booster pump motor.**

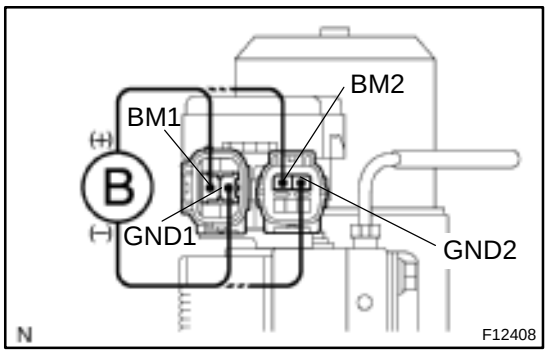

PREPARATION:

Disconnect the 2 connectors from the hydraulic brake booster.

CHECK:

Connect battery positive ⊕ lead to BM1 or BM2 terminal and battery negative ⊖ lead to GND1 or GND2 terminal of the hydraulic brake booster (pump motor) connector.

OK:

The operation sound of the pump motor should be heard.

NG → **Go to step 9.**

OK

2	**Check for short circuit in harness and connector between BM1 or BM2 of hydraulic brake booster and hydro motor relay (See page IN–41).**

NG → **Repair or replace harness or connector.**

OK

3	**Check for short circuit in harness and connector between MTT of hydraulic brake booster and brake ECU (See page IN–41).**

NG → **Repair or replace harness or connector.**

OK

4	**Check pressure switch (PH).**

In case of using the TOYOTA hand–held tester:

PREPARATION:

(a) Connect the TOYOTA hand–held tester to the DLC3.
(b) Turn the ignition switch ON, and push the TOYOTA hand–held tester main switch ON.
(c) Select the DATALIST mode on the TOYOTA hand–held tester.

CHECK:

Depress the brake pedal more than 40 times with the ignition switch OFF then turn the ignition switch ON and check the pressure switch (PH) condition.

HINT:

When a pressure in power supply system is released, reaction force becomes heavy and stroke becomes shorter.

OK:

"OFF" turns to "ON".

HINT:

OFF: Low pressure

ON: High pressure

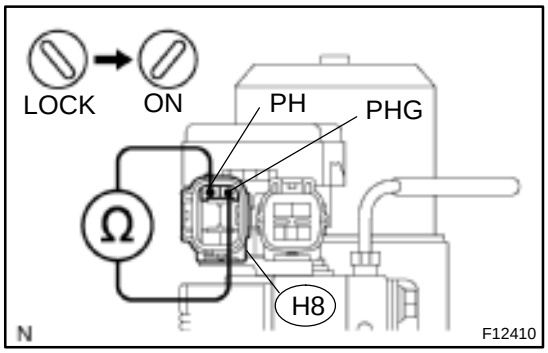

In case of not using the TOYOTA hand–held tester:

PREPARATION:

(a) Disconnect the connector (H8) from the hydraulic brake booster.
(b) With the ignition switch OFF, depress the brake pedal more than 40 times to decrease the accumulator pressure.

HINT:

When a pressure in power supply system is released, reaction force becomes heavy and stroke becomes shorter.

CHECK:

Measure resistance between terminals PH and PHG of hydraulic brake booster connector.

OK:

Resistance: 1.0 kΩ

PREPARATION:

(a) Connect the connector (H8) to the hydraulic brake booster.
(b) Disconnect the connector (H8) after ignition switch has been ON and the pump motor has stopped.

CHECK:

Measure resistance between terminals PH and PHG of hydraulic brake booster connector.

OK:

Resistance: 0 Ω

HINT:

After inspection, connect the connector and clear the DTC (See page DI–353).

NG	**Replace hydraulic brake booster assembly.**

OK

5	**Check pressure switch (PL).**

In case of using TOYOTA hand–held tester:

PREPARATION:

(a) Connect the TOYOTA hand–held tester to the DLC3.
(b) Turn the ignition switch ON, and push the TOYOTA hand–held tester main switch ON.
(c) Select the DATALIST mode on the TOYOTA hand–held tester.

CHECK:

Depress the brake pedal more than 40 times with the ignition switch OFF then turn the ignition switch ON and check the pressure switch (PL) condition.

HINT:

When a pressure in power supply system is released, reaction force becomes heavy and stroke becomes shorter.

OK:

"OFF" turns to "ON".

HINT:

OFF: Low pressure

ON: High pressure

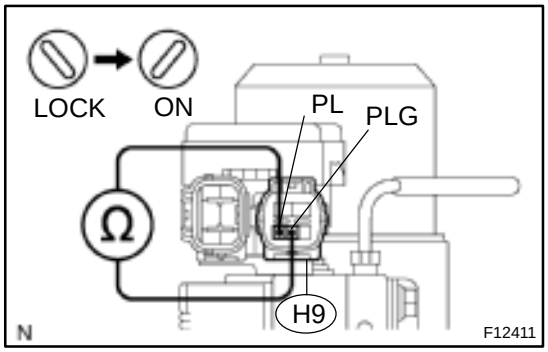

In case of not using TOYOTA hand–held tester:

PREPARATION:

(a) Disconnect the connector (H9) from the hydraulic brake booster.
(b) With the ignition switch OFF, depress the brake pedal more than 40 times to decrease the accumulator pressure.

HINT:

When a pressure in power supply system is released, reaction force becomes heavy and stroke becomes shorter.

CHECK:

Measure resistance between terminals PL and PLG of hydraulic brake booster connector.

OK:

Resistance: 5.7 kΩ

PREPARATION:

(a) Connect the connector (H9) to the hydraulic brake booster.
(b) Disconnect the connector (H9) after ignition switch has been ON and the pump motor has stopped.

CHECK:

Measure resistance between terminals PL and PLG of hydraulic brake booster connector.

OK:

Resistance: 1.0 kΩ

HINT:
After inspection, connect the connector and clear the DTC (See page DI–353).

NG → **Replace hydraulic brake booster assembly.**

OK

6	**Check for short circuit in harness and connector between pressure switch and brake ECU (See page IN–41).**

NG → **Repair or replace harness or connector.**

OK

7	Check hydro motor relay No. 1 and No. 2.

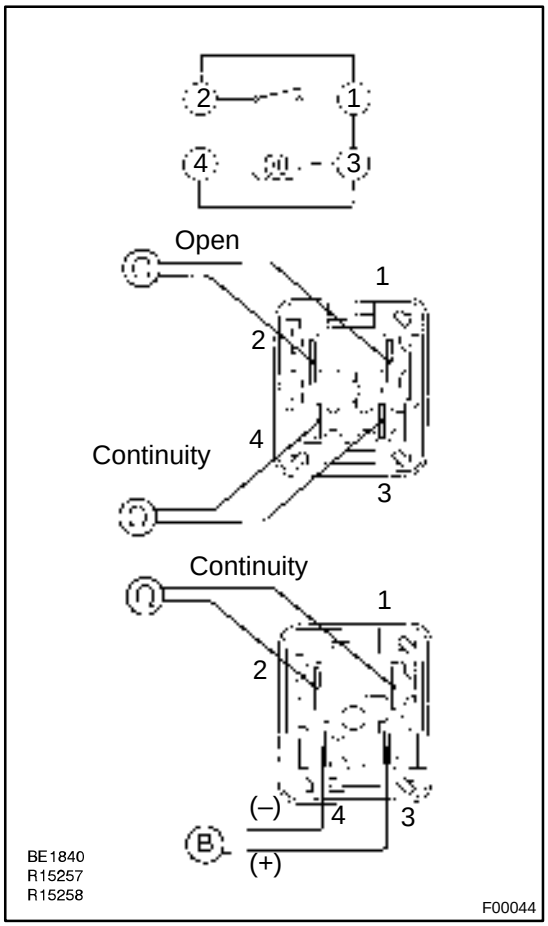

PREPARATION:

Remove the hydro motor relay No. 1 and No. 2 from the engine room R/B No. 2.

CHECK:

Check continuity between each pair of terminal of motor relay.

OK:

Terminals 3 and 4	Continuity (Reference value *)
Terminals 1 and 2	Open

* Reference value:
Hydro motor relay No. 1 62 Ω
Hydro motor relay No. 2 54 Ω

CHECK:

(a) Apply battery positive voltage between terminals 3 and 4.
(b) Check continuity between terminals.

OK:

Terminals 1 and 2	Continuity

NG → **Replace hydro motor relay.**

OK

8	Check for short circuit in harness and connector between hydro motor relay No. 1, No. 2 and brake ECU (See page IN–41).

NG → **Repair or replace harness or connector.**

OK

Check and replace brake ECU.

9	**Check for open or short circuit in harness and connector between hydraulic brake booster pump motor and hydraulic brake booster (See page IN–41).**

NG → **Replace wire harness.**

OK

10	**Check hydraulic brake booster pump motor (See page BR–48).**

NG → **Replace hydraulic brake booster pump motor.**

OK

Replace hydraulic brake booster.

DI29A–13

DTC	C1253/53	Hydro Motor Relay Circuit

CIRCUIT DESCRIPTION

The hydro motor relay supplies power to the hydraulic brake booster pump motor. While the ABS & EBD & RBS are activated, the ECU switches the motor relay ON and operates the hydraulic brake booster pump motor.

DTC No.	DTC Detecting Condition	Trouble Area
C1253/53	When any of the following 1. through 4. is detected: 1. After turning the ignition switch ON, open in the relay coil is detected for more than 1 sec. 2. When the pressure switch does not control motor driving, the status that the motor relay is always ON continues for more than 1 sec. due to short circuit. 3. When the pressure switch (PH) detects the low pressure or while the pump motor operates to increase the pressure, the status that the motor relay does not turn ON continues for more than 0.2 sec. 4. When pressure switch does not control motor driving, the status that the motor relay is always ON due to the welded contact continues for more than 2 sec.	• Hydro motor relay • Hydro motor relay circuit

WIRING DIAGRAM

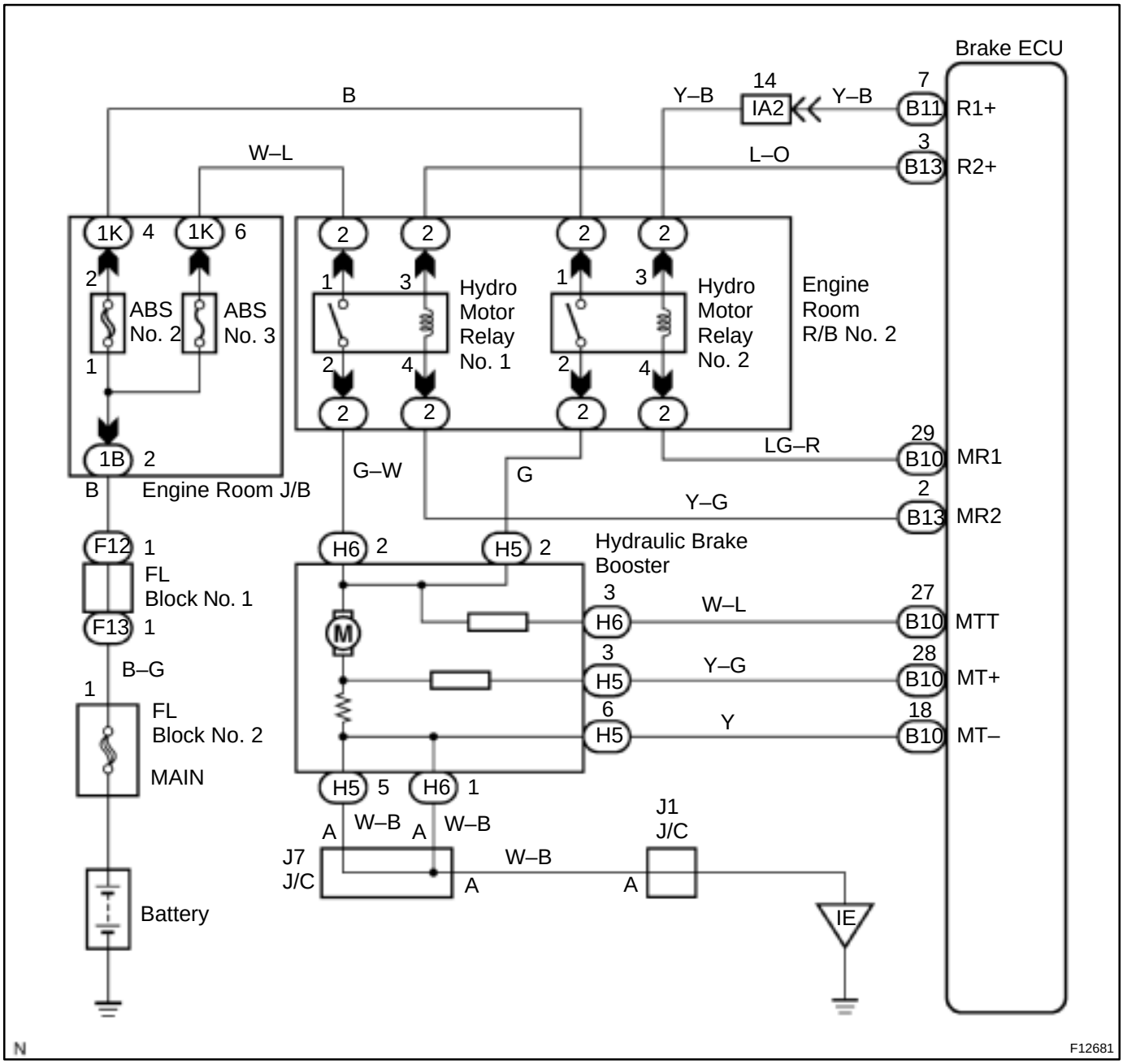

INSPECTION PROCEDURE

HINT:

Start the inspection from step 1, in case of using the TOYOTA hand–held tester and start from step 3, in case of not using TOYOTA hand–held tester.

1	**Check hydro motor relay operation.**

PREPARATION:

(a) Connect the TOYOTA hand–held tester to the DLC3.
(b) Turn the ignition switch ON, and push the TOYOTA hand–held tester main switch ON.
(c) Select the ACTIVE TEST mode on the TOYOTA hand–held tester.

CHECK:

Check the operation sound of the hydro motor relays individually when operating it with the TOYOTA hand–held tester.

OK:

The operation sound of the hydro motor relay should be heard.

NG → **Go to step 3.**

OK

2	**Check for short circuit in harness and connector between MTT of hydraulic brake booster and brake ECU (See page IN–41).**

NG → **Repair or replace harness or connector.**

OK

Check and replace brake ECU.

3	**Check voltage between terminal 1 of engine room R/B No. 2 (for hydro motor relays) and body ground.**

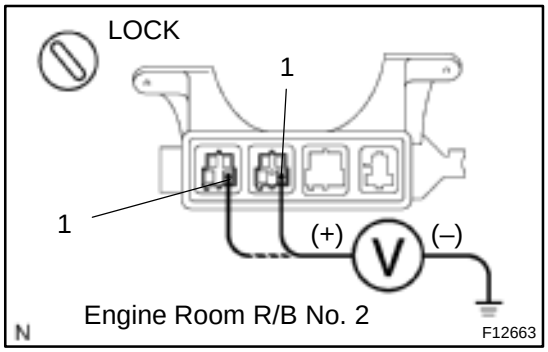

PREPARATION:
Remove the hydro motor relay No. 1 and No. 2 from the engine room R/B No. 2.

CHECK:
Measure voltage between terminal 1 of engine room R/B No. 2 (for hydro motor relays) and body ground.

OK:

Voltage: 10 – 14 V

NG → **Check and repair harness or connector.**

OK

4	**Check hydro motor relay.**

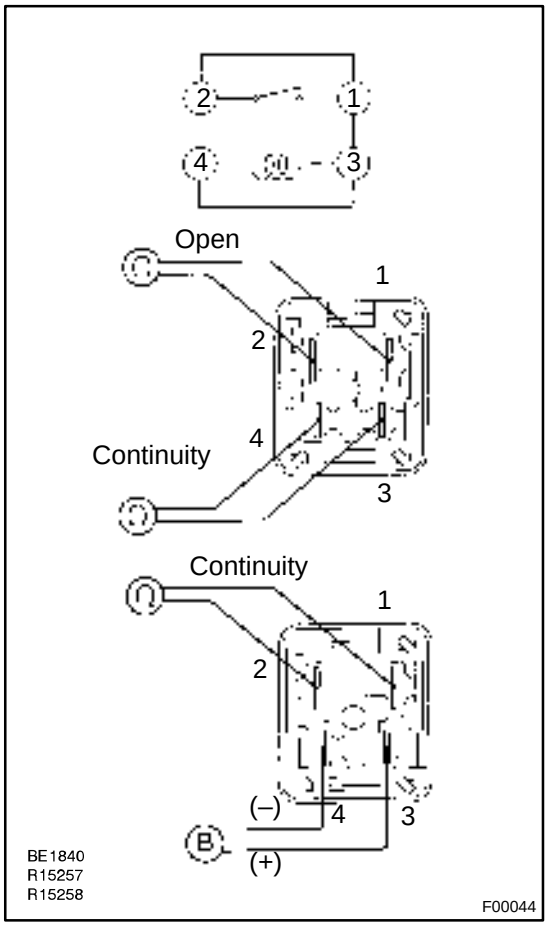

CHECK:
Check continuity between each pair of terminal of motor relay.

OK:

Terminals 3 and 4	Continuity (Reference value *)
Terminals 1 and 2	Open

* Reference value:
Hydro motor relay No. 1 62 Ω
Hydro motor relay No. 2 54 Ω

CHECK:
(a) Apply battery positive voltage between terminals 3 and 4.
(b) Check continuity between terminals.

OK:

Terminals 1 and 2	Continuity

NG → **Replace hydro motor relay.**

OK

5	**Check continuity between each terminal 2 of engine room R/B No. 2 (for hydro motor relay) and terminal MTT of brake ECU.**

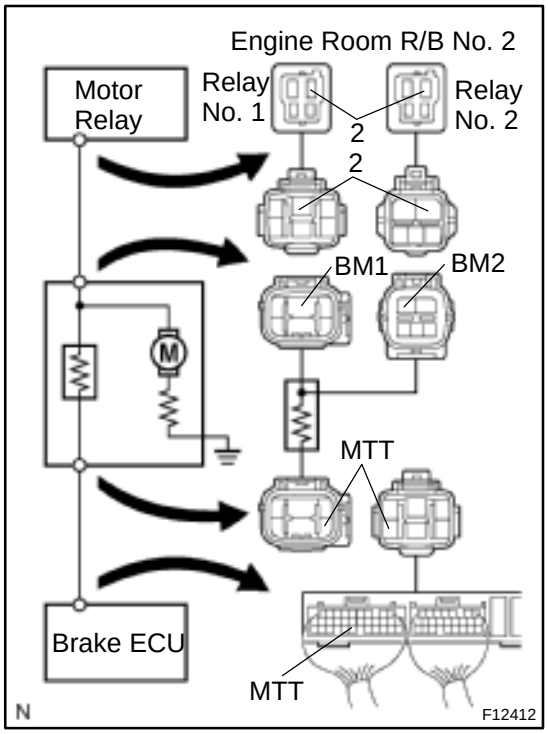

CHECK:

(a) Check continuity betwee terminal 2 of engine room R/B No. 2 (for hydro motor relay No. 1) and terminal MTT of brake ECU.

(b) Check continuity between terminal 2 of engine room R/B No. 2 (for hydro motor relay No. 2) and terminal MTT of brake ECU.

OK:

Continuity

HINT:

There is resistance of 33 ± 3 Ω between terminals BM1or BM2 and MTT of the hydraulic brake booster.

NG → **Repair or replace harness, connector or hydraulic brake booster.**

OK

6	**Check for open and short circuit in harness and connector between hydro motor relay No. 1 and No. 2 and brake ECU (See page IN–41).**

NG → **Repair or replace harness or connector.**

OK

Check and replace brake ECU.

DI6AC–02

DTC	C1254/54	Pressure Switch Circuit

CIRCUIT DESCRIPTION

DTC No.	DTC Detecting Condition	Trouble Area
C1254/54	Either of the following 1. or 2. is detected: 1. After turning the ignition switch ON, short or open circuit in pressure switch (PL) continued for more than 1 sec. 2. After turning the ignition switch ON open in pressure switch (PH) continued for more than 1 sec.	• Pressure switch (PH or PL) • Pressure switch circuit

WIRING DIAGRAM

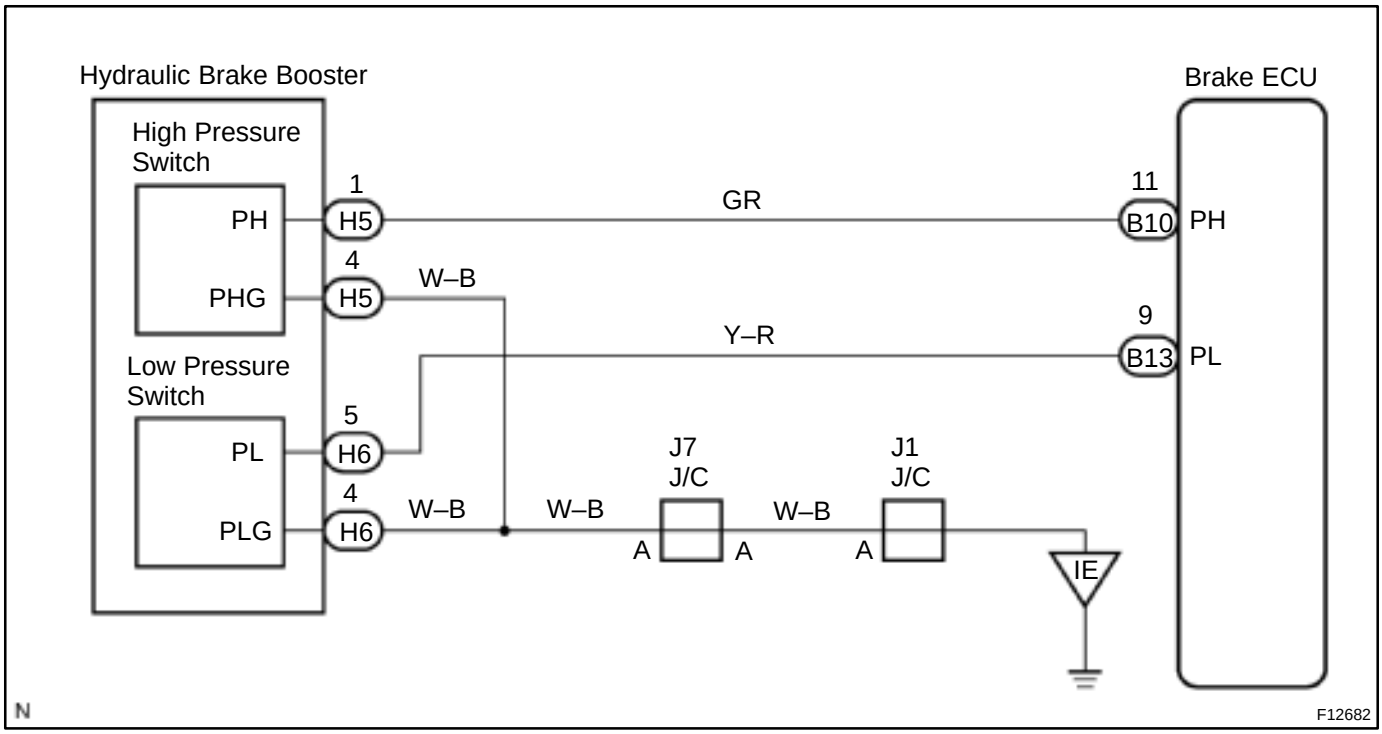

INSPECTION PROCEDURE

1	**Check pressure switch (PL) resistance.**

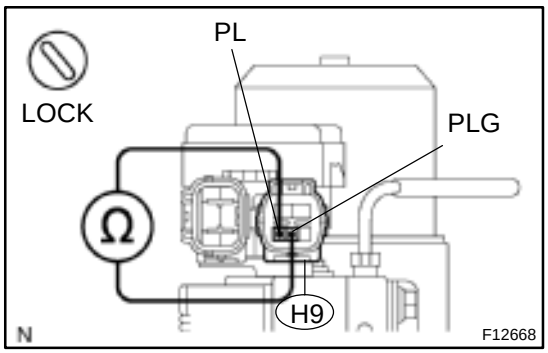

PREPARATION:

(a) Disconnect the connector (H9) from the hydraulic brake booster.

(b) With ignition switch OFF, depress the brake pedal more than 40 times to decrease the accumulator pressure.

HINT:

When a pressure in power supply system is released, reaction force becomes heavy and stroke becomes shorter.

CHECK:

Measure resistance between terminals PL and PLG of hydraulic brake booster connector.

OK:

Resistance: 5.1 – 6.3 kΩ

HINT:

After inspection, connect the connector and clear the DTC (See page DI–353).

NG → **Replace hydraulic brake booster assembly.**

OK

2	Check pressure switch (PH) resistance.

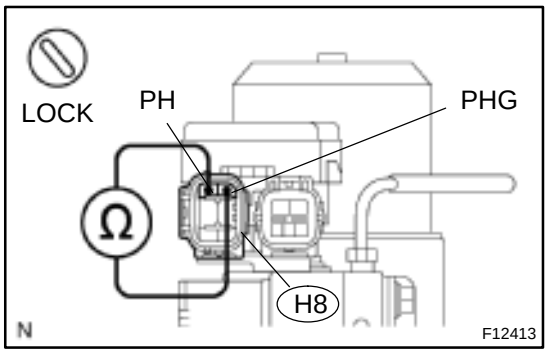

PREPARATION:

(a) Disconnect the connector (H8) from the hydraulic brake booster.

(b) With ignition switch OFF, depress the brake pedal more than 40 times to decrease the accumulator pressure.

HINT:

When a pressure in power supply system is released, reaction force becomes heavy and stroke becomes shorter.

CHECK:

Measure resistance between terminals PH and PHG of hydraulic brake booster connector.

OK:

Resistance: 0.9 – 1.1 kΩ

HINT:

After inspection, connect the connector and clear the DTC (See page DI–353).

NG → **Replace hydraulic brake booster assembly.**

OK

3	Check for open and short circuit in harness and connector between each pressure switch and brake ECU (See page IN–41).

NG → **Repair or replace harness or connector.**

OK

Check and replace brake ECU.

DI6AD–02

DTC	C1256/56	Accumulator Low Pressure Malfunction

CIRCUIT DESCRIPTION

DTC No.	DTC Detecting Condition	Trouble Area
C1256/56	Either of the following 1. through 5. is detected: 1. With the vehicle running, when the pressure switch (PL) detects high pressure, although ABS, EBD or RBS does not control, the pressure switch (PL) detects low pressure for more than 1.4 sec. 2. With the vehicle running, when the pressure switch (PL) detects high pressure, although ABS, EBD or RBS controls, the pressure switch (PL) detects low pressure for more than 0.2 sec. 3. After the ignition switch is turned ON, the pressure switch (PL) detects low pressure for more than 60 sec. 4. After the ignition switch is ON, PL (Low pressure switch) turns ON while PH (High pressure switch) is stuck to ON, or PL cannot turn OFF for 1.4 sec. or more when running the vehicle without ABS, EBD or RBS control. 5. After the ignition switch is ON, PL turns ON while PH is stuck to ON, or PL cannot turn OFF for 0.2 sec. or more when running the vehicle under ABS, EBD or RBS control.	• Accumulator • Pressure switch (PH or PL) • Hydraulic brake booster pump motor

WIRING DIAGRAM

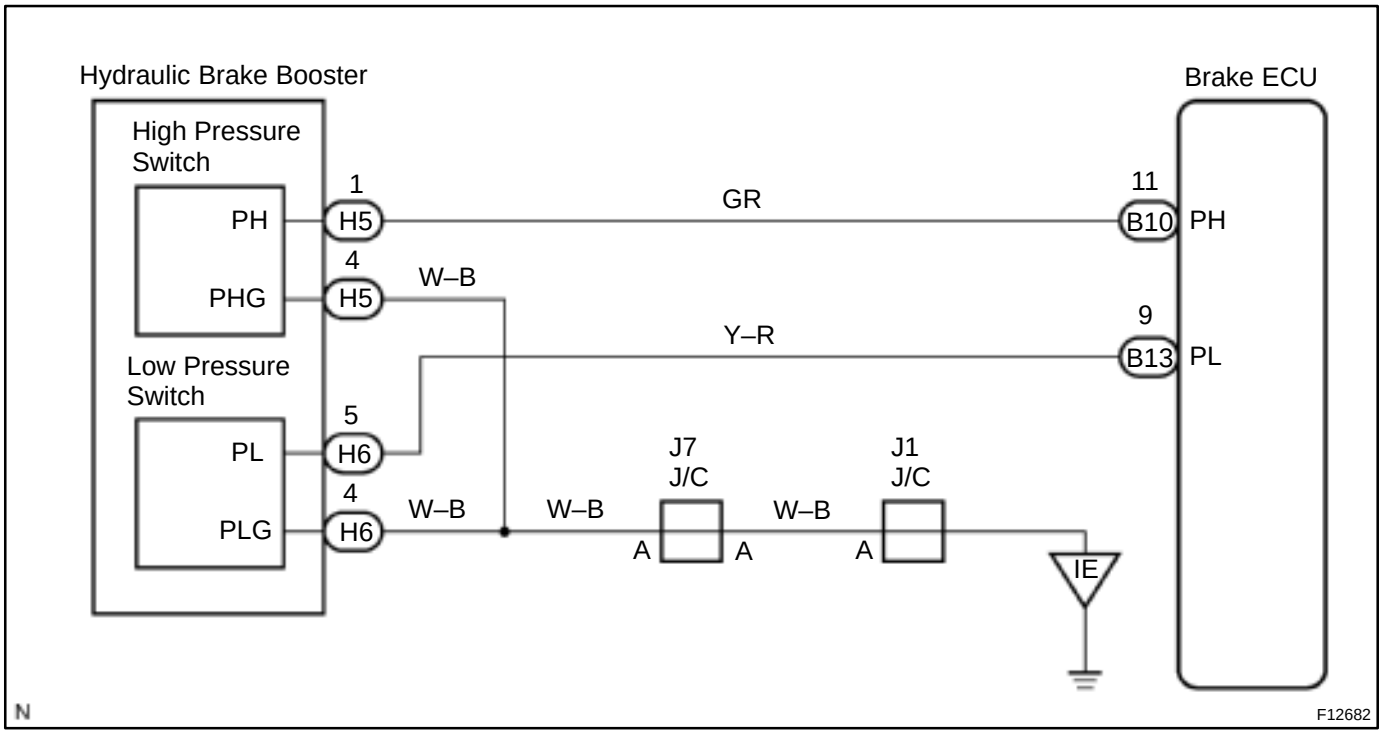

INSPECTION PROCEDURE

1	**Check accumulator operation.**

PREPARATION:

(a) Turn the ignition switch OFF, and depress the brake pedal 40 times or more.

HINT:

When a pressure in power supply system is released, reaction force becomes heavy and stroke becomes shorter.

(b) Install the LSPV gauge (SST) to rear wheel cylinder and bleed air.

SST 09709–29018

CHECK:

Depress the brake pedal with force of more than 343 N (35 kgf, 77 lbf) and turn the ignition switch ON, then check the rear wheel cylinder pressure when an increase of pressure changes from acutely to mildly.

OK:

5,099 – 8,924 kPa (52 – 91 kgf/cm^2, 740 – 1,294 psi) at 20˚C (68˚F)

HINT:

If the value is not within the standard, cool the engine room and check it again.

NG → **Replace accumulator.**

OK

2	Check operation of hydraulic brake booster pump motor.

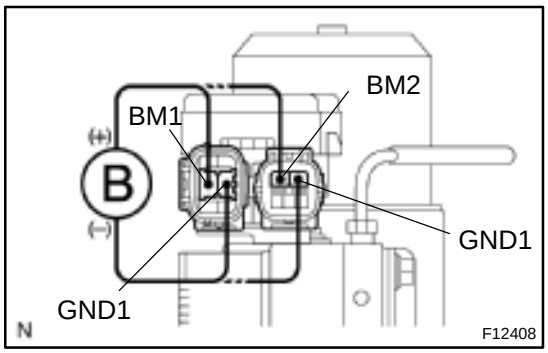

PREPARATION:

Disconnect the 2 connectors from the hydraulic brake booster.

CHECK:

Connect battery positive ⊕ lead to BM1 or BM2 terminal and battery negative ⊖ lead to GND1 or GND2 terminal of the hydraulic brake booster (pump motor) connector.

OK:

The operation sound of the pump motor should be heard.

NG	Go to step 7.

OK

3	Check pressure switch (PH) operation.

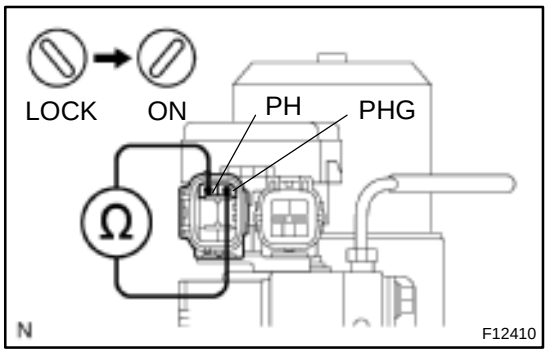

PREPARATION:

(a) Turn the ignition switch OFF, and depress the brake pedal 40 times or more.

HINT:

When a pressure in power supply system is released, reaction force becomes heavy and stroke becomes shorter.

(b) Install the LSPV gauge (SST) to the rear wheel cylinder and bleed air.

SST 09709–29018

CHECK:

While checking the voltage between terminals PH and PHG of hydraulic brake booster, depress the brake pedal with force of more than 343 N (35 kgf, 77 lbf) and turn the ignition switch ON, then check the rear wheel cylinder pressure when voltage changes from 6 V to 0 V.

OK:

12,553 – 20,104 kpa (128 – 205 kgf·cm^2, 1,820 – 2,916 psi)

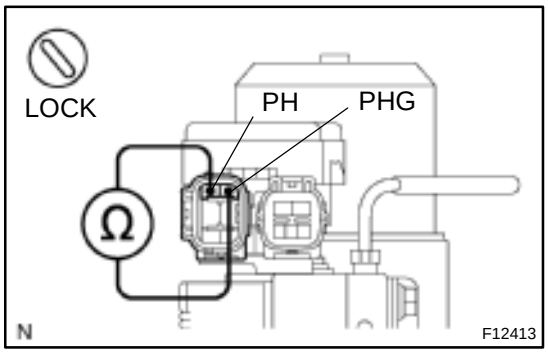

CHECK:

While checking the resistance between terminals PH and PHG, depress the brake pedal changing the force in the range of 197 N (20 kgf, 44 lbf) to 343 N (35 kgf, 77 lbf) and check the rear wheel cylinder pressure when resistance changes from 0 kΩ to 1 kΩ between PH and PHG.

OK:

11,964 – 18,240 kpa (122 – 186 kgf·cm^2, 1,735 – 2,645 psi)

HINT:

After inspection, connect the connector, fill brake reservoir with brake fluid and clear the DTC (See page DI–353).

OK	Go to step 5.

NG

4	**Check for open circuit in harness and connector between pressure switch (PH) and brake ECU (See page IN–41).**

NG → **Repair or replace harness or connector.**

OK

Replace hydraulic brake booster assembly.

5	**Check pressure switch (PL) operation.**

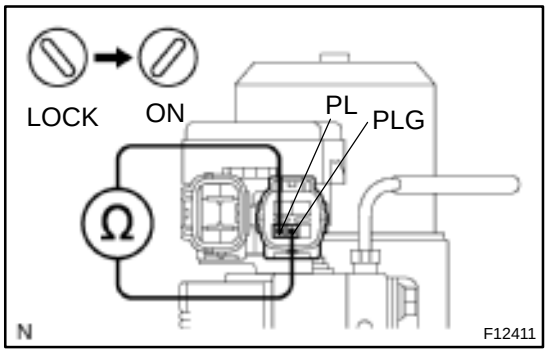

PREPARATION:

(a) Turn the motor switch OFF, and depress the brake pedal 40 times or more.

HINT:

When a pressure in power supply system is released, reaction force becomes heavy and stroke becomes shorter.

(b) Install the LSPV gauge (SST) to the rear wheel cylinder and bleed air.

SST 09709 –29018

CHECK:

While checking the resistance between terminals PL and PLG of hydraulic brake booster, depress the brake pedal with force of more than 343 N (35 kgf, 77 lbf) and turn the ignition switch ON, then check the rear wheel cylinder pressure when the resistance changes from 5.7 kΩ to 1.0 kΩ.

OK:

9,022 – 15,102 kpa (92 – 154 kgf·cm^2, 1,308 – 2,190 psi)

CHECK:

While checking the resistance between terminals PL and PLG of hydraulic brake booster, depress the brake pedal changing the force in the range of 197 N (20 kgf, 44 lbf) to 343 N (35 kgf, 77 lbf) and check the rear wheel cylinder pressure when resistance changes from 1.0 kΩ to 5.7 kΩ.

OK:

8,532 – 13,337 kpa (87 – 136 kgf·cm^2, 1,237 – 1,934 psi)

HINT:

After inspection, connect the connector, fill brake reservoir with brake fluid and clear the DTC (See page DI–353).

NG → **Replace hydraulic brake booster assembly.**

OK

6	**Check pressure switch (PH) and pressure switch (PL).**

CHECK:

Compare the pressure value of the rear wheel cylinder measured in check pressure switch (PL) operation with the one measured in check pressure switch (PH) operation.

OK:

- **Pressure when the voltage between PH and PHG becomes 6 to 0 V > pressure when the resistance between PL and PLG becomes 5.7 kΩ to 1.0 kΩ.**
- **Pressure when the resistance between PH and PHG becomes 0 kΩ to 1 kΩ > pressure when the resistance between PL and PLG becomes 1.0 kΩ to 5.7 kΩ.**

NG → **Replace hydraulic brake booster assembly.**

OK

Check and replace brake ECU.

7	**Check for open or short circuit in harness and connector between hydraulic brake booster pump motor and hydraulic brake booster (See page IN–41).**

NG → **Replace wire harness.**

OK

8	**Check hydraulic brake booster pump motor (See page BR–48).**

NG → **Replace hydraulic brake booster pump motor.**

OK

Replace hydraulic brake booster.

DI29D–07

DTC	C1257/57	Power Supply Drive Circuit

CIRCUIT DESCRIPTION

DTC No.	DTC Detecting Condition	Trouble Area
C1257/57	After turning the ignition switch ON, open or short circuit in circuit of power supply drive system inside ECU continues for more than 1.5 sec.	• Battery • Power source circuit

WIRING DIAGRAM

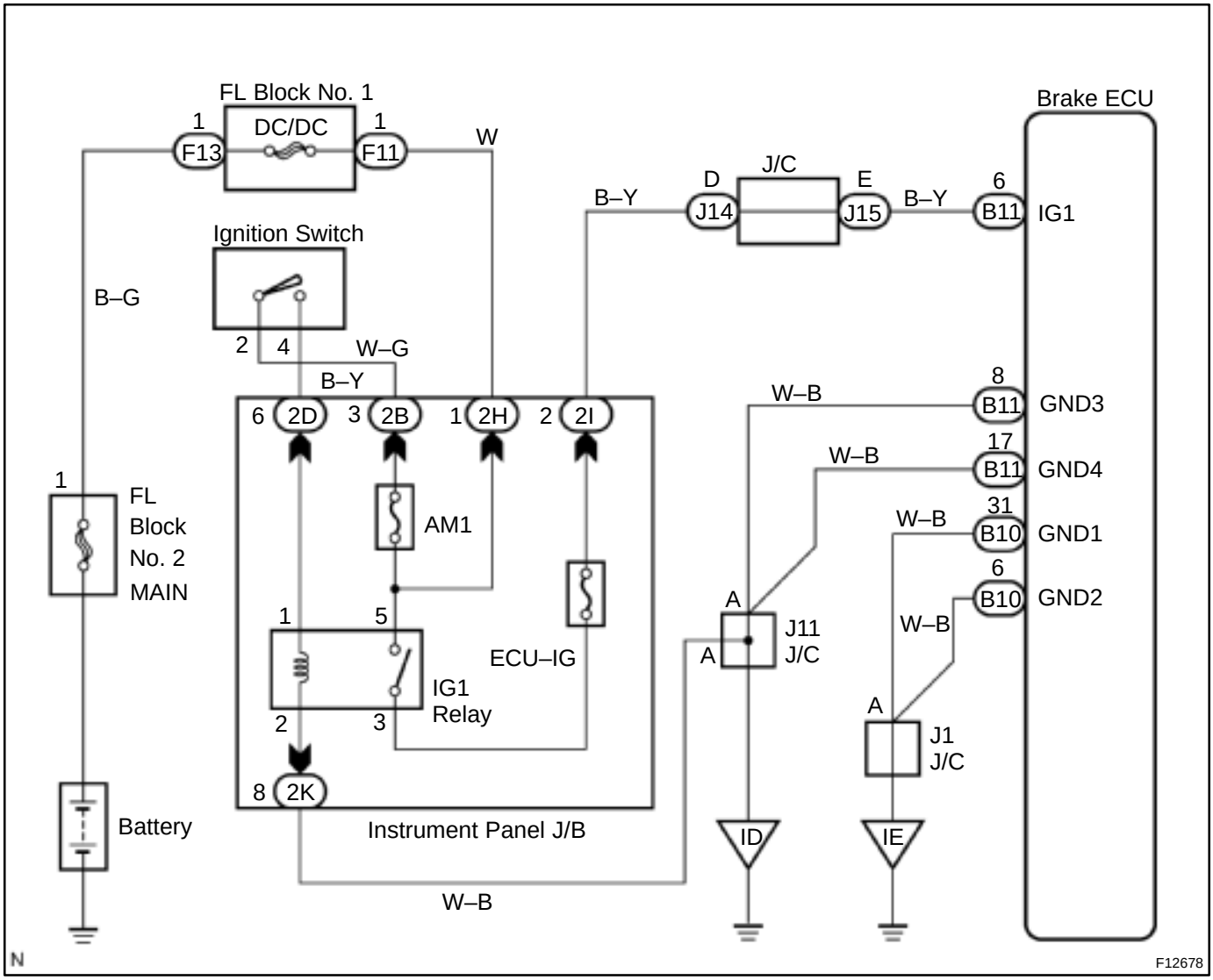

INSPECTION PROCEDURE

1	**Check ECU–IG fuse.**

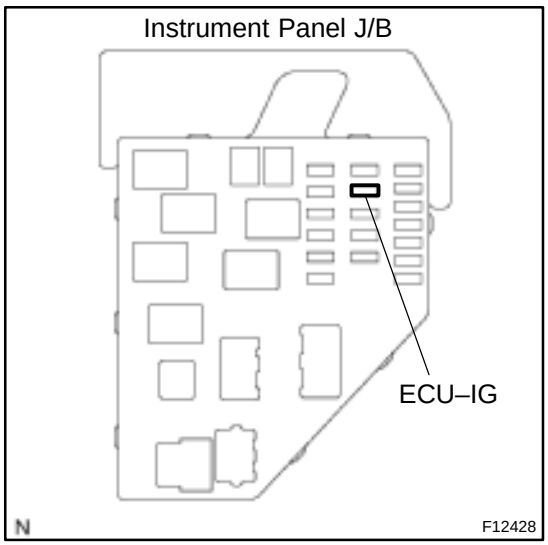

PREPARATION:
Remove the ECU–IG fuse from instrument panel J/B.
CHECK:
Check continuity of ECU–IG fuse.
OK:
Continuity

NG → **Check for short circuit in all the harness and components connected to ECU–IG fuse (See attached wiring diagram).**

OK

2	**Check battery positive voltage.**

OK:
Voltage: 10 – 14 V

NG → **Check and repair the charging system (See page HV–39).**

OK

3	Check voltage of the ECU IG power source.

In case of using the TOYOTA hand–held tester:

PREPARATION:

(a) Connect the TOYOTA hand–held tester to the DLC3.

(b) Turn the ignition switch ON, and push the TOYOTA hand–held tester main switch ON.

(c) Select the DATALIST mode on the TOYOTA hand–held tester.

CHECK:

Check the voltage condition output from the ECU displayed on the TOYOTA hand–held tester.

OK:

"Normal" is displayed.

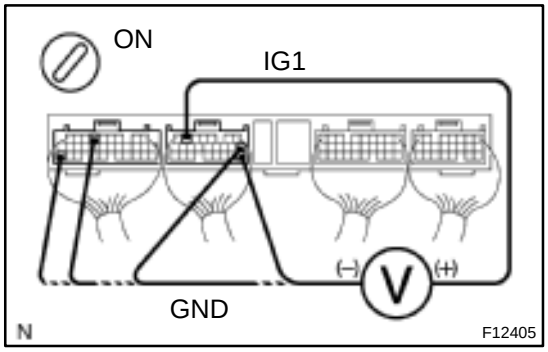

In case of not using the TOYOTA hand–held tester:

PREPARATION:

Remove the brake ECU with connectors still connected.

CHECK:

Turn the ignition switch ON, measure voltage between terminals IG1 and GND of brake ECU connector.

OK:

Voltage: 10 – 14 V

OK	Check and replace brake ECU.

NG

4	Check continuity between terminal GND of brake ECU connector and body ground.

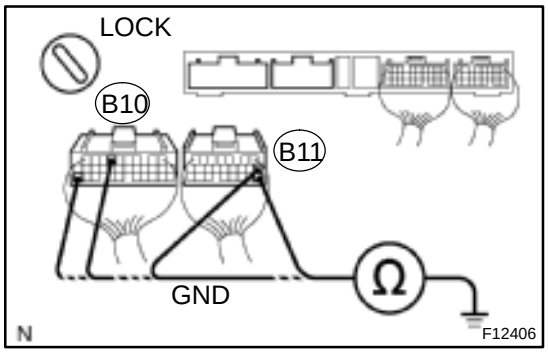

PREPARATION:

Disconnect the 2 connectors (B10, B11) from the brake ECU.

CHECK:

Measure resistance between terminal GND of brake ECU harness side connector and body ground.

OK:

Resistance: 1 Ω or less

NG	Repair or replace harness or connector.

OK

Check for open circuit in harness and connector between brake ECU and battery (See page IN–41).

DI7OQ–01

DTC	Always ON	Malfunction in ECU

CIRCUIT DESCRIPTION

DTC No.	DTC Detecting Condition	Trouble Area
Always ON	Either of the following 1. or 2. is detected: 1. ECU connectors are disconnected from ECU 2. There is a malfunction in ECU internal circuit	• Battery • Charging system • Power source circuit • Brake ECU

HINT:
There is a case that TOYOTA hand–held tester cannot be used when ECU is abnormal.

WIRING DIAGRAM

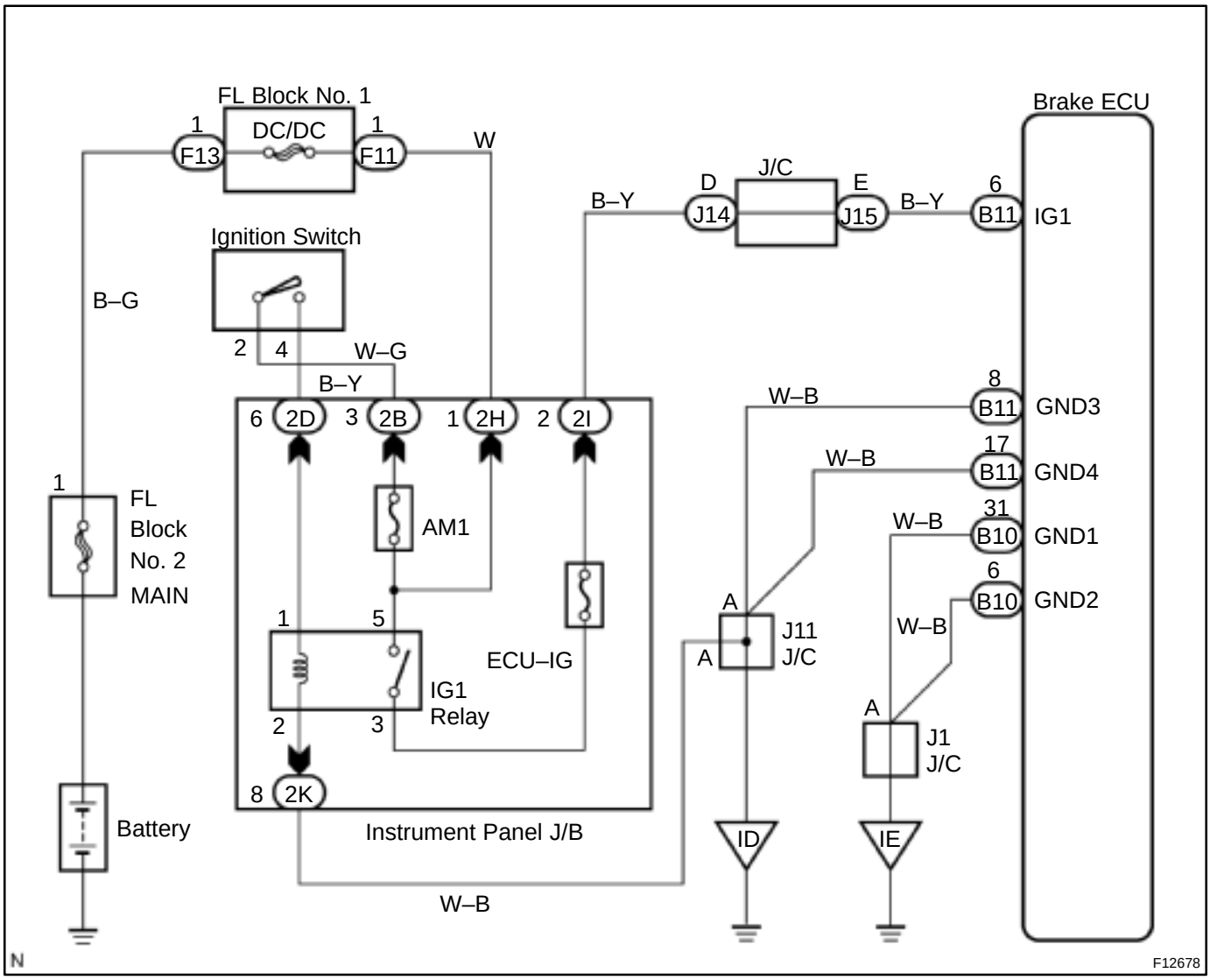

INSPECTION PROCEDURE

1	**Check that brake ECU connectors are securely connected to brake ECU.**

NO → **Connect connectors to brake ECU.**

YES

2	**Is DTC output?**

Check DTC on page DI–353.

YES → **Repair circuit indicated by output code.**

NO

3	**Is normal code displayed?**

YES → **Check ABS solenoid relay. Check for short circuit in harness and connector between ABS solenoid relay and DLC3 (See page IN–41).**

NO

4	**Does ABS warning light go off?**

YES → **Check for open or short circuit in harness and connector between ECU–IG fuse and brake ECU (See page IN–41).**

NO

5	Check battery positive voltage.

CHECK:

Check the battery positive voltage.

OK:

Voltage: 10 – 14 V

NG → **Check and repair charging system (See page HV–39).**

OK

6	Check operation of the ABS warning light.

In case of using the TOYOTA hand–held tester:

PREPARATION:

(a) Connect the TOYOTA hand–held tester to the DLC3.

(b) Turn the ignition switch ON, and push the TOYOTA hand–held tester main switch ON.

(c) Select the ACTIVE TEST mode on the TOYOTA hand–held tester.

CHECK:

Check that "ON" and "OFF" of the ABS warning light can be shown on the combination meter by the TOYOTA hand–held tester.

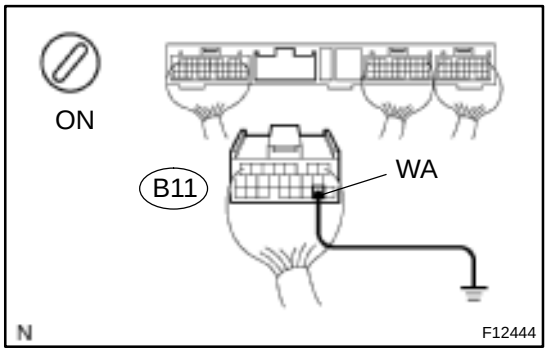

In case of not using the TOYOTA hand–held tester:

(a) Disconnect the connector (B11) from the brake ECU.

(b) Using service wire, connect terminal WA of brake ECU harness side connector and body ground.

(c) Turn the ignition switch ON.

OK:

ABS warning light goes off.

OK → **Check and replace brake ECU.**

NG

Check for short circuit in harness and connector between combination meter and brake ECU, combination meter and DLC3 (See page IN–41).
Check ABS solenoid relay circuit (See page DI–376).

ABS Warning Light Circuit

CIRCUIT DESCRIPTION

If the ECU detects trouble, it lights the ABS warning light while at the same time prohibiting ABS control. At this time, the ECU records a DTC in memory.
Connect terminals Tc and CG of the DLC3 to make the ABS warning light blink and output the DTC.

WIRING DIAGRAM

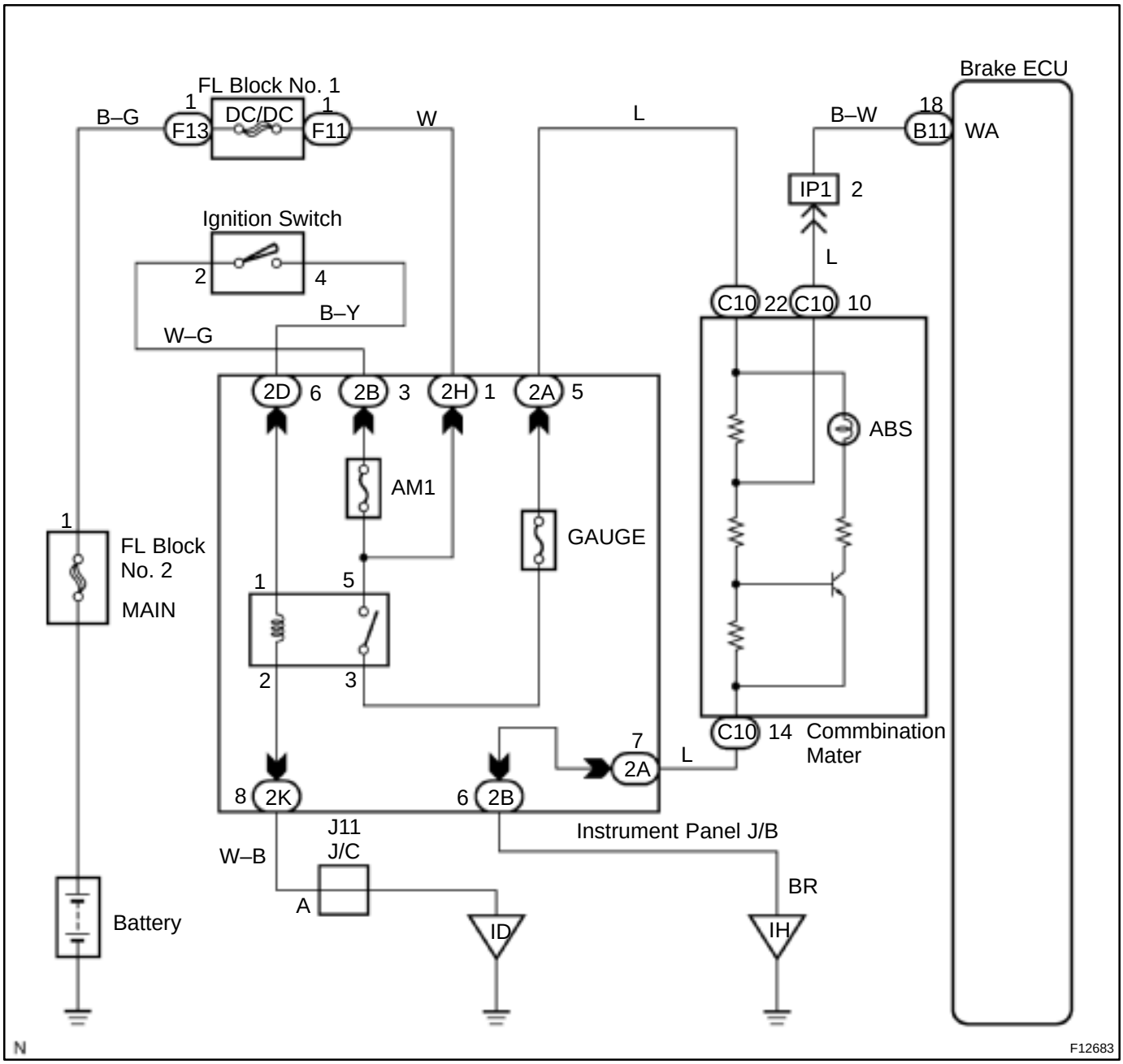

INSPECTION PROCEDURE

HINT:

Troubleshoot in accordance with the chart below for each trouble symptom.

ABS warning light does not light up	*1
ABS warning light remains on	*2

*1: Start the inspection from step 1 in case of using the TOYOTA hand–held tester and start from step 2 in case of not using TOYOTA hand–held tester.

*2: After inspection with step 4, start the inspection from step 5 in case of using the TOYOTA hand–held tester and start from step 6 in case of not using TOYOTA hand–held tester.

1	**Check operation of the brake warning light.**

PREPARATION:

(a) Connect the TOYOTA hand–held tester to the DLC3.

(b) Turn the ignition switch ON, and push the TOYOTA hand–held tester main switch ON.

(c) Select the ACTIVE TEST mode on the TOYOTA hand–held tester.

CHECK:

Check that ”ON” and ”OFF” of the ABS warning light can be shown on the combination meter on the TOYOTA hand–held tester.

OK → **Check and replace brake ECU.**

NG

2	**Check ABS warning light.**

See combination meter troubleshooting on page BE–2.

NG → **Repair bulb or combination meter assembly.**

OK

3	Check ABS solenoid relay.

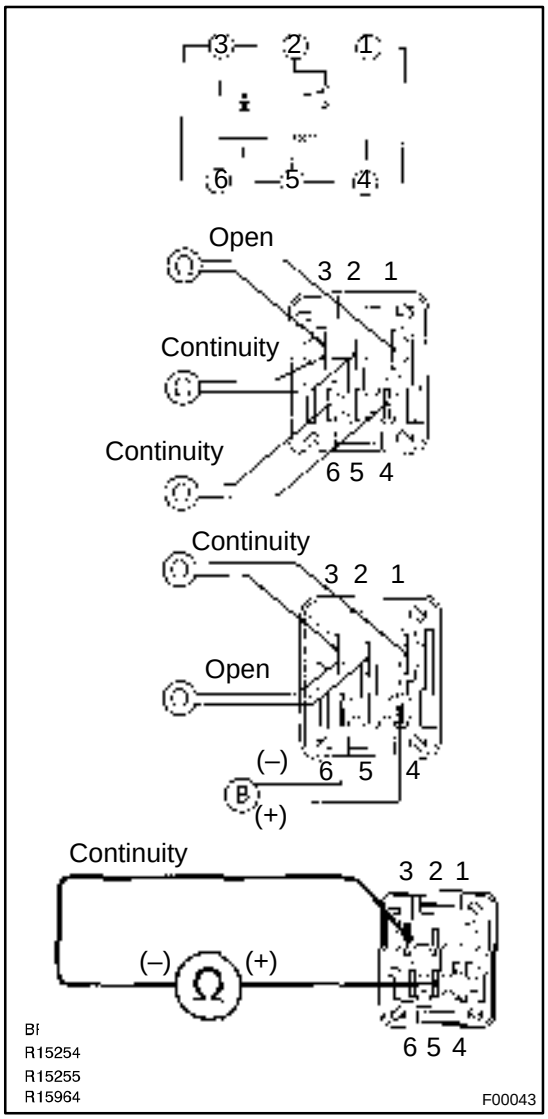

PREPARATION:

Remove the ABS solenoid relay from engine room R/B No. 3.

CHECK:

Check continuity between each terminal of ABS solenoid relay.

OK:

Terminals 4 and 6	Continuity (Reference value 80 Ω)
Terminals 2 and 3	Continuity
Terminals 1 and 3	Open

CHECK:

(a) Apply battery positive voltage between terminals 4 and 6.

(b) Check continuity between each terminal of ABS solenoid relay.

OK:

Terminals 2 and 3	Open
Terminals 1 and 3	Continuity

CHECK:

Connect the ⊕ test lead to terminal 5 and the ⊖ lead to terminal 3. Check continuity between the terminals.

OK:

Continuity

If there is no continuity, connect the ⊖ test lead to terminal 5 and the ⊕ lead to terminal 3. Recheck continuity between terminals.

NG → **Replace ABS solenoid relay.**

OK

Repair or replace and check for open circuit in harness and connector between DLC3 and ABS solenoid relay and body ground (See page IN–41).

4	**Check that the brake ECU connectors are securely connected to the brake ECU.**

NO → **Connect the connector to the brake ECU.**

YES

5	**Check operation of the ABS warning light (See step 1).**

OK → **Check and replace brake ECU.**

NG

6	**Is DTC output?**

Check DTC on page DI–353.

YES → **Repair circuit indicated by the output code.**

NO

7	**Check ABS solenoid relay (See step 3).**

NG → **Replace ABS solenoid relay.**

OK

Check for short circuit in harness and connector between DLC3 and ABS solenoid relay (See page IN–41).

DI29G–14

BRAKE Warning Light Circuit

CIRCUIT DESCRIPTION

The BRAKE warning light lights up when the brake fluid is insufficient, the parking brake is applied or the EBD is defective.

The BRAKE warning light also lights up when DTC No. C1213/63 or C1259/59 is detected, however, the EBD is not inhibited in this case.

WIRING DIAGRAM

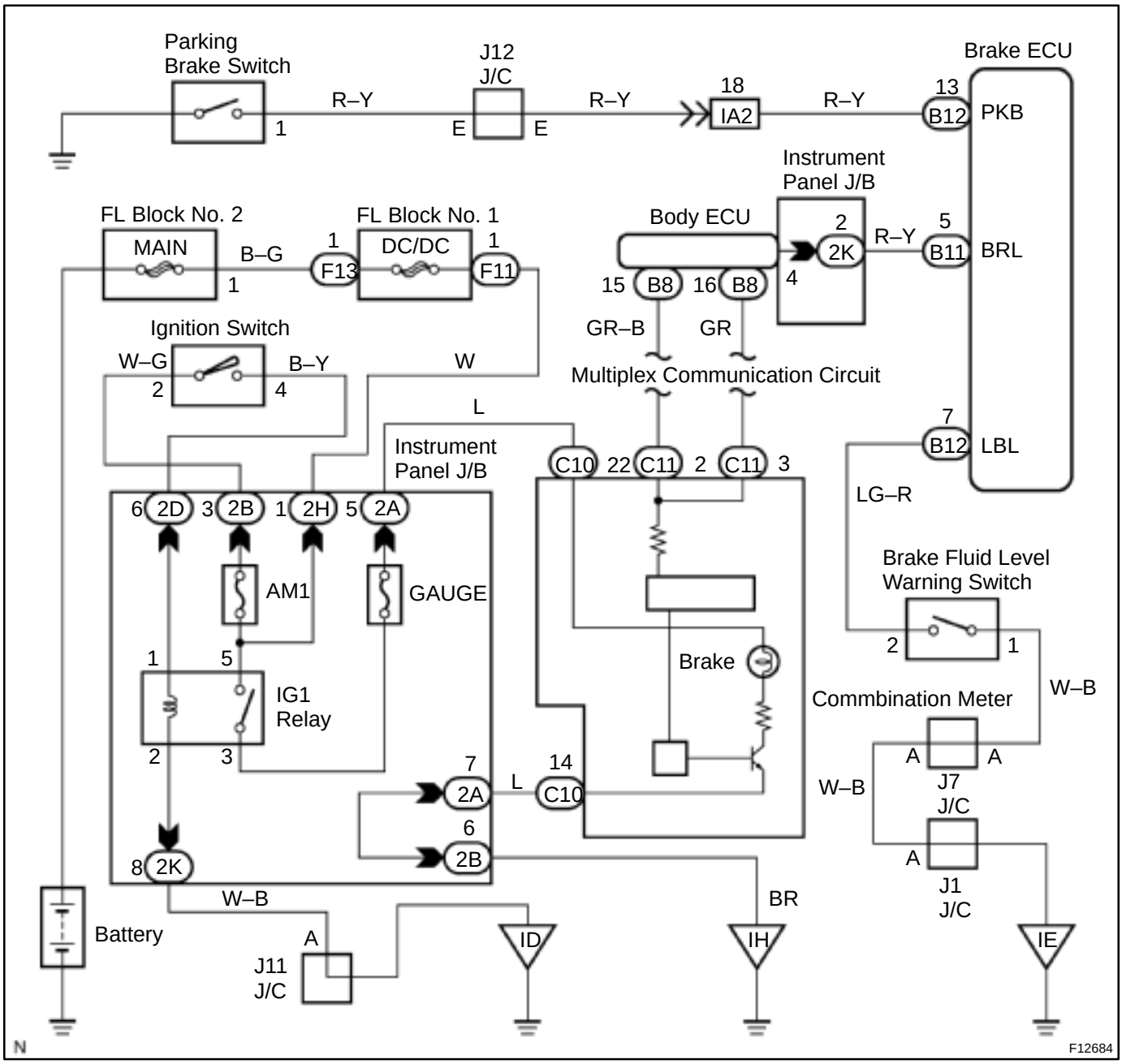

INSPECTION PROCEDURE

HINT:

Start the inspection from step 1 in case of using the TOYOTA hand–held tester and start from step 2 in case of not using the TOYOTA hand–held tester.

1	**Check operation of the BRAKE warning light.**

PREPARATION:

(a) Release the parking brake pedal.
(b) Connect the TOYOTA hand–held tester to the DLC3.
(c) Turn the ignition switch ON, and push the TOYOTA hand–held tester main switch ON.
(d) Select the ACTIVE TEST mode on the TOYOTA hand–held tester.

CHECK:

Check that ”ON” and ”OFF” of BRAKE warning light can be shown on the combination meter by the TOYOTA hand–held tester.

OK → **Check and replace brake ECU.**

NG

2	**Check parking brake switch circuit (See page BE–2).**

NG → **Repair or replace parking brake switch circuit.**

OK

3	**Check brake fluid level warning switch circuit (See page BE–2).**

NG → **Repair or replace brake fluid level warning switch circuit.**

OK

4	**Is DTC output for ABS ?**

Yes → **Repair circuit indicated by the output code.**

No

5	**Check BRAKE warning light.**

See combination meter troubleshooting on page BE–2.

NG → **Repair or replace combination meter.**

OK

6	**Check multiplex communication system (See page DI–752).**

NG → **Repair or replace multiplex communication circuit.**

OK

Check and replace brake ECU.

DI29H–07

Brake Warning Buzzer Circuit

CIRCUIT DESCRIPTION

The brake warning buzzer sounds while the accumulator pressure is abnormally low.

WIRING DIAGRAM

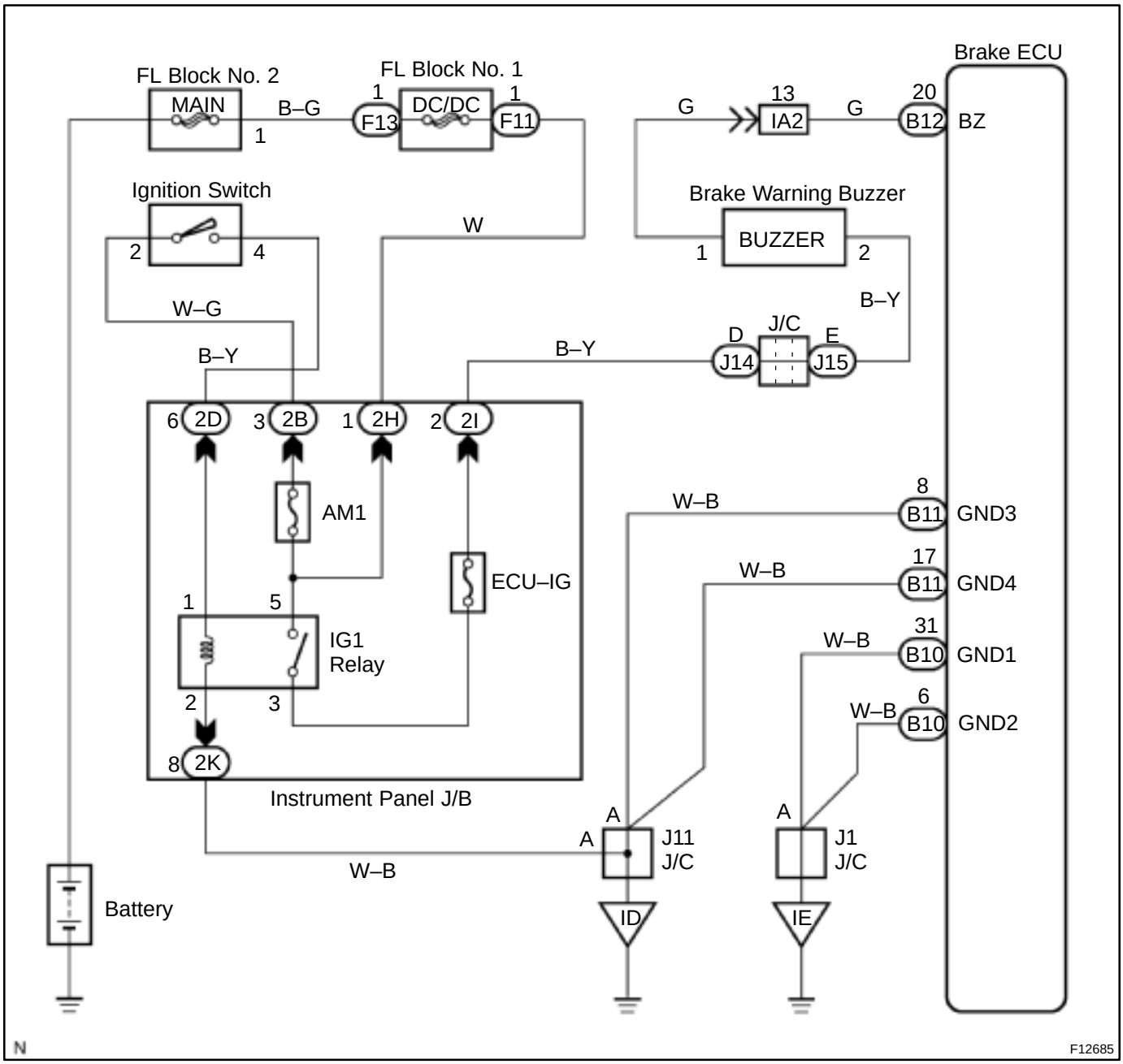

INSPECTION PROCEDURE

HINT:

Start the inspection from step 1 in case of using the TOYOTA hand–held tester and start from step 2 in case of not using the TOYOTA hand–held tester.

1	**Check operation of the brake warning buzzer.**

PREPARATION:

(a) Connect the TOYOTA hand–held tester to the DLC3.
(b) Turn the ignition switch ON, and push the TOYOTA hand–held tester main switch ON.
(c) Select the ACTIVE TEST mode on the TOYOTA hand–held tester.

CHECK:

Check that brake warning buzzer sounds ”ON” and ”OFF” with the TOYOTA hand–held tester.

OK → **Check and replace brake ECU.**

NG

2	**Check brake warning buzzer.**

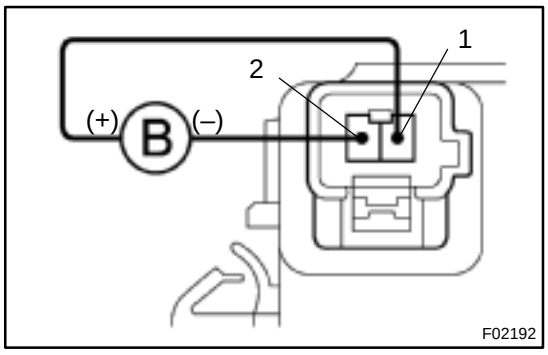

PREPARATION:

Disconnect the brake warning buzzer connector.

CHECK:

Apply battery positive voltage to the terminals 1 and 2 of BRAKE warning buzzer connector, check that the brake warning buzzer sounds.

NG → **Replace brake warning buzzer.**

OK

3	**Check for open and short circuit in harness and connector between brake ECU and brake warning buzzer (See page IN–41).**

NG → **Repair or replace harness or connector.**

OK

Check and replace brake ECU.

Tc Terminal Circuit

CIRCUIT DESCRIPTION

Connecting terminals Tc and CG of the DLC3 causes the ECU to display the DTC by flashing the ABS warning light.

WIRING DIAGRAM

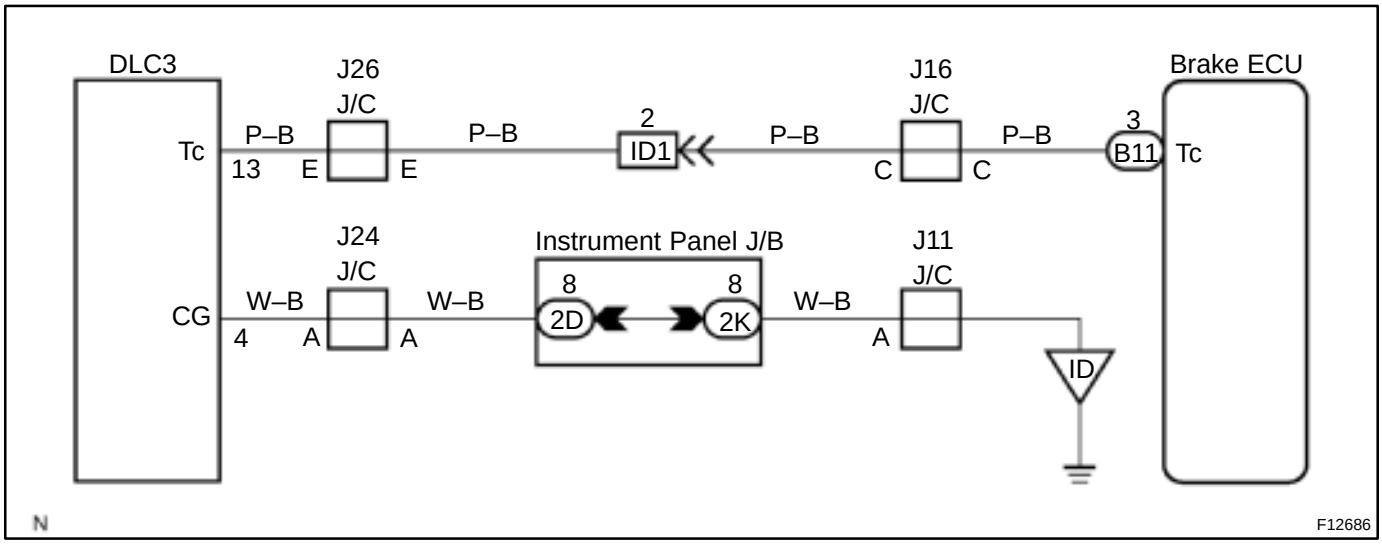

INSPECTION PROCEDURE

1	**Check voltage between terminals Tc and CG of DLC3.**

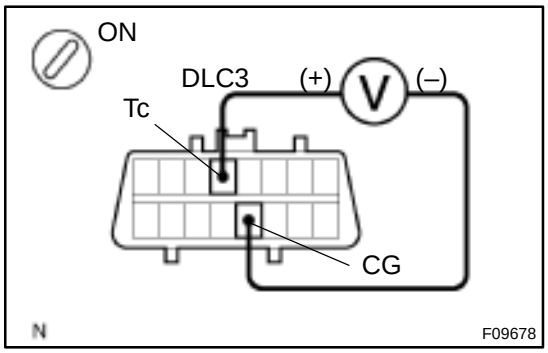

PREPARATION:

Turn the ignition switch ON.

CHECK:

Measure voltage between terminal Tc and CG of DLC3.

OK:

Voltage: 10 – 14 V

OK	**If ABS warning light does not blink even after Tc and CG are connected, the ECU may be defective.**

NG

2	**Check for open and short circuit in harness and connector between brake ECU and DLC3, DLC3 and body ground (See page IN–41).**

NG → **Repair or replace harness or connector.**

OK

Check and replace brake ECU.

Ts Terminal Circuit

CIRCUIT DESCRIPTION

The sensor check circuit detects abnormalities in the speed sensor signal which cannot be detected by the DTC check.
Connecting terminals Ts and CG of the DLC3 starts the check.

WIRING DIAGRAM

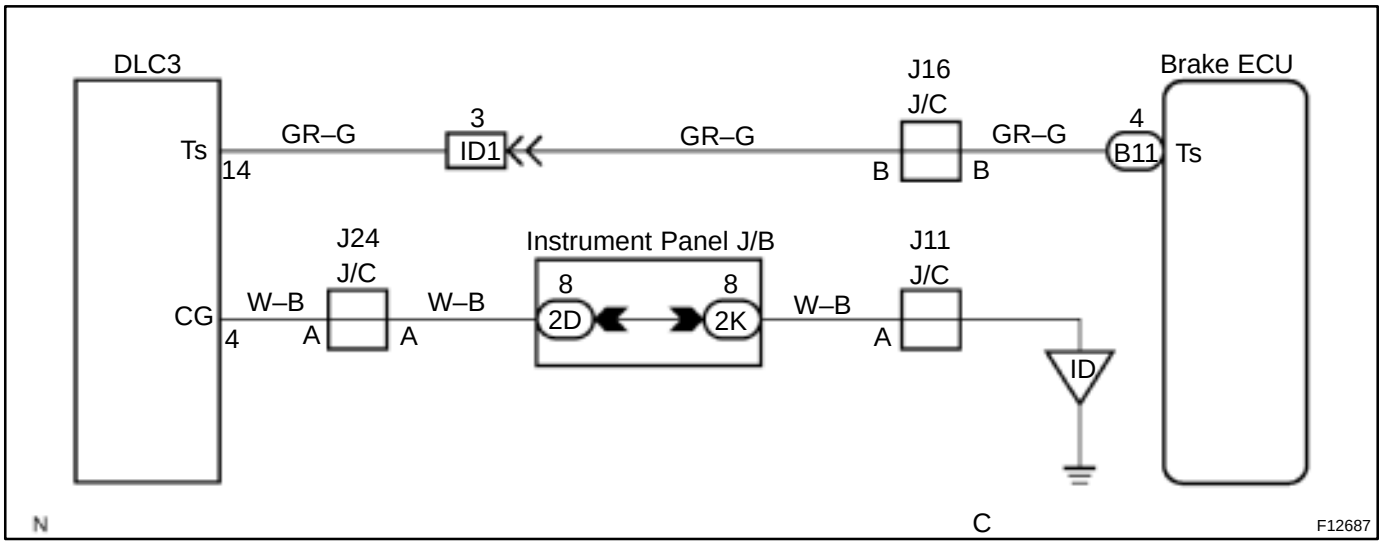

INSPECTION PROCEDURE

1	**Check voltage between terminals Ts and CG of DLC3.**

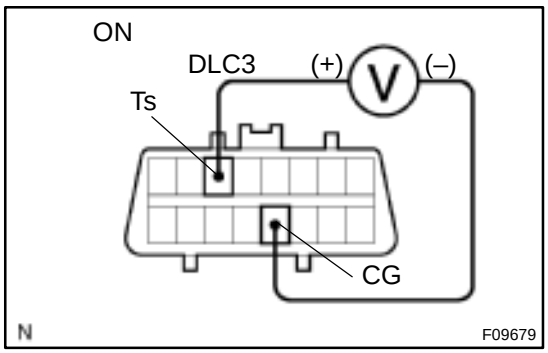

CHECK:

(a) Turn the ignition switch ON.

(b) Measure voltage between terminals Ts and CG of DLC3.

OK:

Voltage: 10 – 14 V

OK → **If ABS warning light does not blink even after Ts and CG are connected, the ECU may be defective.**

NG

2	**Check for open and short circuit in harness and connector between brake ECU and DLC3, DLC3 and body ground (See page IN–41).**

NG → **Repair or replace harness or connector.**

OK

Check and replace brake ECU.

DI7QW–01

PRE–CHECK

1. DIAGNOSIS SYSTEM

(a) Check the indicator.
When the ignition switch is turned ON, check that the PS warning light goes on for 1.5 seconds.

HINT:

- If the indicator check result is not normal, proceed to troubleshooting for the PS warning light circuit (See page DI–486).

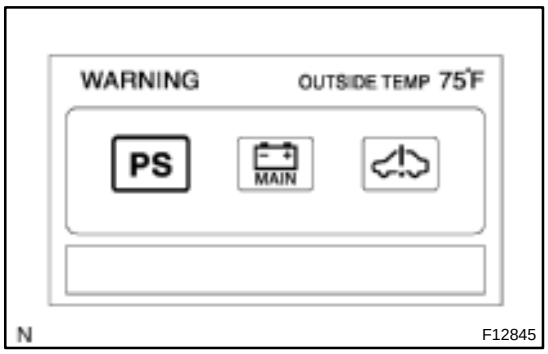

- When the EMPS system is faulty, the master warning light in the combination meter and the PS warning light in the multiinformation display lights up.



(b) In case of not using TOYOTA hand–held tester:
Check the DTC.
(1) Using SST, connect terminals Tc and CG of the DLC3.

SST 09843–18040

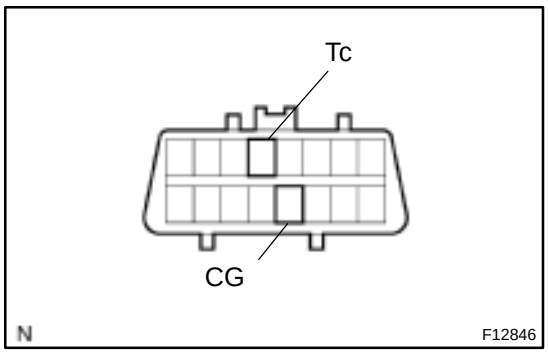

(2) Remove the EMPS ECU with connector still connected.
(3) Connect the both terminals of the 1kΩ resistance and LED (Light Emitting Diode) circuit to terminals WL and PGND of the EMPS ECU.
(4) Turn the ignition switch ON.
(5) Read the DTC from the PS warning light.

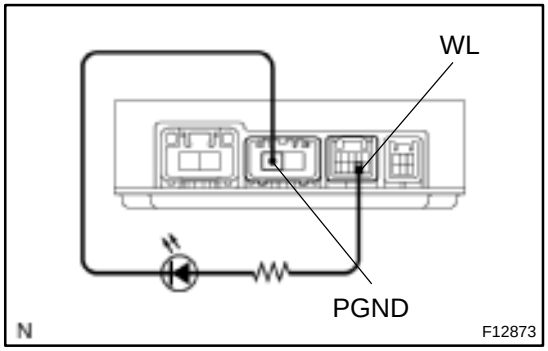

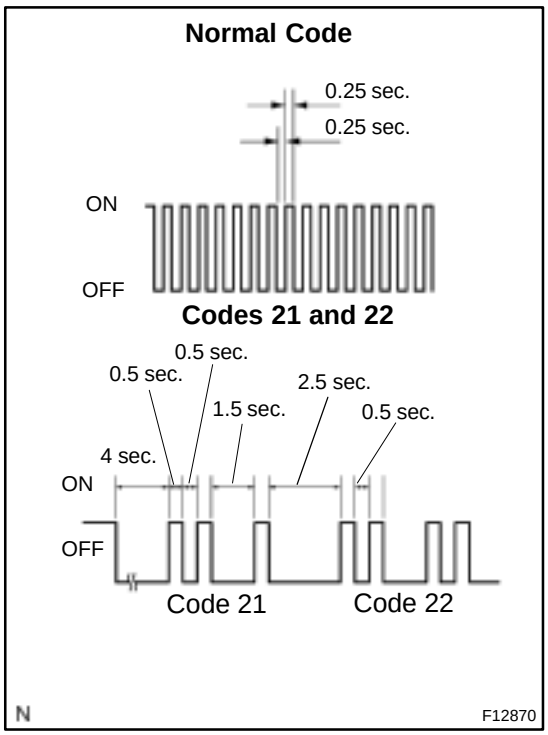

HINT:

- If no code appears, inspect the diagnostic circuit and PS warning light circuit (See page DI–491 or DI–486).
- As an example, the blinking patterns for normal code and codes 21 and 22 are shown on the left.
  (6) Codes are explained in the DTC chart on page DI–460.
  (7) After completing the check, disconnect terminals Tc and CG of the DLC3, and turn off the display.
  If 2 or more malfunctions are indicated at the same time, the lowest numbered DTC will be displayed first.

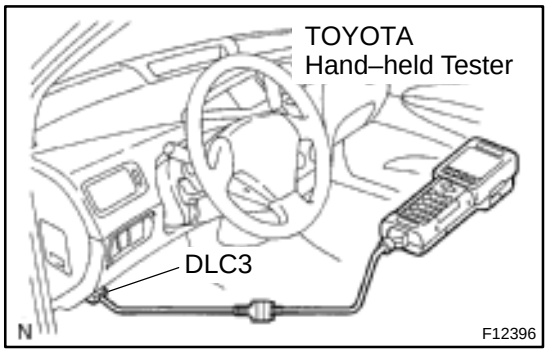

(c) In case of using TOYOTA hand–held tester:
Check the DTC.
(1) Hook up the TOYOTA hand–held tester to the DLC3.
(2) Turn the ignition switch ON.
(3) Read the DTC by following the prompts on the tester screen.

HINT:
Please refer to the TOYOTA hand–held tester operator's manual for further details.

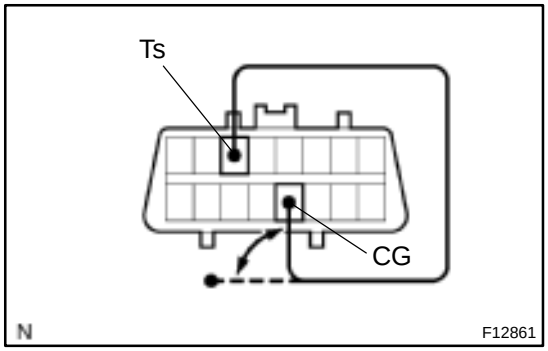

(d) In case of not using TOYOTA hand–held tester:
Clear the DTC.
(1) Using SST, connect terminals Ts and CG of DLC3.
SST 09843–18040
(2) Turn the ignition switch ON.
(3) ON and OFF the terminal CG of the DLC3 4 times or more within 8 seconds, delete DTC of the EMPS ECU.
(4) Check that the PS warning light shows the normal code.
(5) Remove the SST from the DLC3.
SST 09843–18040

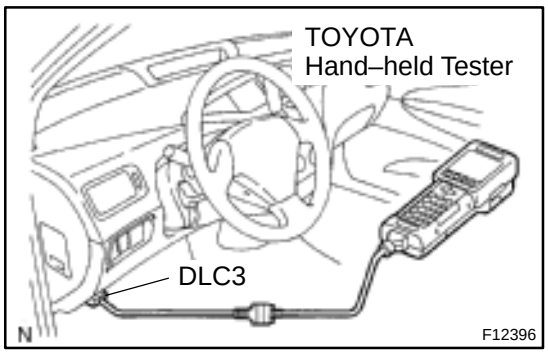

(e) In case of using TOYOTA hand–held tester:
Clear the DTC.
(1) Hook up the TOYOTA hand–held tester to the DLC3.
(2) Turn the ignition switch ON.
(3) Operate the TOYOTA hand–held tester to erase the codes. (See TOYOTA hand–held tester operator's manual.)

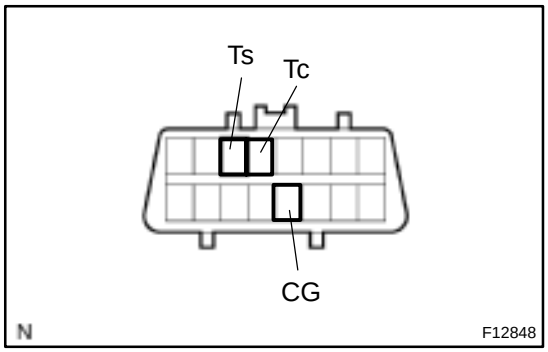

2. INPUT SIGNAL CHECK (TEST MODE)

(a) In case of not using TOYOTA hand–held tester:
Check the input signal.
(1) Turn the ignition switch OFF.
(2) Using SST, connect terminals Ts and CG of DLC3.
SST 09843–18040
(3) Check the warning light goes off with driving more than 20 km/h (12 mph).

HINT:
If the warning light goes off during driving, the sensor can be judged to normal.
(4) Stop the vehicle.
(5) Using SST, connect terminals Tc and CG of DLC3.
SST 09843–18040
(6) Read the number of blinks of the PS warning light.

HINT:
- See the list of DTC shown on the next page.
- Even a sensor is normal, it output codes 71 and 72 during test mode.

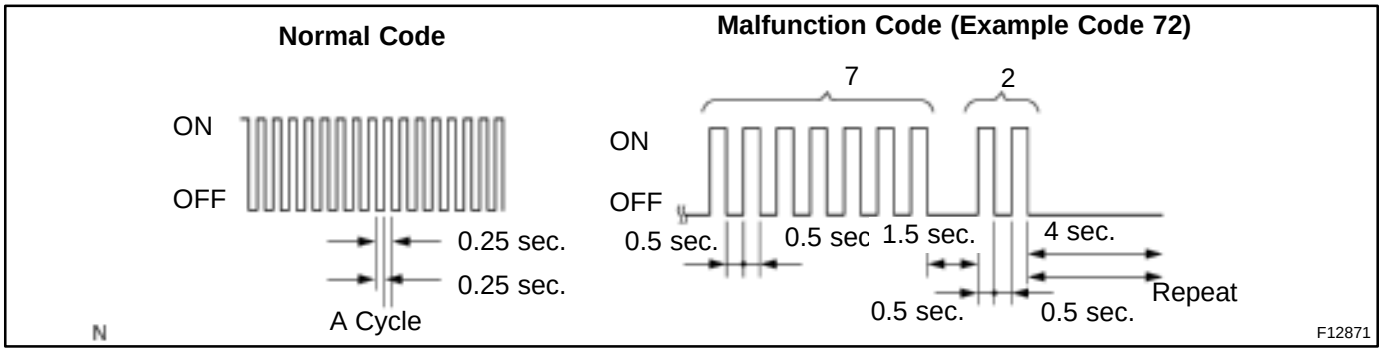

(7) After doing check, disconnect the SST from the terminals Ts and CG, Tc and CG of DLC3, and turn the ignition switch OFF.
SST 09843–18040

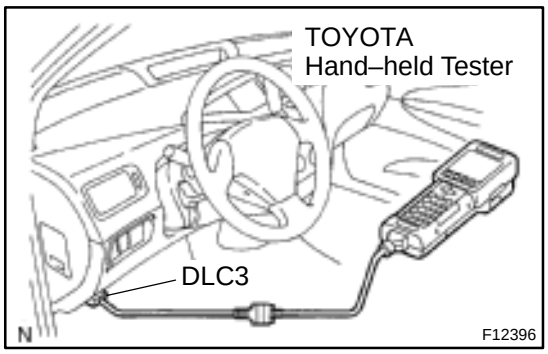

(b) In case of using TOYOTA hand–held tester:
Check the input signal.
(1) Hook up the TOYOTA hand–held tester to the DLC3.
(2) Check the warning light goes off with driving more than 20 km/h (12 mph).
(3) Read the DTC by following the prompts on the tester screen.

HINT:
- Please refer to the TOYOTA hand–held tester operator's manual for further details.
- See the list of DTC shown on the bottom of this page.
- Even a sensor is normal, it output codes 71 and 72 during test mode.

DTC of input signal check function:

Code No. (See page)	Diagnosis	Trouble Area
C1515/15 (DI–468)	Calibration of torque sensor zero point Not Performed	–
C1516/16 (DI–469)	Calibration of torque sensor zero point Not completed	–
C1571/71 C1572/72 (DI–474)	Speed sensor malfunction (Test mode)	• Right rear or left rear speed sensor • Sensor installation • Right rear or left rear speed sensor rotor • Right rear or left rear speed sensor circuit • Brake ECU • EMPS ECU

3. CALIBRATION OF TORQUE SENSOR ZERO POINT

HINT:
Perform this operation in the following cases.
- When removing and installing "steering wheel", "tilt steering column"and "electric power steering gear".
- When replacing EMPS ECU.

(a) Place front wheels and steering wheel facing straight ahead.
(b) In case of using TOYOTA hand–held tester:
Perform the torque sensor zero point initialization.

HINT:
If the EMPS ECU is replaced, however, this operation is not necessary.
(1) Stop the vehicle.

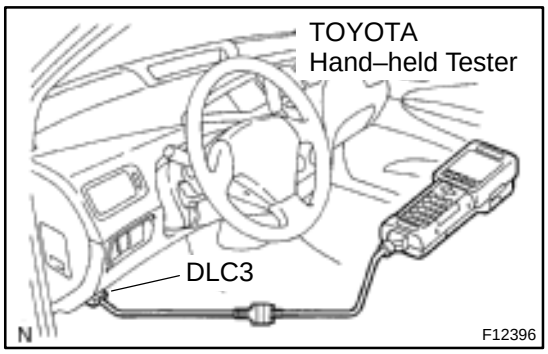

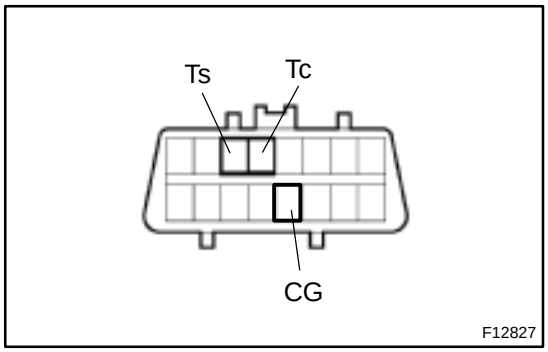

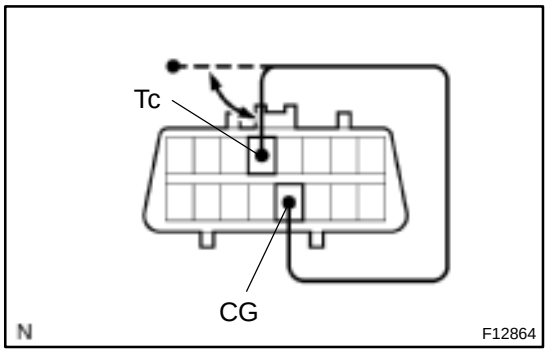

(2) Hook up the TOYOTA hand–held tester to the DLC3.
(3) Select the ”TRQ SENS ADJUST” mode on the TOYOTA hand–held tester.
(4) Select the ”ZERO POINT INITIALIZE”.
(5) Following the screen instructions, perform the torque sensor zero point initialization.

HINT:
Please refer to the TOYOTA hand–held tester operator’s manual for further details.

(c) In case of not using TOYOTA hand–held tester:
Perform the torque sensor zero point initialization.

HINT:
If the EMPS ECU is replaced, however, this operation is not necessary.

(1) Stop the vehicle.
(2) Using SST, connect terminals Ts and CG of DLC3.
SST 09843–18040
(3) Using SST, connect terminals Tc and CG of DLC3.
SST 09843–18040
(4) ON and OFF the terminal Tc of DLC3 20 times within 20 sedonds.
(5) Check that the DTC C1515/15.

(d) In case of using TOYOTA hand–held tester:
Perform the torque sensor zero point calibration.

HINT:
Don’t touch the steering wheel.

(1) Select the ”TRQ SENS ADJUST” mode on the TOYOTA hand–held tester.
(2) Select the ”ZERO POINT ADJUST”.
(3) Following the screen instructions, perform the torque sensor zero point calibration.

HINT:
Please refer to the TOYOTA hand–held tester operator’s manual for further details.

(e) In case of not using TOYOTA hand–held tester:
Perform the torque sensor zero point calibration.

HINT:
- Don’t touch the steering wheel.
- Check the DTC except C1515/15 is not output.

(1) Stop the vehicle and turn the ignition switch OFF.

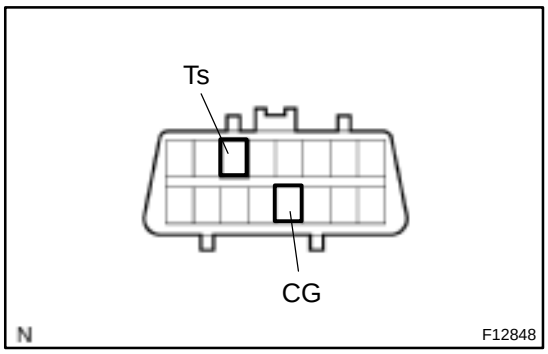

(2) Using SST, connect terminals Ts and CG of DLC3 and ignition switch ON.

SST 09843–18040

(3) Disconnect the SST.

SST 09843–18040

DI7QX–01

DIAGNOSTIC TROUBLE CODE CHART

HINT:

- Using SST 09843–18040, connect terminals Tc and CG of the DLC3.
- If a malfunction code is displayed during the DTC check, check the circuit listed for the code. For details of each code, turn to the page referred to under the ”See page” for respective ”DTC No.” in the DTC chart.

DTC No. (See page)	Detection Item	Trouble Area
C1511/11 (DI–465)	Torque sensor circuit malfunction	• Torque sensor • EMPS ECU
C1512/12 (DI–465)		
C1513/13 (DI–465)		
C1514/14 (DI–465)		
C1521/21 (DI–471)	Motor circuit malfunction	• Power steering gear assembly with motor • EMPS ECU
C1522/22 (DI–471)		
C1523/23 (DI–471)		
C1524/24 (DI–471)		
C1531/31 (DI–473)	EMPS ECU malfunction	EMPS ECU
C1532/32 (DI–473)		
C1533/33 (DI–473)		
C1541/41 (DI–474)	Speed sensor malfunction	• Speed sensor • Brake ECU • EMPS ECU
C1542/42 (DI–474)		
C1543/43 (DI–474)		
C1551/51 (DI–476)	IG power source circuit malfunction	• EMPS ECU • Power source circuit • Charging system
C1552/52 (DI–479)	PIG power source drop voltage malfunction	• EMPS ECU • Power source circuit
C1553/53 (DI–482)	When resetting voltage, vehicle is being driven	EMPS ECU
C1554/54 (DI–483)	EMPS relay circuit malfunction	• EMPS relay • EMPS ECU • EMPS relay circuit
C1555/55 (DI–473)	EMPS ECU malfunction	EMPS ECU
C1556/56 (DI–486)	P/S warning light circuit	• Multiinformation display • EMPS ECU

C1557/57 (DI–488)	Memory of overheat prevention control	–
C1558/58 (DI–488)	Memory of voltage drop at motor power supply	–
C1559/59 (DI–488)	Memory of continuous control under high load	–
Always ON (DI–489)	Malfunction in EMPS ECU	• Power source circuit • EMPS ECU • PS warning light circuit

DI7R1–01

CIRCUIT INSPECTION

DTC	C1511/11–C1514/14	Torque Sensor Circuit Malfunction

CIRCUIT DESCRIPTION

Steering torque is detected from output current of torque sensor.

DTC No.	Detection Item	Trouble Area
C1511/11	Torque sensor malfunction	• Power steering gear assembly with motor • EMPS ECU
C1512/12		
C1513/13		
C1514/14	Open or short torque sensor circuit	

WIRING DIAGRAM

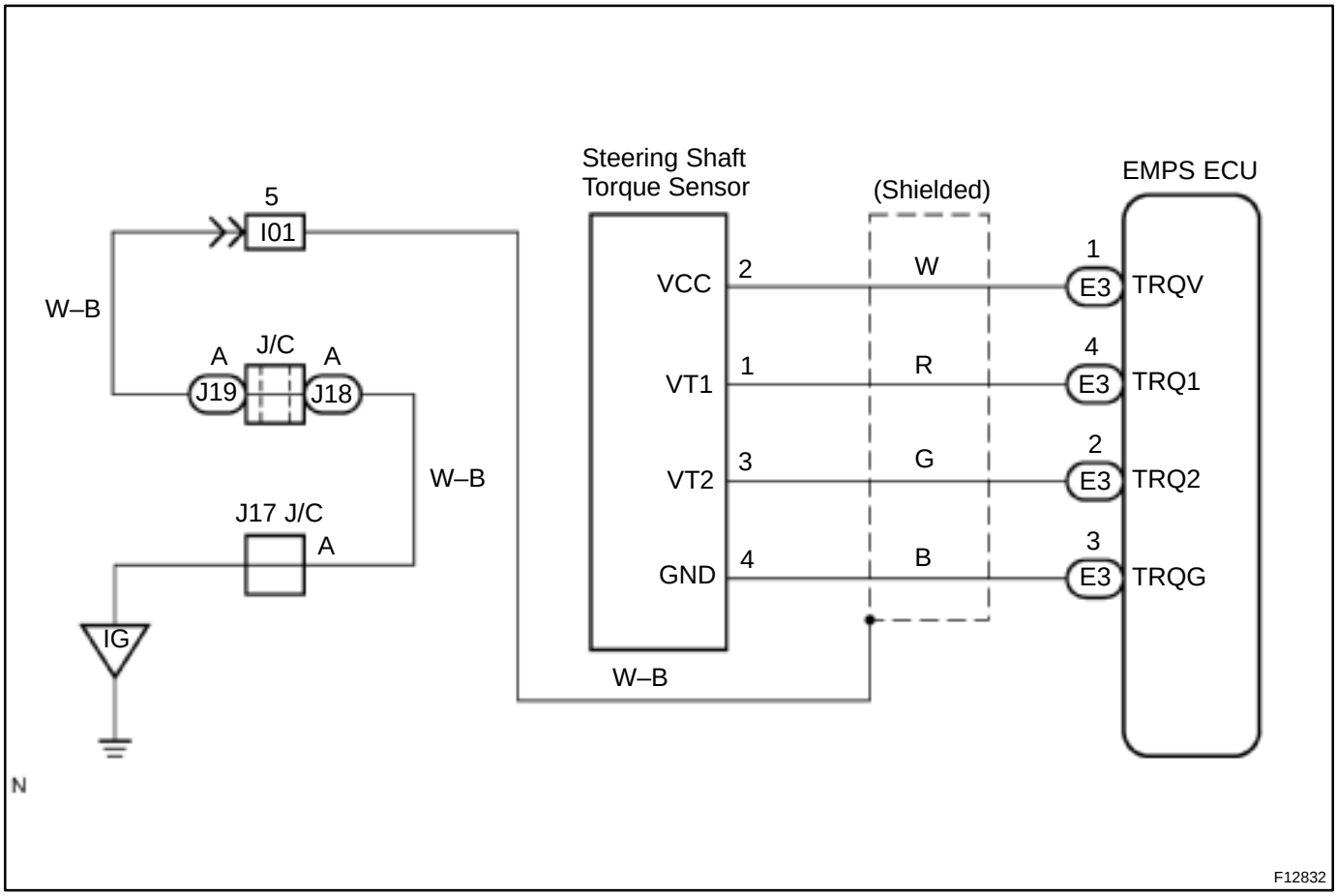

INSPECTION PROCEDURE

1	**Check voltage between terminals TRQV and TRQG of EMPS ECU.**

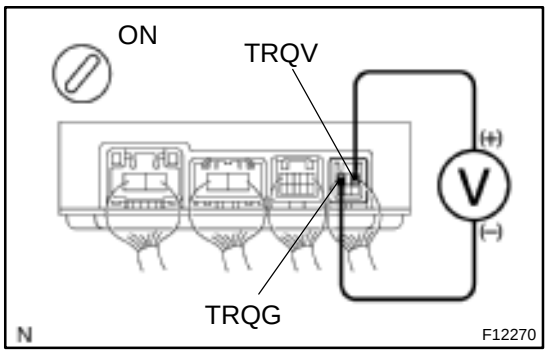

PREPARATION:
Remove the EMPS ECU with connectors still connected.
CHECK:
Measure the voltage between terminals TRQV and TRQG of EMPS ECU connector.
OK:
Voltage: 4.5 – 5.5 V

NG → **Check and replace the EMPS ECU.**

OK

2	**Check for open and short circuit in harness and connector between terminals TRQV and TRQG of EMPS ECU connector (See page IN–41).**

NG → **Repair and replace harness or connector.**

OK

3	**Check voltage between terminals VT_1 and GND, VT_2 and GND of torque sensor connector.**

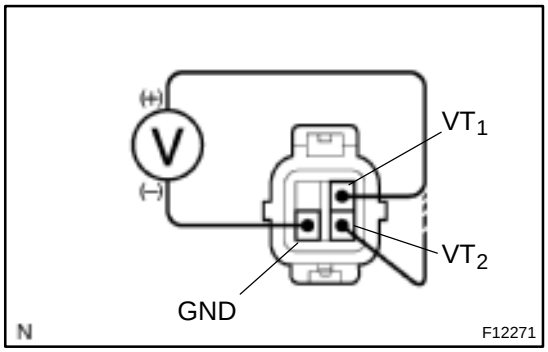

PREPARATION:
Remove the torque sensor with connectors still connected.
CHECK:
Measure the voltage between terminals VT_1 and GND, VT_2 and GND of torque sensor connector.
OK:

Steering Position	VT_1	VT_2
Center position	2.1 – 2.9 V	2.1 – 2.9 V
Right turned	0.15 – 2.9 V	2.1 – 4.85 V
Left turned	2.1 – 4.85 V	0.15 – 2.9 V

NG → Check and replace power steering gear assembly with motor (See page SR–17).

OK

4	Check for open and short circuit in harness and connector between terminals VT_1 of torque sensor connector and TRQ_1 of EMPS ECU connector, VT_2 of torque sensor connector and TRQ_2 of EMPS ECU connector (See page IN–41).

NG → Repair and replace harness or connector.

OK

Check and replace EMPS ECU.

DI7R3–01

DTC	C1516/16	Calibration of Torque Sensor Zero Point Not Completed

CIRCUIT DESCRIPTION

This DTC does not indicated trouble. This is detected when the torque sensor zero point calibration is not completed normally.

DTC No.	DTC Detecting Condition	Trouble Area
C1516/16	This is detected when the torque sensor zero point calibration is not completed normally.	–

INSPECTION PROCEDURE

1	**Perform calibration of torque sensor zero point (See page DI–454).**

2	**Is DTC C1516/16 output?**

Check DTC on page DI–460.

NO → **No problem.**

YES

3	**Is DTC C1532/32 output?**

YES → **Check and replace EMPS ECU.**

NO

4	**Perform calibration of torque sensor zero point again (See page DI–454).**

5	**Is DTC C1516/16 output after attempted 3 times or more?**

YES → **Replace the power steering gear assembly with motor.**

NO

No problem.

DI7R4–01

DTC	C1521/21–C1524/24	Motor Circuit Malfunction

CIRCUIT DESCRIPTION

DTC No.	Detection Item	Trouble Area
C1521/21	Short circuit of motor terminal or abnormal voltage or current in motor circuit.	• Power steering gear assembly with motor • EMPS ECU
C1522/22		
C1523/23		
C1524/24		

WIRING DIAGRAM

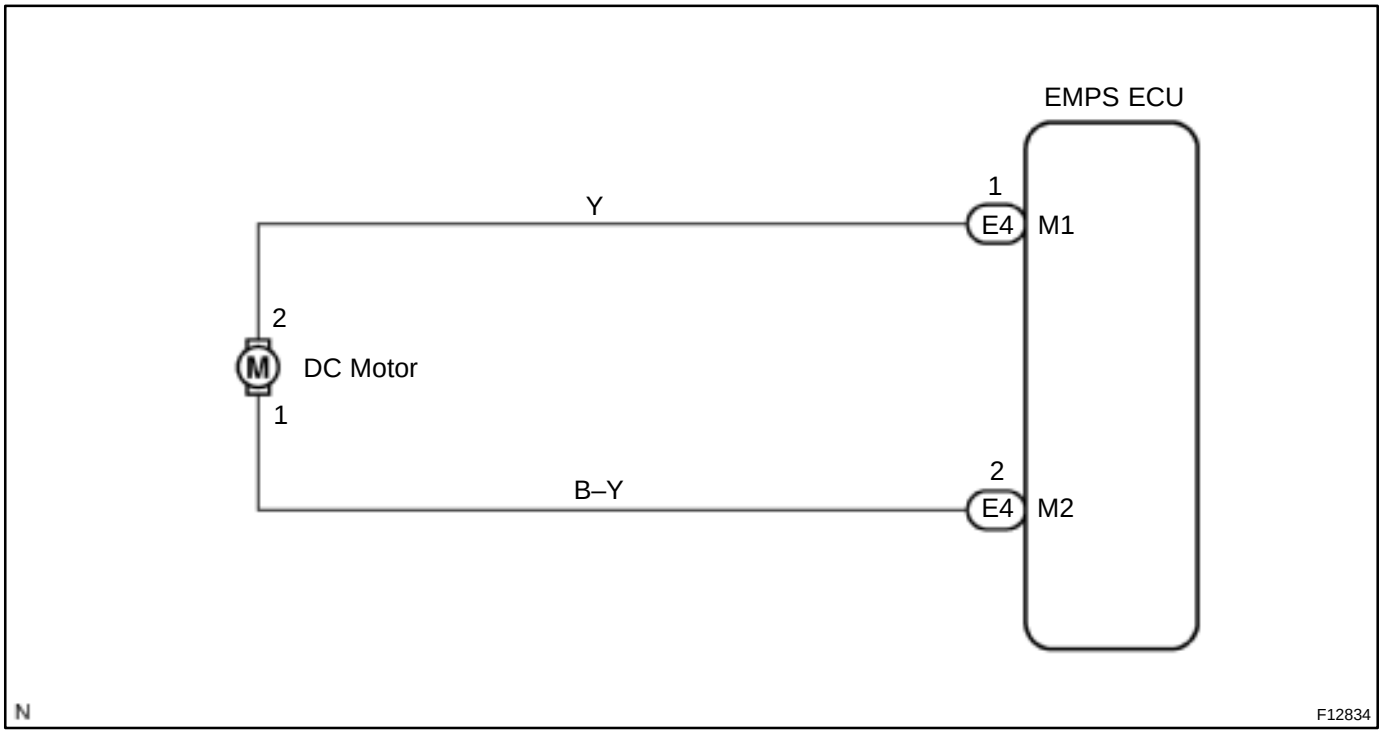

INSPECTION PROCEDURE

1	Check voltage between terminals M_1 and M_2 of EMPS ECU connector.

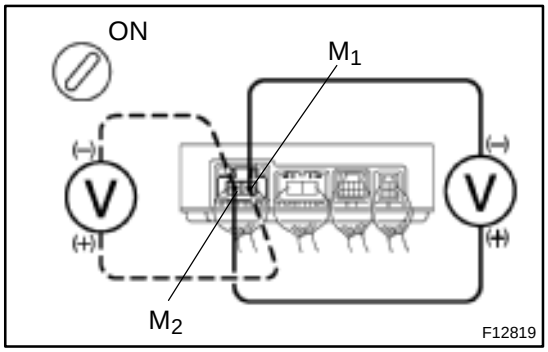

PREPARATION:

- Remove the EMPS ECU with connectors still connected.
- Turn the ignition switch ON.

CHECK:

Turn the steering wheel to left and right and measure the voltage between terminals M_1 and M_2 of EMPS ECU connector.

OK:

Voltage: 9 – 14 V

NG	Check and replace the EMPS ECU.

OK

2	**Check for open and short circuit in harness and connector between terminals M_1 and M_2 of EMPS ECU connector (See page IN–41).**

NG → **Repair or replace harness or connector.**

OK

3	**Check continuity between terminal M_1 and M_2 of motor connector.**

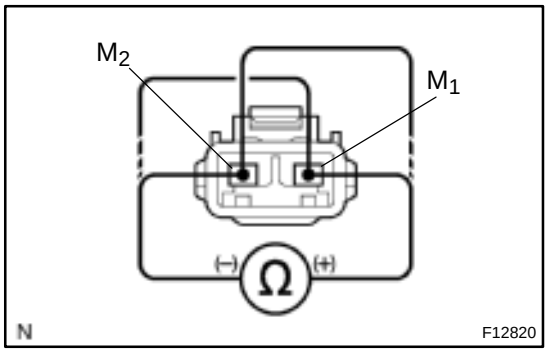

PREPARATION:
Disconnect the connector from the motor.
CHECK:
Measure the resistance between terminals M_1 and M_2 of motor connector.
OK:
Resistance: 0.1 – 1 Ω

NG → **Check and replace the power steering gear assembly with motor (See page SR–17).**

OK

Check and replace the EMPS ECU.

DI7R6–01

DTC	C1541/41–C1543/43	Speed Sensor Malfunction

DTC	C1571/71, C1572/72	Speed Sensor Malfunction (Test Mode)

CIRCUIT DESCRIPTION

DTC No.	DTC Detecting Condition	Trouble Area
C1541/41	Speed sensor malfunction	• Speed sensor • Brake ECU • EMPS ECU
C1542/42		
C1543/43		
C1571/71 C1572/72	Speed sensor malfunction (Test mode)	• Right rear or left rear speed sensor • Sensor installation • Right rear or left rear speed sensor rotor • Right rear or left rear speed sensor circuit • Brake ECU • EMPS ECU

WIRING DIAGRAM

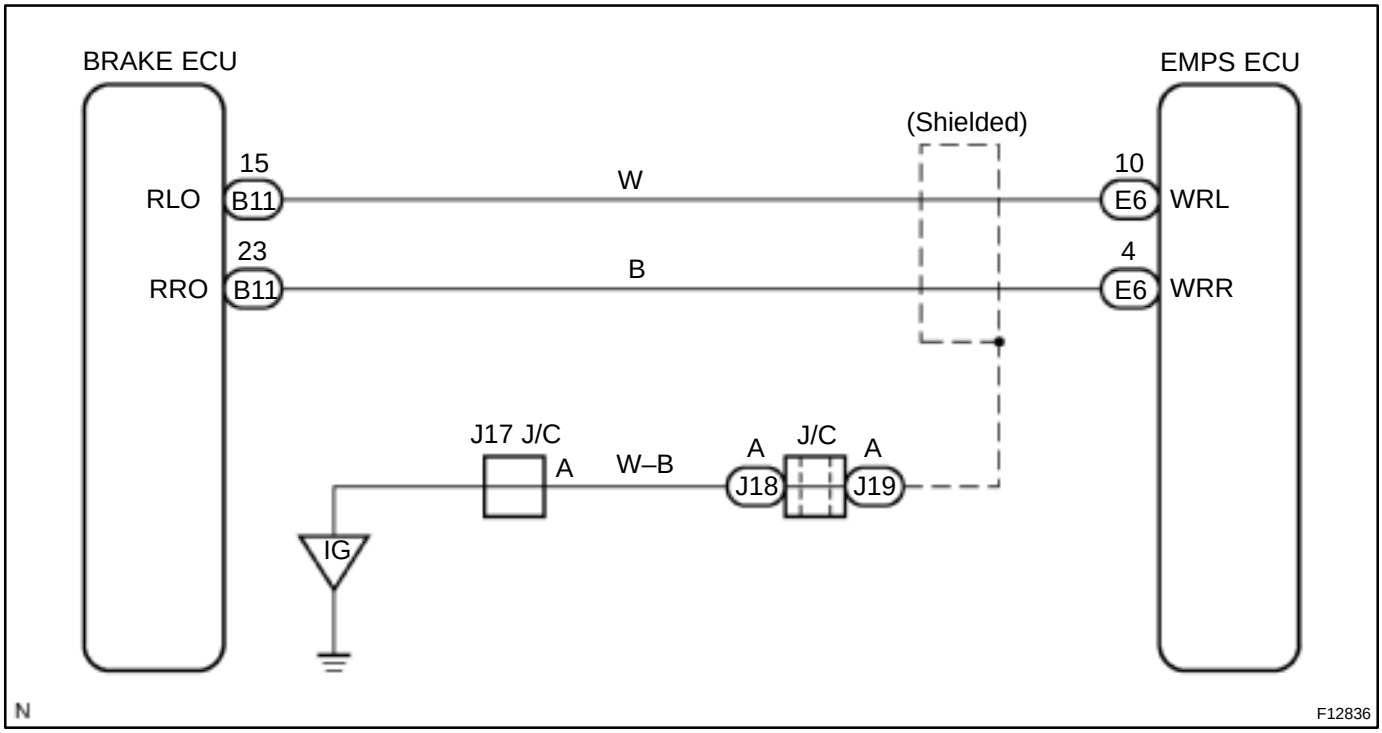

INSPECTION PROCEDURE

1	**Check continuity between terminals WRR and PGND, WRL and PGND of EMPS ECU connector.**

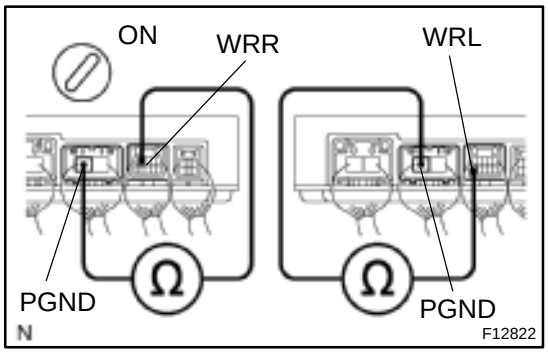

PREPARATION:
Remove the EMPS ECU with connectors still connected.
CHECK:
Turn the ignition switch ON and measure the resistance between terminals WRR and PGND, WRL and PGND of EMPS ECU connector.
OK:
Resistance:1M Ω or higher

NG → **Check and replace the EMPS ECU.**

OK

2	**Check for open and short circuit in harness and connector between terminals WRR of EMPS ECU connector and RRO of brake ECU connector, WRL of EMPS ECU and RLO of brake ECU connector (See page IN–41).**

NG → **Repair and replace harness or connector.**

OK

3	**Check the DTC for the ABS with EBD and RBS (See page DI–351).**

***1** → **Repair ABS with EBD and RBS control system according to the code output.**

*1: Output NG code

DI7R7–01

DTC	C1551/51	IG Power Source Circuit Malfunction

CIRCUIT DESCRIPTION

The EMPS ECU identifies ON or OFF status of ignition switch by this circuit.

DTC No.	DTC Detecting Condition	Trouble Area
C1551/51	The abnormal IG voltage value which is not within the specification is input to EMPS ECU.	• EMPS ECU • Power source circuit • Charging system

WIRING DIAGRAM

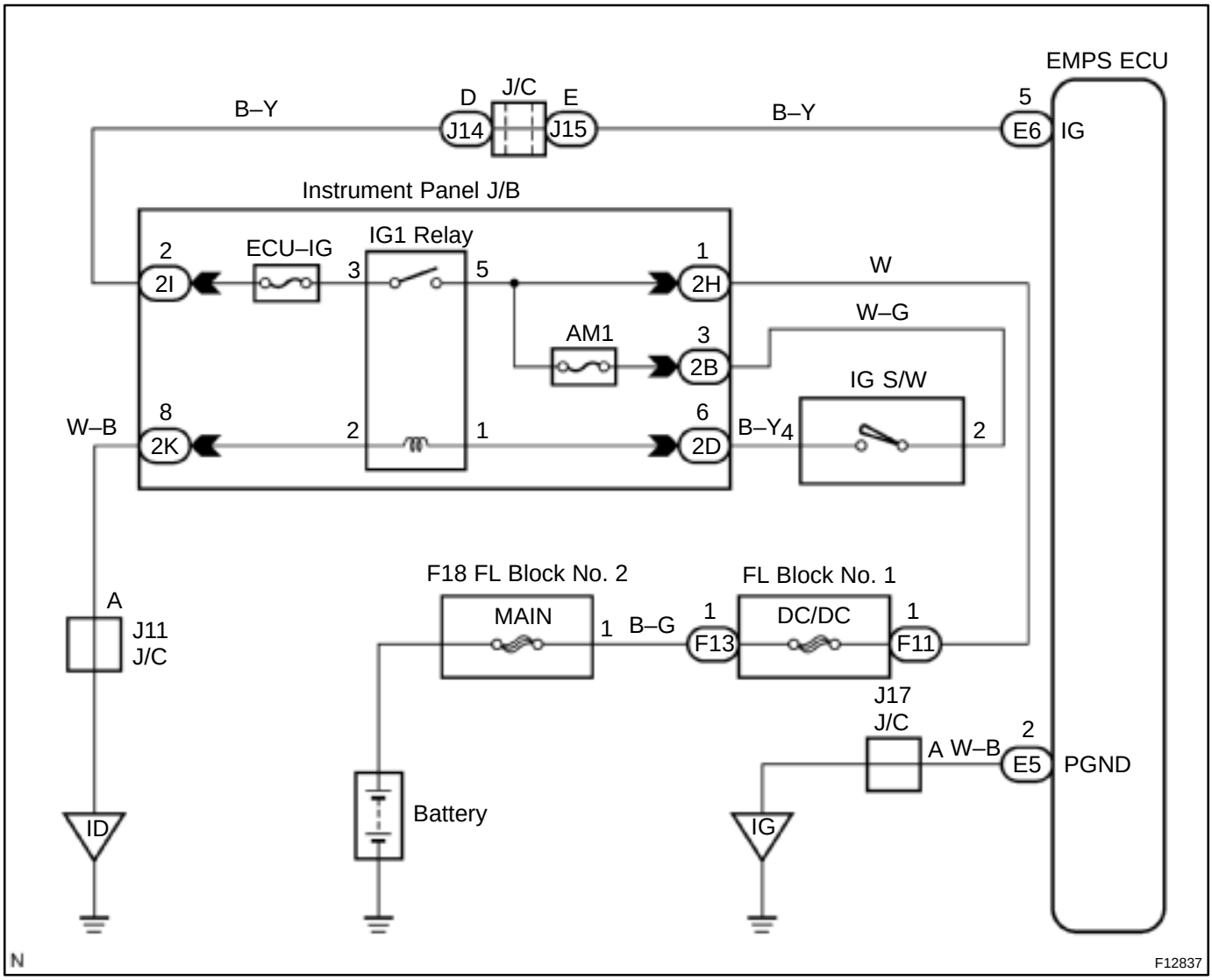

INSPECTION PROCEDURE

1	**Check ECU–IG fuse.**

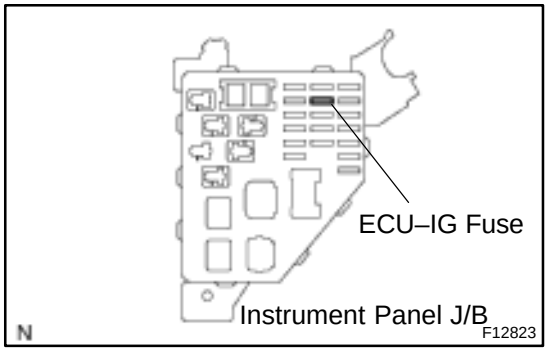

PREPARATION:
Remove the ECU–IG fuse from the instrument panel J/B.
CHECK:
Check the continuity of the ECU–IG.
OK:
Continuity

NG → **Check for short circuit in all harness and components connected to ECU–IG fuse (See attached wiring diagram).**

OK

2	**Check that the battery positive voltage when IG switch is OFF.**

OK:
Voltage: 9 – 14 V

NG → **Charge or replace the battery.**

OK

3	Check voltage between terminals IG and PGND of EMPS ECU connector.

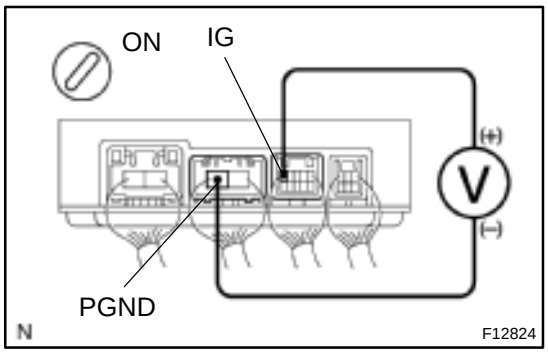

PREPARATION:
Remove the EMPS ECU with connectors still connected.
CHECK:
Turn the ignition switch ON and measure the voltage between terminals IG and PGND of EMPS ECU connector.
OK:
Voltage: 9 – 14 V

OK	Check and replace the EMPS ECU.

NG

4	Check continuity between terminals PGND of EMPS ECU connector and body ground.

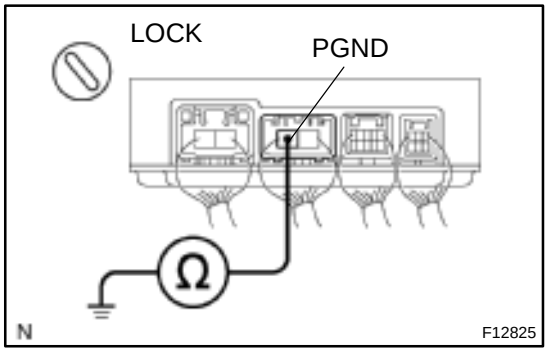

CHECK:
Measure the resistance between terminals PGND of EMPS ECU connector and body ground.
OK:
Resistance: 1 Ω or less

NG	Repair or replace harness or connector.

OK

Check for open and short circuit in harness and connector between EMPS ECU and ECU–IG fuse (See page IN–41).

DI7R8–01

DTC	C1552/52	PIG Power Source Circuit

CIRCUIT DESCRIPTION

When turning ignition switch ON, battery voltage is supplied to terminal PIG of EMPS ECU by EMPS relay operation.

DTC No.	DTC Detecting Condition	Trouble Area
C1552/52	The abnormal motor power source voltage value which is not within the specification is input to EMPS ECU.	• EMPS ECU • Power source circuit

WIRING DIAGRAM

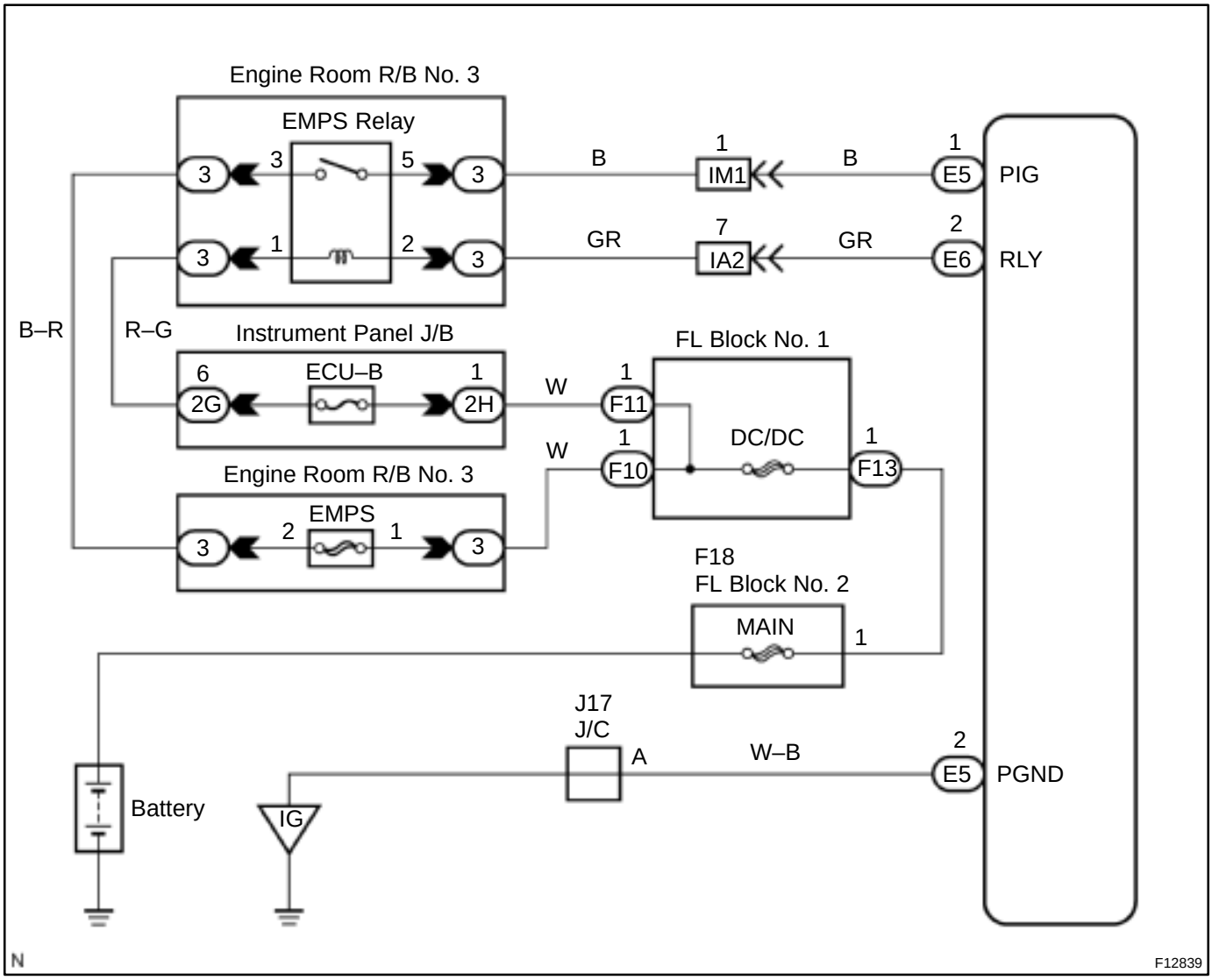

INSPECTION PROCEDURE

1	**Check voltage between terminals PIG and PGND of EMPS ECU connector.**

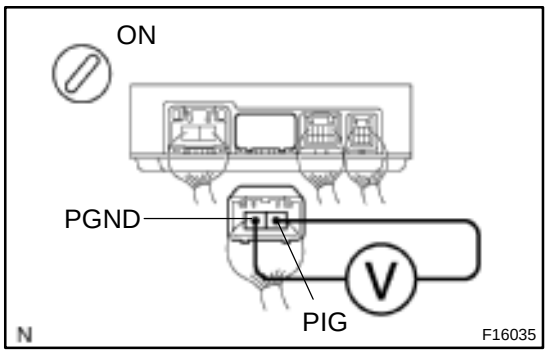

PREPARATION:
5/18/01Disconnect the connector from the EMPS ECU.
CHECK:
5/18/01Turn the ignition switch ON and measure the voltage between terminals PIG and PGND of EMPS ECU connector.
OK:

Voltage: 9 – 14 V

OK	**Check and replace EMPS ECU.**

NG

2	**Check continuity between terminals PGND of EMPS ECU connector and body ground.**

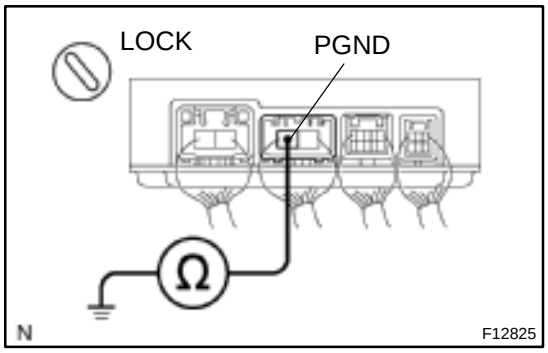

PREPARATION:
5/18/01Connect the connector back to the EMPS ECU.
CHECK:
5/18/01Measure the resistance between terminals PGND of EMPS ECU connector and body ground.
OK:

Resistance: 1 Ω or less

NG	**Repair or replace harness or connector.**

OK

3	Check EMPS fuse.

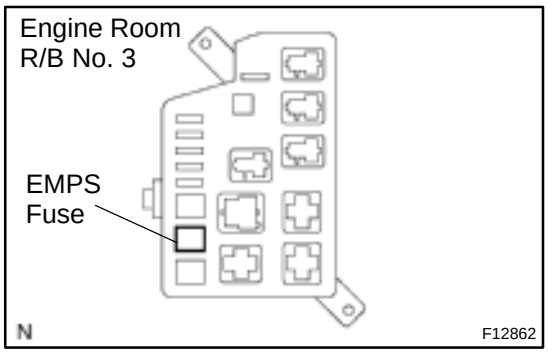

PREPARATION:

5/18/01Remove the EMPS fuse from engine room R/B No. 3.

CHECK:

5/18/01Check continuity of EMPS fuse.

OK:

Continuity

NG → **Check for short circuit in harness and all components connected to EMPS fuse (See attached wiring diagram).**

OK

Check for open and short circuit in harness and connector between EMPS ECU and battery (See page IN–41).

DI7RA–01

DTC	C1554/54	EMPS Relay Circuit

CIRCUIT DESCRIPTION

DTC No.	DTC Detecting Condition	Trouble Area
C1554/54	Open or short circuit is detected.	• EMPS ECU • EMPS relay • EMPS relay circuit

WIRING DIAGRAM

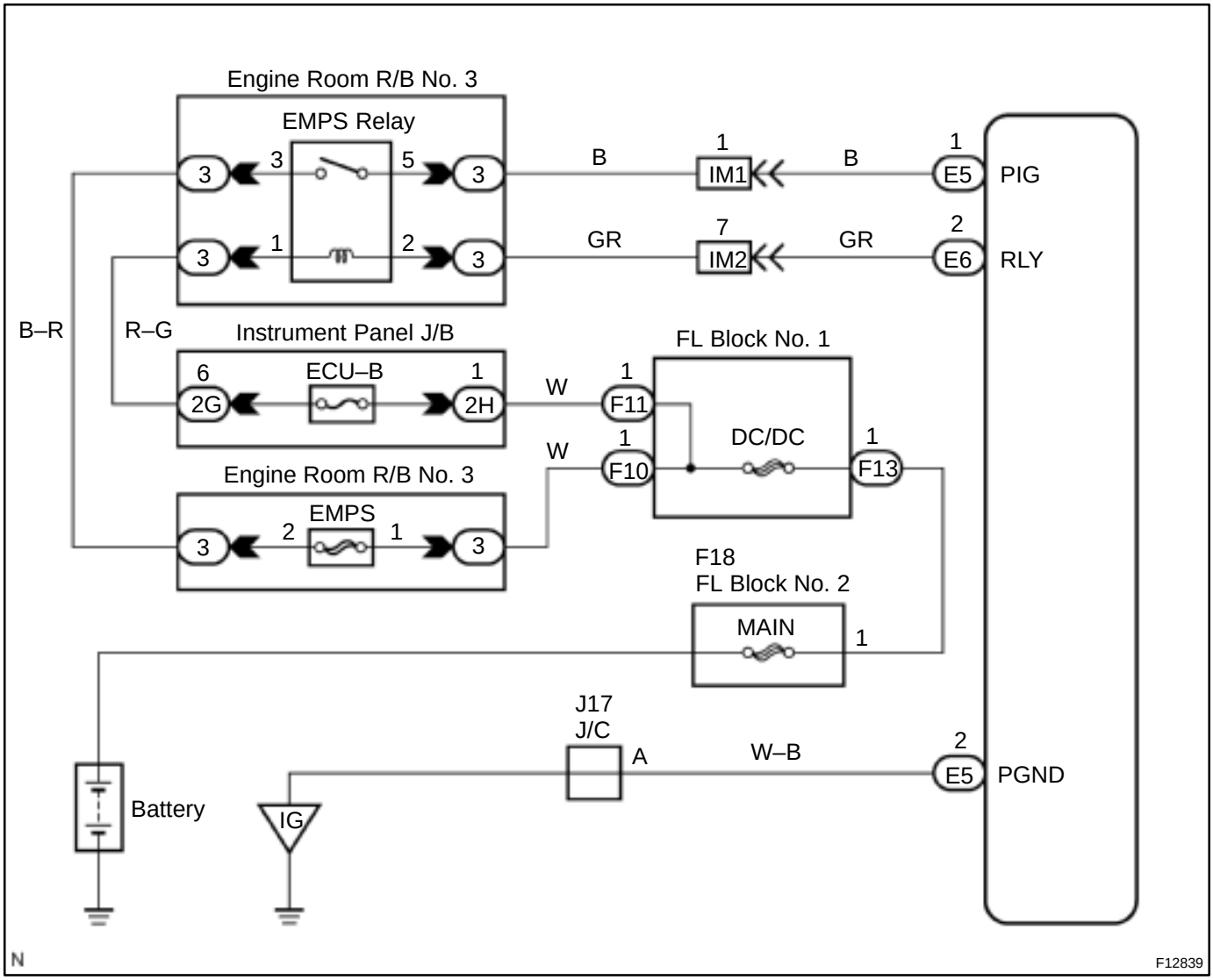

INSPECTION PROCEDURE

1	Check voltage between terminals RLY and PGND of EMPS ECU connector.

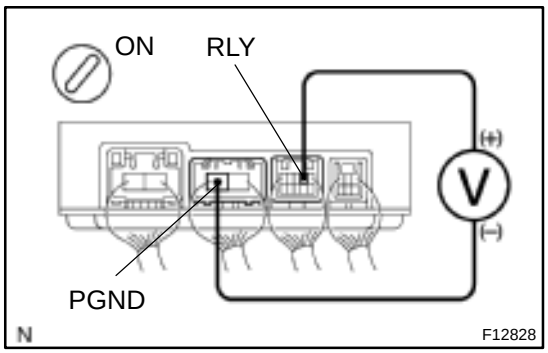

PREPARATION:
Remove the EMPS ECU with connectors still connected.
CHECK:
Turn the ignition switch ON and measure the voltage between terminals RLY and PGND of EMPS ECU connector.
OK:

Voltage: 9 – 14 V

OK	Check or replace EMPS ECU.

NG

2	Check EMPS relay.

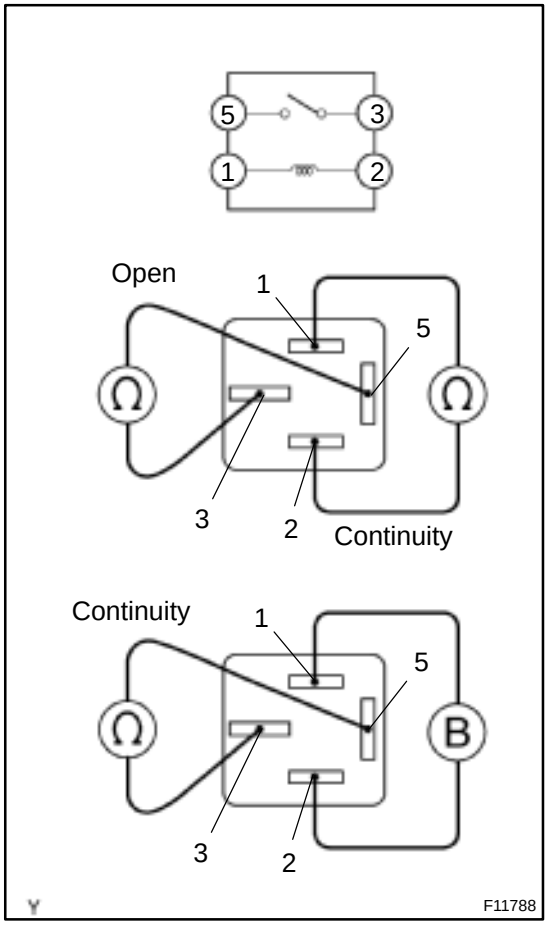

PREPARATION:
Remove the EMPS relay from the engine room R/B No. 3.
CHECK:
Check the continuity between each terminal of the EMPS relay.
OK:

Terminals 1 and 2	Continuity (Reference value 80 Ω)
Terminals 3 and 5	Open

CHECK:
(a) Apply battery positive voltage between terminals 1 and 2.
(b) Check the continuity between the terminals.
OK:

Terminals 3 and 5	Continuity

NG → **Replace EMPS relay.**

OK

3	**Check ECU–B fuse.**

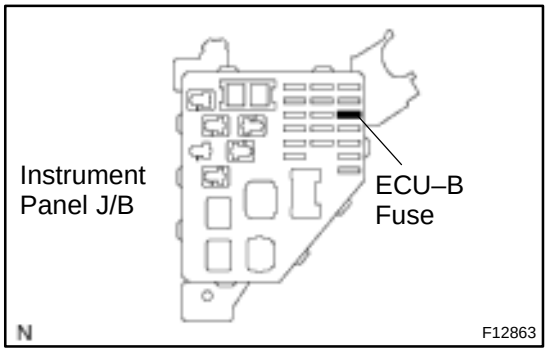

PREPARATION:

Remove the ECU–B fuse from instrument panel J/B.

CHECK:

Check the continuity of ECU–B fuse.

OK:

Continuity

NG → **Check for short in harness and all components connected to ECU–B fuse (See attached wiring diagram).**

OK

Check for open and short circuit in harness and connector between EMPS ECU and battery (See page IN–41).

DI7RB–01

DTC	C1556/56	P/S Warning Light Circuit

CIRCUIT DESCRIPTION

DTC No.	DTC Detecting Condition	Trouble Area
C1556/56	There is a malfunction in PS warning light circuit.	• Multiinformation display • EMPS ECU

WIRING DIAGRAM

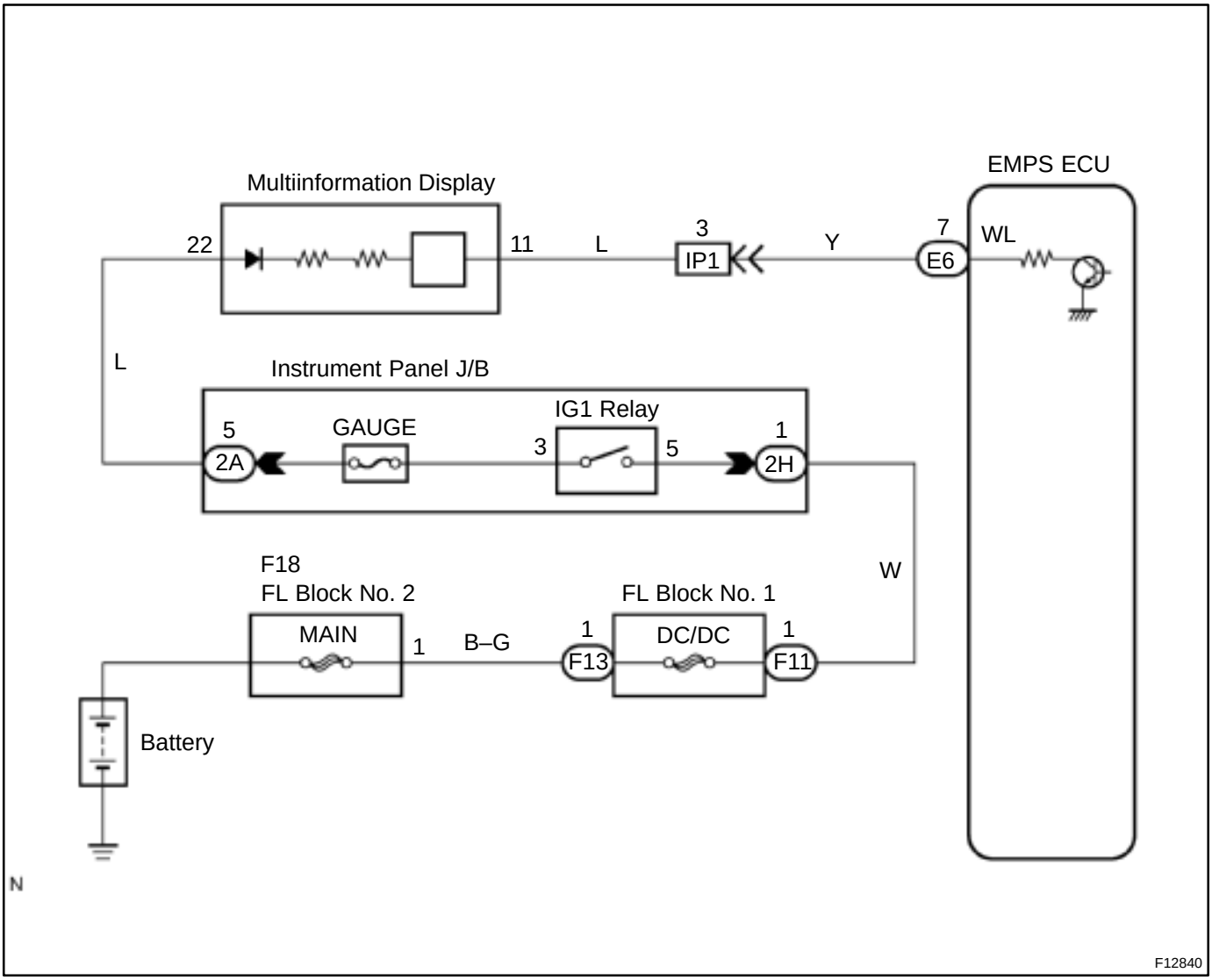

INSPECTION PROCEDURE

1	**Check voltage between terminals WL of EMPS ECU connector and body ground.**

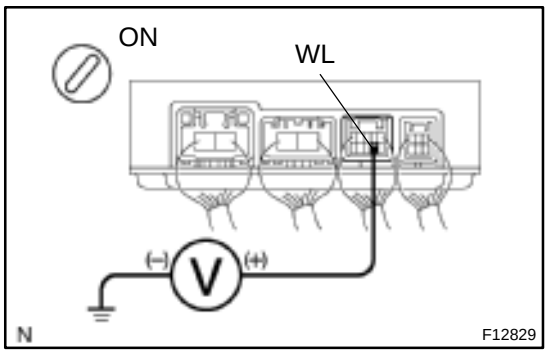

PREPARATION:
Remove the EMPS ECU with connectors still connected.
CHECK:
Turn the ignition switch ON and measure the voltage between terminals WL of EMPS ECU connector and body ground.
OK:

Voltage: 9 – 14 V

NG → **Check and replace EMPS ECU.**

OK

2	**Check for open and short circuit in harness and connector between EMPS ECU and multiinformation display (See page IN–41).**

NG → **Repair or replace harness or connector.**

OK

Check multiinformation display circuit (See page BE–97).

DI7RD–01

DTC	Always ON	Malfunction in EMPS ECU

CIRCUIT DESCRIPTION

DTC No.	DTC Detecting Condition	Trouble Area
Always ON	There is a malfunction in the EMPS ECU internal circuit.	• Power source circuit • EMPS ECU • PS warning light circuit

INSPECTION PROCEDURE

1	Is DTC output?

Check DTC on page DI–460.

YES → **Repair circuit indicated by output code.**

NO

2	Is normal code displayed?

YES → **Check and replace EMPS ECU.**

NO

3	Does PS warning light goes off?

YES → **Check for open or short circuit in harness and connector between ECU–IG fuse and EMPS ECU (See page IN–41).**

NO

4	Check battery positive voltage.

PREPARATION:
Start the engine.
CHECK:
Check the battery positive voltage.
OK:
Voltage: 9 – 14 V

NG → **Check and repair charging system.**

OK ↓

5	Check operation of PS warning light.

PREPARATION:
(a) Turn the ignition switch OFF.
(b) Disconnect the connector from the EMPS ECU.
(c) Turn the ignition switch ON.
CHECK:
Check the PS warning light goes OFF.

OK → **Check and replace EMPS ECU.**

NG ↓

Check for short circuit in harness and connector between multiinformation display and EMPS ECU, multiinformation display and DLC3 (See page IN–41).

DI7RE–01

Tc Terminal Circuit

CIRCUIT DESCRIPTION

Connecting terminals Tc and CG of the DLC3 causes the EMPS ECU to display the DTC by flashing the PS warning light.

WIRING DIAGRAM

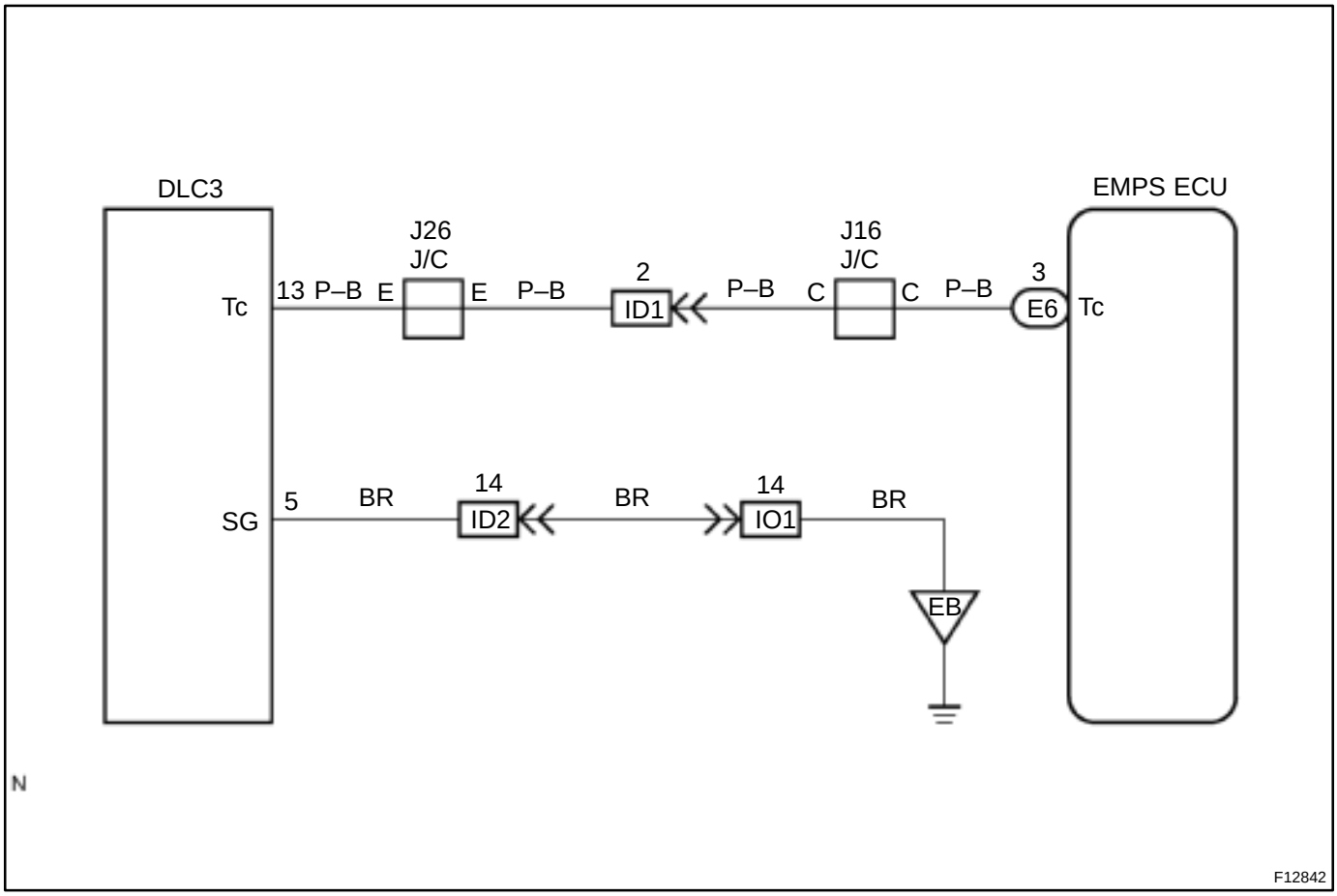

INSPECTION PROCEDURE

1	**Check voltage between terminals Tc and CG of DLC3.**

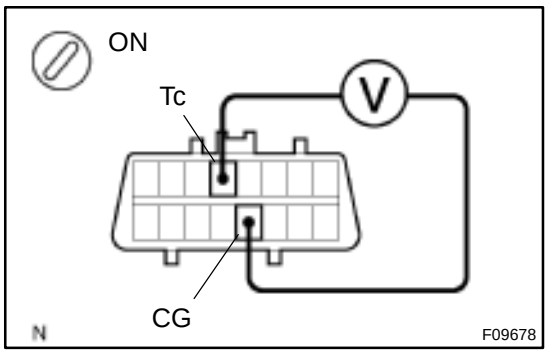

CHECK:
Turn the ignition switch ON and measure the voltage between terminals Tc and CG of the DLC3.
OK:
Voltage: 9 – 14 V

OK → **If PS warning light does not blink even after Tc and CG are connected, EMPS ECU may be defective.**

NG

2	**Turn the ignition switch OFF, and check for open and short circuit in harness and connector between EMPS ECU and DLC3, and DLC3 and body ground (See page IN–41).**

NG → **Repair or replace harness or connector.**

OK

Check and replace EMPS ECU.

DI7RF–01

Ts Terminal Circuit

CIRCUIT DESCRIPTION

The sensor check circuit detects abnormalities in the speed sensor signal which cannot be detected by the DTC check.
Connecting terminals Ts and CG of the DLC3 starts the check.

WIRING DIAGRAM

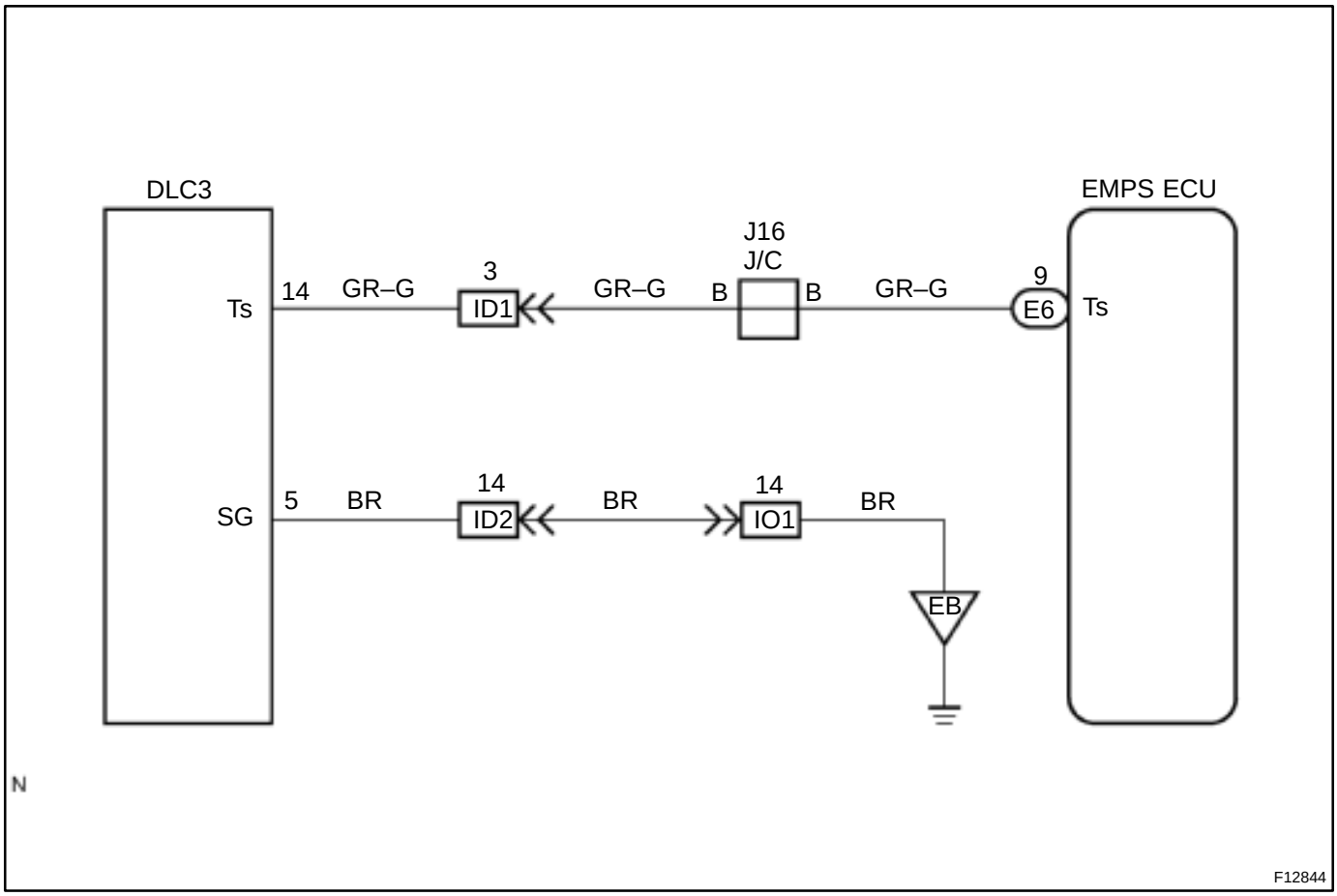

INSPECTION PROCEDURE

1	**Check voltage between terminals Ts and CG of DLC3.**

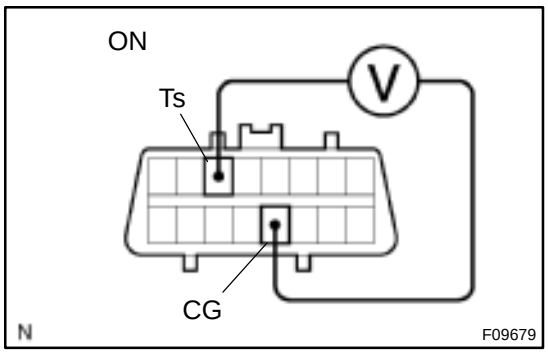

CHECK:

Turn the ignition switch ON and measure the voltage between terminals Ts and CG of the DLC3.

OK:

Voltage: 9 – 14 V

OK → **If PS warning light repeats turning ON and OFF even after Ts and CG are connected, EMPS ECU may be defective.**

NG

2	**Turn the ignition switch OFF, and check for open and short circuit in harness and connector between EMPS ECU and DLC3, DLC3 and body ground (See page IN–41).**

NG → **Repair or replace harness or connector.**

OK

Check and replace EMPS ECU.

DI6OY–07

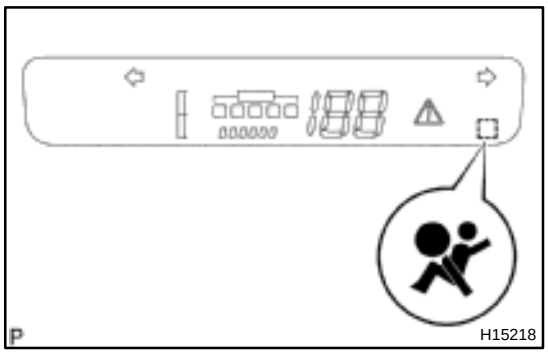

PRE–CHECK

1. SRS WARNING LIGHT CHECK

(a) Turn the ignition switch to the ON position and check that the SRS warning light lights up.

(b) Check that the SRS warning light goes out after approx. 6 seconds.

HINT:

- When the ignition switch is at ON and the SRS warning light remains on or flashes, the airbag sensor assembly has detected a malfunction code.
- If, after approx. 6 seconds have elapsed, the SRS warning light sometimes lights up or the SRS warning light lights up even when the ignition switch is OFF, a short in the SRS warning light circuit can be considered likely. Proceed to ”SRS warning light circuit malfunction” on page DI–632.

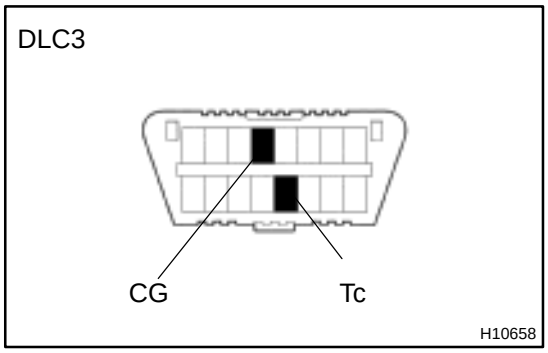

2. DTC CHECK (Using diagnosis check wire)

(a) Present troubles codes:

Output the DTC.

(1) Turn the ignition switch to the ON position and wait for approx. 20 seconds.

(2) Using SST, connect terminals Tc and CG of the DLC3.

SST 09843–18020

NOTICE:

Pay due attention to the terminal connecting position to avoid a malfunction.

(b) Past troubles codes:

Output the DTC.

(1) Using service wire, connect terminals Tc and CG of the DLC3.

SST 09843–18020

(2) Turn the ignition switch to the ON position and wait for approx. 20 seconds.

NOTICE:

Pay due attention to the terminal connecting position to avoid a malfunction.

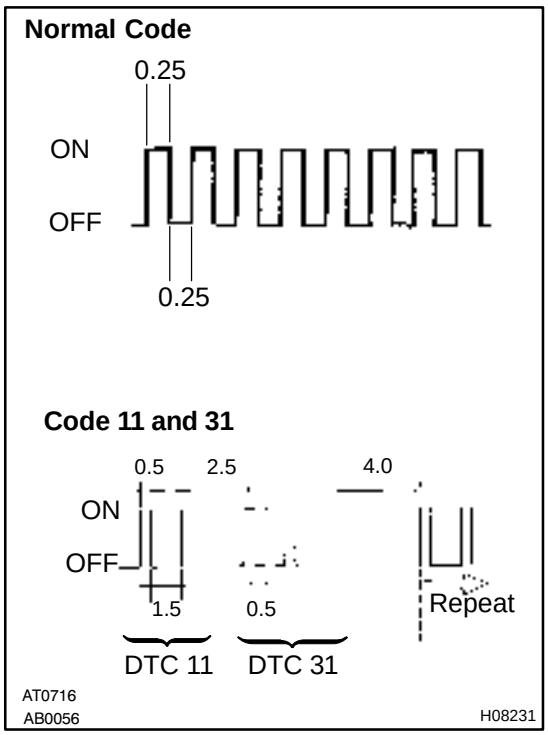

(c) Read the DTC.
Read the 2–digit DTC as indicated by the number of times the SRS warning light blinks. As an example, the blinking patterns, normal, 11 and 31 are shown in the illustration.

- Normal code indication
  The light will blink 2 times per second.
- Malfunction code indication
  The first blinking output indicates the first digit of a 2–digit DTC. After a 1.5–second pause, the second blinking output will indicate the second digit.

If there are 2 or more codes, there will be a 2.5–second pause between each code. After all the codes have been output, there will be a 4.0–second pause and they will all be repeated.
HINT:

- In the event of a number of trouble codes, indication will start from the smallest numbered code.
- If a DTC is not output or a DTC is output without terminal connection, proceed to the Tc terminal circuit inspection on page DI–636.

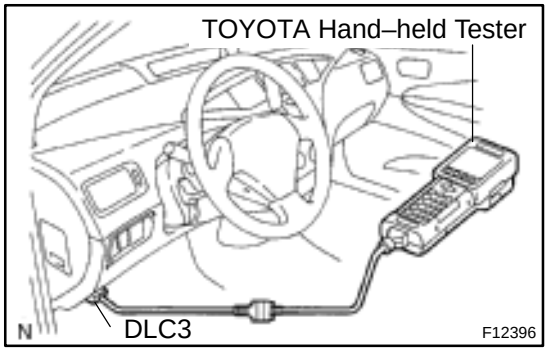

3. DTC CHECK (Using TOYOTA hand–held tester)

(a) Hook up the TOYOTA hand–held tester to the DLC3.
(b) Read the DTCs by following the prompts on the tester screen.

HINT:
Please refer to the TOYOTA hand–held tester operator's manual for further details.

4. DTC CLEARANCE (Not using service wire)

When the ignition switch is turned off, the diagnostic trouble code is cleared.
HINT:
DTC might not be cleared by turning the ignition switch OFF. In this case, proceed to the next step.

5. DTC CLEARANCE (Using service wire)

(a) Connect the 2 service wires to terminals Tc and A/B of DLC3.
(b) Turn the ignition switch to ON and wait for approx. 6 seconds.

(c) Starting with the Tc terminal, ground alternately terminal Tc and terminal A/B twice each in cycles of 1.0 second. Make sure that the terminals are grounded. Ensure the terminal Tc remain grounded.

HINT:

When alternately grounding terminals Tc and A/B, release ground from one terminal and immediately ground the other terminal within an interval of 0.2 seconds.

If DTCs are not cleared, repeat the above procedure until the codes are cleared.

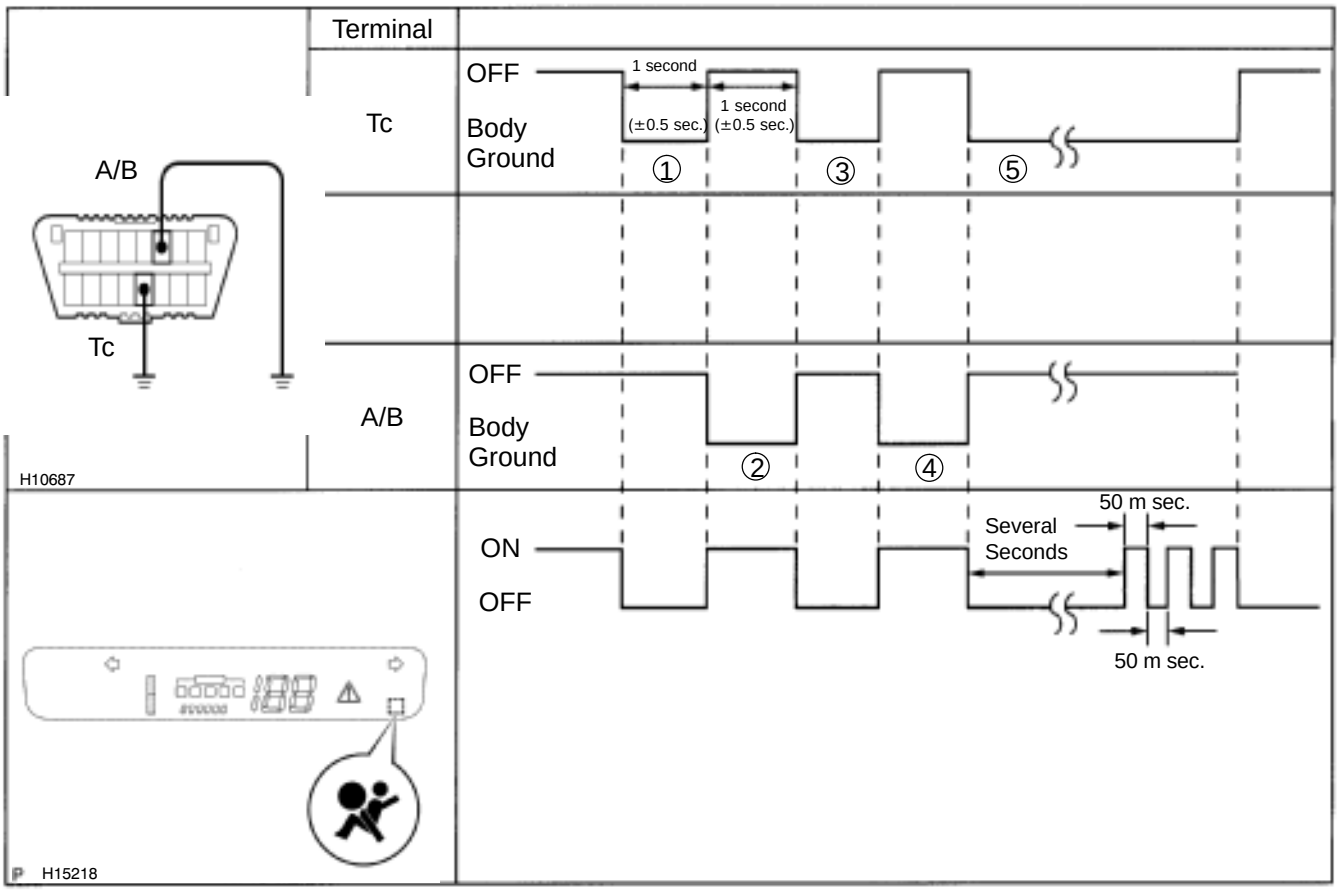

(d) Several seconds after doing the clearing procedure, the SRS warning light will blink in a 50 – m sec. cycle to indicate the codes which have been cleared.

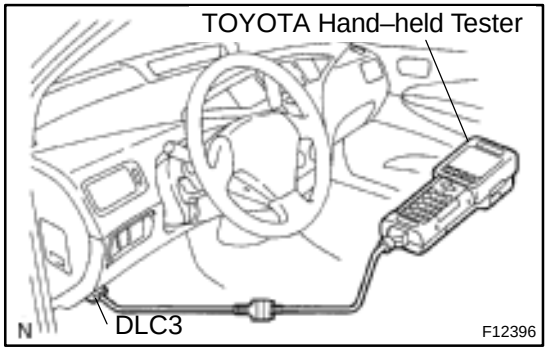

6. DTC CLEARANCE (Using TOYOTA hand–held tester)

(a) Hook up the TOYOTA hand–held tester to the DLC3.

(b) Clear the DTCs by following the prompts on the tester screen.

HINT:

Please refer to the TOYOTA hand–held tester operation's manual for further details.

7. RELEASE METHOD OF AIRBAG ACTIVATION PREVENTION MECHANISM

An airbag activation prevention mechanism is built into the connector for the squib circuit of the SRS.

When release of the airbag activation prevention mechanism is directed in the troubleshooting procedure, as shown in the illustration of the connectors on the next pages, insert paper which has the same thickness as the male terminal between the terminal and the short spring.

CAUTION:

Never release the airbag activation prevention mechanism on the squib connector.

NOTICE:

- **Do not release the airbag activation prevention mechanism unless specifically directed by the troubleshooting procedure.**
- **If the inserted paper is too thick the terminal and short spring may be damaged, so always use paper with the same thickness as the male terminal.**

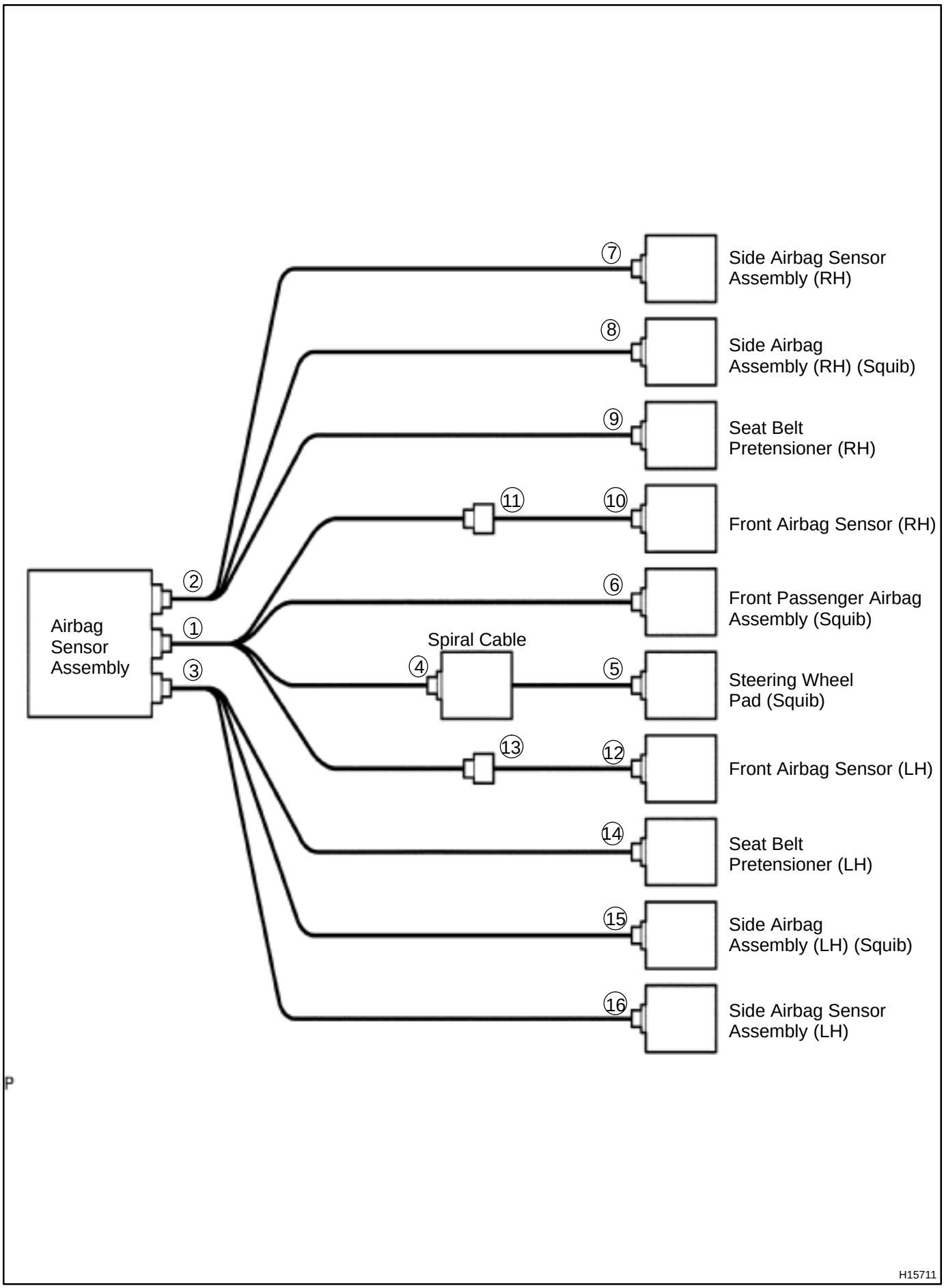
Airbag Sensor Assembly
2
1
3
Spiral Cable
4
5
Steering Wheel Pad (Squib)
7
Side Airbag Sensor Assembly (RH)
8
Side Airbag Assembly (RH) (Squib)
9
Seat Belt Pretensioner (RH)
11
10
Front Airbag Sensor (RH)
6
Front Passenger Airbag Assembly (Squib)
13
12
Front Airbag Sensor (LH)
14
Seat Belt Pretensioner (LH)
15
Side Airbag Assembly (LH) (Squib)
16
Side Airbag Sensor Assembly (LH)
H15711

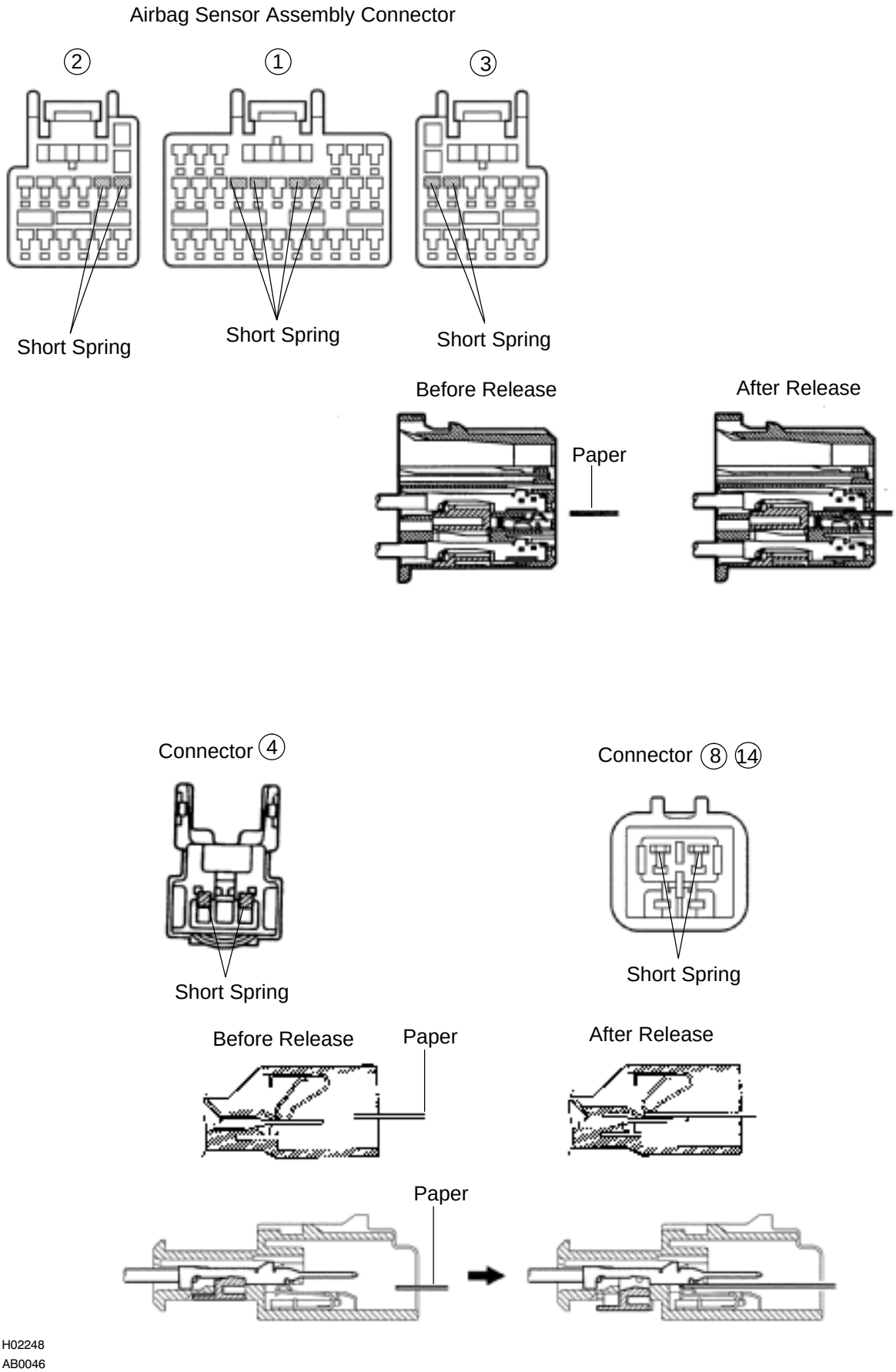

H01356
H01233
AB0130 H02248
AB0045 AB0046
H02249

H11587

DI6OZ–06

DIAGNOSTIC TROUBLE CODE CHART

If a malfunction code is displayed during the DTC check, check the circuit listed for that code in the table below (Proceed to the page given for that circuit.).

DTC No. (See Page)	Detection Item	Trouble Area	SRS Warning Light
B0100/13 (DI–510)	• Short in D squib circuit	• Steering wheel pad (squib) • Spiral cable • Airbag sensor assembly • Wire harness	ON
B0101/14 (DI–515)	• Open in D squib circuit	• Steering wheel pad (squib) • Spiral cable • Airbag sensor assembly • Wire harness	ON
B0102/11 (DI–519)	• Short in D squib circuit (to ground)	• Steering wheel pad (squib) • Spiral cable • Airbag sensor assembly • Wire harness	ON
B0103/12 (DI–523)	• Short in D squib circuit (to B+)	• Steering wheel pad (squib) • Spiral cable • Airbag sensor assembly • Wire harness	ON
B0105/53 (DI–527)	• Short in P squib circuit	• Front passenger airbag assembly (squib) • Airbag sensor assembly • Wire harness	ON
B0106/54 (DI–531)	• Open in P squib circuit	• Front passenger airbag assembly (squib) • Airbag sensor assembly • Wire harness	ON
B0107/51 (DI–534)	• Short in P squib circuit (to ground)	• Front passenger airbag assembly (squib) • Airbag sensor assembly • Wire harness	ON
B0108/52 (DI–537)	• Short in P squib circuit (to B+)	• Front passenger airbag assembly (squib) • Airbag sensor assembly • Wire harness	ON
B0110/43 (DI–540)	• Short in side squib (RH) circuit	• Side airbag assembly RH (squib) • Airbag sensor assembly • Wire harness	Blink
B0111/44 (DI–544)	• Open in side squib (RH) circuit	• Side airbag assembly RH (squib) • Airbag sensor assembly • Wire harness	Blink
B0112/41 (DI–550)	• Short in side squib (RH) circuit (to ground)	• Side airbag assembly RH (squib) • Airbag sensor assembly • Wire harness	Blink
B0113/42 (DI–550)	• Short in side squib (RH) circuit (to B+)	• Side airbag assembly RH (squib) • Airbag sensor assembly • Wire harness	Blink
B0115/47 (DI–553)	• Short in side squib (LH) circuit	• Side airbag assembly LH (squib) • Airbag sensor assembly • Wire harness	Blink
B0116/48 (DI–557)	• Open in side squib (LH) circuit	• Side airbag assembly LH (squib) • Airbag sensor assembly • Wire harness	Blink

DTC No. (See Page)	Detection Item	Trouble Area	SRS Warning Light
B0117/45 (DI–560)	• Short in side squib (LH) circuit (to ground)	• Side airbag assembly LH (squib) • Airbag sensor assembly • Wire harness	Blink
B0118/46 (DI–563)	• Short in side squib (LH) circuit (to B+)	• Side airbag assembly LH (squib) • Airbag sensor assembly • Wire harness	Blink
B0130/63 (DI–566)	• Short in P/T squib (RH) circuit	• Seat belt pretensioner RH (squib) • Airbag sensor assembly • Wire harness	Blink
B0131/64 (DI–570)	• Open in P/T squib (RH) circuit	• Seat belt pretensioner RH (squib) • Airbag sensor assembly • Wire harness	Blink
B0132/61 (DI–573)	• Short in P/T squib (RH) circuit (to ground)	• Seat belt pretensioner RH (squib) • Airbag sensor assembly • Wire harness	Blink
B0133/62 (DI–576)	• Short in P/T squib (RH) circuit (to B+)	• Seat belt pretensioner RH (squib) • Airbag sensor assembly • Wire harness	Blink
B0135/73 (DI–579)	• Short in P/T squib (LH) circuit	• Seat belt pretensioner LH (squib) • Airbag sensor assembly • Wire harness	Blink
B0136/74 (DI–583)	• Open in P/T squib (LH) circuit	• Seat belt pretensioner LH (squib) • Airbag sensor assembly • Wire harness	Blink
B0137/71 (DI–586)	• Short in P/T squib (LH) circuit (to ground)	• Seat belt pretensioner LH (squib) • Airbag sensor assembly • Wire harness	Blink
B0138/72 (DI–589)	• Short in P/T squib (LH) circuit (to B+)	• Seat belt pretensioner LH (squib) • Airbag sensor assembly • Wire harness	Blink
B1100/31 (DI–592)	• Airbag sensor assembly malfunction	• Airbag sensor assembly	ON
B1135/24 (DI–594)	• Harf connection in airbag sensor assembly connector	• Airbag sensor assembly • Wire harness	Blink
B1140/32 (DI–597)	• Side airbag sensor assembly (RH) malfunction	• Side airbag sensor assembly (RH) • Airbag sensor assembly • Wire harness	Blink
B1141/33 (DI–605)	• Side airbag sensor assembly (LH) malfunction	• Side airbag sensor assembly (LH) • Airbag sensor assembly • Wire harness	Blink
B1156/B1157/15 (DI–613)	• Front airbag sensor (RH) malfunction	• Front airbag sensor (RH) • Airbag sensor assembly • Instrument panel wire harness • Engine room No. 2 wire harness	ON
B1158/B1159/16 (DI–621)	• Front airbag sensor (LH) malfunction	• Front airbag sensor (LH) • Airbag sensor assembly • Instrument panel wire harness • Engine room main wire harness	ON
Normal (DI–629)	• System normal	–	OFF
	• Voltage source drop	• Battery • Airbag sensor assembly	ON

HINT:

- When the SRS warning light remains lit up and the DTC is the normal code, this means a voltage source drops.
  This malfunction is not stored in memory by the airbag sensor assembly and if the power source voltage returns to normal, the SRS warning light will automatically go out.
- When 2 or more codes are indicated, the codes will be displayed in numeral order starting from the lowest numbered code.
- If a code not listed on the chart is displayed, the airbag sensor assembly is faulty.

DI6P1–07

TERMINALS OF ECU

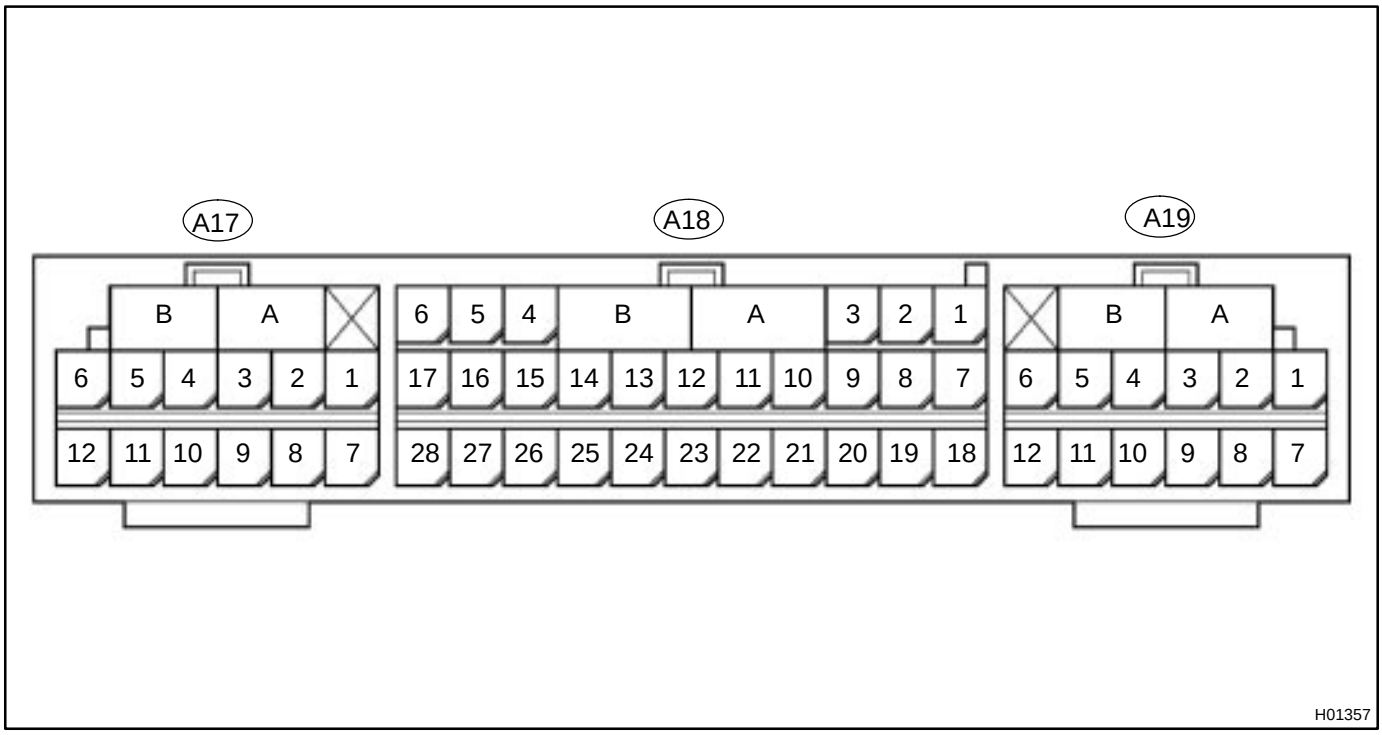

No.	Symbol	Terminal Name
A	–	Electrical Connector Check Mechanism
B	–	Electrical Connector Check Mechanism
A18 – 3	LA	SRS Warning Light
A18 – 5	IG2	Power Source
A18 – 6	ACC	Power Source
A18 – 9	+SR	Front Airbag Sensor (RH)
A18 – 10	P+	Squib (Passenger)
A18 – 11	P–	Squib (Passenger)
A18 – 12	SIL	Diagnosis
A18 – 13	D–	Squib (Driver)
A18 – 14	D+	Squib (Driver)
A18 – 15	+SL	Front Airbag Sensor (LH)
A18 – 19	Tc	Diagnosis
A18 – 20	–SR	Front Airbag Sensor (RH)
A18 – 23	GSW2	ECM
A18 – 26	–SL	Front Airbag Sensor (LH)
A18 – 27	E1	Ground
A18 – 28	E2	Ground
A17 – 1	PL–	Squib (Seat Belt Pretensioner, LH)
A17 – 2	PL+	Squib (Seat Belt Pretensioner, LH)
A17 – 5	SFL–	Squib (Side, LH)
A17 – 6	SFL+	Squib (Side, LH)
A17 – 7	VUPL	Side Airbag Sensor (LH)
A17 – 9	ESL	Side Airbag Sensor (LH)
A17 – 10	SSL+	Side Airbag Sensor (LH)

No.	Symbol	Terminal Name
A17 – 11	LBE+	Body ECU
A17 – 12	SSL–	Side Airbag Sensor (LH)
A19 – 1	SFR+	Squib (Side, RH)
A19 – 2	SFR–	Squib (Side, RH)
A19 – 5	PR+	Squib (Pretensioner, RH)
A19 – 6	PR–	Squib (Pretensioner, RH)
A19 – 7	SSR–	Side Airbag Sensor (RH)
A19 – 9	SSR+	Side Airbag Sensor (RH)
A19 – 10	ESR	Side Airbag Sensor (RH)
A19 – 12	VUPR	Side Airbag Sensor (RH)

DI6P3–06

CIRCUIT INSPECTION

DTC	B0100/13	Short in D Squib Circuit

CIRCUIT DESCRIPTION

The D squib circuit consists of the airbag sensor assembly, spiral cable and steering wheel pad.
It causes the airbag to deploy when the airbag deployment conditions are satisfied.
For details of the function of each component, see OPERATION on page RS–2.
DTC B0100/13 is recorded when a short is detected in the D squib circuit.

DTC No.	DTC Detecting Condition	Trouble Area
B0100/13	• Short circuit between D+ wire harness and D– wire harness of squib • D squib malfunction • Spiral cable malfunction • Airbag sensor assembly malfunction	• Steering wheel pad (D squib) • Spiral cable • Airbag sensor assembly • Wire harness

WIRING DIAGRAM

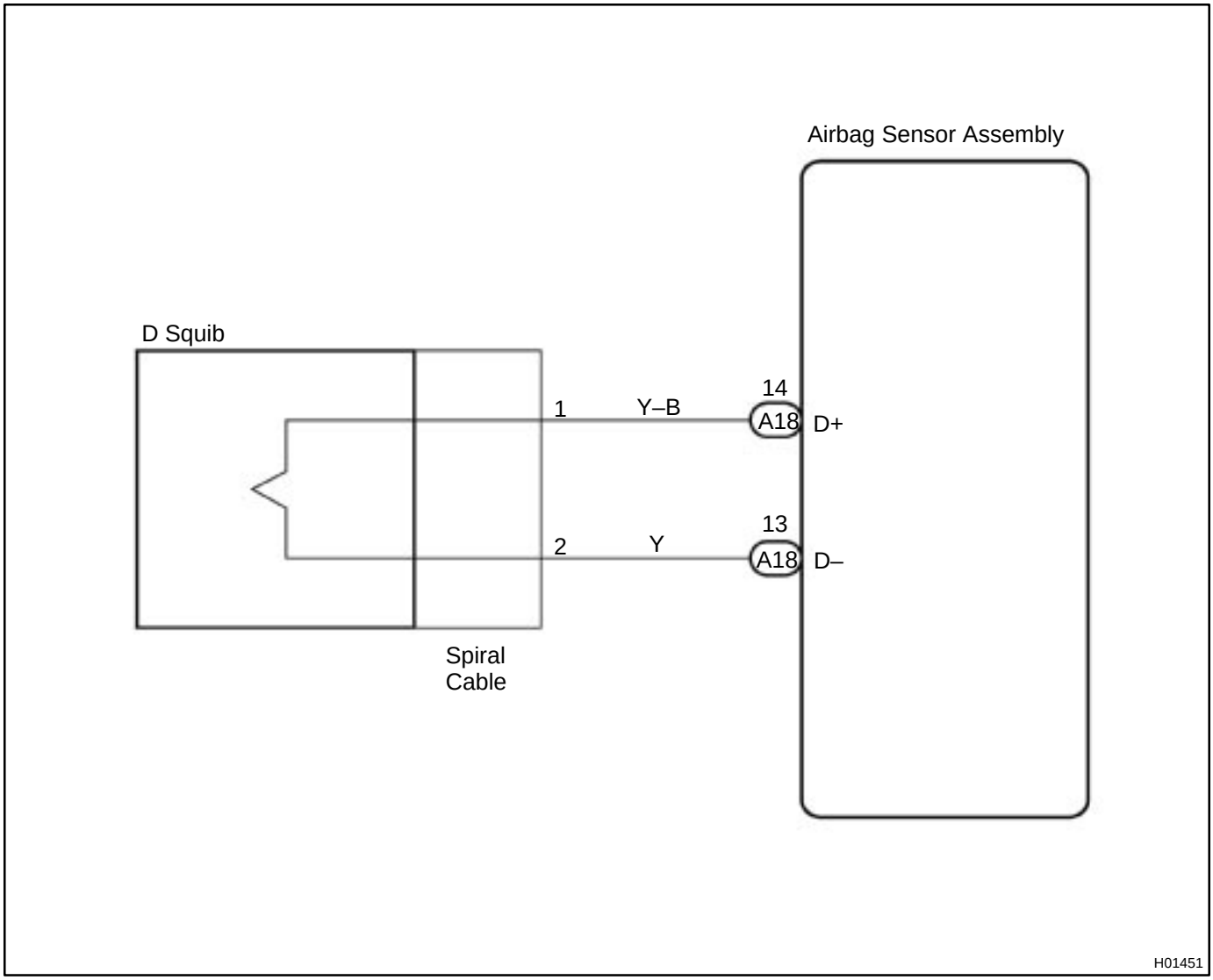

INSPECTION PROCEDURE

1	**Prepare for inspection (See step 1 on page DI–629).**

2	**Check D squib circuit.**

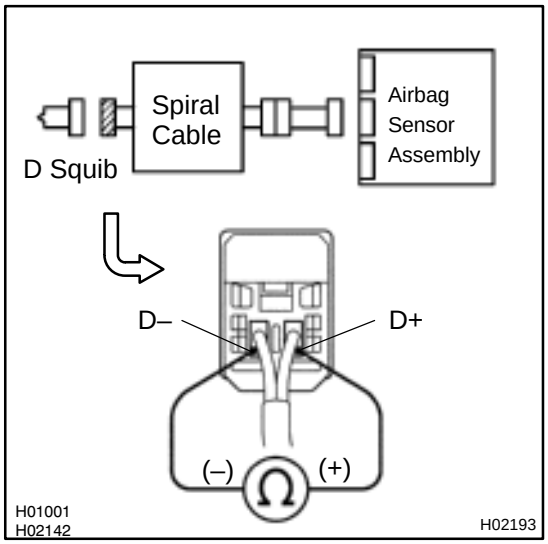

PREPARATION:

Release the airbag activation prevention mechanism of the connector (on the airbag sensor assembly side) between the airbag sensor assembly and the spiral cable (See page DI–497).

CHECK:

For the connector (on the spiral cable side) between the spiral cable and the steering wheel pad, measure the resistance between D+ and D–.

OK:

Resistance: 1 MΩ or Higher

NG	**Go to step 5.**

OK

3	Check airbag sensor assembly.

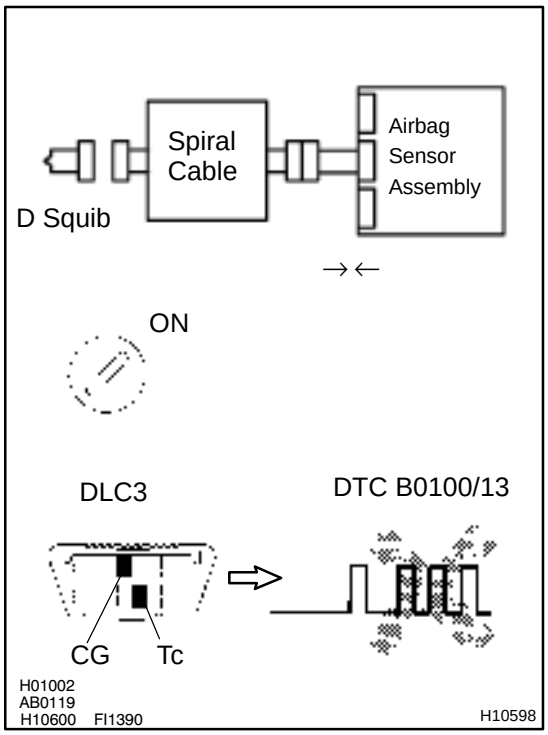

PREPARATION:

(a) Connect the connector to the airbag sensor assembly.
(b) Connect negative (–) terminal cable to the battery, and wait at least for 2 seconds.

CHECK:

(a) Turn the ignition switch to ON and wait at least for 20 seconds.
(b) Clear the DTC stored in memory (See page DI–497).
(c) Turn the ignition switch to LOCK, and wait at least for 20 seconds.
(d) Turn the ignition switch to ON, and wait at least for 20 seconds.
(e) Check the DTC (See page DI–497).

OK:

DTC B0100/13 is not output.

HINT:
Codes other than code B0100/13 may be output at this time, but they are not relevant to this check.

NG → **Replace airbag sensor assembly.**

OK

4	Check D squib.

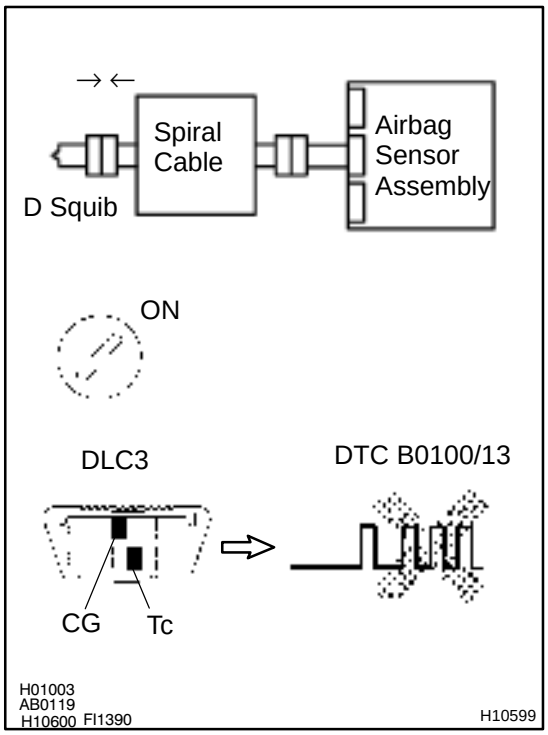

PREPARATION:

(a) Turn the ignition switch to LOCK.
(b) Disconnect negative (–) terminal cable from the battery, and wait at least for 90 seconds.
(c) Connect the steering wheel pad connector.
(d) Connect negative (–) terminal cable to the battery, and wait at least for 2 seconds.

CHECK:

(a) Turn the ignition switch to LOCK, and wait at least for 20 seconds.
(b) Turn the ignition switch to ON, and wait at least for 20 seconds.
(c) Clear the DTC stored in memory (See page DI–497).
(d) Turn the ignition switch to LOCK, and wait at least for 20 seconds.
(e) Turn the ignition switch to ON, and wait at least for 20 seconds.
(f) Check the DTC (See page DI–497).

OK:

DTC B0100/13 is not output.

HINT:

Codes other than code B0100/13 may be output at this time, but they are not relevant to this check.

NG	Replace steering wheel pad.

OK

From the results of the above inspection, the malfunctioning part can now be considered normal. To make sure of this, use the simulation method to check.

5	Check spiral cable.

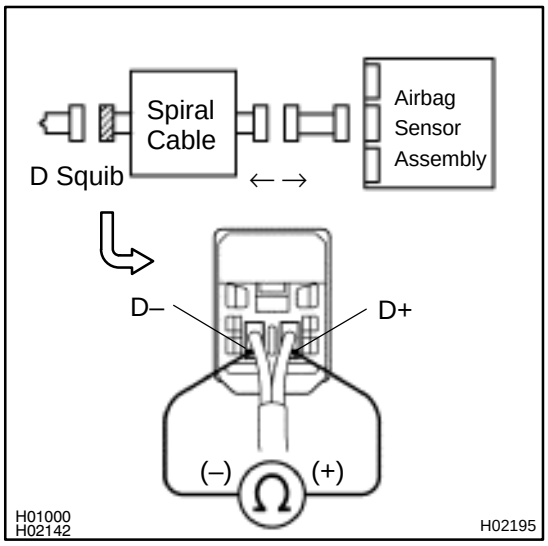

PREPARATION:

(a) Disconnect the connector between the airbag sensor assembly and the spiral cable.

(b) Release the airbag activation prevention mechanism of the spiral cable connector on the airbag sensor assembly side (See page DI–497).

CHECK:

For the connector (on the spiral cable side) between the spiral cable and the steering wheel pad, measure the resistance between D+ and D–.

OK:

Resistance: 1 MΩ or Higher

NG	Repair or replace spiral cable.

OK

6	Check harness between airbag sensor assembly and spiral cable.

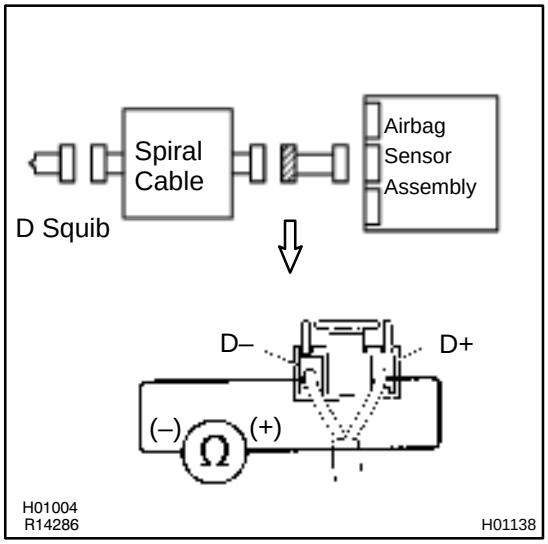

PREPARATION:

Release the airbag activation prevention mechanism of the connector (on the airbag sensor assembly side) between the airbag sensor assembly and the spiral cable (See page DI–497).

CHECK:

For the connector (on the spiral cable side) between the airbag sensor assembly and the spiral cable, measure the resistance between D+ and D–.

OK:

Resistance: 1 MΩ or Higher

NG	Repair or replace harness or connector between airbag sensor assembly and spiral cable.

OK

From the results of the above inspection, the malfunctioning part can now be considered normal. To make sure of this, use the simulation method to check.

DTC	B0101/14	Open in D Squib Circuit

CIRCUIT DESCRIPTION

The D squib circuit consists of the airbag sensor assembly, spiral cable and steering wheel pad.
It causes the airbag to deploy when the airbag deployment conditions are satisfied.
For details of the function of each component, see OPERATION on page RS–2.
DTC B0101/14 is recorded when an open is detected in the D squib circuit.

DTC No.	DTC Detecting Condition	Trouble Area
B0101/14	• Open circuit in D+ wire harness or D– wire harness of squib • D squib malfunction • Spiral cable malfunction • Airbag sensor assembly malfunction	• Steering wheel pad (D squib) • Spiral cable • Airbag sensor assembly • Wire harness

WIRING DIAGRAM

See page DI–510.

INSPECTION PROCEDURE

1	**Prepare for inspection (See step 1 on page DI–629).**

2	**Check D squib circuit.**

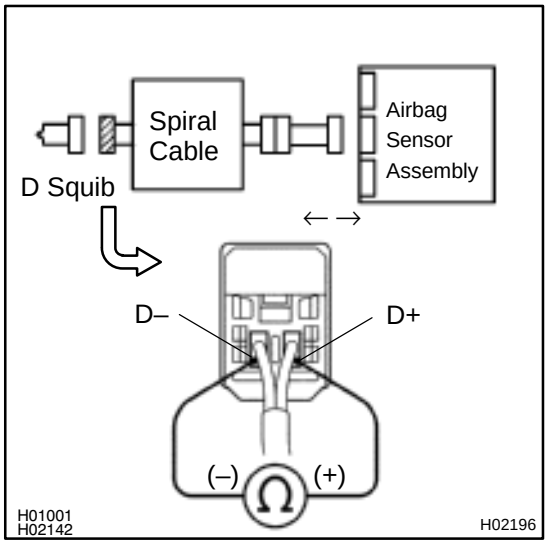

CHECK:

For the connector (on the spiral cable side) between the spiral cable and the steering wheel pad, measure the resistance between D+ and D–.

OK:

Resistance: Below 1 Ω

NG → **Go to step 5.**

OK

3	Check airbag sensor assembly.

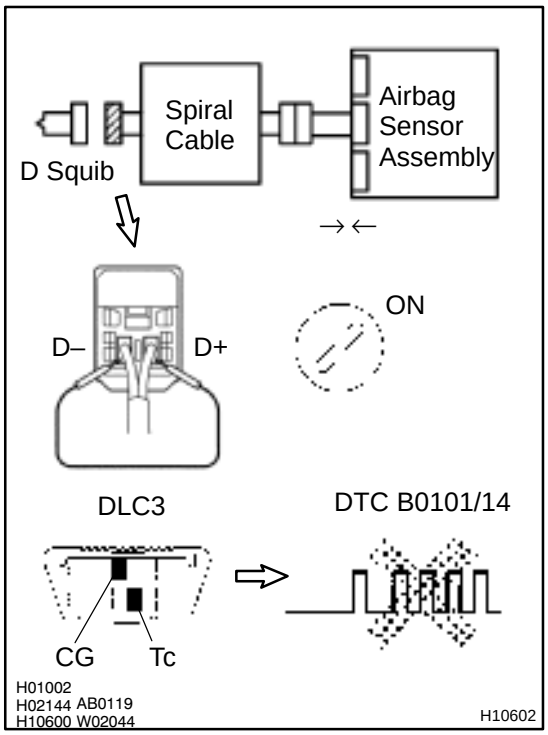

PREPARATION:

(a) Connect the connector to the airbag sensor assembly.
(b) Using a service wire, connect D+ and D– of the connector (on the spiral cable side) between the spiral cable and the steering wheel pad.
(c) Connect negative (–) terminal cable to the battery, and wait at least for 2 seconds.

CHECK:

(a) Turn the ignition switch to ON, and wait at least for 20 seconds.
(b) Clear the DTC stored in memory (See page DI–497).
(c) Turn the ignition switch to LOCK, and wait at least for 20 seconds.
(d) Turn the ignition switch to ON, and wait at least for 20 seconds.
(e) Check the DTC (See page DI–497).

OK:

DTC B0101/14 is not output.

HINT:

Codes other than code B0101/14 may be output at this time, but they are not relevant to this check.

NG	Replace airbag sensor assembly.

OK

4	Check D squib.

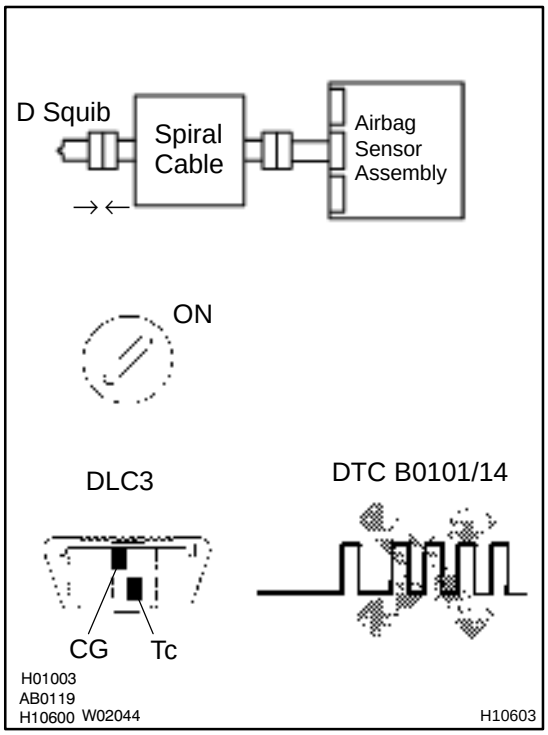

PREPARATION:

(a) Turn the ignition switch to LOCK.
(b) Disconnect negative (–) terminal cable from the battery, and wait at least for 90 seconds.
(c) Connect the steering wheel pad connector.
(d) Connect negative (–) terminal cable to the battery, and wait at least for 2 seconds.

CHECK:

(a) Turn the ignition switch to ON, and wait at least for 20 seconds.
(b) Clear the DTC stored in memory (See page DI–497).
(c) Turn the ignition switch to LOCK, and wait at least for 20 seconds.
(d) Turn the ignition switch to ON, and wait at least for 20 seconds.
(e) Check the DTC (See page DI–497).

OK:

DTC B0101/14 is not output.

HINT:

Codes other than code B0101/14 may be output at this time, but they are not relevant to this check.

NG	Replace steering wheel pad.

OK

From the results of the above inspection, the malfunctioning part can now be considered normal. To make sure of this, use the simulation method to check.

5	Check spiral cable.

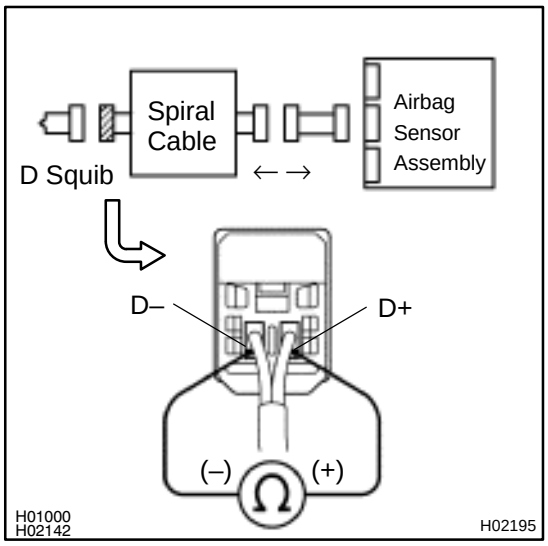

PREPARATION:
Disconnect the connector between the airbag sensor assembly and the spiral cable.

CHECK:
For the connector (on the spiral cable side) between the spiral cable and the steering wheel pad, measure the resistance between D+ and D–.

OK:
Resistance: Below 1 Ω

NG → **Repair or replace spiral cable.**

OK

6	Check harness between airbag sensor assembly and spiral cable.

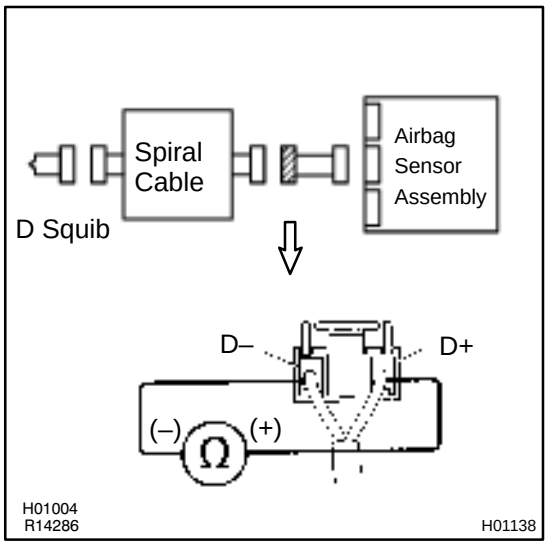

CHECK:
For the connector (on the spiral cable side) between the airbag sensor assembly and the spiral cable, measure the resistance between D+ and D–.

OK:
Resistance: Below 1 Ω

NG → **Repair or replace harness or connector between airbag sensor assembly and spiral cable.**

OK

From the results of the above inspection, the malfunctioning part can now be considered normal. To make sure of this, use the simulation method to check.

DI6P5–04

DTC	B0102/11	Short in D Squib Circuit (to Ground)

CIRCUIT DESCRIPTION

The D squib circuit consists of the airbag sensor assembly, spiral cable and steering wheel pad.
It causes the SRS to deploy when the SRS deployment conditions are satisfied.
For details of the function of each component, see OPERATION on page RS–2.
DTC B0102/11 is recorded when a ground short is detected in the D squib circuit.

DTC No.	DTC Detecting Condition	Trouble Area
B0102/11	• Short circuit in D squib wire harness (to ground) • D squib malfunction • Spiral cable malfunction • Airbag sensor assembly malfunction	• Steering wheel pad (D squib) • Spiral cable • Airbag sensor assembly • Wire harness

WIRING DIAGRAM

See page DI–510.

INSPECTION PROCEDURE

1	**Prepare for inspection (See step 1 on page DI–629).**

2	**Check D squib circuit.**

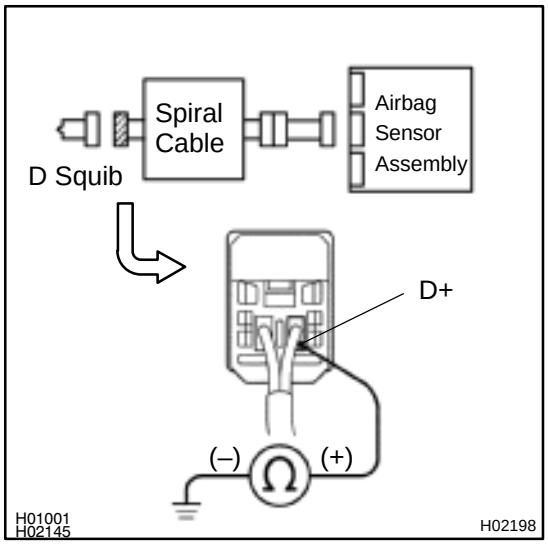

CHECK:

For the connector (on the spiral cable side) between the spiral cable and the steering wheel pad, measure the resistance between D+ and body ground.

OK:

Resistance: 1 MΩ or Higher

NG → **Go to step 5.**

OK

3	Check airbag sensor assembly.

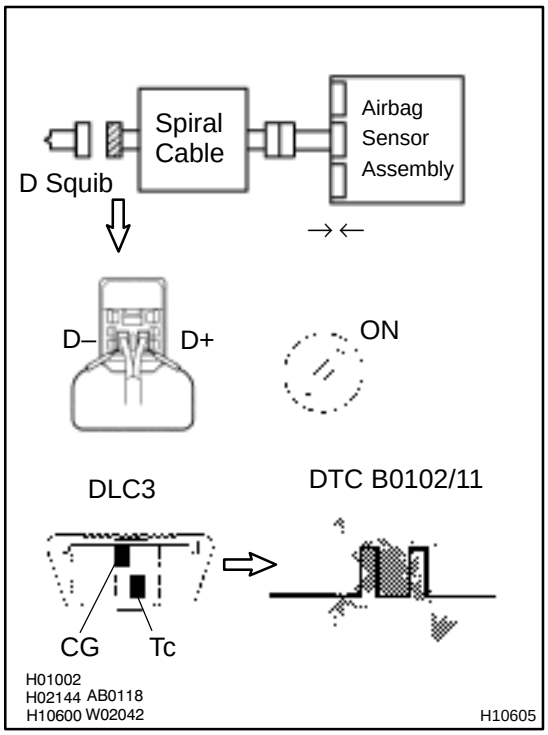

PREPARATION:

(a) Connect the connector to the airbag sensor assembly.
(b) Using a service wire, connect D+ and D– of the connector (on the spiral cable side) between the spiral cable and the steering wheel pad.
(c) Connect negative (–) terminal cable to the battery, and wait at least for 2 seconds.

CHECK:

(a) Turn the ignition switch to ON, and wait at least for 20 seconds.
(b) Clear the DTC stored in memory (See step 5 on page DI–497).
(c) Turn the ignition switch to LOCK, and wait at least for 20 seconds.
(d) Turn the ignition switch to ON, and wait at least for 20 seconds.
(e) Check the DTC (See page DI–497).

OK:

DTC B0102/11 is not output.

HINT:
Codes other than code B0102/11 may be output at this time, but they are not relevant to this check.

NG	Replace airbag sensor assembly.

OK

4	Check D squib.

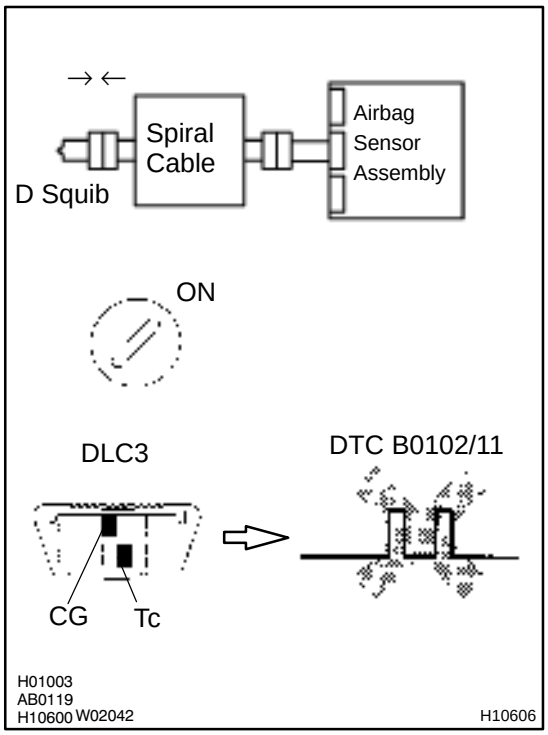

PREPARATION:

(a) Turn the ignition switch to LOCK.
(b) Disconnect negative (–) terminal cable from the battery, and wait at least for 90 seconds.
(c) Connect the steering wheel pad connector.
(d) Connect negative (–) terminal cable to the battery, and wait at least for 2 seconds.

CHECK:

(a) Turn the ignition switch to ON, and wait at least for 20 seconds.
(b) Clear the DTC stored in memory (See step 5 on page DI–497).
(c) Turn the ignition switch to LOCK, and wait at least for 20 seconds.
(d) Turn the ignition switch to ON, and wait at least for 20 seconds.
(e) Check the DTC (See page DI–497).

OK:

DTC B0102/11 is not output.

HINT:

Codes other than code B0102/11 may be output at this time, but they are not relevant to this check.

NG → **Replace steering wheel pad.**

OK

From the results of the above inspection, the malfunctioning part can now be considered normal. To make sure of this, use the simulation method to check. If the malfunctioning part can not be detected by the simulation method, replace all SRS components including the wire harness.

5	Check spiral cable.

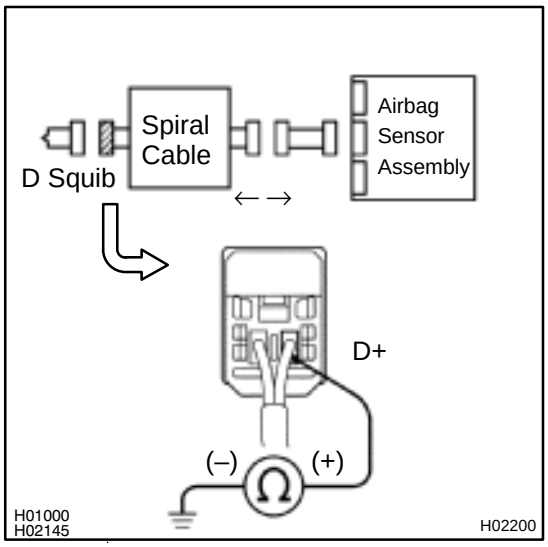

PREPARATION:
Disconnect the connector between the airbag sensor assembly and the spiral cable.

CHECK:
For the connector (on the spiral cable side) between the steering wheel pad and the spiral cable, measure the resistance between D+ and body ground.

OK:

Resistance: 1 MΩ or Higher

NG → **Repair or replace spiral cable.**

OK

6	Check harness between airbag sensor assembly and spiral cable.

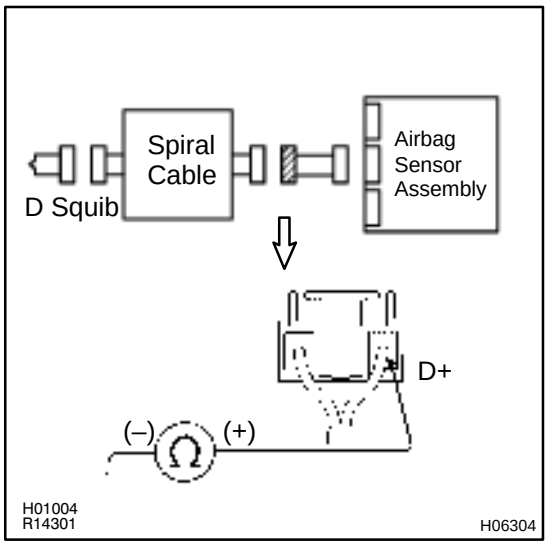

CHECK:
For the connector (on the spiral cable side) between the spiral cable and the airbag sensor assembly, measure the resistance between D+ and body ground.

OK:

Resistance: 1 MΩ or Higher

NG → **Repair or replace harness between airbag sensor assembly and spiral cable.**

OK

From the results of the above inspection, the malfunctioning part can now be considered normal. To make sure of this, use the simulation method to check. If the malfunctioning part can not be detected by the simulation method, replace all SRS components including the wire harness.

DTC	B0103/12	Short in D Squib Circuit (to B+)

CIRCUIT DESCRIPTION

The D squib circuit consists of the airbag sensor assembly, spiral cable and steering wheel pad.
It causes the SRS to deploy when the SRS deployment conditions are satisfied.
For details of the function of each component, see OPERATION on page RS–2.
DTC B0103/12 is recorded when a B+ short is detected in the D squib circuit.

DTC No.	DTC Detecting Condition	Trouble Area
B0103/12	• Short circuit in D squib wire harness (to B+) • D squib malfunction • Spiral cable malfunction • Airbag sensor assembly malfunction	• Steering wheel pad (D squib) • Spiral cable • Airbag sensor assembly • Wire harness

WIRING DIAGRAM

See page DI–510.

INSPECTION PROCEDURE

1	**Prepare for inspection (See step 1 on page DI–629).**

2	**Check D squib circuit.**

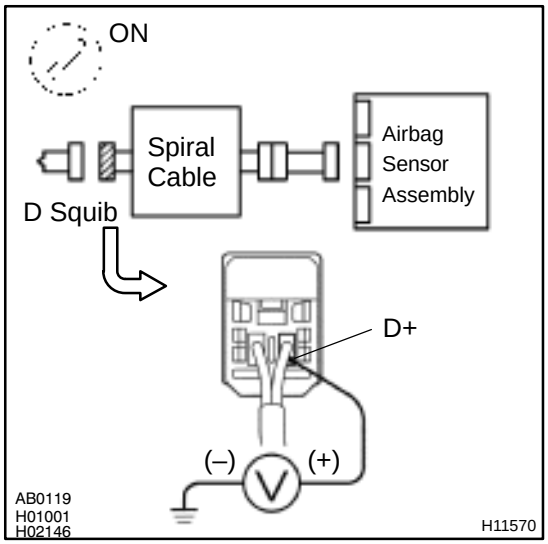

CHECK:

(a) Turn ignition switch to ON.

(b) For the connector (on the spiral cable side) between the spiral cable and the steering wheel pad, measure the voltage between D+ and body ground.

OK:

Voltage: 0 V

NG → **Go to step 5.**

OK

3	Check airbag sensor assembly.

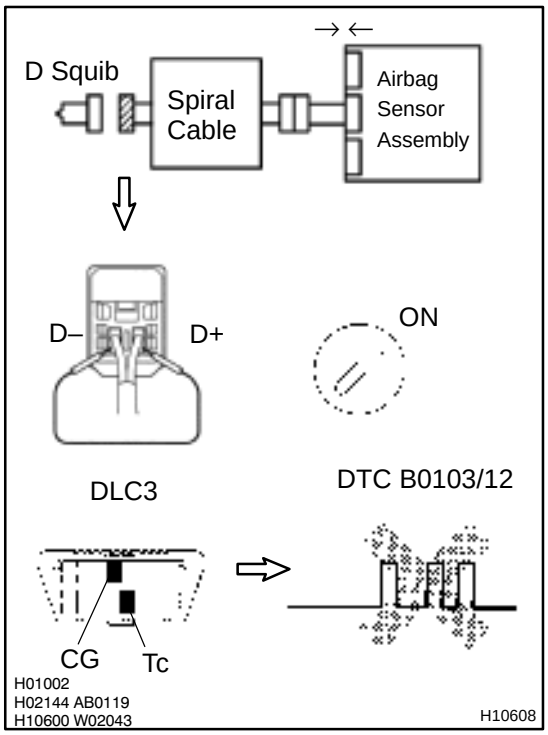

PREPARATION:

(a) Connect the connector to the airbag sensor assembly.
(b) Using a service wire, connect D+ and D– of the connector (on the spiral cable side) between the spiral cable and the steering wheel pad.
(c) Connect negative (–) terminal cable to the battery, and wait at least for 2 seconds.

CHECK:

(a) Turn the ignition switch to ON, and wait at least for 20 seconds.
(b) Clear the DTC stored in memory (See step 5 on page DI–497).
(c) Turn the ignition switch to LOCK, and wait at least for 20 seconds.
(d) Turn the ignition switch to ON, and wait at least for 20 seconds.
(e) Check the DTC (See page DI–497).

OK:

DTC B0103/12 is not output.

HINT:
Codes other than code B0103/12 may be output at this time, but they are not relevant to this check.

NG	Replace airbag sensor assembly.

OK

4	Check D squib.

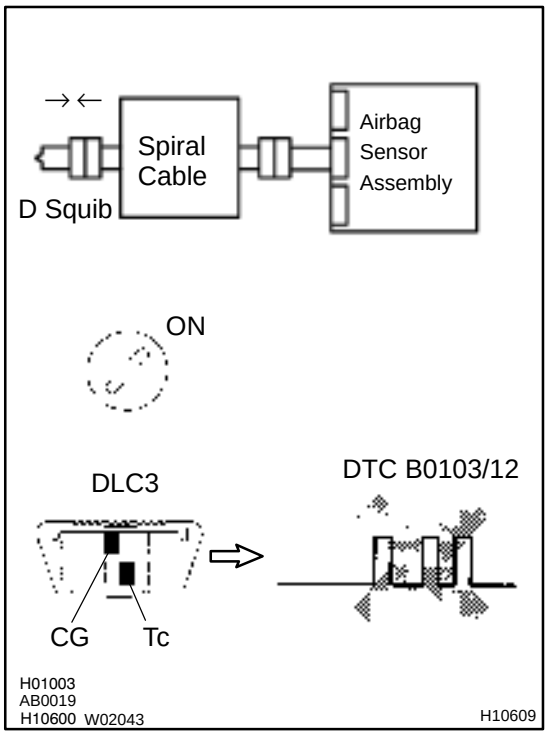

PREPARATION:

(a) Turn the ignition switch to LOCK.
(b) Disconnect negative (–) terminal cable from the battery, and wait at least for 90 seconds.
(c) Connect the steering wheel pad connector.
(d) Connect negative (–) terminal cable to the battery, and wait at least for 2 seconds.

CHECK:

(a) Turn the ignition switch to ON, and wait at least for 20 seconds.
(b) Clear the DTC stored in memory (See step 5 on page DI–497).
(c) Turn the ignition switch to LOCK, and wait at least for 20 seconds.
(d) Turn the ignition switch to ON, and wait at least for 20 seconds.
(e) Check the DTC (See page DI–497).

OK:

DTC B0103/12 is not output.

HINT:

Codes other than code B0103/12 may be output at this time, but they are not relevant to this check.

NG	Replace steering wheel pad.

OK

From the results of the above inspection, the malfunctioning part can now be considered normal. To make sure of this, use the simulation method to check. If the malfunctioning part can not be detected by the simulation method, replace all SRS components including the wire harness.

5	Check spiral cable.

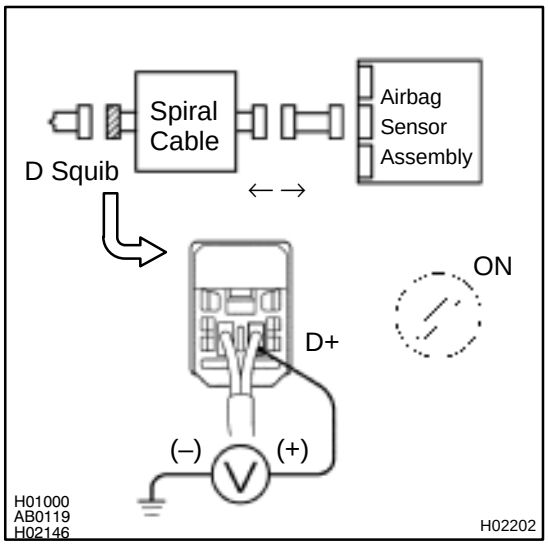

PREPARATION:

(a) Turn the ignition switch to LOCK.

(b) Disconnect the connector between the airbag sensor assembly and the spiral cable.

CHECK:

(a) Turn the ignition switch to ON.

(b) For the connector (on the spiral cable side) between the spiral cable and the steering wheel pad, measure the voltage between D+ and body ground.

OK:

Voltage: 0 V

NG	Repair or replace spiral cable.

OK

6	Check harness between airbag sensor assembly and spiral cable.

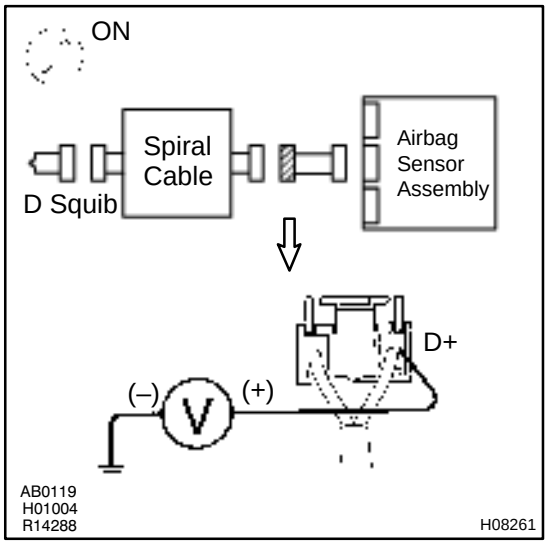

CHECK:

(a) Turn the ignition switch to ON.

(b) For the connector (on the spiral cable side) between the spiral cable and airbag sensor assembly, measure the voltage between D+ and body ground.

OK:

Voltage: 0 V

NG	Repair or replace harness between airbag sensor assembly and spiral cable.

OK

From the results of the above inspection, the malfunctioning part can now be considered normal. To make sure of this, use the simulation method to check. If the malfunctioning part can not be detected by the simulation method, replace all SRS components including the wire harness.

DI6P7–06

DTC	B0105/53	Short in P Squib Circuit

CIRCUIT DESCRIPTION

The P squib circuit consists of the airbag sensor assembly and front passenger airbag assembly.
It causes the SRS to deploy when the SRS deployment conditions are satisfied.
For details of the function of each component, see OPERATION on page RS–2.
DTC B0105/53 is recorded when a short is detected in the P squib circuit.

DTC No.	DTC Detecting Condition	Trouble Area
B0105/53	• Short circuit in P squib wire harness • P squib malfunction • Airbag sensor assembly malfunction	• Front passenger airbag assembly (P squib) • Airbag sensor assembly • Wire harness

WIRING DIAGRAM

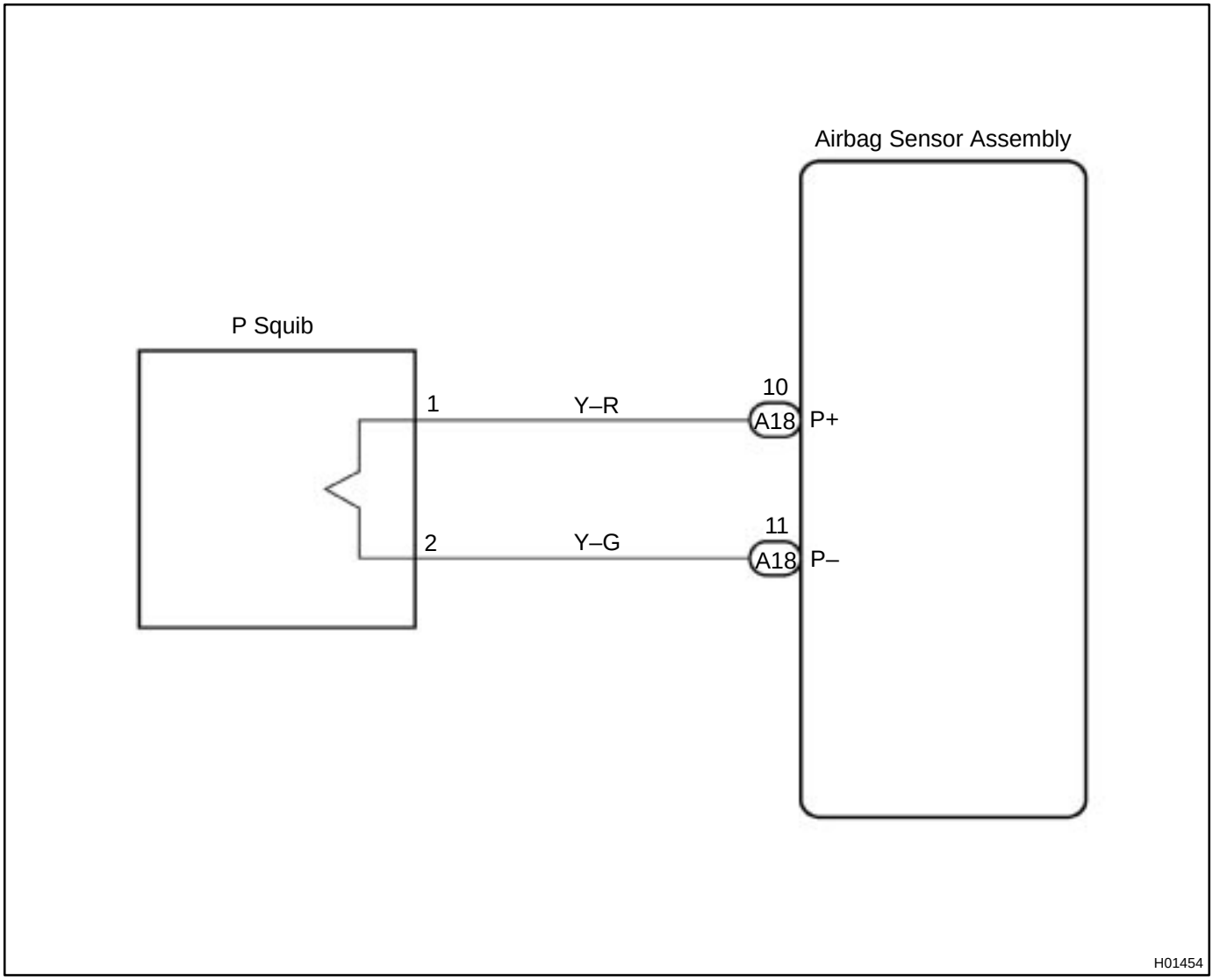

INSPECTION PROCEDURE

1	**Prepare for inspection (See step 1 on page DI–629).**

2	**Check P squib circuit.**

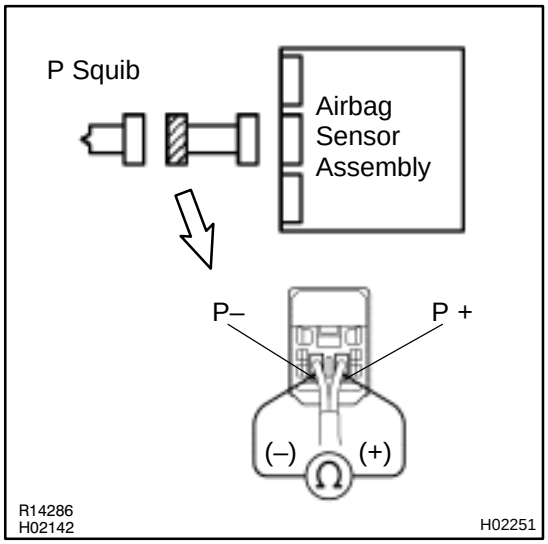

PREPARATION:

Release the airbag activation prevention mechanism of the connector (on the airbag sensor assembly side) between the front passenger airbag assembly and the airbag sensor assembly (See page DI–497).

CHECK:

For the connector (on the front passenger airbag assembly side) between the front passenger airbag assembly and the airbag sensor assembly, measure the resistance between P+ and P–.

OK:

Resistance: 1 MΩ or Higher

NG → **Repair or replace harness or connector between front passenger airbag assembly and airbag sensor assembly.**

OK

3	Check airbag sensor assembly.

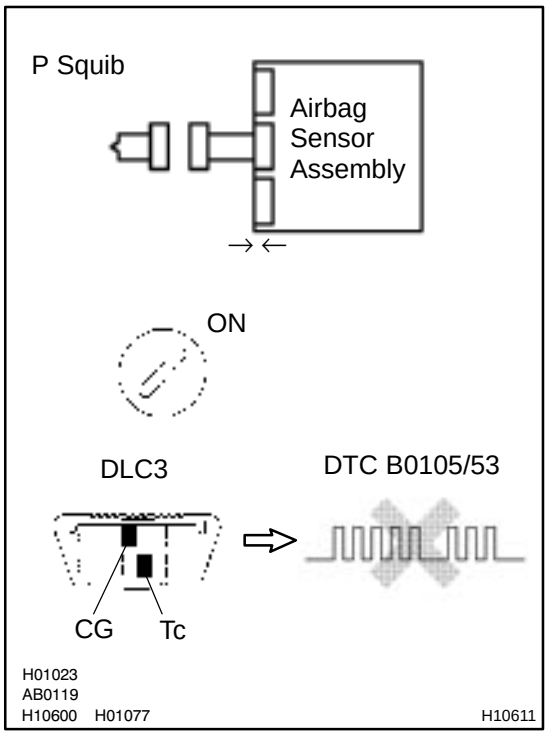

PREPARATION:

(a) Connect the connector to the airbag sensor assembly.
(b) Connect negative (–) terminal cable to the battery, and wait at least for 2 seconds.

CHECK:

(a) Turn the ignition switch to ON and wait at least for 20 seconds.
(b) Clear the DTC stored in memory (See page DI–497).
(c) Turn the ignition switch to LOCK, and wait at least for 20 seconds.
(d) Turn the ignition switch to ON, and wait at least for 20 seconds.
(e) Check the DTC (See page DI–497).

OK:

DTC B0105/53 is not output.

HINT:

Codes other than code B0105/53 may be output at this time, but they are not relevant to this check.

NG → **Replace airbag sensor assembly.**

OK

4	Check P squib.

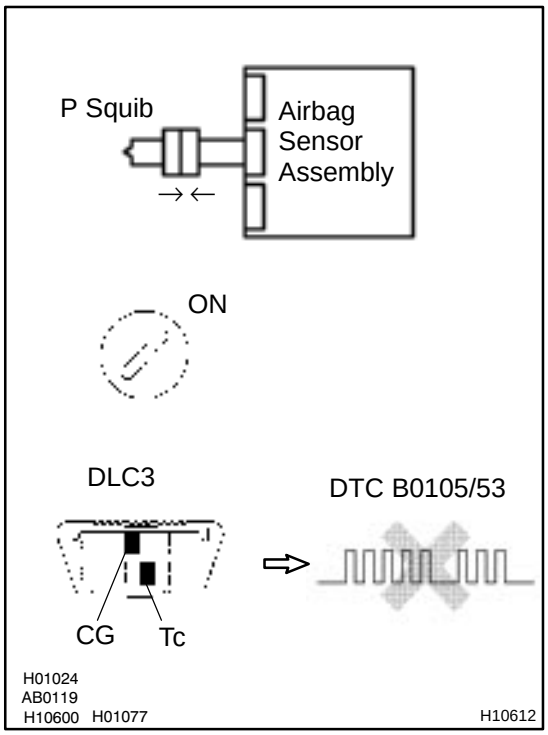

PREPARATION:

(a) Turn the ignition switch to LOCK.
(b) Disconnect negative (–) terminal cable from the battery, and wait at least for 90 seconds.
(c) Connect the front passenger airbag assembly connector.
(d) Connect negative (–) terminal cable to the battery, and wait at least for 2 seconds.

CHECK:

(a) Turn the ignition switch to LOOK, and wait at least for 20 seconds.
(b) Turn the ignition switch to ON, and wait at least for 20 seconds.
(c) Clear the DTC stored in memory (See page DI–497).
(d) Turn the ignition switch to LOCK, and wait at least for 20 seconds.
(e) Turn the ignition switch to ON, and wait at least for 20 seconds.
(f) Check the DTC (See page DI–497).

OK:

DTC B0105/53 is not output.

HINT:

Codes other than code B0105/53 may be output at this time, but they are not relevant to this check.

NG → **Replace front passenger airbag assembly.**

OK

From the results of the above inspection, the malfunctioning part can now be considered normal. To make sure of this, use the simulation method to check.

DI6P8–01

DTC	B0106/54	Open in P Squib Circuit

CIRCUIT DESCRIPTION

The P squib circuit consists of the airbag sensor assembly and front passenger airbag assembly.
It causes the SRS to deploy when the SRS deployment conditions are satisfied.
For details of the function of each component, see OPERATION on page RS–2.
DTC B0106/54 is recorded when an open is detected in the P squib circuit.

DTC No.	DTC Detecting Condition	Trouble Area
B0106/54	• Open circuit in P+ wire harness or P– wire harness of squib • P squib malfunction • Airbag sensor assembly malfunction	• Front passenger airbag assembly (P squib) • Airbag sensor assembly • Wire harness

WIRING DIAGRAM

See page DI–527.

INSPECTION PROCEDURE

1	**Prepare for inspection (See step 1 on page DI–629).**

2	**Check P squib circuit.**

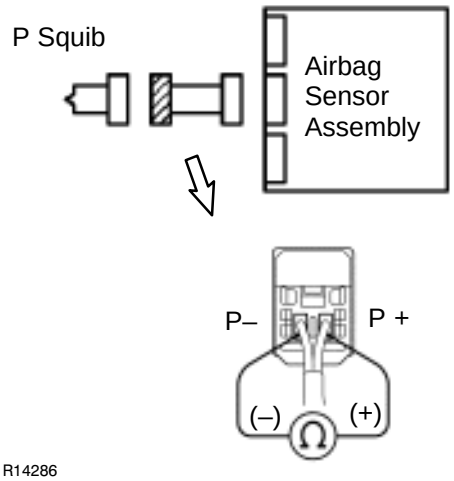

CHECK:

For the connector (on the front passenger airbag assembly side) between the front passenger airbag assembly and the airbag sensor assembly, measure the resistance between P+ and P–.

OK:

Resistance: Below 1 Ω

NG → **Repair or replace harness or connector between front passenger airbag assembly and airbag sensor assembly.**

OK

3	Check airbag sensor assembly.

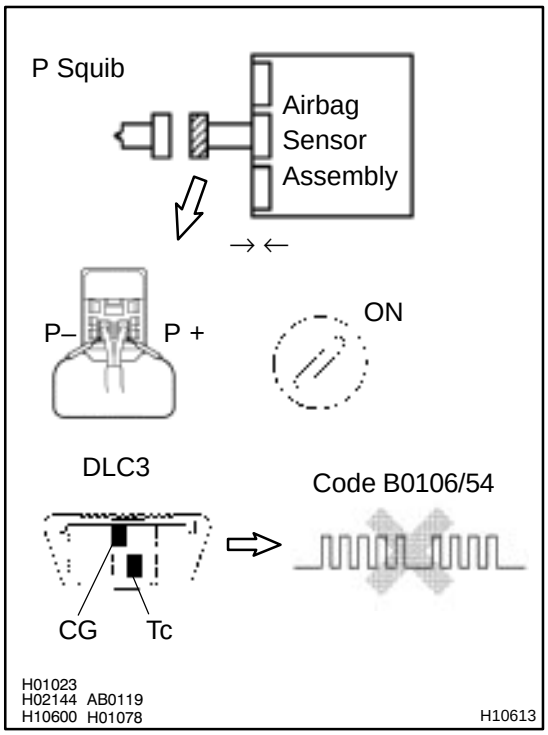

PREPARATION:

(a) Connect the connector to the airbag sensor assembly.

(b) Using a service wire, connect P+ and P– of the connector (on the front passenger airbag assembly side) between the front passenger airbag assembly and the airbag sensor assembly.

(c) Connect negative (–) terminal cable to the battery, and wait at least for 2 seconds.

CHECK:

(a) Turn the ignition switch to ON and wait at least for 20 seconds.

(b) Clear the DTC stored in memory (See page DI–497).

(c) Turn the ignition switch to LOCK, and wait at least for 20 seconds.

(d) Turn the ignition switch to ON, and wait at least for 20 seconds.

(e) Check the DTC (See page DI–497).

OK:

DTC B0106/54 is not output.

HINT:

Codes other than code B0106/54 may be output at this time, but they are not relevant to this check.

NG	Replace airbag sensor assembly.

OK

4	Check P squib.

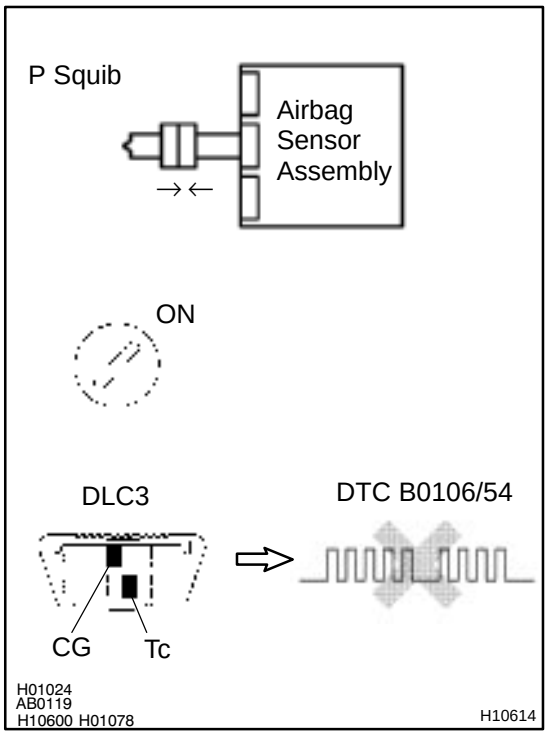

PREPARATION:

(a) Turn the ignition switch to LOCK.
(b) Disconnect negative (–) terminal cable from the battery, and wait at least for 90 seconds.
(c) Connect the front passenger airbag assembly connector.
(d) Connect negative (–) terminal cable to the battery, and wait at least for 2 seconds.

CHECK:

(a) Turn the ignition switch to ON, and wait at least for 20 seconds.
(b) Clear the DTC stored in memory (See page DI–497).
(c) Turn the ignition switch to LOCK, and wait at least for 20 seconds.
(d) Turn the ignition switch to ON, and wait at least for 20 seconds.
(e) Check the DTC (See page DI–497).

OK:

DTC B0106/54 is not output.

HINT:

Codes other than code B0106/54 may be output at this time, but they are not relevant to this check.

NG	Replace front passenger airbag assembly.

OK

From the results of the above inspection, the malfunctioning part can now be considered normal. To make sure of this, use the simulation method to check.

DI6P9–01

DTC	B0107/51	Short in P Squib Circuit (to Ground)

CIRCUIT DESCRIPTION

The P squib circuit consists of the airbag sensor assembly and front passenger airbag assembly.
It causes the SRS to deploy when the SRS deployment conditions are satisfied.
For details of the function of each component, see OPERATION on page RS–2.
DTC B0107/51 is recorded when ground short is detected in the P squib circuit.

DTC No.	DTC Detecting Condition	Trouble Area
B0107/51	• Short circuit in P squib wire harness (to ground) • P squib malfunction • Airbag sensor assembly malfunction	• Front passenger airbag assembly (P squib) • Airbag sensor assembly • Wire harness

WIRING DIAGRAM

See page DI–527.

INSPECTION PROCEDURE

1	**Prepare for inspection (See step 1 on page DI–629).**

2	**Check P squib circuit.**

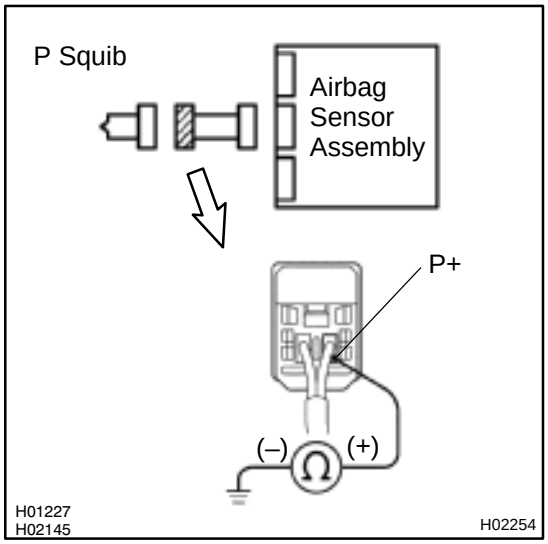

CHECK:

For the connector (on the front passenger airbag assembly side) between the front passenger airbag assembly and the airbag sensor assembly, measure the resistance between P+ and body ground.

OK:

Resistance: 1 MΩ or Higher

NG → **Repair or replace harness or connector between front passenger airbag assembly and airbag sensor assembly.**

OK

3	Check airbag sensor assembly.

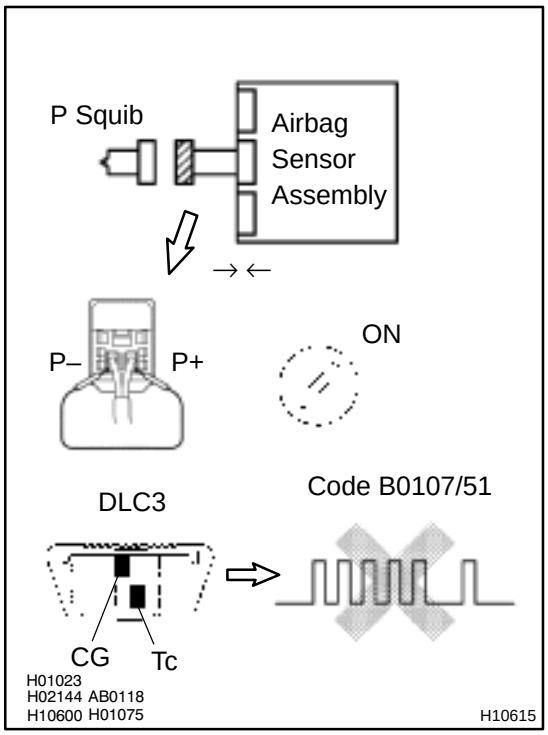

PREPARATION:

(a) Connect the connector to the airbag sensor assembly.

(b) Using a service wire, connect P+ and P– of the connector (on the front passenger airbag assembly side) between the front passenger airbag assembly and the airbag sensor assembly.

(c) Connect negative (–) terminal cable to the battery, and wait at least for 2 seconds.

CHECK:

(a) Turn the ignition switch to ON and wait at least for 20 seconds.

(b) Clear the DTC stored in memory (See step 5 on page DI–497).

(c) Turn the ignition switch to LOCK, and wait at least for 20 seconds.

(d) Turn the ignition switch to ON, and wait at least for 20 seconds.

(e) Check the DTC (See page DI–497).

OK:

DTC B0107/51 is not output.

HINT:

Codes other than code B0107/51 may be output at this time, but they are not relevant to this check.

NG	Replace airbag sensor assembly.

OK

4	**Check P squib.**

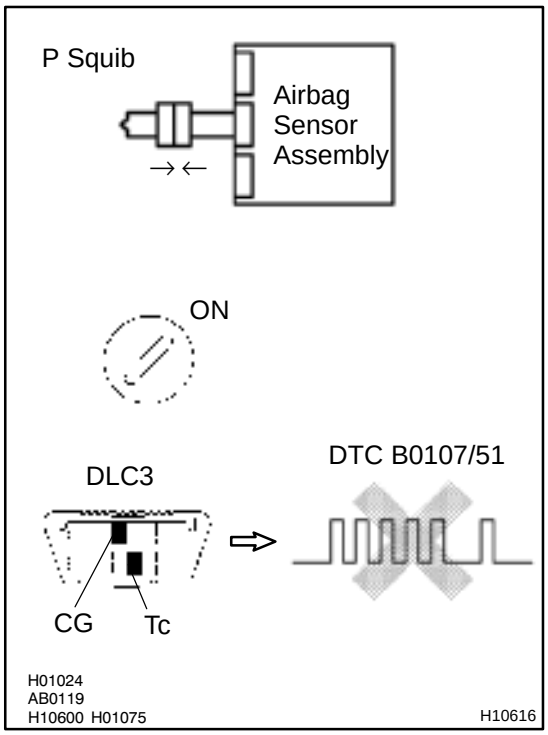

PREPARATION:

(a) Turn the ignition switch to LOCK.
(b) Disconnect negative (–) terminal cable from the battery, and wait at least for 90 seconds.
(c) Connect the front passenger airbag assembly connector.
(d) Connect negative (–) terminal cable to the battery, and wait at least for 2 seconds.

CHECK:

(a) Turn the ignition switch to ON, and wait at least for 20 seconds.
(b) Clear the DTC stored in memory (See step 5 on page DI–497).
(c) Turn the ignition switch to LOCK, and wait at least for 20 seconds.
(d) Turn the ignition switch to ON, and wait at least for 20 seconds.
(e) Check the DTC (See page DI–497).

OK:

DTC B0107/51 is not output.

HINT:
Codes other than code B0107/51 may be output at this time, but they are not relevant to this check.

NG	**Replace front passenger airbag assembly.**

OK

From the results of the above inspection, the malfunctioning part can now be considered normal. To make sure of this, use the simulation method to check. If the malfunctioning part can not be detected by the simulation method, replace all SRS components including the wire harness.

DI6PA–01

DTC	B0108/52	Short in P Squib Circuit (to B+)

CIRCUIT DESCRIPTION

The P squib circuit consists of the airbag sensor assembly and front passenger airbag assembly.
It causes the SRS to deploy when the SRS deployment conditions are satisfied.
For details of the function of each component, see OPERATION on page RS–2.
DTC B0108/52 is recorded when a B+ short is detected in the P squib circuit.

DTC No.	DTC Detecting Condition	Trouble Area
B0108/52	• Short circuit in P squib wire harness (to B+) • P squib malfunction • Airbag sensor assembly malfunction	• Front passenger airbag assembly (P squib) • Airbag sensor assembly • Wire harness

WIRING DIAGRAM

See page DI–527.

INSPECTION PROCEDURE

1	**Prepare for inspection (See step 1 on page DI–629).**

2	**Check P squib circuit.**

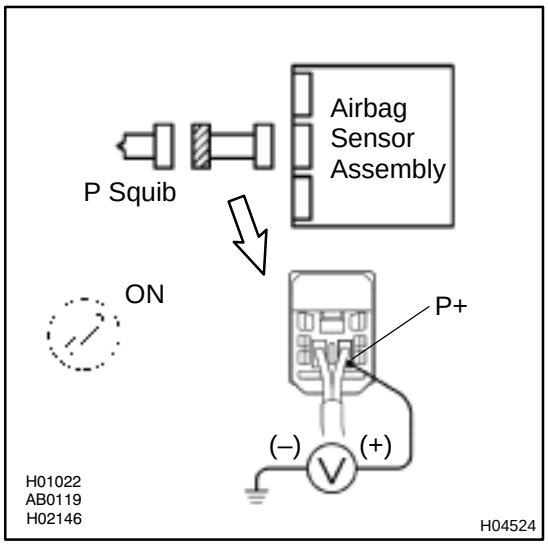

CHECK:

(a) Turn the ignition switch to ON.

(b) For the connector (on the front passenger airbag assembly side) between the front passenger airbag assembly and the airbag sensor assembly, measure the voltage between the P+ and body ground.

OK:

Voltage: 0 V

NG → **Repair or replace harness or connector between front passenger airbag assembly and airbag sensor assembly.**

OK

3	Check airbag sensor assembly.

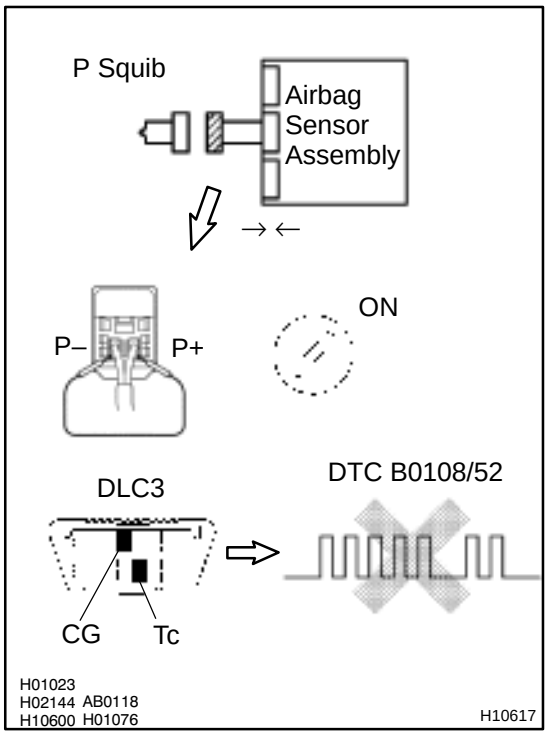

PREPARATION:

(a) Connect the connector to the airbag sensor assembly.

(b) Using a service wire, connect P+ and P– of the connector (on the front passenger airbag assembly side) between the front passenger airbag assembly and the airbag sensor assembly.

(c) Connect negative (–) terminal cable to the battery, and wait at least for 2 seconds.

CHECK:

(a) Turn the ignition switch to ON and wait at least for 20 seconds.

(b) Clear the DTC stored in memory (See step 5 on page DI–497).

(c) Turn the ignition switch to LOCK, and wait at least for 20 seconds.

(d) Turn the ignition switch to ON, and wait at least for 20 seconds.

(e) Check the DTC (See page DI–497).

OK:

DTC B0108/52 is not output.

HINT:

Codes other than code B0108/52 may be output at this time, but they are not relevant to this check.

NG	Replace airbag sensor assembly.

OK

4	Check P squib.

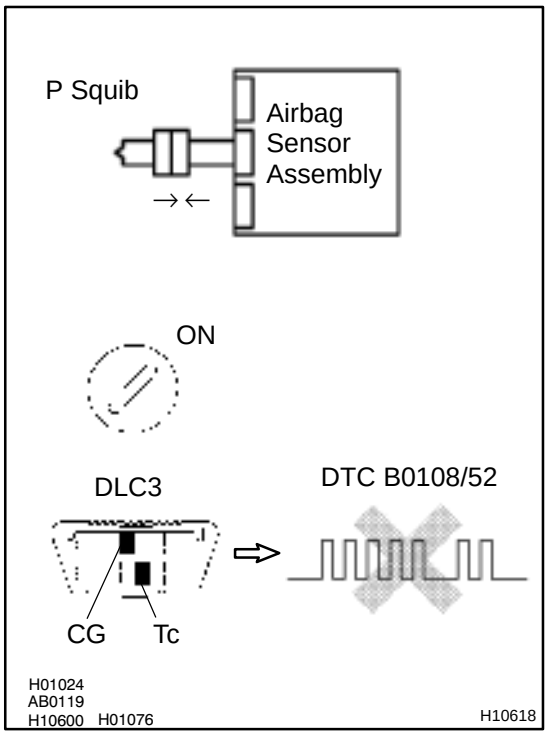

PREPARATION:

(a) Turn the ignition switch to LOCK.
(b) Disconnect negative (–) terminal cable from the battery, and wait at least for 90 seconds.
(c) Connect the front passenger airbag assembly connector.
(d) Connect negative (–) terminal cable to the battery, and wait at least for 2 seconds.

CHECK:

(a) Turn the ignition switch to ON, and wait at least for 20 seconds.
(b) Clear the DTC stored in memory (See step 5 on page DI–497).
(c) Turn the ignition switch to LOCK, and wait at least for 20 seconds.
(d) Turn the ignition switch to ON, and wait at least for 20 seconds.
(e) Check the DTC (See page DI–497).

OK:

DTC B0108/52 is not output.

HINT:
Codes other than code B0108/52 may be output at this time, but they are not relevant to this check.

NG	Replace front passenger airbag assembly.

OK

From the results of the above inspection, the malfunctioning part can now be considered normal. To make sure of this, use the simulation method to check. If the malfunctioning part can not be detected by the simulation method, replace all SRS components including the wire harness.

DI6PB–04

DTC	B0110/43	Short in Side Squib (RH) Circuit

CIRCUIT DESCRIPTION

The side squib (RH) circuit consists of the airbag sensor assembly and side airbag assembly (RH).
It causes the SRS to deploy when the SRS deployment conditions are satisfied.
For details of the function of each component, see OPERATION on page RS–2.
DTC B0110/43 is recorded when a short is detected in the side squib (RH) circuit.

DTC No.	DTC Detecting Condition	Trouble Area
B0110/43	• Short circuit between FR+ wire harness and FR– wire harness of squib • Side squib (RH) malfunction • Airbag sensor assembly malfunction	• Side airbag assembly (RH) • Airbag sensor assembly • Wire harness

WIRING DIAGRAM

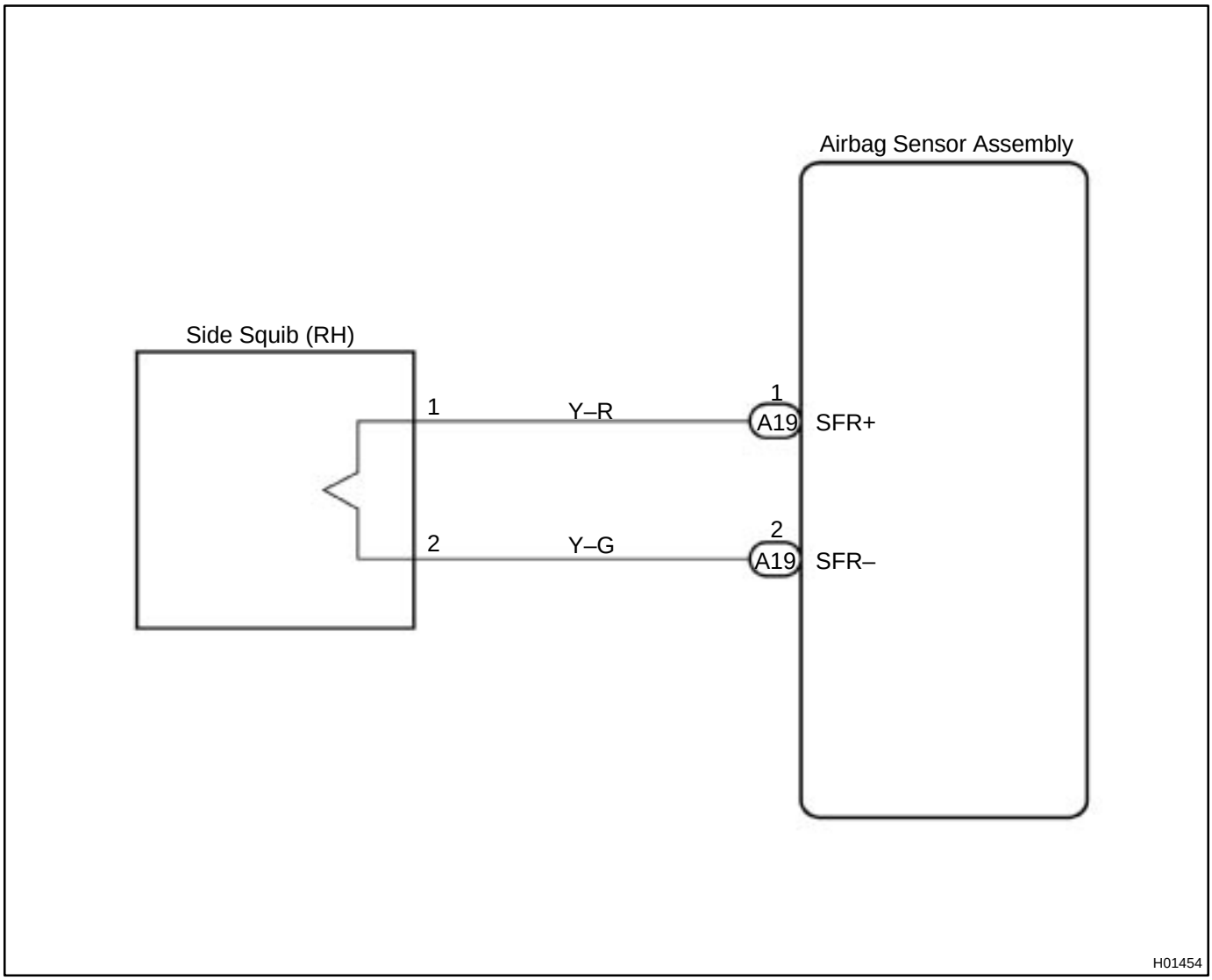

INSPECTION PROCEDURE

1	**Prepare for inspection (See step 1 on page DI–629).**

2	**Check side squib (RH) circuit.**

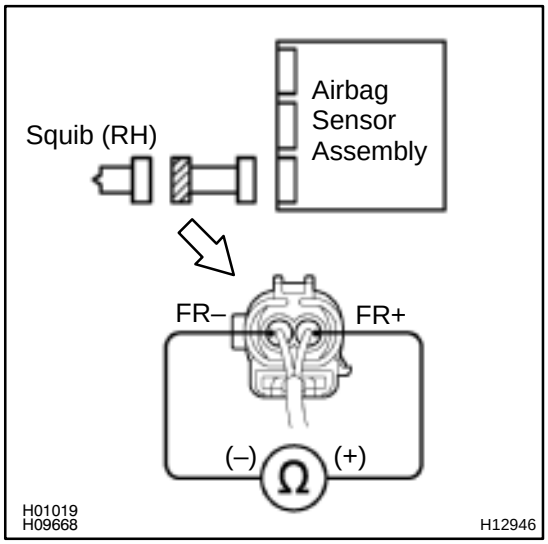

PREPARATION:

Release the airbag activation prevention mechanism of the connector (on the airbag sensor assembly side) between the airbag sensor assembly and the side airbag assembly (RH) (See page DI–497).

CHECK:

For the connector (on the side airbag assembly side) between the side airbag assembly (RH) and the airbag sensor assembly, measure the resistance between FR+ and FR–.

OK:

Resistance: 1 MΩ or Higher

NG → **Repair or replace harness or connector between side airbag assembly (RH) and airbag sensor assembly.**

OK

3	Check airbag sensor assembly.

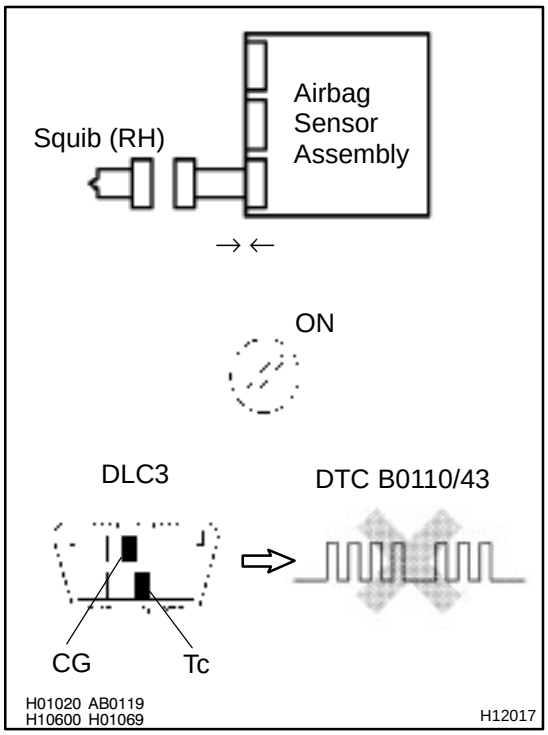

PREPARATION:

(a) Connect the connector to the airbag sensor assembly.
(b) Connect negative (–) terminal cable to the battery, and wait at least for 2 seconds.

CHECK:

(a) Turn the ignition switch to ON and wait at least for 20 seconds.
(b) Clear the DTC stored in memory (See page DI–497).
(c) Turn the ignition switch to LOCK, and wait at least for 20 seconds.
(d) Turn the ignition switch or ON, and wait at least for 20 seconds.
(e) Check the DTC (See page DI–497).

OK:

DTC B0110/43 is not output.

HINT:
Codes other than code B0110/43 may be output at this time, but they are not relevant to this check.

NG → **Replace airbag sensor assembly.**

OK

4	Check side squib (RH).

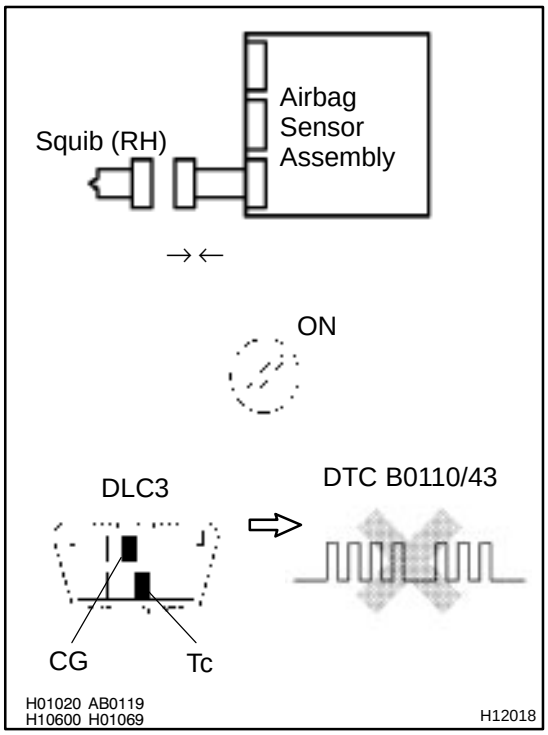

PREPARATION:

(a) Turn the ignition switch to LOCK.
(b) Disconnect negative (–) terminal cable from the battery, and wait at least for 90 seconds.
(c) Connect the side airbag assembly (RH) connector.
(d) Connect negative (–) terminal cable to the battery, and wait at least for 2 seconds.

CHECK:

(a) Turn the ignition switch to LOOK, and wait at least for 20 second.
(b) Turn the ignition switch to ON, and wait at least for 20 seconds.
(c) Clear the DTC stored in memory (See page DI–497).
(d) Turn the ignition switch to LOCK, and wait at least for 20 seconds.
(e) Turn the ignition switch to ON, and wait at least for 20 seconds.
(f) Check the DTC (See page DI–497).

OK:

DTC B0110/43 is not output.

HINT:
Codes other than code B0110/43 may be output at this time, but they are not relevant to this check.

NG → **Replace side airbag assembly (RH).**

OK

From the results of the above inspection, the malfunctioning part can now be considered normal. To make sure of this, use the simulation method to check.

DI6PC–01

DTC	B0111/44	Open in Side Squib (RH) Circuit

CIRCUIT DESCRIPTION

The side squib (RH) circuit consists of the airbag sensor assembly and side airbag assembly (RH).
It causes the SRS to deploy when the SRS deployment conditions are satisfied.
For details of the function of each component, see OPERATION on page RS–2.
DTC B0111/44 is recorded when an open is detected in the side squib (RH) circuit.

DTC No.	DTC Detecting Condition	Trouble Area
B0111/44	• Open circuit in FR+ wire harness or FR– wire harness of squib • Side squib (RH) malfunction • Airbag sensor assembly malfunction	• Side airbag assembly (RH) • Airbag sensor assembly • Wire harness

WIRING DIAGRAM

See page DI–540.

INSPECTION PROCEDURE

1	**Prepare for inspection (See step 1 on page DI–629).**

2	**Check front side squib (RH) circuit.**

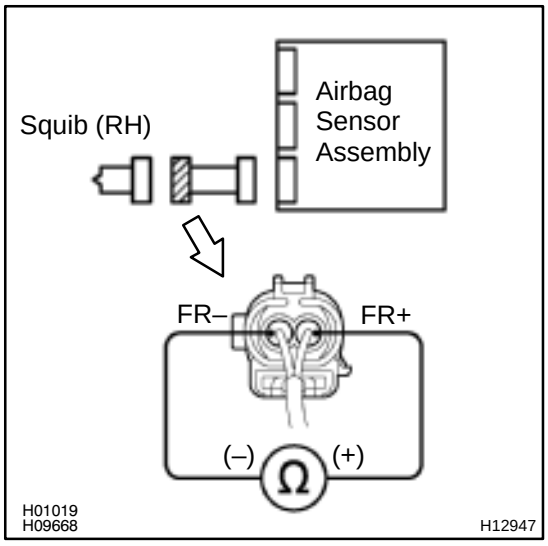

CHECK:

For the connector (on the front side airbag assembly side) between the front side airbag assembly (RH) and the airbag sensor assembly, measure the resistance between FR+ and FR–.

OK:

Resistance: Below 1 Ω

NG → **Repair or replace harness or connector between side airbag assembly (RH) and airbag sensor assembly.**

OK

3	Check airbag sensor assembly.

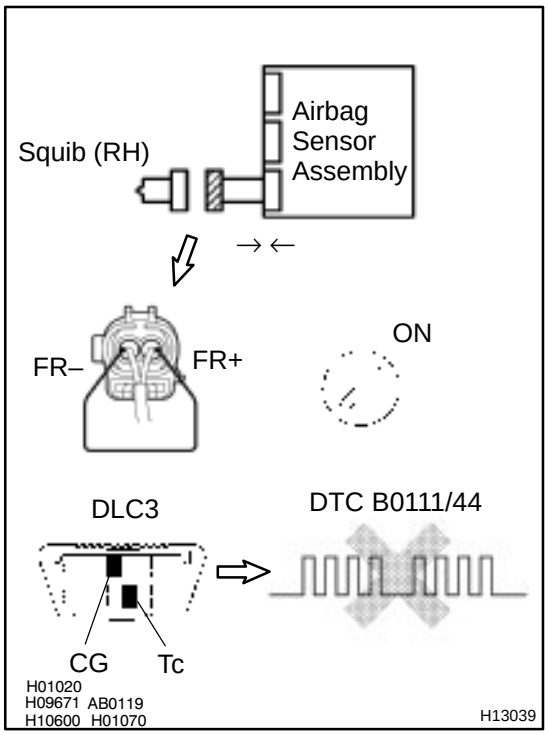

PREPARATION:

(a) Connect the connector to the airbag sensor assembly.
(b) Using a service wire, connect FR+ and FR– of the connector (on the side airbag assembly side) between the side airbag assembly (RH) and the airbag sensor assembly.
(c) Connect negative (–) terminal cable to the battery, and wait at least for 2 seconds.

CHECK:

(a) Turn the ignition switch to ON and wait at least for 20 seconds.
(b) Clear the DTC stored in memory (See page DI–497).
(c) Turn the ignition switch to LOCK, and wait at least for 20 seconds.
(d) Turn the ignition switch to ON, and wait at least for 20 seconds.
(e) Check the DTC (See page DI–497).

OK:

DTC B0111/44 is not output.

HINT:
Codes other than code B0111/44 may be output at this time, but they are not relevant to this check.

NG	Replace airbag sensor assembly.

OK

4	Check side squib (RH).

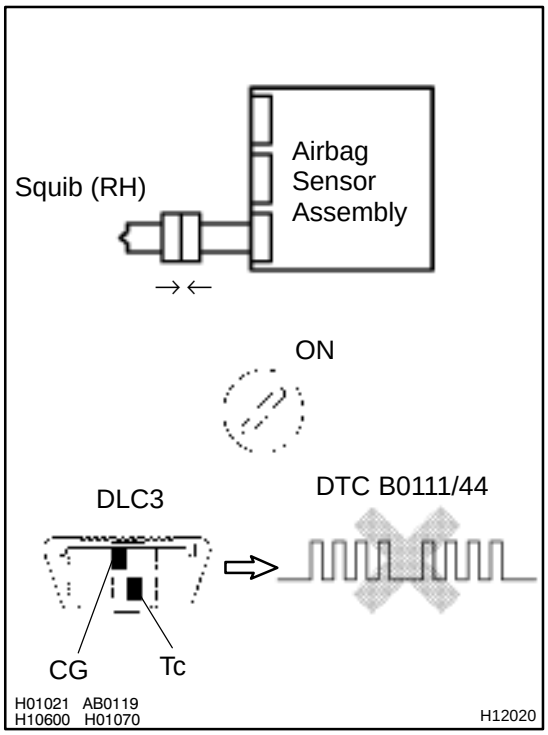

PREPARATION:

(a) Turn the ignition switch to LOCK.
(b) Disconnect negative (–) terminal cable from the battery, and wait at least for 90 seconds.
(c) Connect the front side airbag assembly (RH) connector.
(d) Connect negative (–) terminal cable to the battery, and wait at least for 2 seconds.

CHECK:

(a) Turn the ignition switch to ON, and wait at least for 20 seconds.
(b) Clear the DTC stored in memory (See page DI–497).
(c) Turn the ignition switch to LOCK, and wait at least for 20 seconds.
(d) Turn the ignition switch to or ON, and wait at least for 20 seconds.
(e) Check the DTC (See page DI–497).

OK:

DTC B0111/44 is not output.

HINT:

Codes other than code B0111/44 may be output at this time, but they are not relevant to this check.

NG	Replace side airbag assembly (RH).

OK

From the results of the above inspection, the malfunctioning part can now be considered normal. To make sure of this, use the simulation method to check.

DTC	B0112/41	Short in Side Squib (RH) Circuit (to Ground)

CIRCUIT DESCRIPTION

The side squib (RH) circuit consists of the airbag sensor assembly and side airbag assembly (RH).
It causes the SRS to deploy when the SRS deployment conditions are satisfied.
For details of the function of each component, see OPERATION on page RS–2.
DTC B0112/41 is recorded when ground short is detected in the side squib (RH) circuit.

DTC No.	DTC Detecting Condition	Trouble Area
B0112/41	• Short circuit in side squib (RH) wire harness (to ground) • Side squib (RH) malfunction • Airbag sensor assembly malfunction	• Side airbag assembly (RH) • Airbag sensor assembly • Wire harness

WIRING DIAGRAM

See page DI–540.

INSPECTION PROCEDURE

1	**Prepare for inspection (See step 1 on page DI–629).**

2	**Check side squib (RH) circuit.**

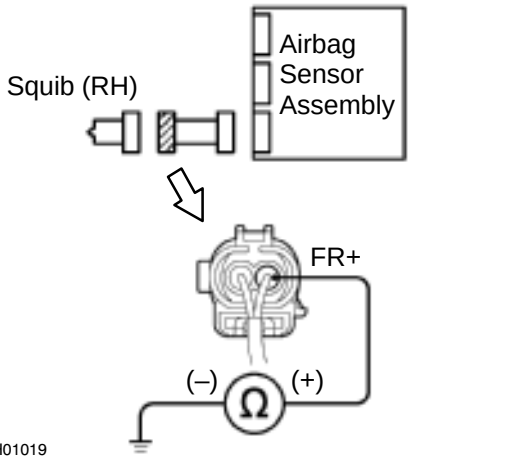

CHECK:

For the connector (on the side airbag assembly side) between the side airbag assembly (RH) and the airbag sensor assembly, measure the resistance between FR+ and body ground.

OK:

Resistance: 1 MΩ or Higher

NG → **Repair or replace harness or connector between side airbag assembly (RH) and airbag sensor assembly.**

OK

3	Check airbag sensor assembly.

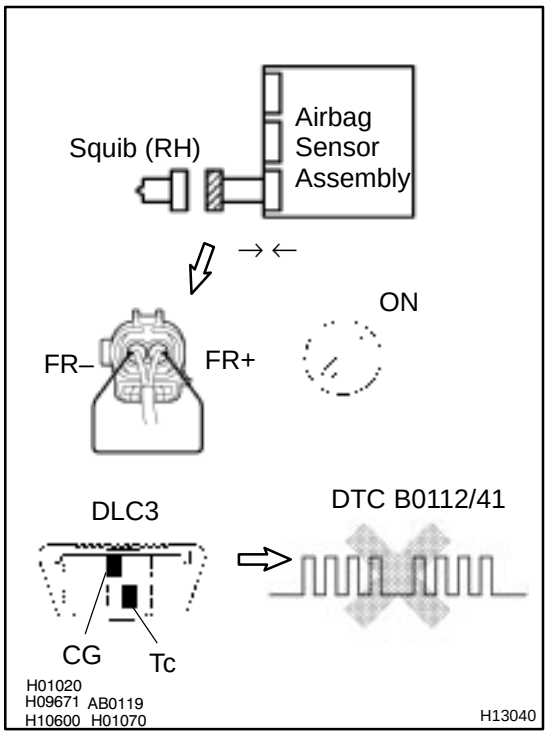

PREPARATION:

(a) Connect the connector to the airbag sensor assembly.

(b) Using a service wire, connect FR+ and FR– of the connector (on the side airbag assembly side) between the side airbag assembly (RH) and the airbag sensor assembly.

(c) Connect negative (–) terminal cable to the battery, and wait at least for 2 seconds.

CHECK:

(a) Turn the ignition switch to ON and wait at least for 20 seconds.

(b) Clear the DTC stored in memory (See step 5 on page DI–497).

(c) Turn the ignition switch to LOCK, and wait at least for 20 seconds.

(d) Turn the ignition switch to ON, and wait at least for 20 seconds.

(e) Check the DTC (See page DI–497).

OK:

DTC B0112/41 is not output.

HINT:

Codes other than code B0112/41 may be output at this time, but they are not relevant to this check.

NG	Replace airbag sensor assembly.

OK

4	Check side squib (RH).

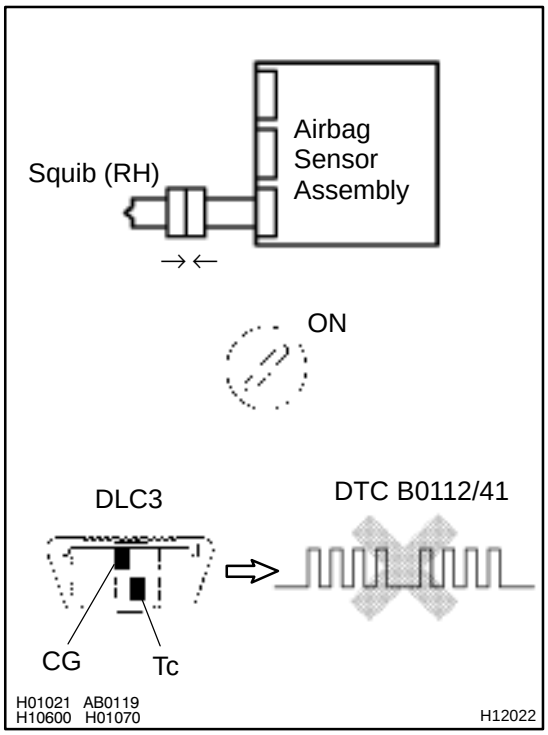

PREPARATION:

(a) Turn the ignition switch to LOCK.
(b) Disconnect negative (–) terminal cable from the battery, and wait at least for 90 seconds.
(c) Connect the side airbag assembly (RH) connector.
(d) Connect negative (–) terminal cable to the battery, and wait at least for 2 seconds.

CHECK:

(a) Turn the ignition switch to ON, and wait at least for 20 seconds.
(b) Clear the DTC stored in memory (See step 5 on page DI–497).
(c) Turn the ignition switch to LOCK, and wait at least for 20 seconds.
(d) Turn the ignition switch to ON, and wait at least for 20 seconds.
(e) Check the DTC (See page DI–497).

OK:

DTC B0112/41 is not output.

HINT:
Codes other than code B0112/41 may be output at this time, but they are not relevant to this check.

NG	Replace side airbag assembly (RH).

OK

From the results of the above inspection, the malfunctioning part can now be considered normal. To make sure of this, use the simulation method to check. If the malfunctioning part can not be detected by the simulation method, replace all SRS components including the wire harness.

DI6PE–01

DTC	B0113/42	Short in Side Squib (RH) Circuit (to B+)

CIRCUIT DESCRIPTION

The side squib (RH) circuit consists of the airbag sensor assembly and side airbag assembly (RH).
It causes the SRS to deploy when the SRS deployment conditions are satisfied.
For details of the function of each component, see OPERATION on page RS–2.
DTC B0113/42 is recorded when a B+ short is detected in the side squib (RH) circuit.

DTC No.	DTC Detecting Condition	Trouble Area
B0113/42	• Short circuit in side squib (RH) wire harness (to B+) • Side squib (RH) malfunction • Airbag sensor assembly malfunction	• Side airbag assembly (RH) • Airbag sensor assembly • Wire harness

WIRING DIAGRAM

See page DI–540.

INSPECTION PROCEDURE

1	**Prepare for inspection (See step 1 on page DI–497).**

2	**Check side squib (RH) circuit.**

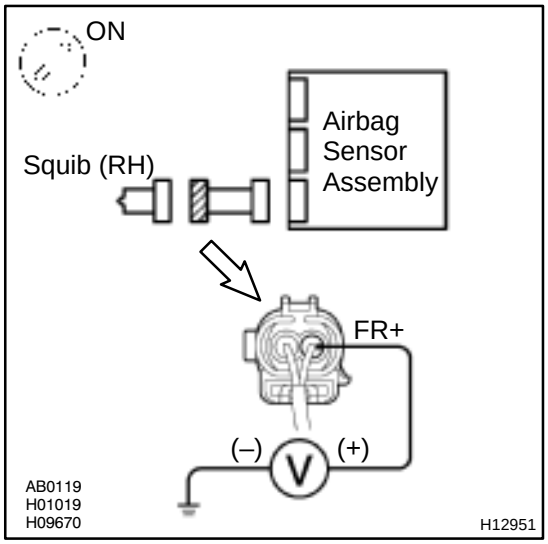

CHECK:

(a) Turn the ignition switch to ON.

(b) For the connector (on the airbag sensor assembly side) between the side airbag assembly (RH) and the airbag sensor assembly, measure the voltage between FR+ and body ground.

OK:

Voltage: 0 V

NG → **Repair or replace harness or connector between side airbag assembly (RH) and airbag sensor assembly.**

OK

3	Check airbag sensor assembly.

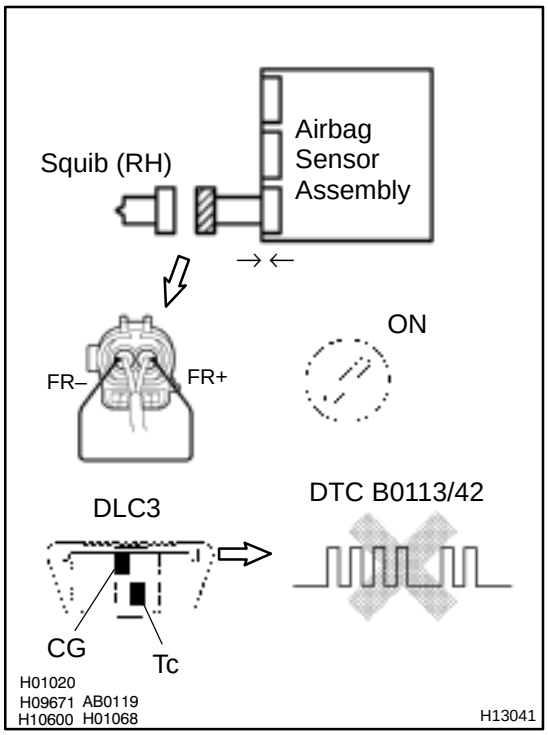

PREPARATION:

(a) Connect the connector to the airbag sensor assembly.

(b) Using a service wire, connect FR+ and FR– of the connector (on the front side airbag assembly side) between the front side airbag assembly (RH) and the airbag sensor assembly.

(c) Connect negative (–) terminal cable to the battery, and wait at least for 2 seconds.

CHECK:

(a) Turn the ignition switch to ON and wait at least for 20 seconds.

(b) Clear the DTC stored in memory (See step 5 on page DI–497).

(c) Turn the ignition switch to LOCK, and wait at least for 20 seconds.

(d) Turn the ignition switch to ON, and wait at least for 20 seconds.

(e) Check the DTC (See page DI–497).

OK:

DTC B0113/42 is not output.

HINT:

Codes other than code B0113/42 may be output at this time, but they are not relevant to this check.

NG	Replace airbag sensor assembly.

OK

4	Check side squib (RH).

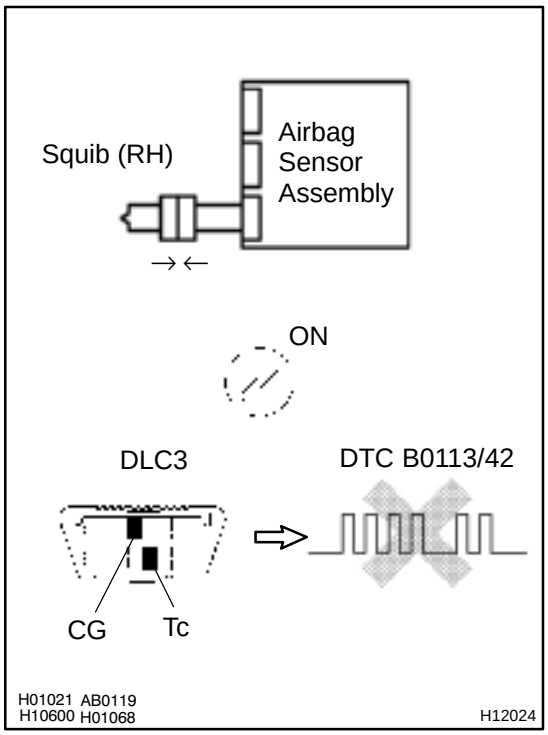

PREPARATION:

(a) Turn the ignition switch to LOCK.
(b) Disconnect negative (–) terminal cable from the battery, and wait at least for 90 seconds.
(c) Connect the front side airbag assembly (RH) connector.
(d) Connect negative (–) terminal cable to the battery, and wait at least for 2 seconds.

CHECK:

(a) Turn the ignition switch to ON, and wait at least for 20 seconds.
(b) Clear the DTC stored in memory (See step 5 on page DI–497).
(c) Turn the ignition switch to LOCK, and wait at least for 20 seconds.
(d) Turn the ignition switch to ON, and wait at least for 20 seconds.
(e) Check the DTC (See page DI–497).

OK:

DTC B0113/42 is not output.

HINT:
Codes other than code B0113/42 may be output at this time, but they are not relevant to this check.

NG	Replace side airbag assembly (RH).

OK

From the results of the above inspection, the malfunctioning part can now be considered normal. To make sure of this, use the simulation method to check. If the malfunctioning part can not be detected by the simulation method, replace all SRS components including the wire harness.

DI6PF–04

DTC	B0115/47	Short in Side Squib (LH) Circuit

CIRCUIT DESCRIPTION

The side squib (LH) circuit consists of the airbag sensor assembly and side airbag assembly (LH).
It causes the SRS to deploy when the SRS deployment conditions are satisfied.
For details of the function of each component, see OPERATION on page RS–2.
DTC B0115/47 is recorded when a short is detected in the side squib (LH) circuit.

DTC No.	DTC Detecting Condition	Trouble Area
B0115/47	• Short circuit between FL+ wire harness and FL– wire harness of squib • Side squib (LH) malfunction • Airbag sensor assembly malfunction	• Side airbag assembly (LH) • Airbag sensor assembly • Wire harness

WIRING DIAGRAM

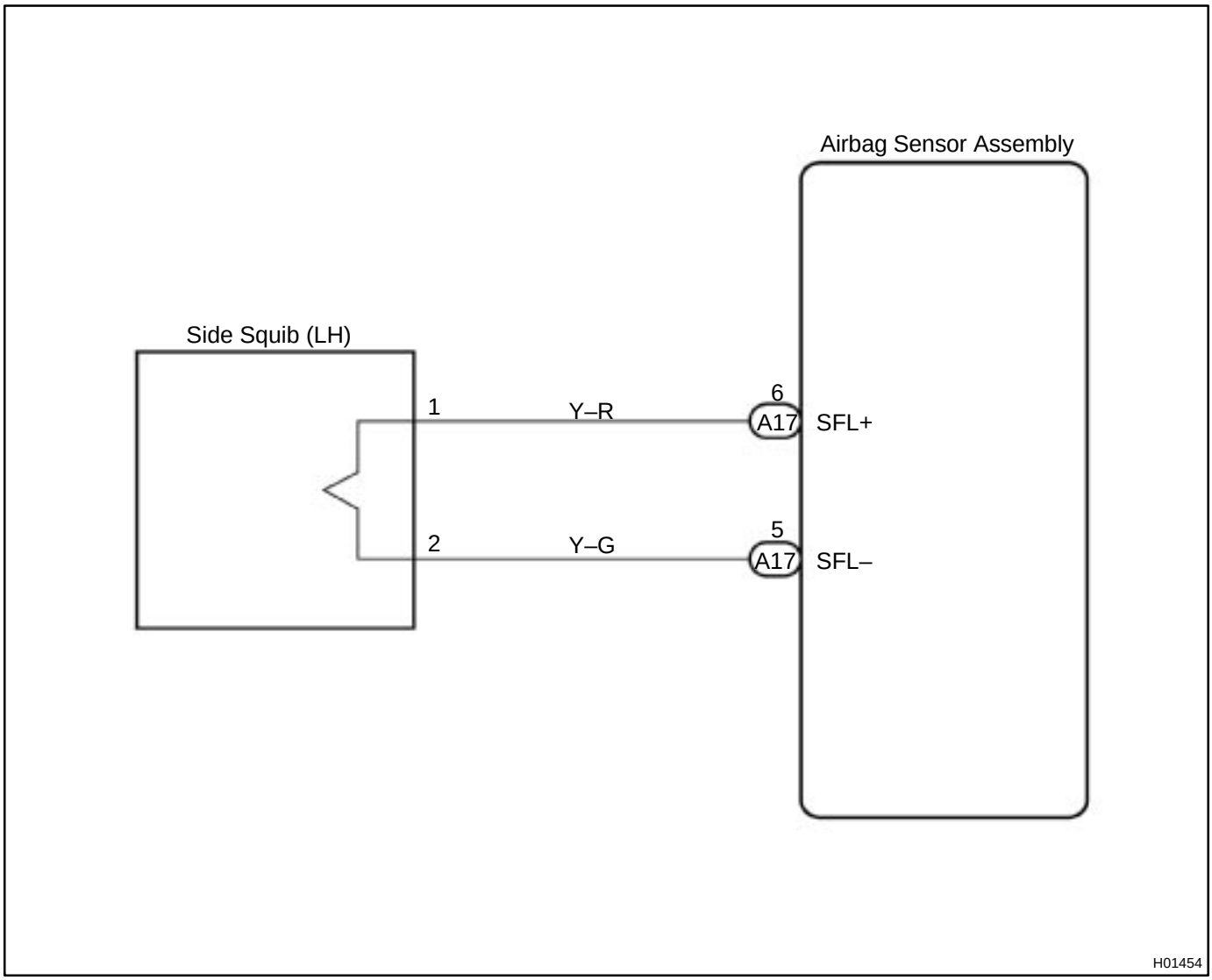

INSPECTION PROCEDURE

1	**Prepare for inspection (See step 1 on page DI–629).**

2	**Check side squib (LH) circuit.**

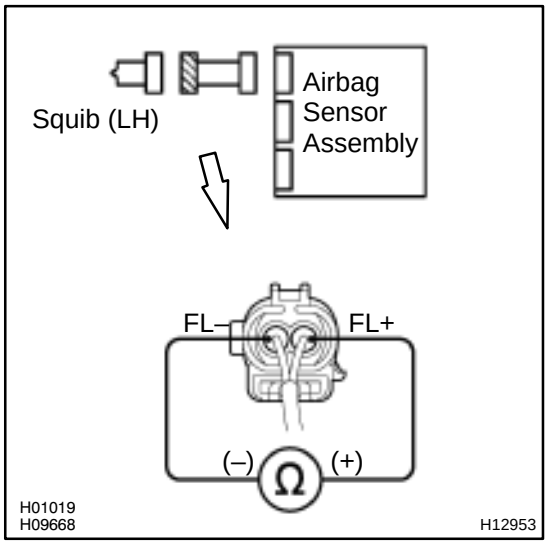

PREPARATION:

Release the airbag activation prevention mechanism of the connector (on the airbag sensor assembly side) between the airbag sensor assembly and the side airbag assembly (LH) (See page DI–497).

CHECK:

For the connector (on the side airbag assembly side) between the side airbag assembly (LH) and the airbag sensor assembly, measure the resistance between FL+ and FL–.

OK:

Resistance: 1 MΩ or Higher

NG → **Repair or replace harness or connector between side airbag assembly (LH) and airbag sensor assembly.**

OK

3	Check airbag sensor assembly.

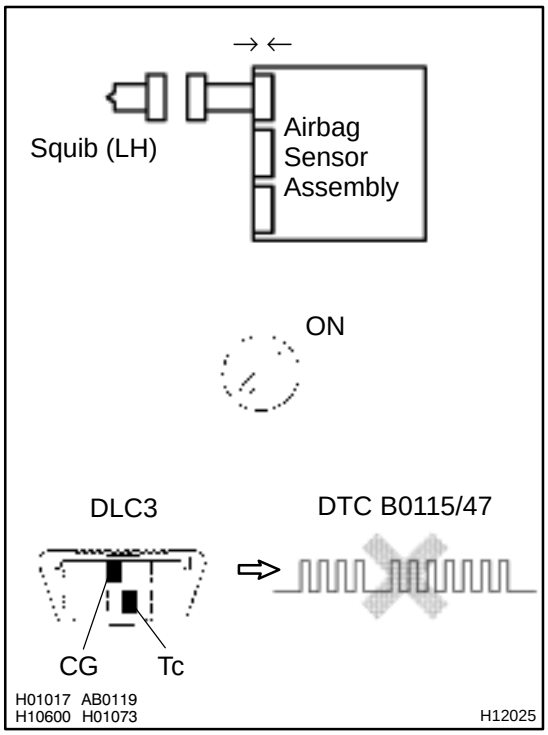

PREPARATION:

(a) Connect the connector to the airbag sensor assembly.
(b) Connect negative (–) terminal cable to the battery, and wait at least for 2 seconds.

CHECK:

(a) Turn the ignition switch to ON and wait at least for 20 seconds.
(b) Clear the DTC stored in memory (See page DI–497).
(c) Turn the ignition switch to LOCK, and wait at least for 20 seconds.
(d) Turn the ignition switch or ON, and wait at least for 20 seconds.
(e) Check the DTC (See page DI–497).

OK:

DTC B0115/47 is not output.

HINT:
Codes other than code B0115/47 may be output at this time, but they are not relevant to this check.

NG → **Replace airbag sensor assembly.**

OK

4	Check side squib (LH).

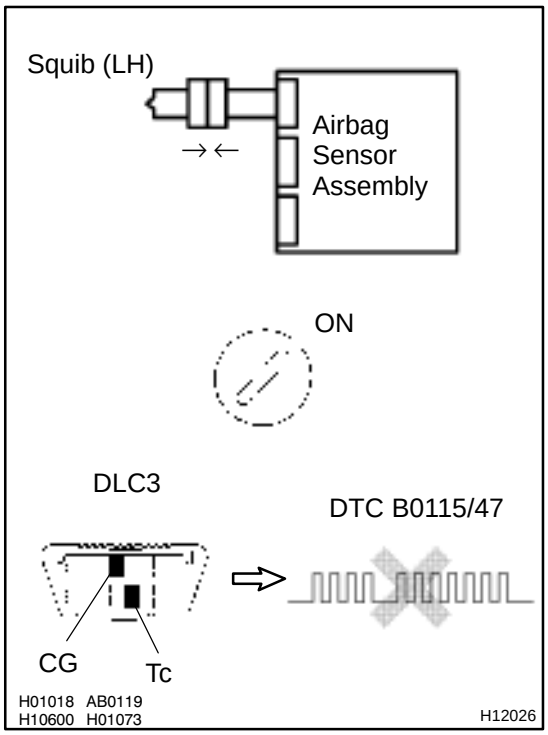

PREPARATION:

(a) Turn the ignition switch to LOCK.
(b) Disconnect negative (–) terminal cable from the battery, and wait at least for 90 seconds.
(c) Connect the front side airbag assembly (LH) connector.
(d) Connect negative (–) terminal cable to the battery, and wait at least for 2 seconds.

CHECK:

(a) Turn the ignition switch to LOOK, and wait at least for 20 second.
(b) Turn the ignition switch to ON, and wait at least for 20 seconds.
(c) Clear the DTC stored in memory (See page DI–497).
(d) Turn the ignition switch to LOCK, and wait at least for 20 seconds.
(e) Turn the ignition switch to ON, and wait at least for 20 seconds.
(f) Check the DTC (See page DI–497).

OK:

DTC B0115/47 is not output.

HINT:

Codes other than code B0115/47 may be output at this time, but they are not relevant to this check.

NG → **Replace side airbag assembly (LH).**

OK

From the results of the above inspection, the malfunctioning part can now be considered normal. To make sure of this, use the simulation method to check.

DTC	B0116/48	Open in Side Squib (LH) Circuit

CIRCUIT DESCRIPTION

The side squib (LH) circuit consists of the airbag sensor assembly and side airbag assembly (LH).
It causes the SRS to deploy when the SRS deployment conditions are satisfied.
For details of the function of each component, see OPERATION on page RS–2.
DTC B0116/48 is recorded when an open is detected in the side squib (LH) circuit.

DTC No.	DTC Detecting Condition	Trouble Area
B0116/48	• Open circuit in FL+ wire harness or FL– wire harness of squib • Side squib (LH) malfunction • Airbag sensor assembly malfunction	• Side airbag assembly (LH) • Airbag sensor assembly • Wire harness

WIRING DIAGRAM

See page DI–553.

INSPECTION PROCEDURE

1	**Prepare for inspection. (See step 1 on page DI–629)**

2	**Check side squib (LH) circuit.**

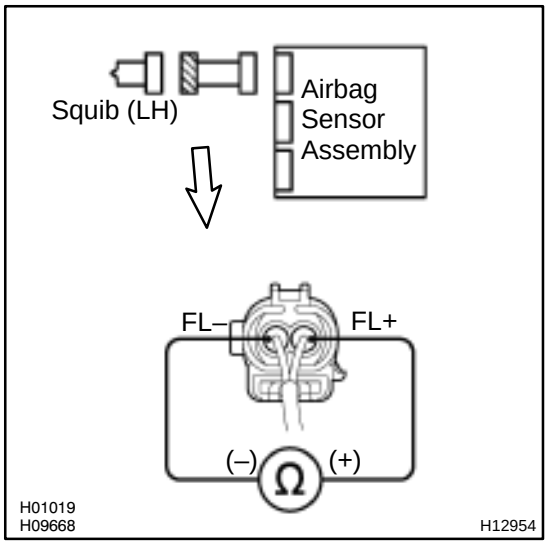

CHECK:

For the connector (on the front side airbag assembly side) between the front side airbag assembly (LH) and the airbag sensor assembly, measure the resistance between FL+ and FL–.

OK:

Resistance: Below 1 Ω

NG → **Repair or replace harness or connector between side airbag assembly (LH) and airbag sensor assembly.**

OK

3	Check airbag sensor assembly.

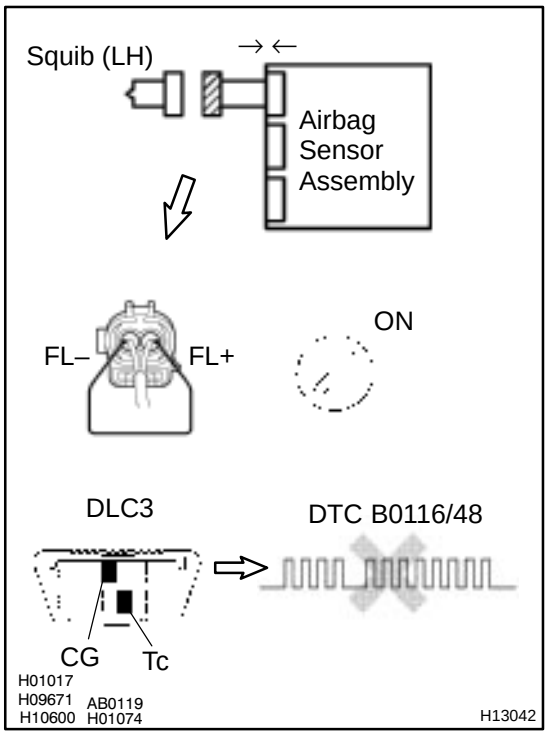

PREPARATION:

(a) Connect the connector to the airbag sensor assembly.
(b) Using a service wire, connect FL+ and FL– of the connector (on the side airbag assembly side) between the side airbag assembly (LH) and the airbag sensor assembly.
(c) Connect negative (–) terminal cable to the battery, and wait at least 2 seconds.

CHECK:

(a) Turn the ignition switch to ON and wait at least for 20 seconds.
(b) Clear the DTC stored in memory (See page DI–497).
(c) Turn the ignition switch to LOCK, and wait at least for 20 seconds.
(d) Turn the ignition switch to ON, and wait at least for 20 seconds.
(e) Check the DTC (See page DI–497).

OK:

DTC B0116/48 is not output.

HINT:

Codes other than code B0116/48 may be output at this time, but they are not relevant to this check.

NG	Replace side airbag sensor assembly.

OK

4	Check side squib (LH).

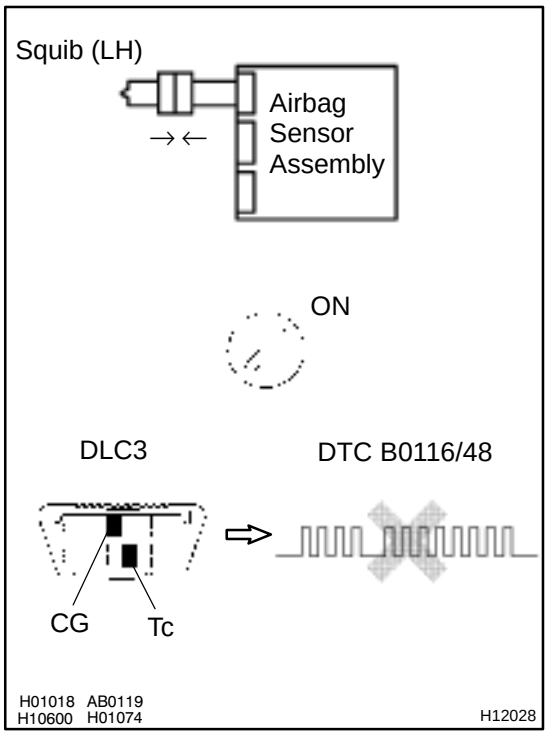

PREPARATION:

(a) Turn the ignition switch to LOCK.
(b) Disconnect negative (–) terminal cable from the battery, and wait at least for 90 seconds.
(c) Connect the side airbag assembly (LH) connector.
(d) Connect negative (–) terminal cable to the battery, and wait at least for 2 seconds.

CHECK:

(a) Turn the ignition switch to ON, and wait at least for 20 seconds.
(b) Clear the DTC stored in memory (See page DI–497).
(c) Turn the ignition switch to LOCK, and wait at least for 20 seconds.
(d) Turn the ignition switch to ON, and wait at least for 20 seconds.
(e) Check the DTC (See page DI–497).

OK:

DTC B0116/48 is not output.

HINT:

Codes other than code B0116/48 may be output at this time, but they are not relevant to this check.

NG	Replace side airbag assembly (LH).

OK

From the results of the above inspection, the malfunctioning part can now be considered normal. To make sure of this, use the simulation method to check.

DTC	B0117/45	Short in Side Squib (LH) Circuit (to Ground)

CIRCUIT DESCRIPTION

The side squib (LH) circuit consists of the airbag sensor assembly and side airbag assembly (LH).
It causes the SRS to deploy when the SRS deployment conditions are satisfied.
For details of the function of each component, see OPERATION on page RS–2.
DTC B0117/45 is recorded when ground short is detected in the side squib (LH) circuit.

DTC No.	DTC Detecting Condition	Trouble Area
B0117/45	• Short circuit in side squib (LH) wire harness (to ground) • Side squib (LH) malfunction • Airbag sensor assembly malfunction	• Side airbag assembly (LH) • Airbag sensor assembly • Wire harness

WIRING DIAGRAM

See page DI–553.

INSPECTION PROCEDURE

1	**Prepare for inspection (See step 1 on page DI–629).**

2	**Check side squib (LH) circuit.**

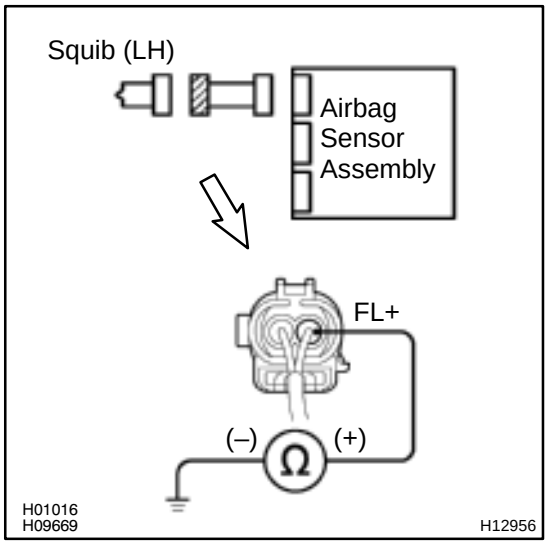

CHECK:

For the connector (on the side airbag assembly side) between the side airbag assembly (LH) and the airbag sensor assembly, measure the resistance between FL+ and body ground.

OK:

Resistance: 1 MΩ or Higher

NG → **Repair or replace harness or connector between side airbag assembly (LH) and airbag sensor assembly.**

OK

3	Check airbag sensor assembly.

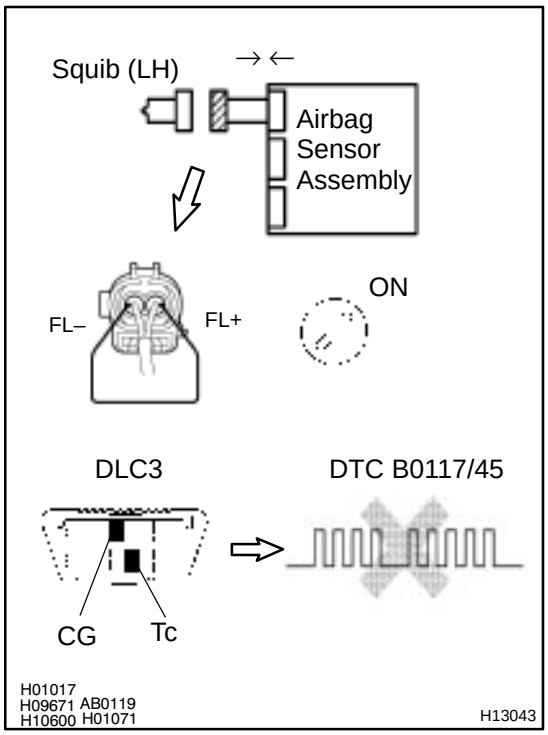

PREPARATION:

(a) Connect the connector to the airbag sensor assembly.
(b) Using a service wire, connect FL+ and FL– of the connector (on the side airbag assembly side) between the side airbag assembly (LH) and the airbag sensor assembly.
(c) Connect negative (–) terminal cable to the battery, and wait at least for 2 seconds.

CHECK:

(a) Turn the ignition switch to ON and wait at least for 20 seconds.
(b) Clear the DTC stored in memory (See step 5 on page DI–497).
(c) Turn the ignition switch to LOCK, and wait at least for 20 seconds.
(d) Turn the ignition switch to ON, and wait at least for 20 seconds.
(e) Check the DTC (See page DI–497).

OK:

DTC B0117/45 is not output.

HINT:
Codes other than code B0117/45 may be output at this time, but they are not relevant to this check.

NG → **Replace airbag sensor assembly.**

OK

4	Check side squib (LH).

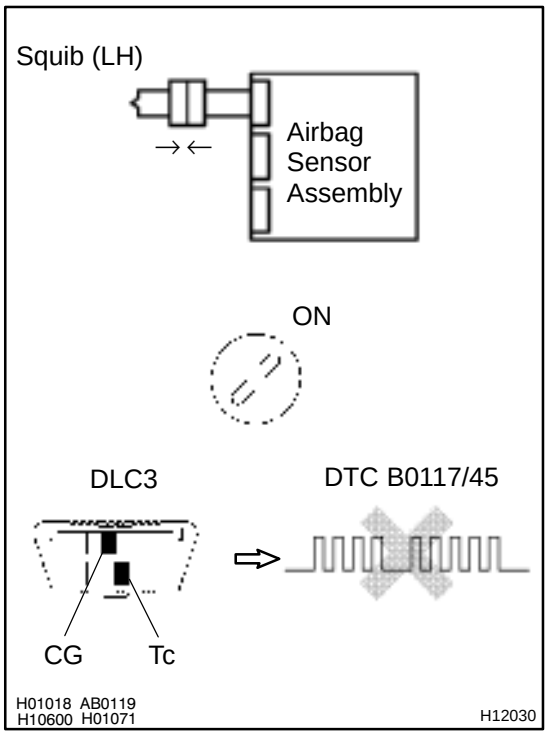

PREPARATION:

(a) Turn the ignition switch to LOCK.
(b) Disconnect negative (–) terminal cable from the battery, and wait at least for 90 seconds.
(c) Connect the front side airbag assembly (LH) connector.
(d) Connect negative (–) terminal cable to the battery, and wait at least for 2 seconds.

CHECK:

(a) Turn the ignition switch to ON, and wait at least for 20 seconds.
(b) Clear the DTC stored in memory (See step 5 on page DI–497).
(c) Turn the ignition switch to LOCK, and wait at least for 20 seconds.
(d) Turn the ignition switch to ON, and wait at least for 20 seconds.
(e) Check the DTC (See page DI–497).

OK:

DTC B0117/45 is not output.

HINT:
Codes other than code B0117/45 may be output at this time, but they are not relevant to this check.

NG → **Replace front side airbag assembly (LH).**

OK

From the results of the above inspection, the malfunctioning part can now be considered normal. To make sure of this, use the simulation method to check. If the malfunctioning part can not be detected by the simulation method, replace all SRS components including the wire harness.

DTC	B0118/46	Short in Side Squib (LH) Circuit (to B+)

CIRCUIT DESCRIPTION

The side squib (LH) circuit consists of the airbag sensor assembly and side airbag assembly (LH).
It causes the SRS to deploy when the SRS deployment conditions are satisfied.
For details of the function of each component, see OPERATION on page RS–2.
DTC B0118/46 is recorded when a B+ short is detected in the side squib (LH) circuit.

DTC No.	DTC Detecting Condition	Trouble Area
B0118/46	• Short circuit in side squib (LH) wire harness (to B+) • Side squib (LH) malfunction • Airbag sensor assembly malfunction	• Side airbag assembly (LH) • Airbag sensor assembly • Wire harness

WIRING DIAGRAM

See page DI–553.

INSPECTION PROCEDURE

1	**Prepare for inspection (See step 1 on page DI–629).**

2	**Check side squib (LH) circuit.**

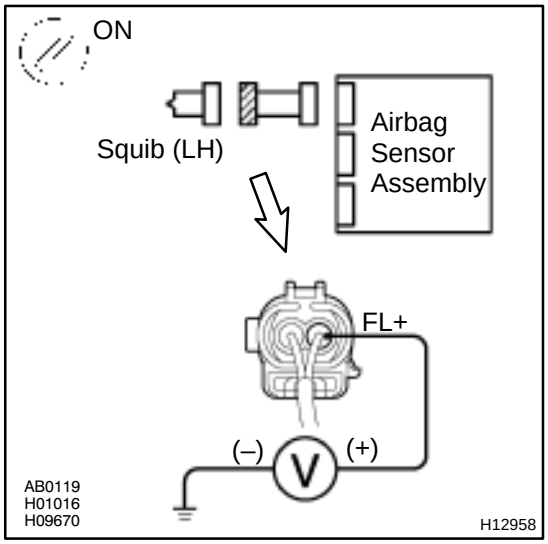

CHECK:

(a) Turn the ignition switch to ON.

(b) For the connector (on the side airbag assembly side) between the side airbag assembly (LH) and the airbag sensor assembly, measure the voltage between FL+ and body ground.

OK:

Voltage: 0 V

NG → **Repair or replace harness or connector between side airbag assembly (LH) and airbag sensor assembly.**

OK

3	Check airbag sensor assembly.

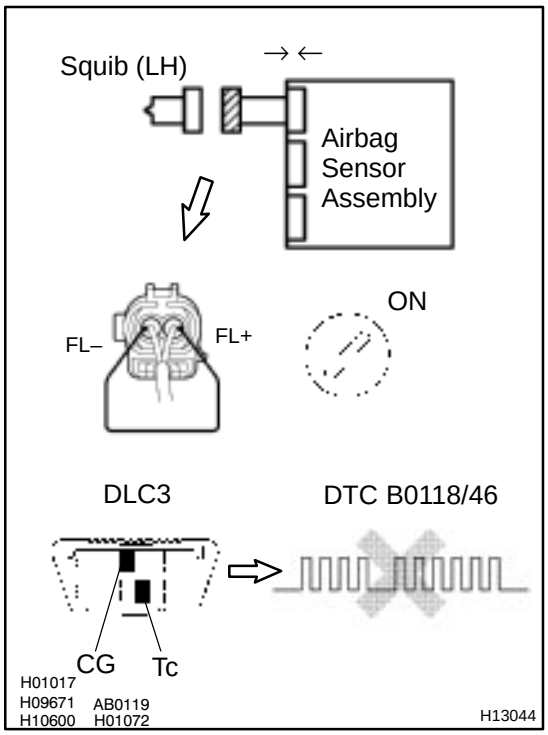

PREPARATION:

(a) Connect the connector to the airbag sensor assembly.
(b) Using a service wire, connect FL+ and FL– of the connector (on the side airbag assembly side) between the side airbag assembly (LH) and the airbag sensor assembly.
(c) Connect negative (–) terminal cable to the battery, and wait at least for 2 seconds.

CHECK:

(a) Turn the ignition switch to ON and wait at least for 20 seconds.
(b) Clear the DTC stored in memory (See step 5 on page DI–497).
(c) Turn the ignition switch to LOCK, and wait at least for 20 seconds.
(d) Turn the ignition switch to ON, and wait at least for 20 seconds.
(e) Check the DTC (See page DI–497).

OK:

DTC B0118/46 is not output.

HINT:
Codes other than code B0118/46 may be output at this time, but they are not relevant to this check.

NG	Replace airbag sensor assembly.

OK

4	Check side squib (LH).

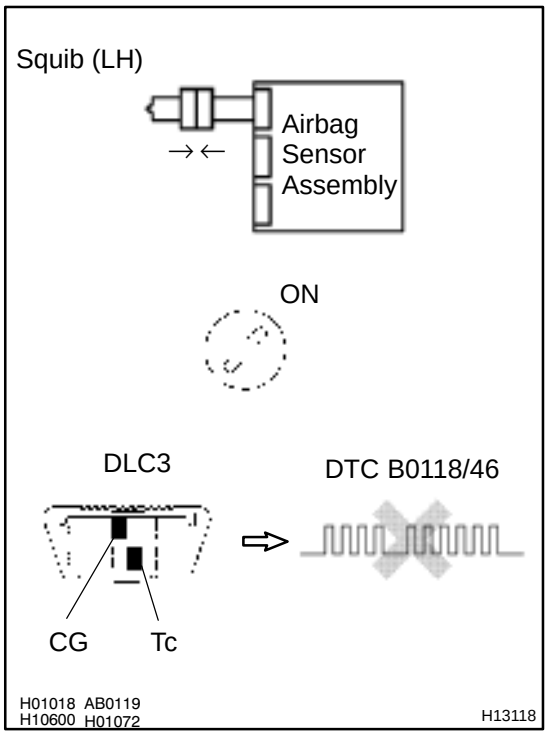

PREPARATION:

(a) Turn the ignition switch to LOCK.
(b) Disconnect negative (–) terminal cable from the battery, and wait at least for 90 seconds.
(c) Connect the side airbag assembly (LH) connector.
(d) Connect negative (–) terminal cable to the battery, and wait at least for 2 seconds.

CHECK:

(a) Turn the ignition switch to ON, and wait at least for 20 seconds.
(b) Clear the DTC stored in memory (See step 5 on page DI–497).
(c) Turn the ignition switch to LOCK, and wait at least for 20 seconds.
(d) Turn the ignition switch to ON, and wait at least for 20 seconds.
(e) Check the DTC (See page DI–497).

OK:

DTC B0118/46 is not output.

HINT:
Codes other than code B0118/46 may be output at this time, but they are not relevant to this check.

NG → **Replace side airbag assembly (LH).**

OK

From the results of the above inspection, the malfunctioning part can now be considered normal. To make sure of this, use the simulation method to check. If the malfunctioning part can not be detected by the simulation method, replace all SRS components including the wire harness.

DI6PJ–06

DTC	B0130/63	Short in P/T Squib (RH) Circuit

CIRCUIT DESCRIPTION

The P/T squib (RH) circuit consists of the airbag sensor assembly and seat belt pretensioner (RH).
It causes the SRS to deploy when the SRS deployment conditions are satisfied.
For details of the function of each component, see OPERATION on page RS–2.
DTC B0130/63 is recorded when a short is detected in the P/T squib (RH) circuit.

DTC No.	DTC Detecting Condition	Trouble Area
B0130/63	• Short circuit between PR+ wire harness and PR– wire harness of squib • P/T squib (RH) malfunction • Airbag sensor assembly malfunction	• Seat belt pretensioner (RH) • Airbag sensor assembly • Wire harness

WIRING DIAGRAM

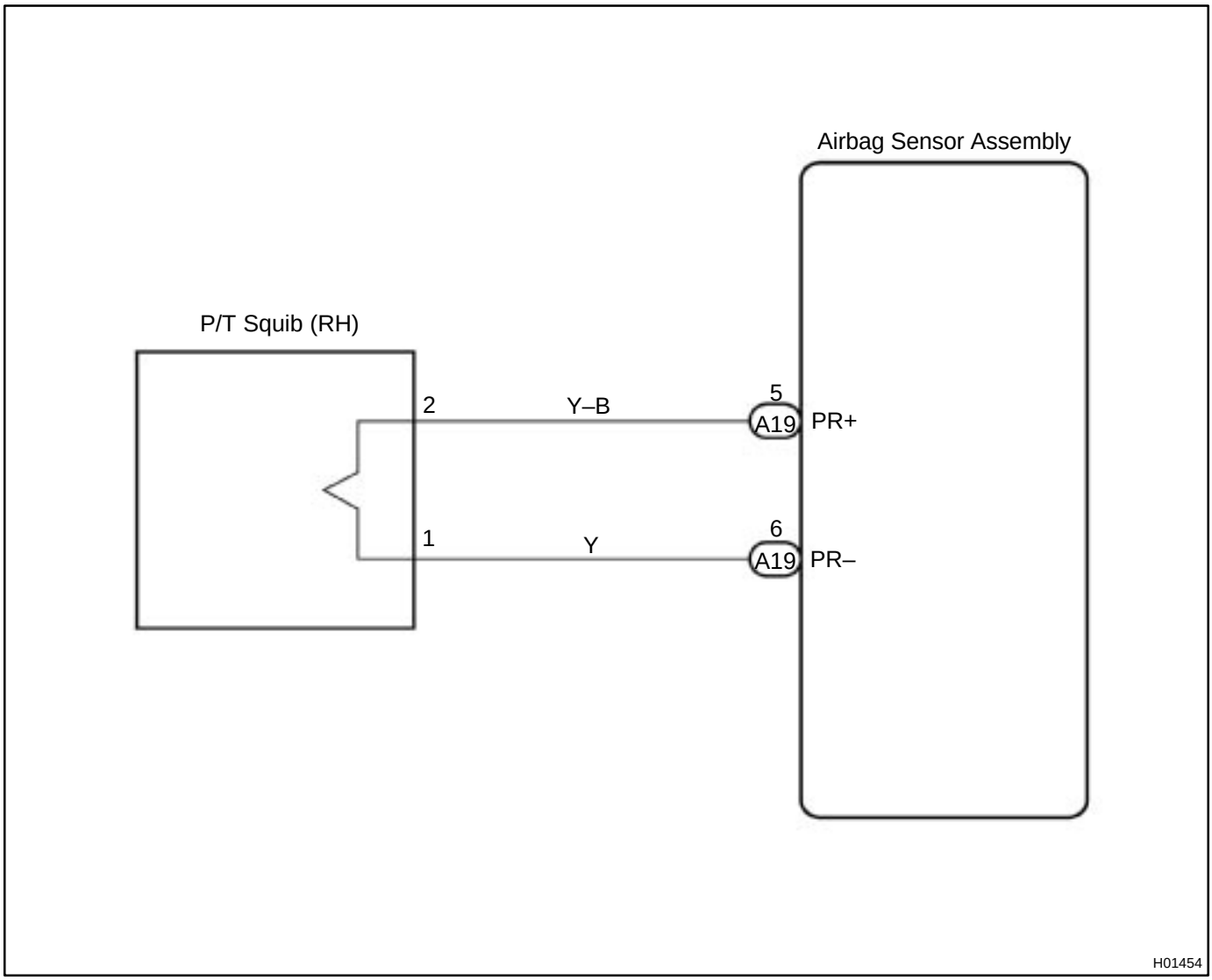

INSPECTION PROCEDURE

1	**Prepare for inspection (See step 1 on page DI–629).**

2	**Check P/T squib (RH) circuit.**

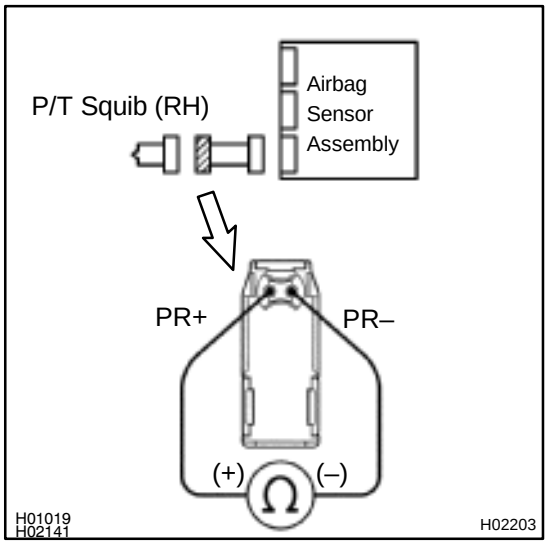

PREPARATION:

Release the airbag activation prevention mechanism of the connector (on the airbag sensor assembly side) between the airbag sensor assembly and the seat belt pretensioner (RH) (See page DI–497).

CHECK:

For the connector (on the seat belt pretensioner side) between the seat belt pretensioner (RH) and the airbag sensor assembly, measure the resistance between PR+ and PR–.

OK:

Resistance: 1 MΩ or Higher

NG → **Repair or replace harness or connector between seat belt pretensioner (RH) and airbag sensor assembly.**

OK

3	Check airbag sensor assembly.

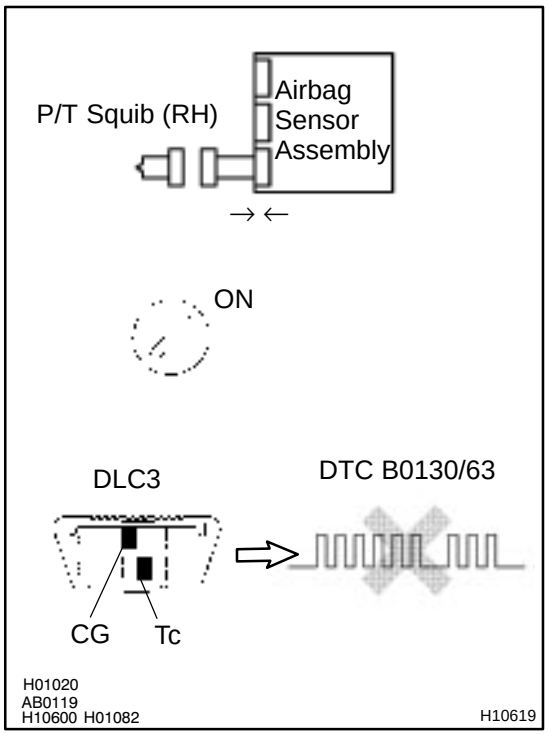

PREPARATION:

(a) Connect the connector to the airbag sensor assembly.
(b) Connect negative (–) terminal cable to the battery, and wait at least for 2 seconds.

CHECK:

(a) Turn the ignition switch to ON and wait at least for 20 seconds.
(b) Clear the DTC stored in memory (See page DI–497).
(c) Turn the ignition switch to LOCK, and wait at least for 20 seconds.
(d) Turn the ignition switch to ON, and wait at least for 20 seconds.
(e) Check the DTC (See page DI–497).

OK:

DTC B0130/63 is not output.

HINT:
Codes other than code B0130/63 may be output at this time, but they are not relevant to this check.

NG → **Replace airbag sensor assembly.**

OK

4	Check P/T squib (RH).

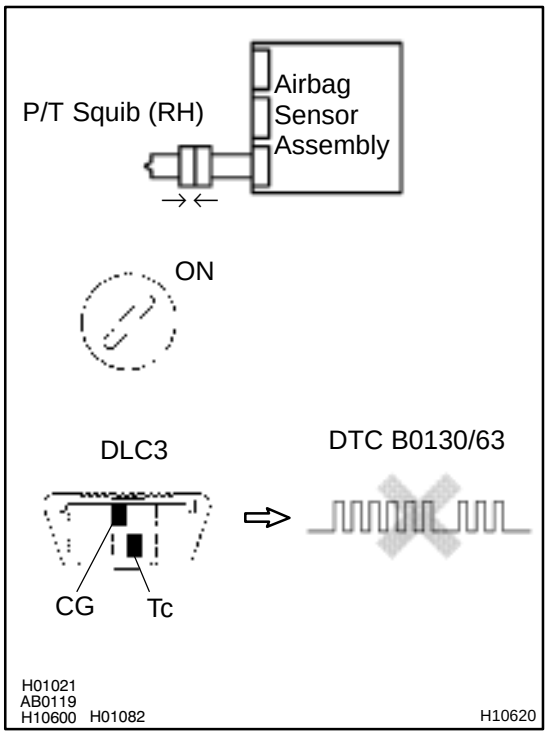

PREPARATION:

(a) Turn the ignition switch to LOCK.
(b) Disconnect negative (–) terminal cable from the battery, and wait at least for 90 seconds.
(c) Connect the seat belt pretensioner (RH) connector.
(d) Connect negative (–) terminal cable to the battery, and wait at least for 2 seconds.

CHECK:

(a) Turn the ignition switch to LOOK, and wait at least for 20 second.
(b) Turn the ignition switch to ON, and wait at least for 20 seconds.
(c) Clear the DTC stored in memory (See page DI–497).
(d) Turn the ignition switch to LOCK, and wait at least for 20 seconds.
(e) Turn the ignition switch to ON, and wait at least for 20 seconds.
(f) Check the DTC (See page DI–497).

OK:

DTC B0130/63 is not output.

HINT:

Codes other than code B0130/63 may be output at this time, but they are not relevant to this check.

NG → **Replace seat belt pretensioner (RH).**

OK

From the results of the above inspection, the malfunctioning part can now be considered normal. To make sure of this, use the simulation method to check.

DI6PK–04

DTC	B0131/64	Open in P/T Squib (RH) Circuit

CIRCUIT DESCRIPTION

The P/T squib circuit (RH) consists of the airbag sensor assembly and seat belt pretensioner (RH).
It causes the SRS to deploy when the SRS deployment conditions are satisfied.
For details of the function of each component, see OPERATION on page RS–2.
DTC B0131/64 is recorded when an open is detected in the P/T squib (RH) circuit.

DTC No.	DTC Detecting Condition	Trouble Area
B0131/64	• Open circuit in PR+ wire harness or PR– wire harness of squib • P/T squib (RH) malfunction • Airbag sensor assembly malfunction	• Seat belt pretensioner (RH) • Airbag sensor assembly • Wire harness

WIRING DIAGRAM

See page DI–566.

INSPECTION PROCEDURE

1	**Prepare for inspection (See step 1 on page DI–629).**

2	**Check P/T squib (RH) circuit.**

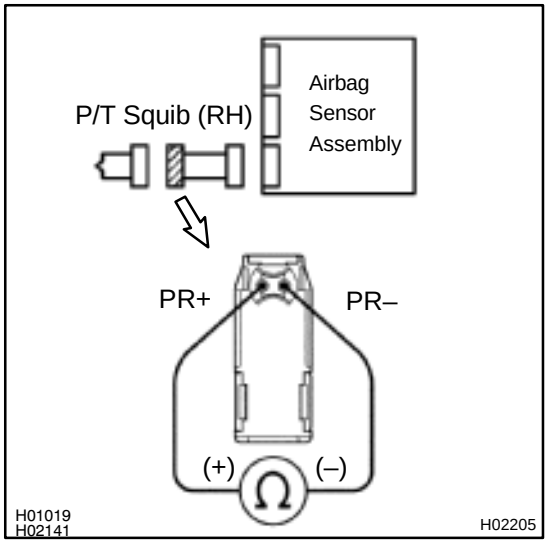

CHECK:

For the connector (on the seat belt pretensioner side) between the seat belt pretensioner (RH) and the airbag sensor assembly, measure the resistance between PR+ and PR–.

OK:

Resistance: Below 1 Ω

NG → **Repair or replace harness or connector between seat belt pretensioner (RH) and airbag sensor assembly.**

OK

3	Check airbag sensor assembly.

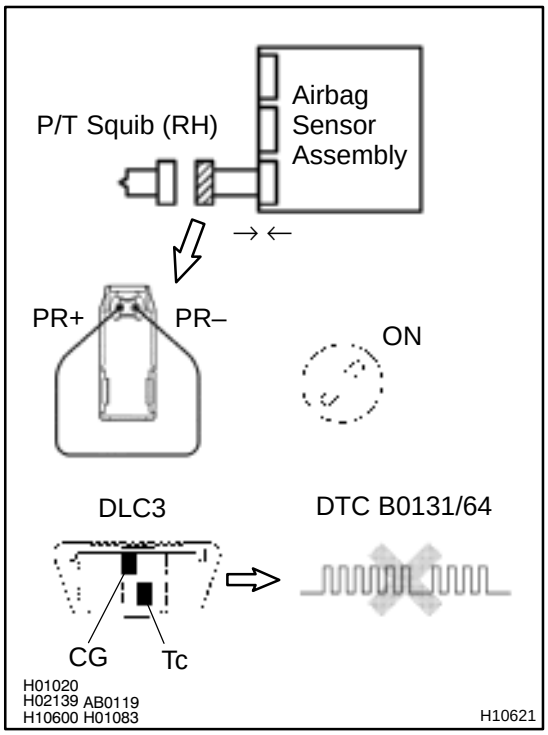

PREPARATION:

(a) Connect the connector to the airbag sensor assembly.
(b) Using a service wire, connect PR+ and PR– of the connector (on the seat belt pretensioner side) between the seat belt pretensioner (RH) and the airbag sensor assembly.
(c) Connect negative (–) terminal cable to the battery, and wait at least for 2 seconds.

CHECK:

(a) Turn the ignition switch to ON and wait at least for 20 seconds.
(b) Clear the DTC stored in memory (See page DI–497).
(c) Turn the ignition switch to LOCK, and wait at least for 20 seconds.
(d) Turn the ignition switch to ON, and wait at least for 20 seconds.
(e) Check the DTC (See page DI–497).

OK:

DTC B0131/64 is not output.

HINT:
Codes other than code B0131/64 may be output at this time, but they are not relevant to this check.

NG	Replace airbag sensor assembly.

OK

4	Check P/T squib (RH).

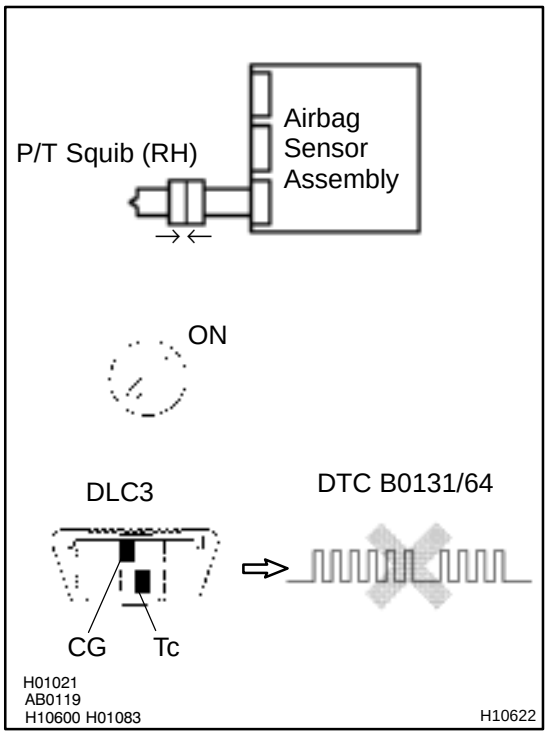

PREPARATION:

(a) Turn the ignition switch to LOCK.
(b) Disconnect negative (–) terminal cable from the battery, and wait at least for 90 seconds.
(c) Connect the seat belt pretensioner (RH) connector.
(d) Connect negative (–) terminal cable to the battery, and wait at least for 2 seconds.

CHECK:

(a) Turn the ignition switch to ON, and wait at least for 20 seconds.
(b) Clear the DTC stored in memory (See page DI–497).
(c) Turn the ignition switch to LOCK, and wait at least for 20 seconds.
(d) Turn the ignition switch to ON, and wait at least for 20 seconds.
(e) Check the DTC (See page DI–497).

OK:

DTC B0131/64 is not output.

HINT:

Codes other than code B0131/64 may be output at this time, but they are not relevant to this check.

NG	Replace seat belt pretensioner (RH).

OK

From the results of the above inspection, the malfunctioning part can now be considered normal. To make sure of this, use the simulation method to check.

DTC	B0132/61	Short in P/T Squib (RH) Circuit (to Ground)

CIRCUIT DESCRIPTION

The P/T squib (RH) circuit consists of the airbag sensor assembly and seat belt pretensioner (RH).
It causes the SRS to deploy when the SRS deployment conditions are satisfied.
For details of the function of each component, see OPERATION on page RS–2.
DTC B0132/61 is recorded when a ground short is detected in the P/T squib (RH) circuit.

DTC No.	DTC Detecting Condition	Trouble Area
B0132/61	• Short circuit in P/T squib (RH) wire harness (to ground) • P/T squib (RH) malfunction • Airbag sensor assembly malfunction	• Seat belt pretensioner (RH) • Airbag sensor assembly • Wire harness

WIRING DIAGRAM

See page DI–566.

INSPECTION PROCEDURE

1	**Prepare for inspection (See step 1 on page DI–629).**

2	**Check P/T squib (RH) circuit.**

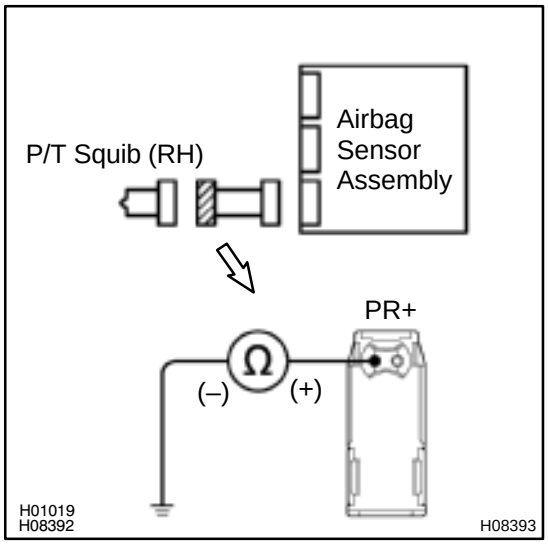

CHECK:

For the connector (on the seat belt pretensioner side) between the seat belt pretensioner (RH) and the airbag sensor assembly, measure the resistance between PR+ and body ground.

OK:

Resistance: 1 MΩ or Higher

NG → **Repair or replace harness or connector between seat belt pretensioner (RH) and airbag sensor assembly.**

OK

3	Check airbag sensor assembly.

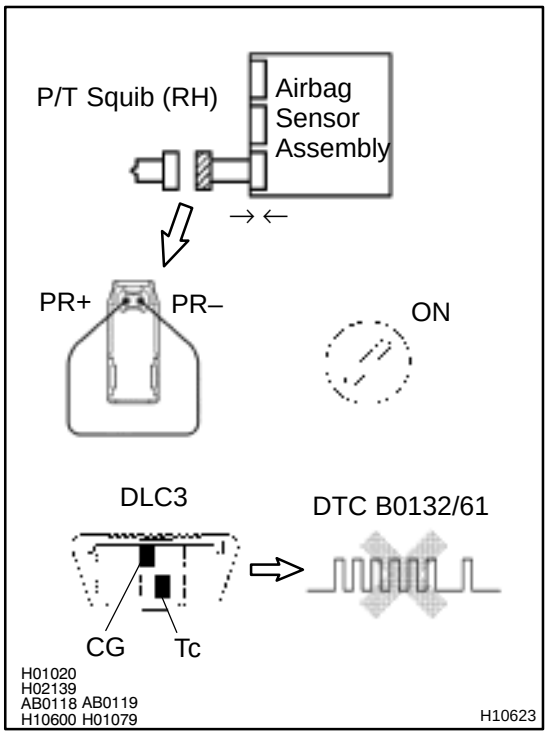

PREPARATION:

(a) Connect the connector to the airbag sensor assembly.

(b) Using a service wire, connect PR+ and PR– of the connector (on the seat belt pretensioner side) between the seat belt pretensioner (RH) and the airbag sensor assembly.

(c) Connect negative (–) terminal cable to the battery, and wait at least for 2 seconds.

CHECK:

(a) Turn the ignition switch to ON and wait at least for 20 seconds.

(b) Clear the DTC stored in memory (See step 5 on page DI–497).

(c) Turn the ignition switch to LOCK, and wait at least for 20 seconds.

(d) Turn the ignition switch to ON, and wait at least for 20 seconds.

(e) Check the DTC (See page DI–497).

OK:

DTC B0132/61 is not output.

HINT:

Codes other than code B0132/61 may be output at this time, but they are not relevant to this check.

NG	Replace airbag sensor assembly.

OK

4	Check P/T squib (RH).

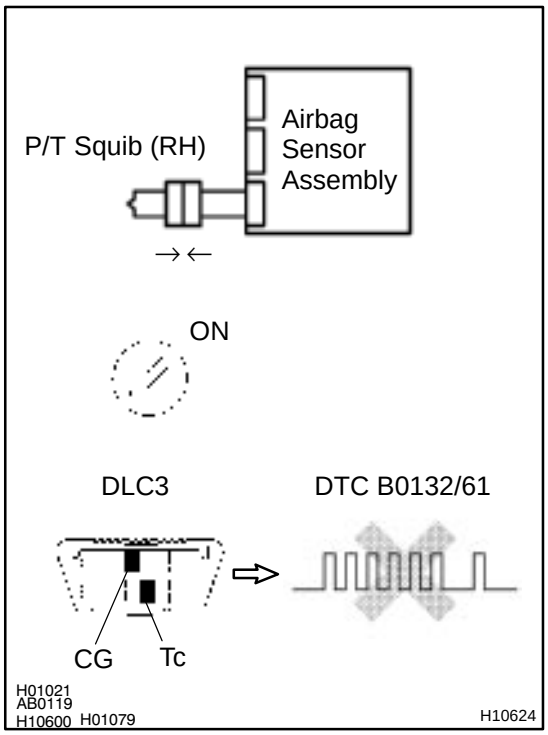

PREPARATION:

(a) Turn the ignition switch to LOCK.
(b) Disconnect negative (–) terminal cable from the battery, and wait at least for 90 seconds.
(c) Connect the seat belt pretensioner (RH) connector.
(d) Connect negative (–) terminal cable to the battery, and wait at least for 2 seconds.

CHECK:

(a) Turn the ignition switch to ON, and wait at least for 20 seconds.
(b) Clear the DTC stored in memory (See step 5 on page DI–497).
(c) Turn the ignition switch to LOCK, and wait at least for 20 seconds.
(d) Turn the ignition switch to ON, and wait at least for 20 seconds.
(e) Check the DTC (See page DI–497).

OK:

DTC B0132/61 is not output.

HINT:
Codes other than code B0132/61 may be output at this time, but they are not relevant to this check.

NG	Replace seat belt pretensioner (RH).

OK

From the results of the above inspection, the malfunctioning part can now be considered normal. To make sure of this, use the simulation method to check. If the malfunctioning part can not be detected by the simulation method, replace all SRS components including the wire harness.

DTC	B0133/62	Short in P/T Squib (RH) Circuit (to B+)

CIRCUIT DESCRIPTION

The P/T squib (RH) circuit consists of the airbag sensor assembly and seat belt pretensioner (RH).
It causes the SRS to deploy when the SRS deployment conditions are satisfied.
For details of the function of each component, see OPERATION on page RS–2.
DTC B0133/62 is recorded when a B+ short is detected in the P/T squib (RH) circuit.

DTC No.	DTC Detecting Condition	Trouble Area
B0133/62	• Short circuit in seat belt pretensioner (RH) wire harness (to B+) • P/T squib (RH) malfunction • Airbag sensor assembly malfunction	• Seat belt pretensioner (RH) • Airbag sensor assembly • Wire harness

WIRING DIAGRAM

See page DI–566.

INSPECTION PROCEDURE

1	**Prepare for inspection (See step 1 on page DI–629).**

2	**Check P/T squib (RH) circuit.**

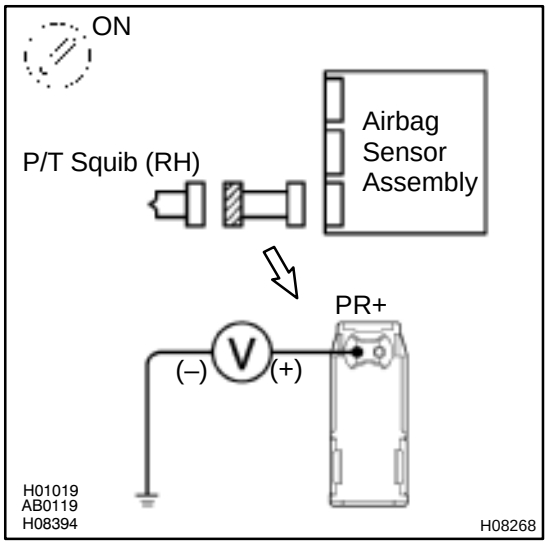

CHECK:

(a) Turn the ignition switch to ON.

(b) For the connector (on the seat belt pretensioner side) between the seat belt pretensioner (RH) and the airbag sensor assembly, measure the voltage between PR+ and body ground.

OK:

Voltage: 0 V

NG → **Repair or replace harness or connector between seat belt pretensioner (RH) and airbag sensor assembly.**

OK

3	Check airbag sensor assembly.

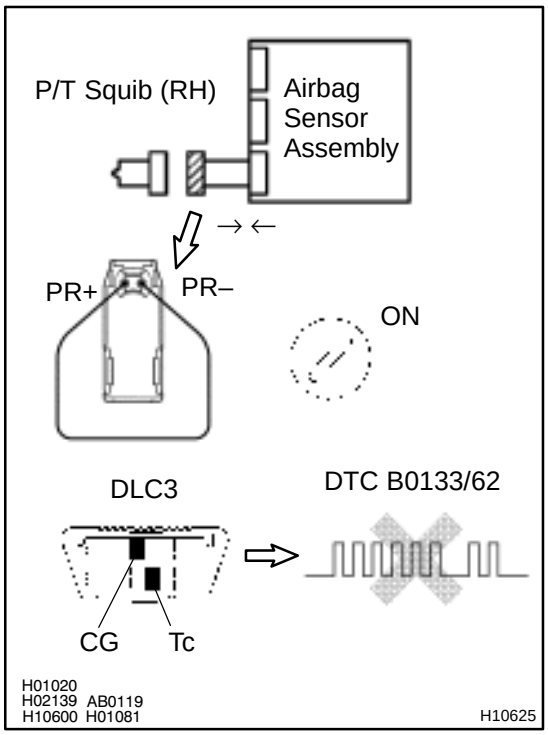

PREPARATION:

(a) Connect the connector to the airbag sensor assembly.

(b) Using a service wire, connect PR+ and PR– of the connector (on the seat belt pretensioner side) between the seat belt pretensioner (RH) and the airbag sensor assembly.

(c) Connect negative (–) terminal cable to the battery, and wait at least for 2 seconds.

CHECK:

(a) Turn the ignition switch to ON and wait at least for 20 seconds.

(b) Clear the DTC stored in memory (See step 5 on page DI–497).

(c) Turn the ignition switch to LOCK, and wait at least for 20 seconds.

(d) Turn the ignition switch to ON, and wait at least for 20 seconds.

(e) Check the DTC (See page DI–497).

OK:

DTC B0133/62 is not output.

HINT:

Codes other than code B0133/62 may be output at this time, but they are not relevant to this check.

NG → **Replace airbag sensor assembly.**

OK

4	Check P/T squib (RH).

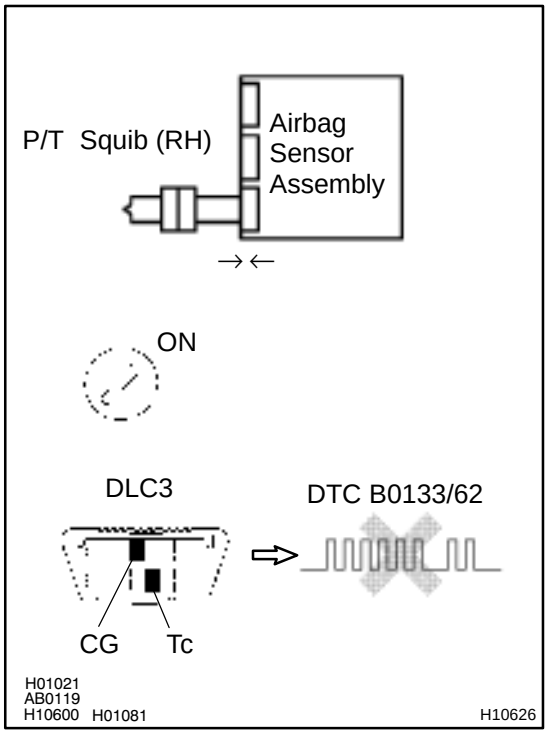

PREPARATION:

(a) Turn ignition switch to LOCK.
(b) Disconnect negative (–) terminal cable from the battery, and wait at least for 90 seconds.
(c) Connect the seat belt pretensioner (RH) connector.
(d) Connect negative (–) terminal cable to the battery, and wait at least for 2 seconds.

CHECK:

(a) Turn the ignition switch to ON, and wait at least for 20 seconds.
(b) Clear the DTC stored in memory (See step 5 on page DI–497).
(c) Turn the ignition switch to LOCK, and wait at least for 20 seconds.
(d) Turn the ignition switch to ON, and wait at least for 20 seconds.
(e) Check the DTC (See page DI–497).

OK:

DTC B0133/62 is not output.

HINT:
Codes other than code B0133/62 may be output at this time, but they are not relevant to this check.

NG	Replace seat belt pretensioner (RH).

OK

From the results of the above inspection, the malfunctioning part can now be considered normal. To make sure of this, use the simulation method to check. If the malfunctioning part can not be detected by the simulation method, replace all SRS components including the wire harness.

DI6PN–06

DTC	B0135/73	Short in P/T Squib (LH) Circuit

CIRCUIT DESCRIPTION

The P/T squib (LH) circuit consists of the airbag sensor assembly and seat belt pretensioner (LH).
It causes the SRS to deploy when the SRS deployment conditions are satisfied.
For details of the function of each component, see OPERATION on page RS–2.
DTC B0135/73 is recorded when a short is detected in the P/T squib (LH) circuit.

DTC No.	DTC Detecting Condition	Trouble Area
B0135/73	• Short circuit between PL+ wire harness and PL– wire harness of squib • P/T squib (LH) malfunction • Airbag sensor assembly malfunction	• Seat belt pretensioner (LH) • Airbag sensor assembly • Wire harness

WIRING DIAGRAM

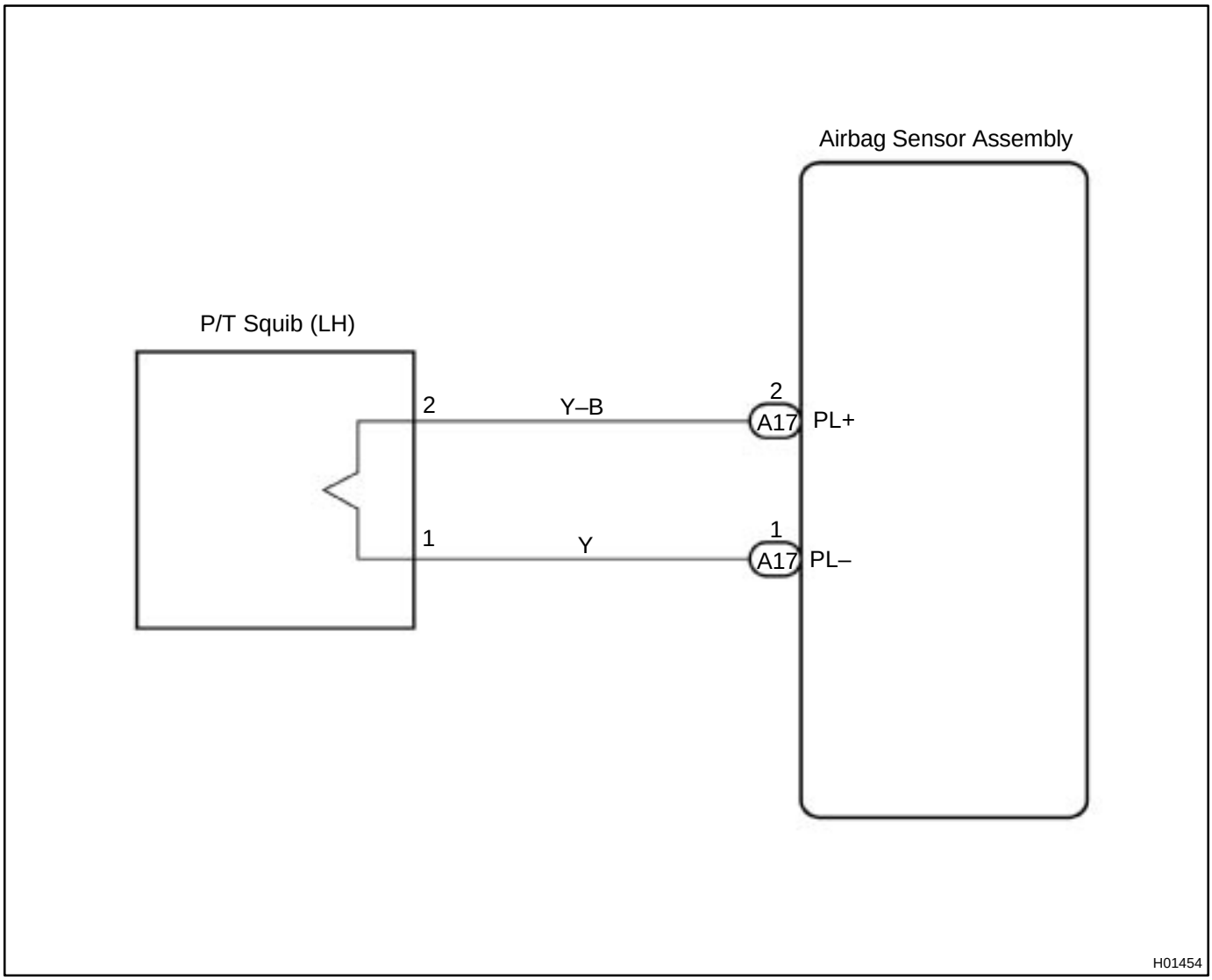

INSPECTION PROCEDURE

1	**Prepare for inspection (See step 1 on page DI–629).**

2	**Check P/T squib (LH) circuit.**

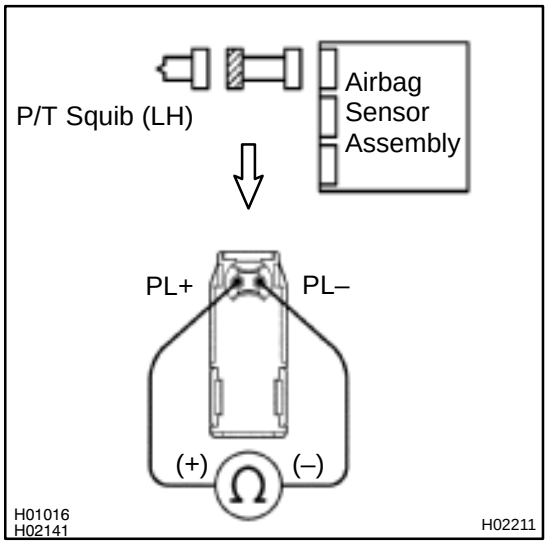

PREPARATION:

Release the airbag activation prevention mechanism of the connector (on the airbag sensor assembly side) between the airbag sensor assembly and the seat belt pretensioner (LH) (See page DI–497).

CHECK:

For the connector (on the seat belt pretensioner side) between the seat belt pretensioner (LH) and the airbag sensor assembly, measure the resistance between PL+ and PL–.

OK:

Resistance: 1 MΩ or Higher

NG → **Repair or replace harness or connector between seat belt pretensioner (LH) and airbag sensor assembly.**

OK

3	Check airbag sensor assembly.

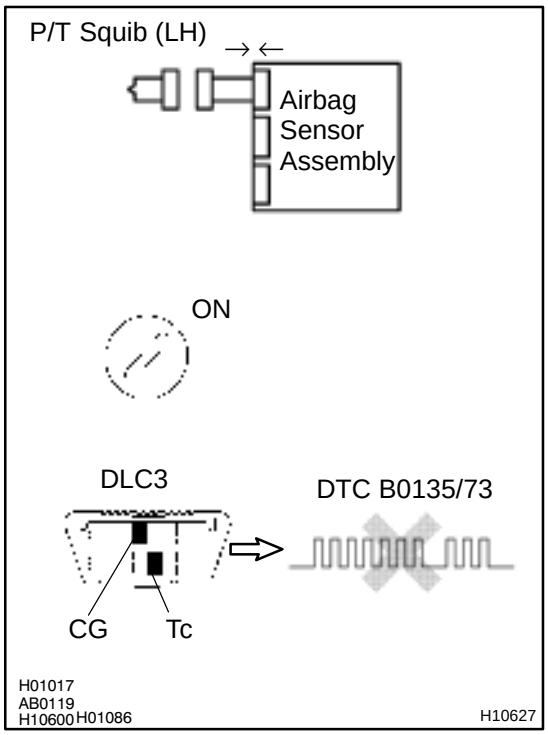

PREPARATION:

(a) Connect the connector to the airbag sensor assembly.
(b) Connect negative (–) terminal cable to the battery, and wait at least for 2 seconds.

CHECK:

(a) Turn the ignition switch to ON and wait at least for 20 seconds.
(b) Clear the DTC stored in memory (See page DI–497).
(c) Turn the ignition switch to LOCK, and wait at least for 20 seconds.
(d) Turn the ignition switch to ON, and wait at least for 20 seconds.
(e) Check the DTC (See page DI–497).

OK:

DTC B0135/73 is not output.

HINT:
Codes other than code B0135/73 may be output at this time, but they are not relevant to this check.

NG → **Replace airbag sensor assembly.**

OK

4	Check P/T squib (LH).

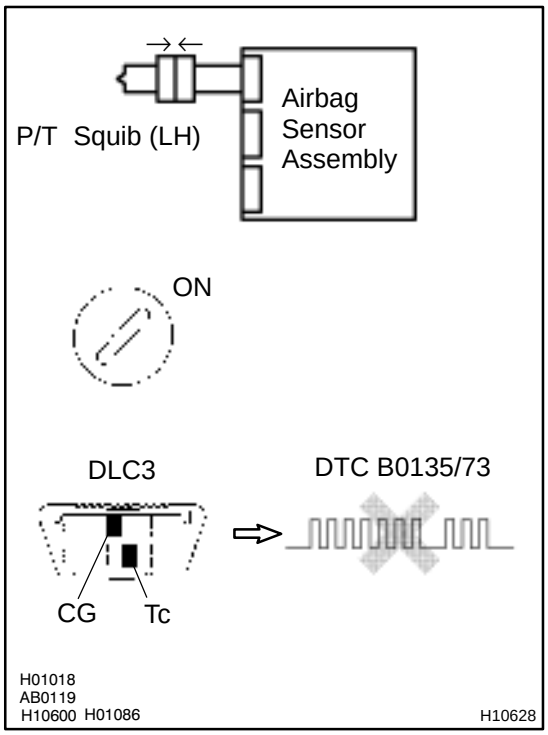

PREPARATION:

(a) Turn the ignition switch to LOCK.
(b) Disconnect negative (–) terminal cable from the battery, and wait at least for 90 seconds.
(c) Connect the seat belt pretensioner (LH) connector.
(d) Connect negative (–) terminal cable to the battery, and wait at least for 2 seconds.

CHECK:

(a) Turn the ignition switch to LOOK, and wait at least for 20 second.
(b) Turn the ignition switch to ON, and wait at least for 20 seconds.
(c) Clear the DTC stored in memory (See page DI–497).
(d) Turn the ignition switch to LOCK, and wait at least for 20 seconds.
(e) Turn the ignition switch to ON, and wait at least for 20 seconds.
(f) Check the DTC (See page DI–497).

OK:

DTC B0135/73 is not output.

HINT:

Codes other than code B0135/73 may be output at this time, but they are not relevant to this check.

NG → **Replace seat belt pretensioner (LH).**

OK

From the results of the above inspection, the malfunctioning part can now be considered normal. To make sure of this, use the simulation method to check.

DI6PO–04

DTC	B0136/74	Open in P/T Squib (LH) Circuit

CIRCUIT DESCRIPTION

The P/T squib circuit (LH) consists of the airbag sensor assembly and seat belt pretensioner (LH).
It causes the SRS to deploy when the SRS deployment conditions are satisfied.
For details of the function of each component, see OPERATION on page RS–2.
DTC B0136/74 is recorded when an open is detected in the P/T squib (LH) circuit.

DTC No.	DTC Detecting Condition	Trouble Area
B0136/74	• Open circuit in PL+ wire harness or PL– wire harness of squib • P/T squib (LH) malfunction • Airbag sensor assembly malfunction	• Seat belt pretensioner (LH) • Airbag sensor assembly • Wire harness

WIRING DIAGRAM

See page DI–579.

INSPECTION PROCEDURE

1	**Prepare for inspection (See step 1 on page DI–629).**

2	**Check P/T squib (LH) circuit.**

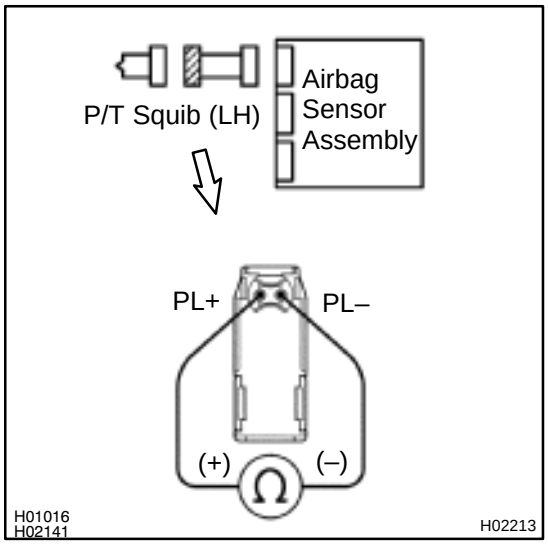

CHECK:

For the connector (on the seat belt pretensioner side) between the seat belt pretensioner (LH) and the airbag sensor assembly, measure the resistance between PL+ and PL–.

OK:

Resistance: Below 1 Ω

NG → **Repair or replace harness or connector between seat belt pretensioner (LH) and airbag sensor assembly.**

OK

3	Check airbag sensor assembly.

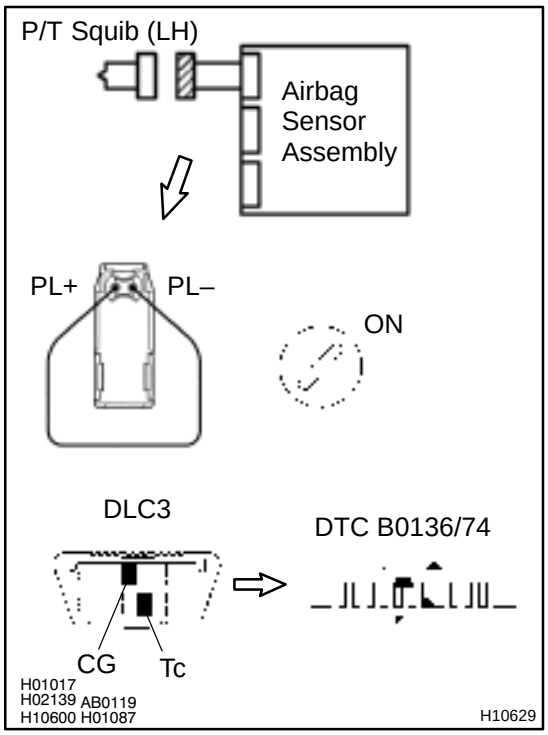

PREPARATION:

(a) Connect the connector to the airbag sensor assembly.
(b) Using a service wire, connect PL+ and PL– of the connector (on the seat belt pretensioner side) between the seat belt pretensioner (LH) and the airbag sensor assembly.
(c) Connect negative (–) terminal cable to the battery, and wait at least for 2 seconds.

CHECK:

(a) Turn the ignition switch to ON and wait at least for 20 seconds.
(b) Clear the DTC stored in memory (See page DI–497).
(c) Turn the ignition switch to LOCK, and wait at least for 20 seconds.
(d) Turn the ignition switch to ON, and wait at least for 20 seconds.
(e) Check the DTC (See page DI–497).

OK:

DTC B0136/74 is not output.

HINT:

Codes other than code B0136/74 may be output at this time, but they are not relevant to this check.

NG → **Replace airbag sensor assembly.**

OK

4	Check P/T squib (LH).

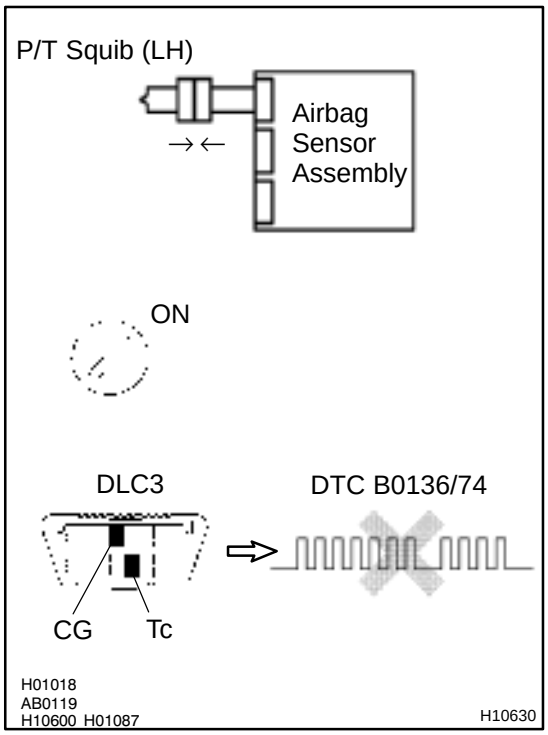

PREPARATION:

(a) Turn the ignition switch to LOCK.
(b) Disconnect negative (–) terminal cable from the battery, and wait at least for 90 seconds.
(c) Connect the seat belt pretensioner (LH) connector.
(d) Connect negative (–) terminal cable to the battery, and wait at least for 2 seconds.

CHECK:

(a) Turn the ignition switch to ON, and wait at least for 20 seconds.
(b) Clear the DTC stored in memory (See page DI–497).
(c) Turn the ignition switch to LOCK, and wait at least for 20 seconds.
(d) Turn the ignition switch to ON, and wait at least for 20 seconds.
(e) Check the DTC (See page DI–497).

OK:

DTC B0136/74 is not output.

HINT:

Codes other than code B0136/74 may be output at this time, but they are not relevant to this check.

NG	Replace seat belt pretensioner (LH).

OK

From the results of the above inspection, the malfunctioning part can now be considered normal. To make sure of this, use the simulation method to check.

DTC	B0137/71	Short in P/T Squib (LH) Circuit (to Ground)

CIRCUIT DESCRIPTION

The P/T squib (LH) circuit consists of the airbag sensor assembly and seat belt pretensioner (LH).
It causes the SRS to deploy when the SRS deployment conditions are satisfied.
For details of the function of each component, see OPERATION on page RS–2.
DTC B0137/71 is recorded when a ground short is detected in the P/T squib (LH) circuit.

DTC No.	DTC Detecting Condition	Trouble Area
B0137/71	• Short circuit in P/T squib (LH) wire harness (to ground) • P/T squib (LH) malfunction • Airbag sensor assembly malfunction	• Seat belt pretensioner (LH) • Airbag sensor assembly • Wire harness

WIRING DIAGRAM

See page DI–579.

INSPECTION PROCEDURE

1	**Prepare for inspection (See step 1 on page DI–629).**

2	**Check P/T squib (LH) circuit.**

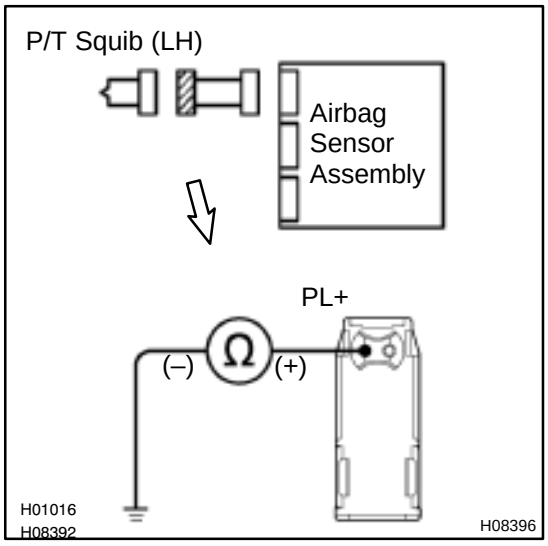

CHECK:

For the connector (on the seat belt pretensioner side) between the seat belt pretensioner (LH) and the airbag sensor assembly, measure the resistance between PL+ and body ground.

OK:

Resistance: 1 MΩ or Higher

NG → **Repair or replace harness or connector between seat belt pretensioner (LH) and airbag sensor assembly.**

OK

3	Check airbag sensor assembly.

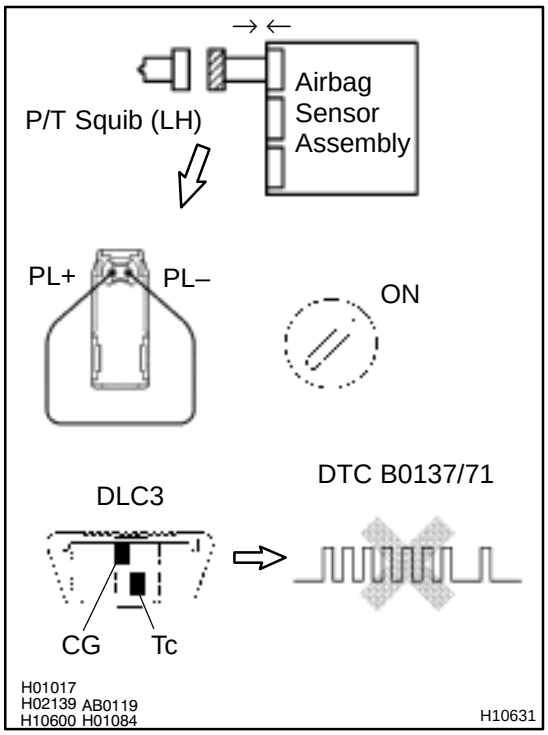

PREPARATION:

(a) Connect the connector to the airbag sensor assembly.
(b) Using a service wire, connect PL+ and PL– of the connector (on the seat belt pretensioner side) between the seat belt pretensioner (LH) and the airbag sensor assembly.
(c) Connect negative (–) terminal cable to the battery, and wait at least for 2 seconds.

CHECK:

(a) Turn the ignition switch to ON and wait at least for 20 seconds.
(b) Clear the DTC stored in memory (See step 5 on page DI–497).
(c) Turn the ignition switch to LOCK, and wait at least for 20 seconds.
(d) Turn the ignition switch to ON, and wait at least for 20 seconds.
(e) Check the DTC (See page DI–497).

OK:

DTC B0137/71 is not output.

HINT:
Codes other than code B0137/71 may be output at this time, but they are not relevant to this check.

NG	Replace airbag sensor assembly.

OK

4	Check P/T squib (LH).

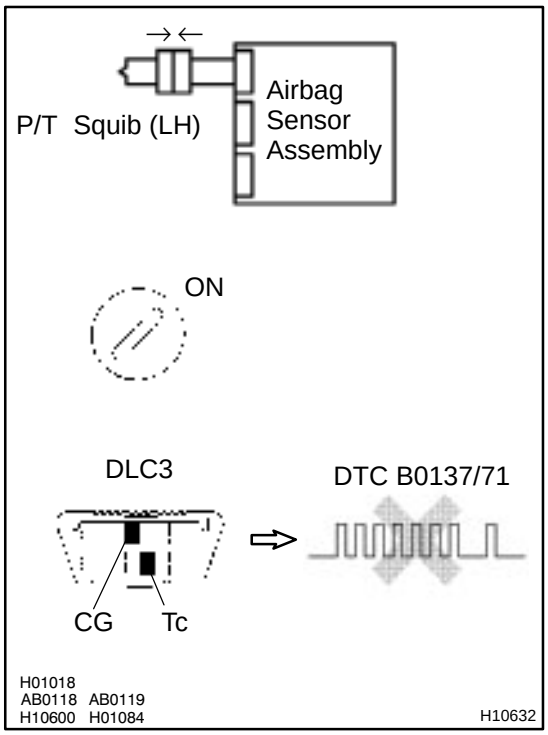

PREPARATION:

(a) Turn the ignition switch to LOCK.
(b) Disconnect negative (–) terminal cable from the battery, and wait at least for 90 seconds.
(c) Connect the seat belt pretensioner (LH) connector.
(d) Connect negative (–) terminal cable to the battery, and wait at least for 2 seconds.

CHECK:

(a) Turn the ignition switch to ON, and wait at least for 20 seconds.
(b) Clear the DTC stored in memory (See step 5 on page DI–497).
(c) Turn the ignition switch to LOCK, and wait at least for 20 seconds.
(d) Turn the ignition switch to ON, and wait at least for 20 seconds.
(e) Check the DTC (See page DI–497).

OK:

DTC B0137/71 is not output.

HINT:
Codes other than code B0137/71 may be output at this time, but they are not relevant to this check.

NG → **Replace seat belt pretensioner (LH).**

OK →

From the results of the above inspection, the malfunctioning part can now be considered normal. To make sure of this, use the simulation method to check. If the malfunctioning part can not be detected by the simulation method, replace all SRS components including the wire harness.

DI6PQ–04

DTC	B0138/72	Short in P/T Squib (LH) Circuit (to B+)

CIRCUIT DESCRIPTION

The P/T squib (LH) circuit consists of the airbag sensor assembly and seat belt pretensioner (LH).
It causes the SRS to deploy when the SRS deployment conditions are satisfied.
For details of the function of each component, see OPERATION on page RS–2.
DTC B0138/72 is recorded when a B+ short is detected in the P/T squib (LH) circuit.

DTC No.	DTC Detecting Condition	Trouble Area
B0138/72	• Short circuit in seat belt pretensioner (LH) wire harness (to B+) • P/T squib (LH) malfunction • Airbag sensor assembly malfunction	• Seat belt pretensioner (LH) • Airbag sensor assembly • Wire harness

WIRING DIAGRAM

See page DI–579.

INSPECTION PROCEDURE

1	**Prepare for inspection (See step 1 on page DI–629).**

2	**Check P/T squib (LH) circuit.**

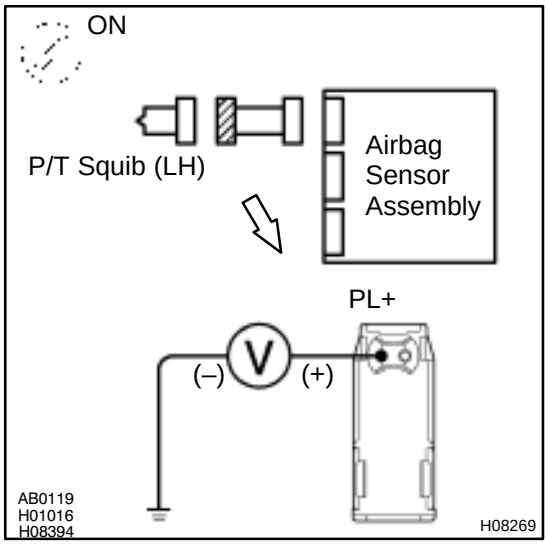

CHECK:

(a) Turn the ignition switch to ON.

(b) For the connector (on the seat belt pretensioner side) between the seat belt pretensioner (LH) and the airbag sensor assembly, measure the voltage between PL+ and body ground.

OK:

Voltage: 0 V

NG → **Repair or replace harness or connector between seat belt pretensioner (LH) and airbag sensor assembly.**

OK

3	Check airbag sensor assembly.

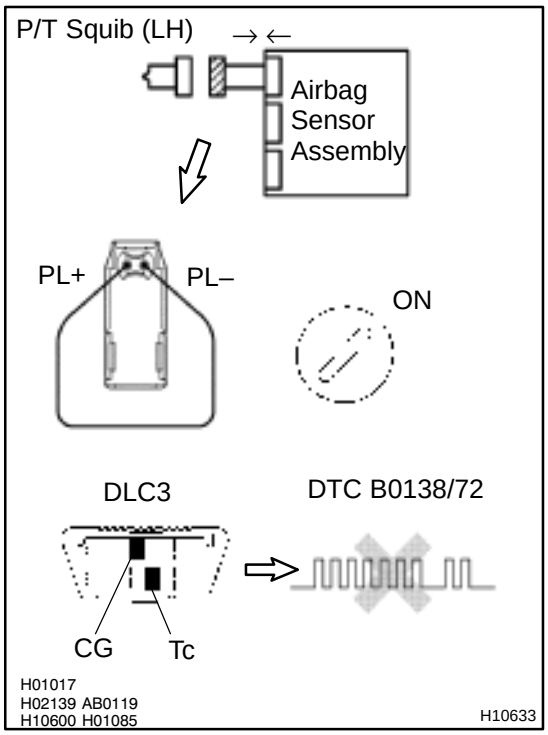

PREPARATION:

(a) Connect the connector to the airbag sensor assembly.
(b) Using a service wire, connect PL+ and PL– of the connector (on the seat belt pretensioner side) between the seat belt pretensioner (LH) and the airbag sensor assembly.
(c) Connect negative (–) terminal cable to the battery, and wait at least for 2 seconds.

CHECK:

(a) Turn the ignition switch to ON and wait at least for 20 seconds.
(b) Clear the DTC stored in memory (See step 5 on page DI–497).
(c) Turn the ignition switch to LOCK, and wait at least for 20 seconds.
(d) Turn the ignition switch to ON, and wait at least for 20 seconds.
(e) Check the DTC (See page DI–497).

OK:

DTC B0138/72 is not output.

HINT:
Codes other than code B0138/72 may be output at this time, but they are not relevant to this check.

NG → **Replace airbag sensor assembly.**

OK

4	Check P/T squib (LH).

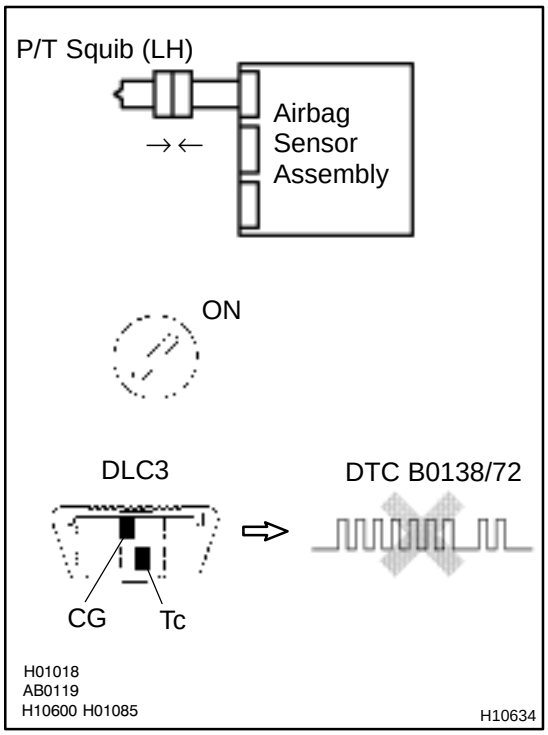

PREPARATION:

(a) Turn the ignition switch to LOCK.
(b) Disconnect negative (–) terminal cable from the battery, and wait at least for 90 seconds.
(c) Connect the seat belt pretensioner (LH) connector.
(d) Connect negative (–) terminal cable to the battery, and wait at least for 2 seconds.

CHECK:

(a) Turn the ignition switch to ON, and wait at least for 20 seconds.
(b) Clear the DTC stored in memory (See step 5 on page DI–497).
(c) Turn the ignition switch to LOCK, and wait at least for 20 seconds.
(d) Turn the ignition switch to ON, and wait at least for 20 seconds.
(e) Check the DTC (See page DI–497).

OK:

DTC B0138/72 is not output.

HINT:
Codes other than code B0138/72 may be output at this time, but they are not relevant to this check.

NG	Replace seat belt pretensioner (LH).

OK

From the results of the above inspection, the malfunctioning part can now be considered normal. To make sure of this, use the simulation method to check. If the malfunctioning part can not be detected by the simulation method, replace all SRS components including the wire harness.

DI6PR–01

DTC	B1100/31	Airbag Sensor Assembly Malfunction

CIRCUIT DESCRIPTION

The airbag sensor assembly consists of a airbag sensor, safing sensor, drive circuit, diagnosis circuit and ignition control, etc.
It receives signals from the airbag sensor, judges whether or not the SRS must be activated, and detects diagnosis system malfunction.
DTC B1100/31 is recorded when occurrence of a malfunction in the airbag sensor assembly is detected.

DTC No.	DTC Detecting Condition	Trouble Area
B1100/31	• Airbag sensor assembly malfunction	• Airbag sensor assembly

INSPECTION PROCEDURE

HINT:
When a malfunction code other than code B1100/31 is displayed at the same time, first repair the malfunction indicated by the malfunction code other than code B1100/31.

1	**Prepare for inspection (See step 1 on page DI–629).**

2	**Check voltage at IG1 and IG2 of airbag sensor assembly.**

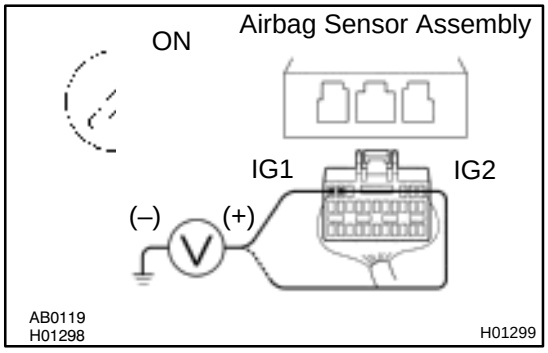

CHECK:

(a) Turn the ignition switch to ON.
(b) Measure the voltage between body ground and each of terminals IG1 and IG2 of the airbag sensor assembly connector.

OK:

Voltage: 10 – 14 V

NG → **Check that an abnormality occurs on the battery and charging system.**

OK

3	Is DTC B1100/31 output again?

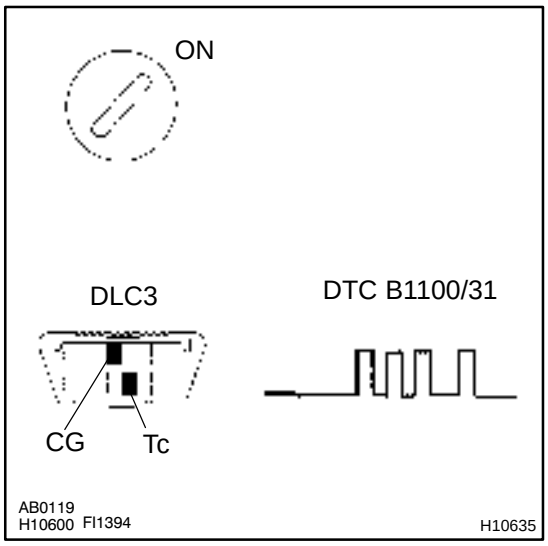

PREPARATION:

Clear the DTC (See step 5 on page DI–497).

CHECK:

(a) Turn the ignition switch to LOCK, and wait at least for 20 seconds.

(b) Turn the ignition switch to ON, and wait at least for 20 seconds.

(c) Repeat operation in step (a) and (b) at least 5 times.

(d) Check the DTC (See page DI–497).

HINT:

Codes other than code B1100/31 may be output at this time, but they are not relevant to this check.

NO → **Using simulation method, reproduce malfunction symptoms (See page IN–30).**

YES

Replace airbag sensor assembly.

DI7IA–06

DTC	B1135/24	Harf Connection in Airbag Sensor Assembly Connector

CIRCUIT DESCRIPTION

The airbag sensor assembly detects partial connection of connector.
For details of the function of each component, see OPERATION on page RS–2.
DTC B1135/24 is recorded when the airbag sensor assembly detects an open in the electrical connection chech mechanism of the airbag sensor connector or in the airbag sensor circuit.

DTC No.	DTC Detecting Condition	Trouble Area
B1135/24	• Malfunction of electrical connection check mechanism of airbag sensor assembly connector • Airbag sensor assembly malfunction	• Electrical connection check mechanism • Airbag sensor assembly

INSPECTION PROCEDURE

1	**Are connector of center airbag sensor assembly properly connected?**

NG → **Connect connectors.**

OK ↓

2	**Prepare for inspection (See step 1 on page DI–629).**

3	Check airbag sensor assembly.

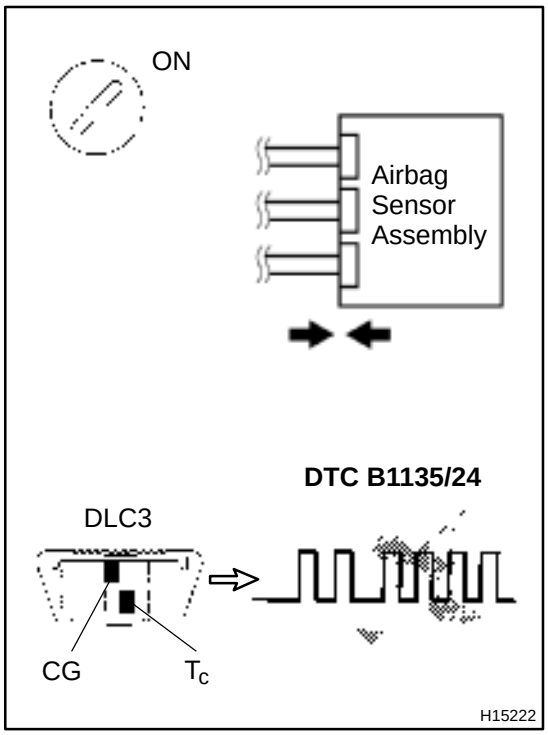

PREPARATION:

(a) Connect the connectors to the airbag sensor assembly.
(b) Connect negative (–) terminal cable to the battery, and wait at least for 2 seconds.

CHECK:

(a) Turn the ignition switch to LOCK, and wait at least for 20 seconds.
(b) Turn the ignition switch to ON, and wait at least for 20 seconds.
(c) Clear the DTC stored in memory (See page DI–497).
(d) Turn the ignition switch to LOCK, and wait at least for 20 seconds.
(e) Turn the ignition switch to ON, and wait at least for 20 seconds.
(f) Check the DTC (See page DI–497).

OK:

DTC B1135/24 is not output.

HINT:

Codes other than code B1135/24 may be output at this time, but they are not relevant to this check.

NG → **Go to the next step.**

OK

From the results of the inspection, the malfunctioning part can now be considered normal. To make sure of this, use the simulation method to check.

4	Check disconnection detection pin in the center airbag sensor assembly connector.

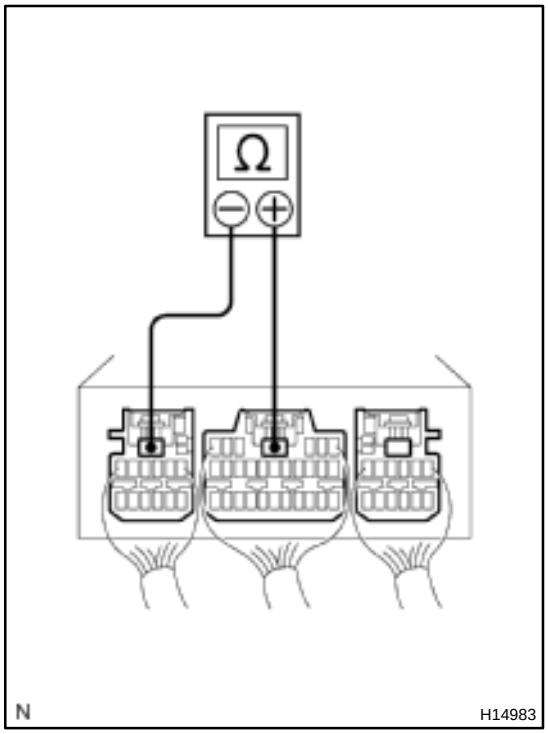

CHECK:

With 3 connectors connected to the sensor assembly, place tester leads onto any 2 of 3 disconnection detection pins and check for continuity.

OK:

Continuity

NG → **Go to the next step.**

OK

From the results of the inspection, the malfunctioning part can now be considered normal. To make sure of this, use the simulation method to check.

5	Perform a visual check of the disconnection detection pin.

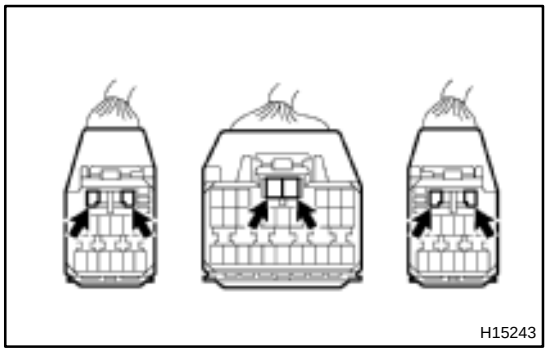

OK:

No deformation is identified.

HINT:

Compare it with the other 2 connector pins.

NG → **Repair or replace airbag sensor assembly connector.**

OK

Replace airbag sensor assembly.

DTC	B1140/32	Side Airbag Sensor Assembly (RH) Malfunction

CIRCUIT DESCRIPTION

The side airbag sensor assembly (RH) consists of the safing sensor, diagnosis circuit and lateral deceleration sensor, etc.
It receives signals from the lateral deceleration sensor, judges whether or not the SRS must be activated, and detects diagnosis system malfunction.
DTC B1140/32 is recorded when occurrence of a malfunction in the side airbag sensor assembly (RH) is detected.

DTC No.	DTC Detecting Condition	Trouble Area
B1140/32	• Side airbag sensor assembly (RH) malfunction	• Side airbag sensor assembly (RH) • Wire harness • Airbag sensor assembly

WIRING DIAGRAM

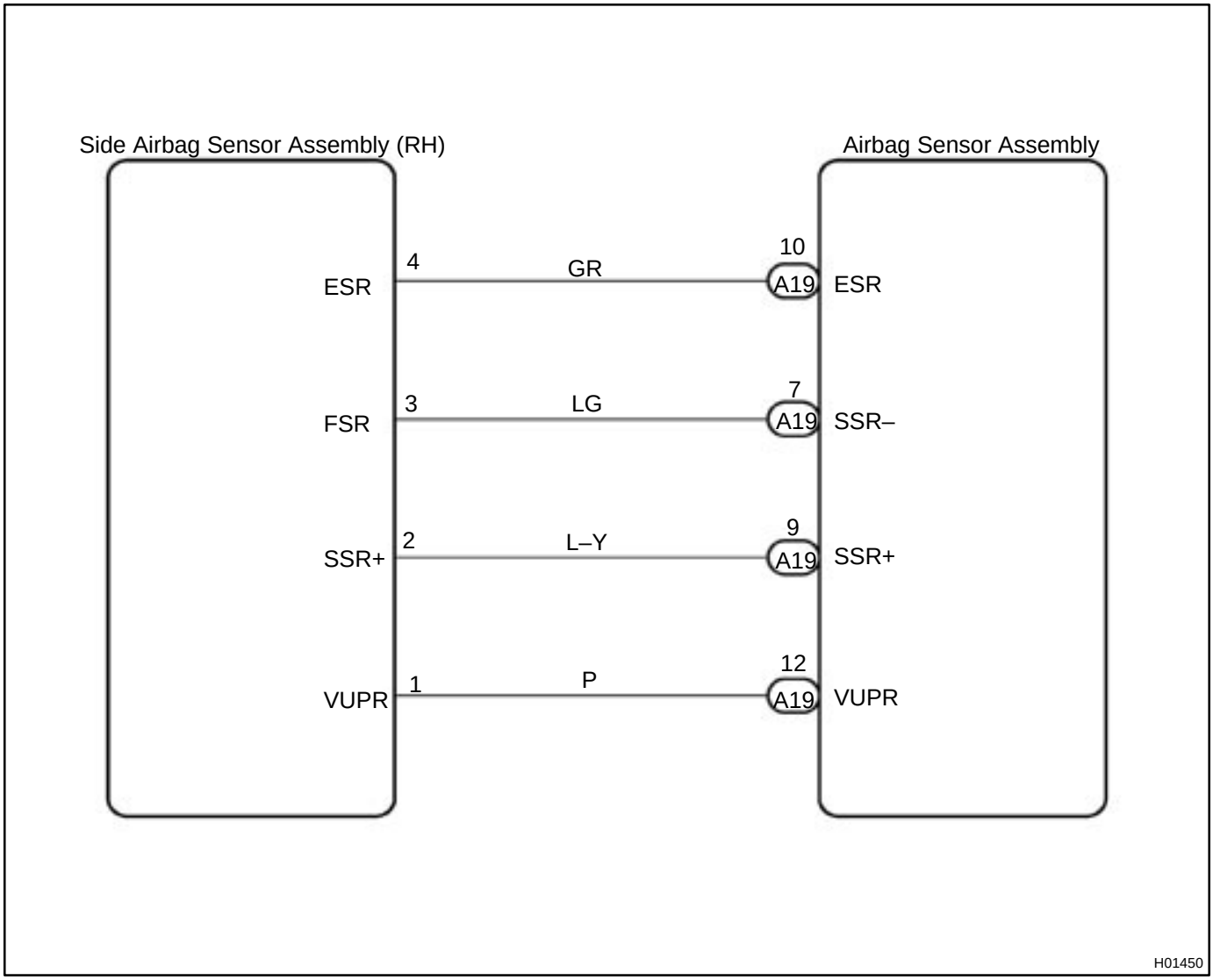

INSPECTION PROCEDURE

1	**Is DTC B1140/32 out put?**

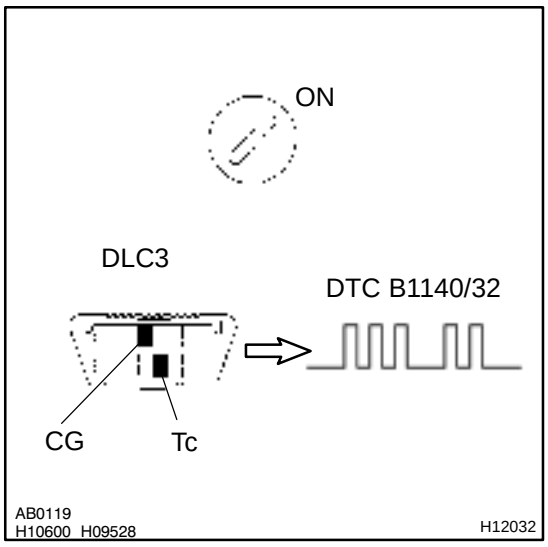

CHECK:

(a) Turn the ignition switch to ON, and wait at least for 20 seconds.
(b) Clear the DTC stored in memory (See page DI–497).
(c) Turn the ignition switch to LOCK, and wait at least for 20 seconds.
(d) Turn the ignition switch to ON, and wait at least for 20 seconds.
(e) Check the DTC (See page DI–497).

HINT:

Codes other than code B1140/32 may be output at this time, but they are not relevant to this check.

YES → **The malfunctioning part can now be considered normal. To make sure of this, use the simulation method to check.**

NO

2	**Is connector of side airbag sensor assembly (RH) properly connected?**

3	**Prepare for inspection (See step 1 on DI–629).**

4	**Check wire harness.**

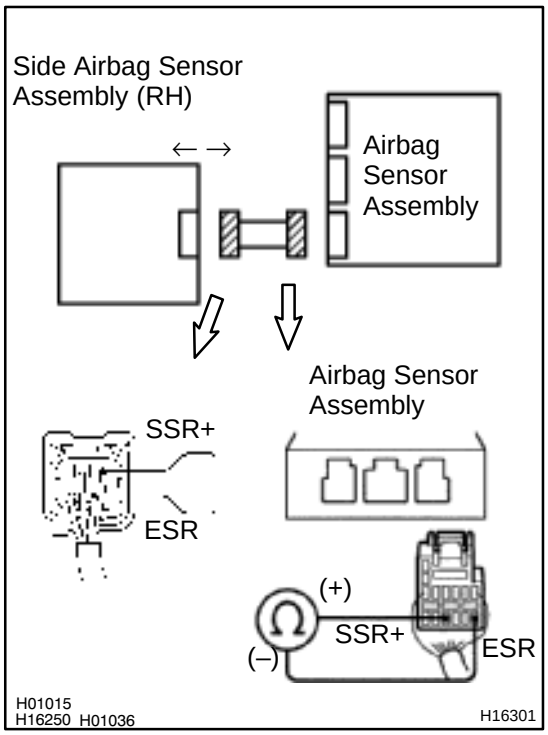

PREPARATION:

(a) Disconnect the side airbag sensor assembly (RH) connector.

(b) Using a service wire, connect SSR+ and ESR of the connector (on the side airbag sensor assembly side) between the side airbag sensor assembly (RH) and airbag sensor assembly.

CHECK:

For the connector (on the airbag sensor assembly side) between the side airbag sensor assembly (RH) and the airbag sensor assembly, measure the resistance between SSR+ and ESR.

OK:

Resistance: Below 1 Ω

NG → **Repair or replace harness or connector between side airbag sensor assembly (RH) and airbag sensor assembly.**

OK

5	**Check wire harness.**

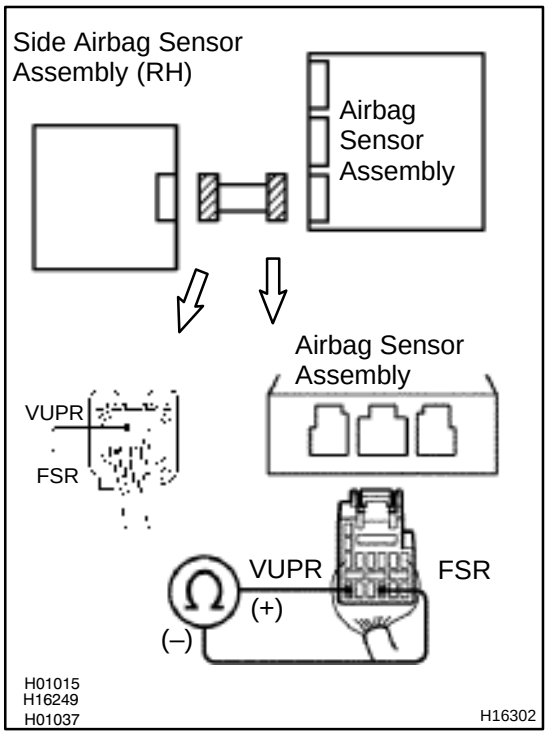

PREPARATION:

Using a service wire, connect VUPR and FSR of the connector (on the side airbag sensor assembly side) between the side airbag sensor assembly (RH) and airbag sensor assembly.

CHECK:

For the connector (on the airbag sensor assembly side) between the side airbag sensor assembly (RH) and the airbag sensor assembly, measure the resistance between VUPR and FSR.

OK:

Resistance: Below 1 Ω

NG → **Repair or replace harness or connector between side airbag sensor assembly (RH) and airbag sensor assembly.**

OK

6	Check wire harness (to ground).

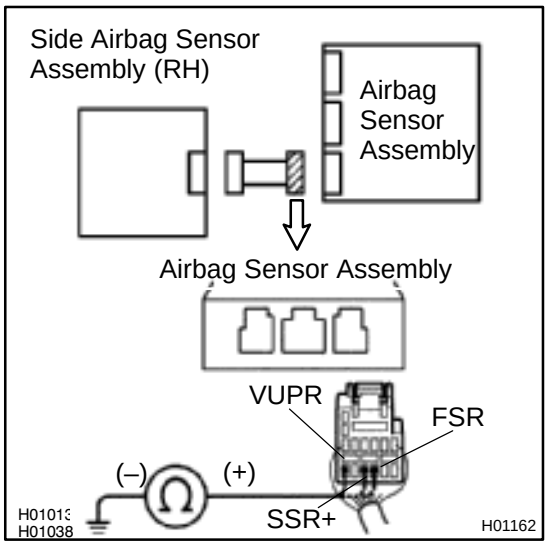

CHECK:

For the connector (on the airbag sensor assembly side) between the side airbag sensor assembly (RH) and the airbag sensor assembly, measure the resistance between body ground and each of SSR+, VUPR and FSR.

OK:

Resistance: Below 1 Ω

NG → **Repair or replace harness or connector between side airbag sensor assembly (RH) and airbag sensor assembly.**

OK

7	Check wire harness (to B+).

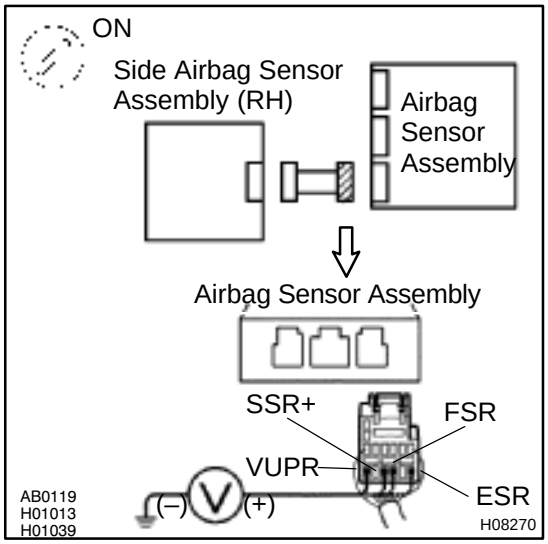

CHECK:

(a) Turn ignition switch to ON.

(b) For the connector (on the airbag sensor assembly side) between the side airbag sensor assembly (RH) and the airbag sensor assembly, measure the voltage between the body ground and each of SSR+, VUPR, ESR and FSR.

OK:

Voltage: 0 V

NG → **Repair or replace harness or connector between side airbag sensor assembly (RH) and airbag sensor assembly.**

OK

8	Is DTC B1140/32 out put again?

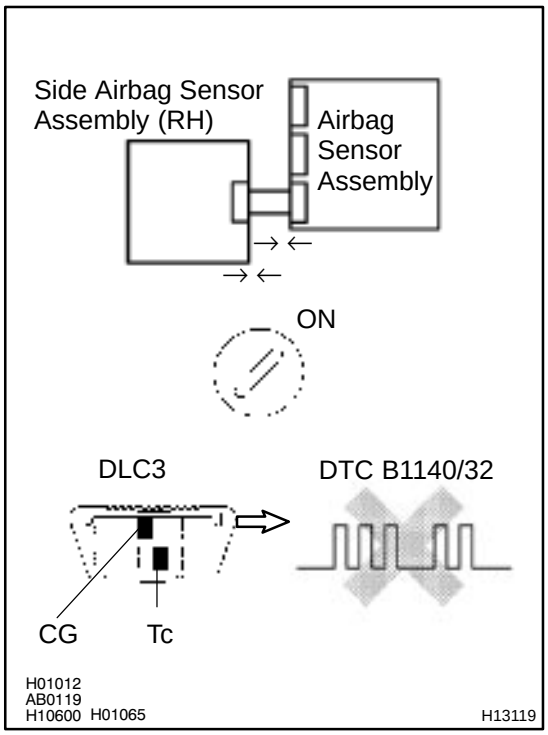

PREPARATION:

(a) Connect the connector to the side airbag sensor assembly (RH).
(b) Connect the connector to the airbag sensor assembly.
(c) Connect negative (–) terminal cable to the battery, and wait at least for 2 seconds.

CHECK:

(a) Turn the ignition switch to ON, and wait at least for 20 seconds.
(b) Clear the DTC stored in memory (See step 5 on page DI–497).
(c) Turn the ignition switch to LOCK, and wait at least for 20 seconds.
(d) Turn the ignition switch to ON, and wait at least for 20 seconds.
(e) Check the DTC (See page DI–497).

OK:

DTC B1140/32 is not output.

HINT:

Codes other than code B1140/32 may be output at this time, but they are not relevant to this check.

NG	Go to step 9.

OK

From the results of the above inspection, the malfunctioning part can now be considered normal. To make sure of this, use the simulation method to check.

9	Check airbag sensor assembly.

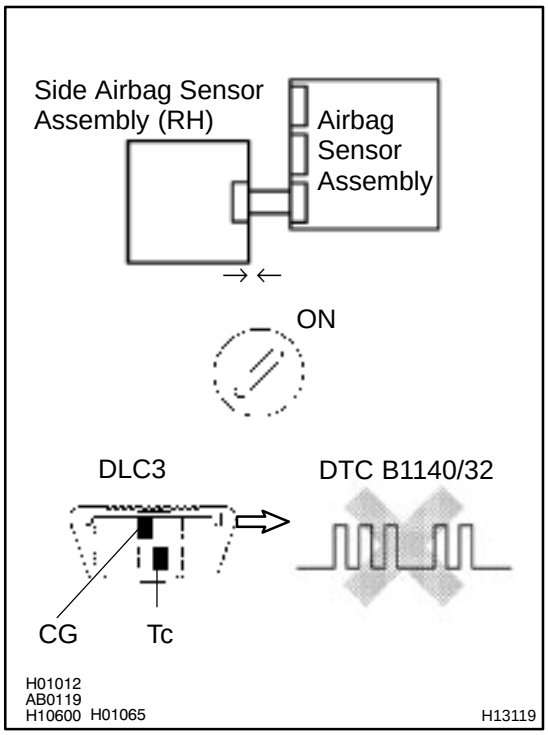

PREPARATION:

(a) Turn the ignition switch to LOCK.

(b) Disconnect negative (–) terminal cable from the battery, and wait at least for 90 seconds.

(c) Disconnect the side airbag sensor (RH) from the connector and connect the side airbag sensor (LH) to the connector.

(d) Connect negative (–) terminal cable to the battery, and wait at least for 2 seconds.

CHECK:

(a) Turn the ignition switch to ON, and wait at least for 20 seconds.

(b) Clear the DTC stored in memory (See step 5 on page DI–497).

(c) Turn the ignition switch to LOCK, and wait at least for 20 seconds.

(d) Turn the ignition switch to ON, and wait at least for 20 seconds.

(e) Check the DTC (See page DI–497).

OK:

DTC B1140/32 is not output.

HINT:

Codes other than code B1140/32 may be output at this time, but they are not relevant to this check.

NG → **Replace airbag sensor assembly.**

OK

10	Check side airbag sensor assembly (RH).

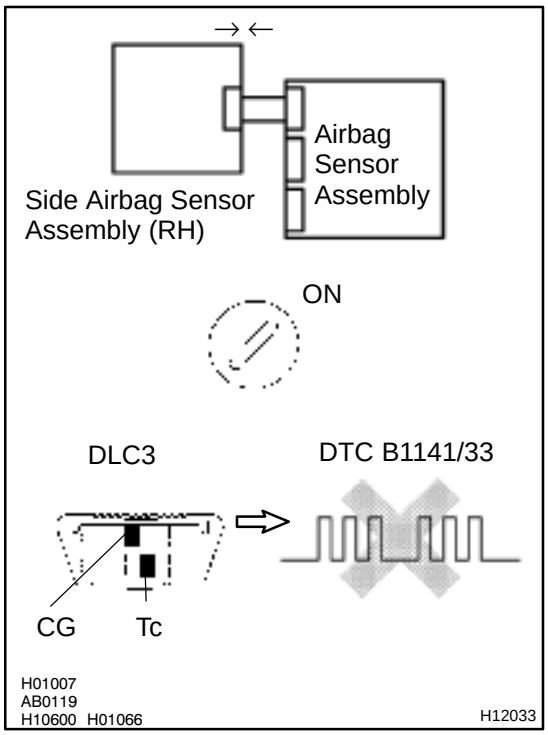

PREPARATION:

(a) Turn the ignition switch to LOCK.
(b) Disconnect negative (–) terminal cable from the battery, and wait at least for 90 seconds.
(c) Connect the side airbag sensor (RH) to the connector that the side airbag sensor (LH) was connected to.
(d) Connect negative (–) terminal cable to the battery, and wait at least for 2 seconds.

CHECK:

(a) Turn the ignition switch to ON, and wait at least for 20 seconds.
(b) Clear the DTC stored in memory (See step 5 on page DI–497).
(c) Turn the ignition switch to LOCK, and wait at least for 20 seconds.
(d) Turn the ignition switch to ON, and wait at least for 20 seconds.
(e) Check the DTC (See page DI–497).

OK:

DTC B1141/33 is not output.

HINT:
Codes other than code B1141/33 may be output at this time, but they are not relevant to this check.

NG → **Replace side airbag sensor assembly (RH).**

OK

From the results of the above inspection, the malfunctioning part can now be considered normal. To make sure of this, use the simulation method to check.

DTC	B1141/33	Side Airbag Sensor Assembly (LH) Malfunction

CIRCUIT DESCRIPTION

The side airbag sensor assembly (LH) consists of the safing sensor, diagnosis circuit and lateral deceleration sensor, etc.
It receives signals from the lateral deceleration sensor, judges whether or not the SRS must be activated, and detects diagnosis system malfunction.
DTC B1141/33 is recorded when occurrence of a malfunction in the side airbag sensor assembly (LH) is detected.

DTC No.	DTC Detecting Condition	Trouble Area
B1141/33	• Side airbag sensor assembly (LH) malfunction	• Side airbag sensor assembly (LH) • Wire harness • Airbag sensor assembly

WIRING DIAGRAM

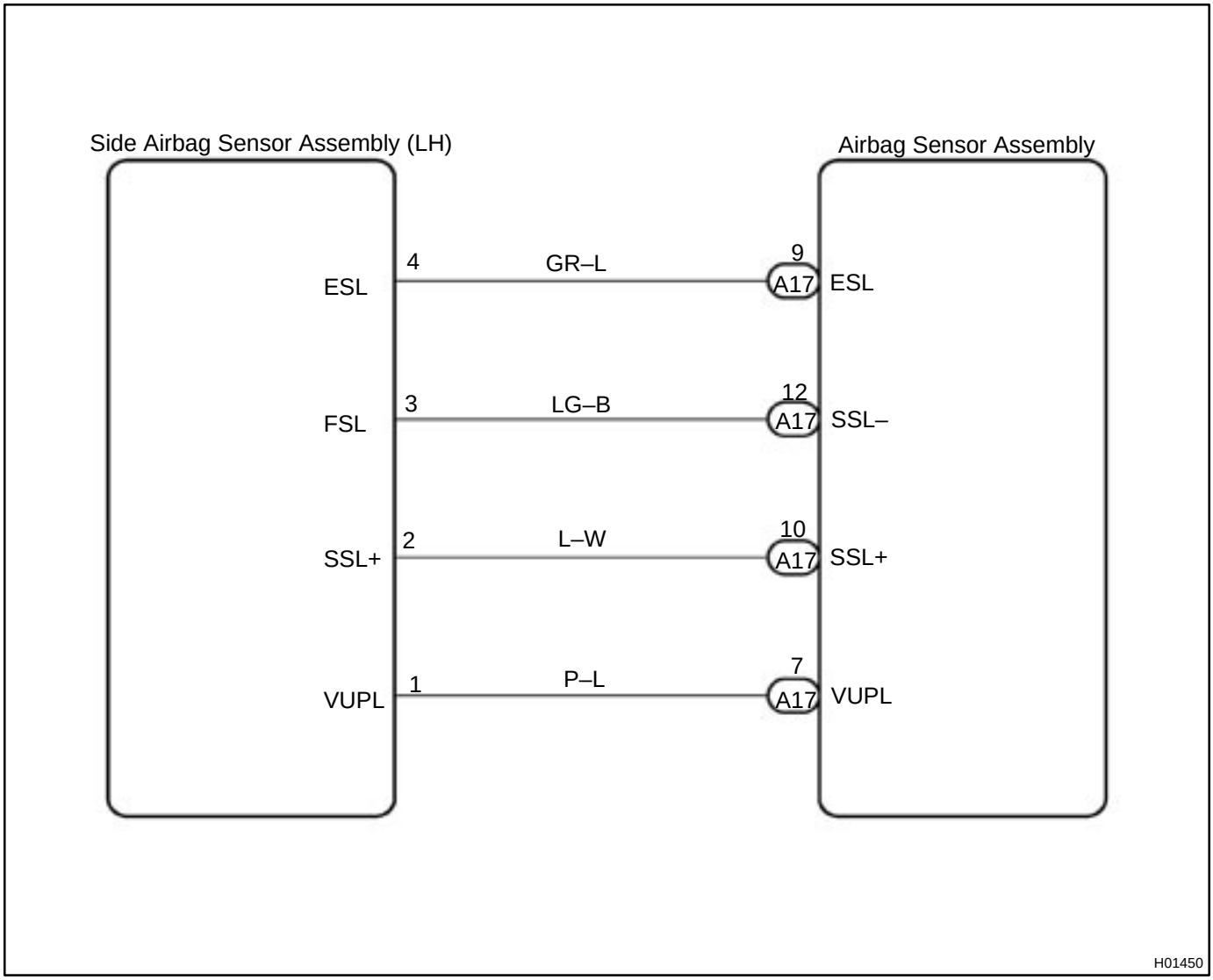

INSPECTION PROCEDURE

1	**Is DTC B1141/33 out put?**

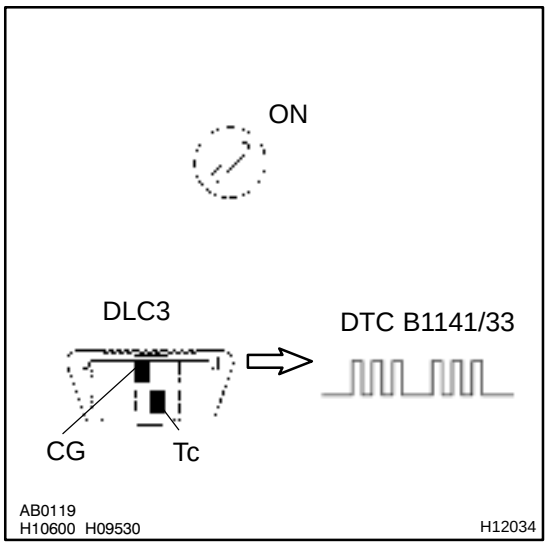

CHECK:

(a) Turn the ignition switch to ON, and wait at least for 20 seconds.

(b) Clear the DTC stored in memory (See step 5 on page DI–497).

(c) Turn the ignition switch to LOCK, and wait at least for 20 seconds.

(d) Turn the ignition switch to ON, and wait at least for 20 seconds.

(e) Check the DTC (See page DI–497).

HINT:

Codes other than code B1141/33 may be output at this time, but they are not relevant to this check.

YES → **The malfunctioning part can now be considered normal. To make sure of this, use the simulation method to check.**

NO

2	**Is connector of side airbag sensor assembly (LH) properly connected?**

3	**Prepare for inspection (See step 1 on page DI–629).**

4	Check wire harness.

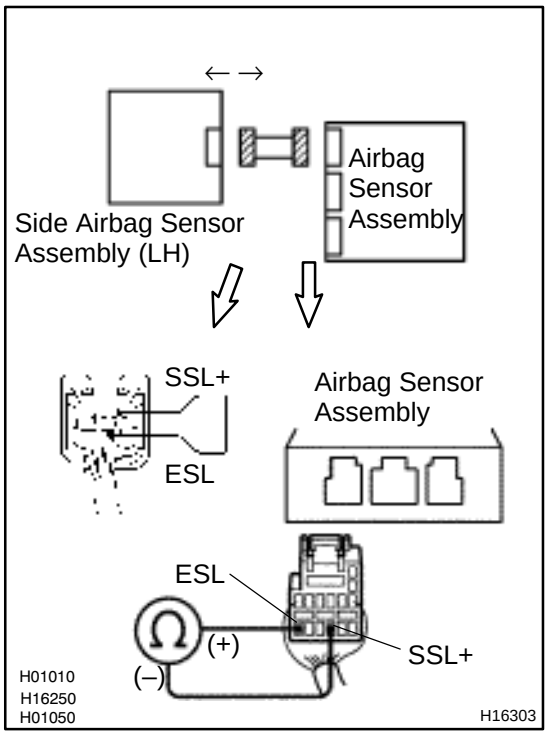

PREPARATION:

(a) Disconnect the side airbag sensor assembly (LH).

(b) Using a service wire, connect SSL+ and ESL of the connector (on the side airbag sensor assembly side) between the side airbag sensor assembly (LH) and the airbag sensor assembly.

CHECK:

For the connector (on the airbag sensor assembly side) between the side airbag sensor assembly (LH) and the airbag sensor assembly, measure the resistance between SSL+ and ESL.

OK:

Resistance: Below 1 Ω

NG → **Repair or replace harness or connector between side airbag sensor assembly (LH) and airbag sensor assembly.**

OK

5	**Check wire harness.**

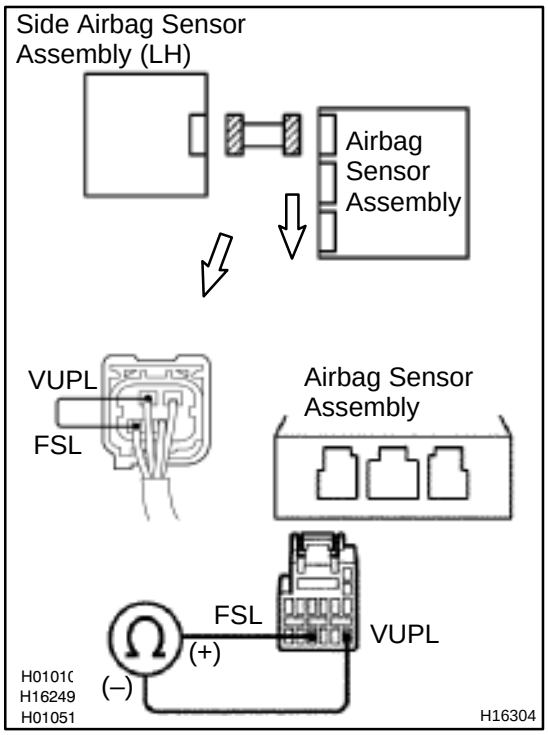

PREPARATION:

Using a service wire, connect VUPL and FSL of the connector (on the side airbag sensor assembly side) between the side airbag sensor assembly (LH) and the airbag sensor assembly.

CHECK:

For the connector (on the airbag sensor assembly side) between the side airbag sensor assembly (LH) and the airbag sensor assembly, measure the resistance between VUPL and FSL.

OK:

Resistance: Below 1 Ω

NG → **Repair or replace harness or connector between side airbag sensor assembly (LH) and airbag sensor assembly.**

OK

6	Check wire harness (to ground).

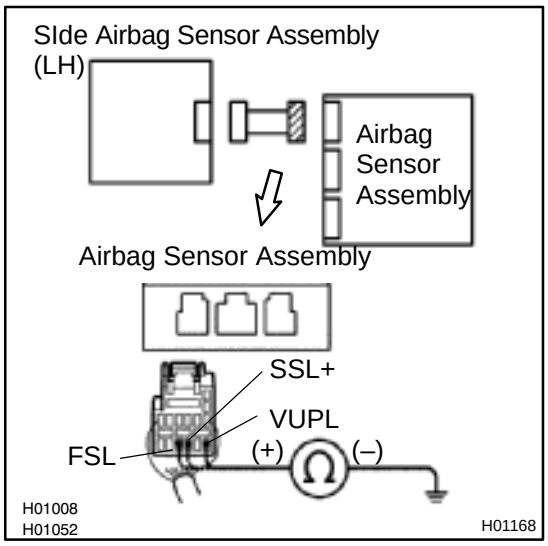

CHECK:

For the connector (on the airbag sensor assembly side) between the side airbag sensor assembly (LH) and the airbag sensor assembly, measure the resistance between body ground and each of SSL+, VUPL and FSL.

OK:

Resistance: 1 MΩ or Higher

NG → **Repair or replace harness or connector between side airbag sensor assembly (LH) and airbag sensor assembly.**

OK

7	Check wire harness (to B+).

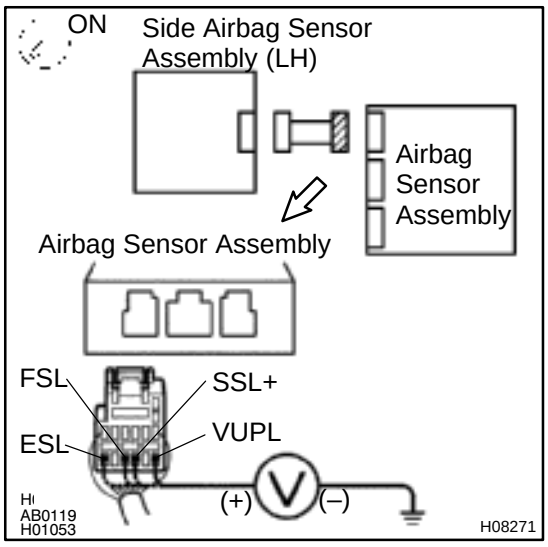

CHECK:

(a) Turn ignition switch to ON.

(b) For the connector (on the airbag sensor assembly side) between the side airbag sensor assembly (LH) and the airbag sensor assembly, measure the voltage between body ground and each of SSL+, ESL, VUPL and FSL.

OK:

Voltage: 0 V

NG → **Repair or replace harness or connector between side airbag sensor assembly (LH) and airbag sensor assembly.**

OK

8	Is DTC B1141/33 out put again?

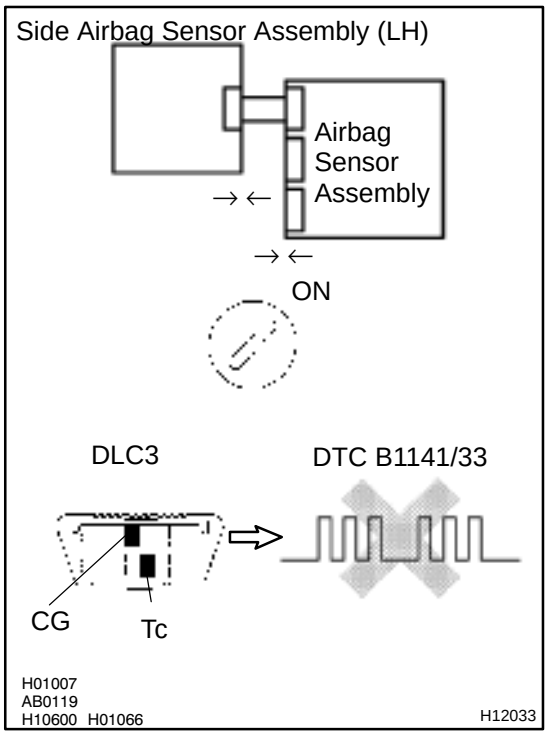

PREPARATION:

(a) Connect the connector to the side airbag sensor assembly (LH).
(b) Connect the connector to the airbag sensor assembly.
(c) Connect negative (–) terminal cable to the battery, and wait at least for 2 seconds.

CHECK:

(a) Turn the ignition switch to ON, and wait at least for 20 seconds.
(b) Clear the DTC stored in memory (See step 5 on page DI–497).
(c) Turn the ignition switch to LOCK, and wait at least for 20 seconds.
(d) Turn the ignition switch to ON, and wait at least for 20 seconds.
(e) Check the DTC (See page DI–497).

OK:

DTC B1141/33 is not output.

HINT:

Codes other than code B1141/33 may be output at this time, but they are not relevant to this check.

NO	Go to step 9.

YES

From the results of the above inspection, the malfunctioning part can now be considered normal. To make sure of this, use the simulation method to check.

9	Check airbag sensor assembly.

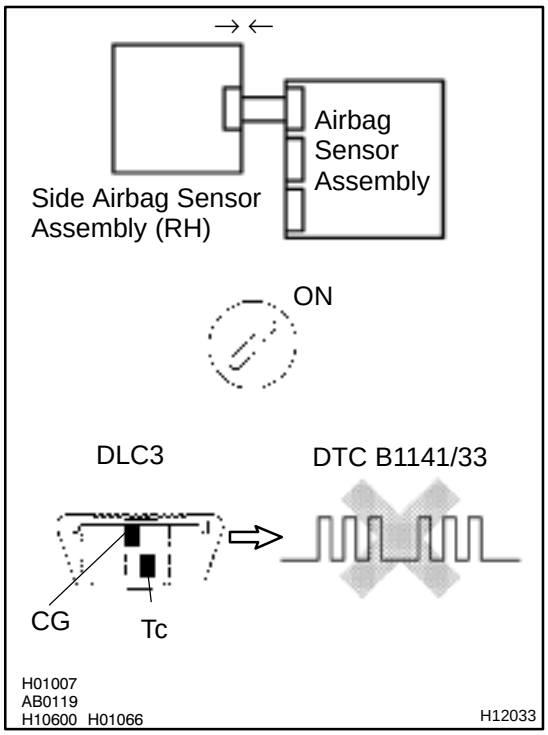

PREPARATION:

(a) Turn the ignition switch to LOCK.
(b) Disconnect negative (–) terminal cable from the battery, and wait at least for 90 seconds.
(c) Disconnect the side airbag sensor (LH) from the connector and connect the side airbag sensor (RH) to the connector.
(d) Connect negative (–) terminal cable to the battery, and wait at least for 2 seconds.

CHECK:

(a) Turn the ignition switch to ON, and wait at least for 20 seconds.
(b) Clear the DTC stored in memory (See step 5 on page DI–497).
(c) Turn the ignition switch to LOCK, and wait at least for 20 seconds.
(d) Turn the ignition switch to ON, and wait at least for 20 seconds.
(e) Check the DTC (See page DI–497).

OK:

DTC B1141/33 is not output.

HINT:
Codes other than code B1141/33 may be output at this time, but they are not relevant to this check.

NG → **Replace airbag sensor assembly.**

OK

10	Check side airbag sensor assembly (LH).

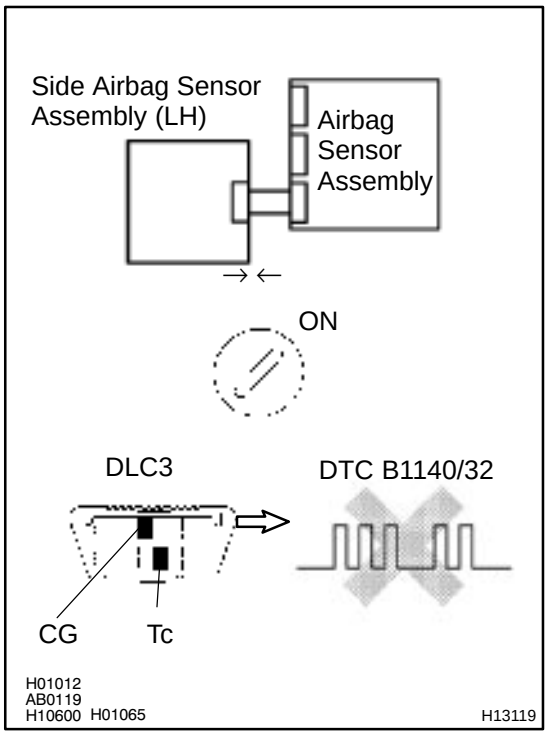

PREPARATION:

(a) Turn the ignition switch to LOCK.
(b) Disconnect negative (–) terminal cable from the battery, and wait at least for 90 seconds.
(c) Connect the side airbag sensor (LH) to the connector that the side airbag sensor (RH) was connected to.
(d) Connect negative (–) terminal cable to the battery, and wait at least for 2 seconds.

CHECK:

(a) Turn the ignition switch to ON, and wait at least for 20 seconds.
(b) Clear the DTC stored in memory (See step 5 on page DI–497).
(c) Turn the ignition switch to LOCK, and wait at least for 20 seconds.
(d) Turn the ignition switch to ON, and wait at least for 20 seconds.
(e) Check the DTC (See page DI–497).

OK:

DTC B1140/32 is not output.

HINT:

Codes other than code B1140/32 may be output at this time, but they are not relevant to this check.

NG → **Replace side airbag sensor assembly (LH).**

OK →

From the results of the above inspection, the malfunctioning part can now be considered normal. To make sure of this, use the simulation method to check.

DI6PW–06

DTC	B1156/B1157/15	Front Airbag Sensor (RH) Malfunction

CIRCUIT DESCRIPTION

The front airbag sensor (RH) circuit consists of the airbag sensor assembly and front airbag sensor (RH). For details of the function of each component, see OPERATION on page RS–2.

DTC B1156/B1157/15 is recorded when a malfunction is detected in the front airbag sensor (RH) circuit.

DTC No.	DTC Detecting Condition	Trouble Area
B1156/B1157/15	• Front airbag sensor (RH) malfunction	• Front airbag sensor (RH) • Airbag sensor assembly • Wire harness • Engine room No. 2 wire harness

WIRING DIAGRAM

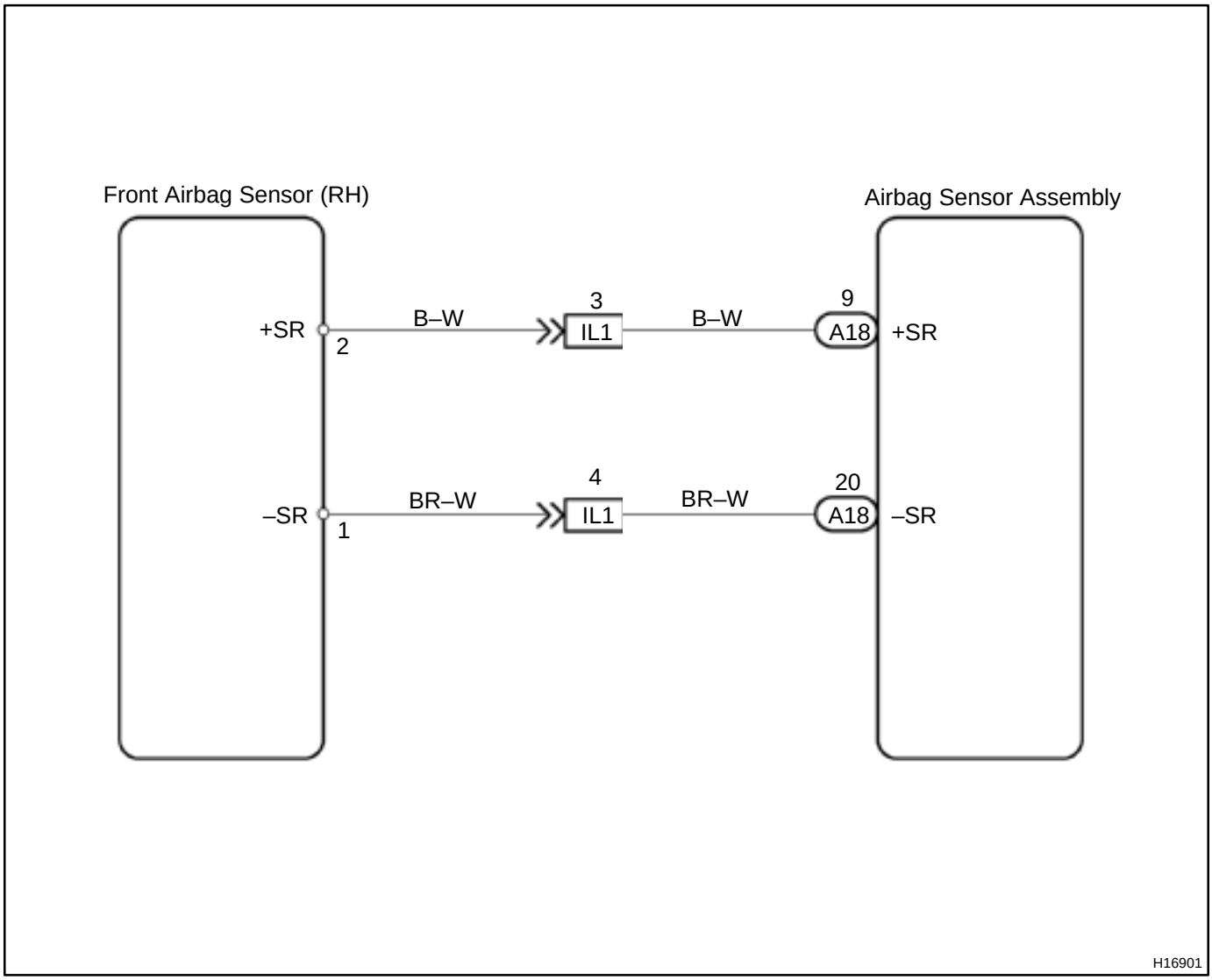

INSPECTION PROCEDURE

1	**Prepare for inspection (See step 1 on page DI–629).**

2	**Check wire harness (to B+).**

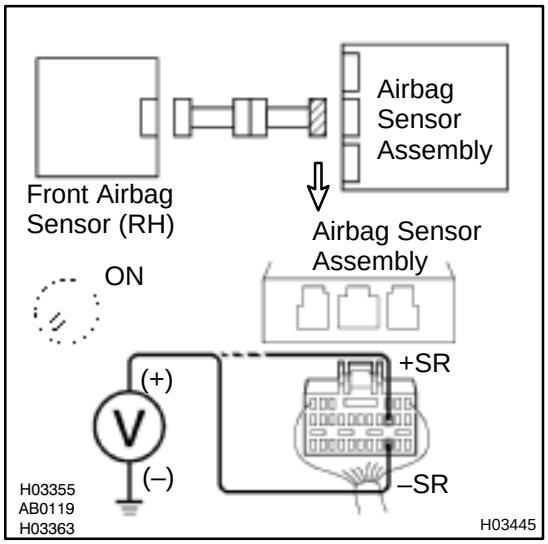

CHECK:

(a) Turn the ignition switch to ON.

(b) For the connector (on the airbag sensor assembly side) between the front airbag sensor (RH) and the airbag sensor assembly, measure the voltage between body ground and each of +SR and –SR.

OK:

Voltage: Below 1 V

NG → **Go to step 8.**

OK

3	**Check wire harness (to ground).**

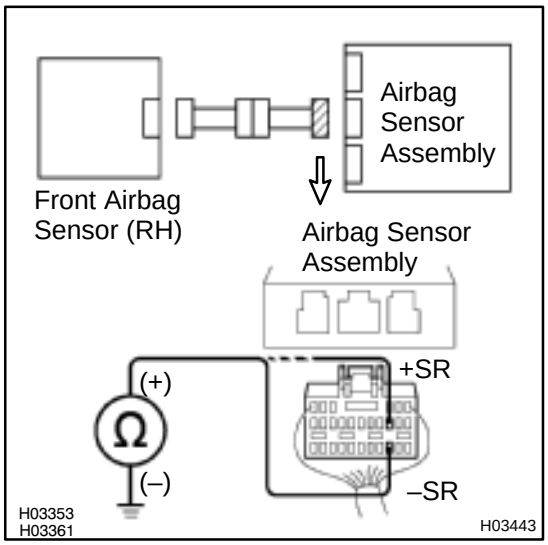

CHECK:

For the connector (on the airbag sensor assembly side) between the front airbag sensor (RH) and the airbag sensor assembly, measure the resistance between body ground and each of +SR and –SR.

OK:

Resistance: 1 MΩ or Higher

NG → **Go to step 9.**

OK

4	Check wire harness.

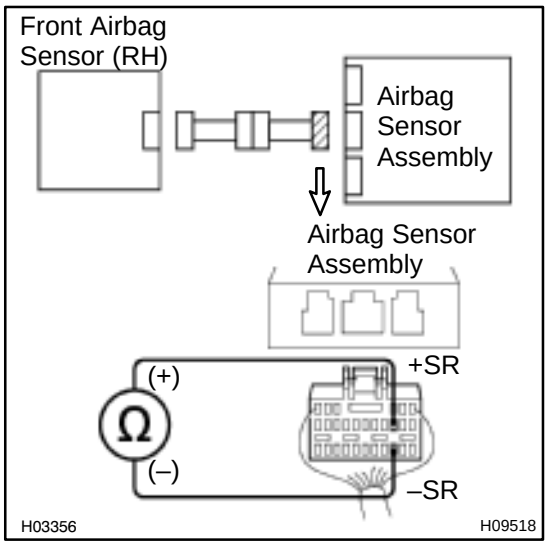

CHECK:

For the connector (on the airbag sensor assembly side) between the front airbag sensor (RH) and the airbag sensor assembly, measure the resistance between +SR and –SR.

OK:

Resistance: 1 MΩ or Higher

NG → **Go to step 10.**

OK

5	Check wire harness.

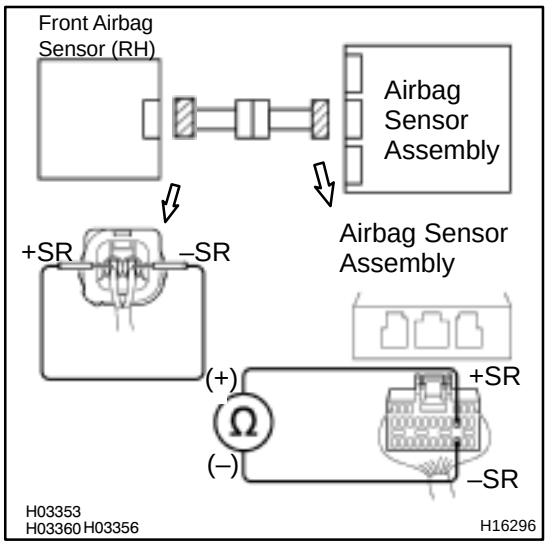

PREPARATION:

Using a service wire, connect +SR and –SR of the connector (on the front airbag sensor (RH) side) between the airbag sensor assembly and the front airbag sensor (RH).

CHECK:

For the connector (on the airbag sensor assembly side) between the front airbag sensor (RH) and the airbag sensor assembly, measure the resistance between +SR and –SR.

OK:

Resistance: Below 1 Ω

NG → **Go to step 11.**

OK

6	**Check front airbag sensor (RH).**

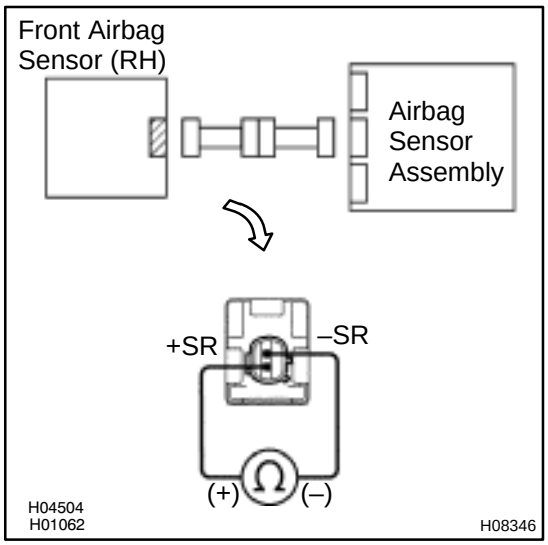

CHECK:

For the connector of the front airbag sensor (RH), measure the resistance between +SR and –SR.

OK:

Resistance: 300 – 1500 Ω

NG → **Replace front airbag sensor (RH).**

OK

7	Check airbag sensor assembly.

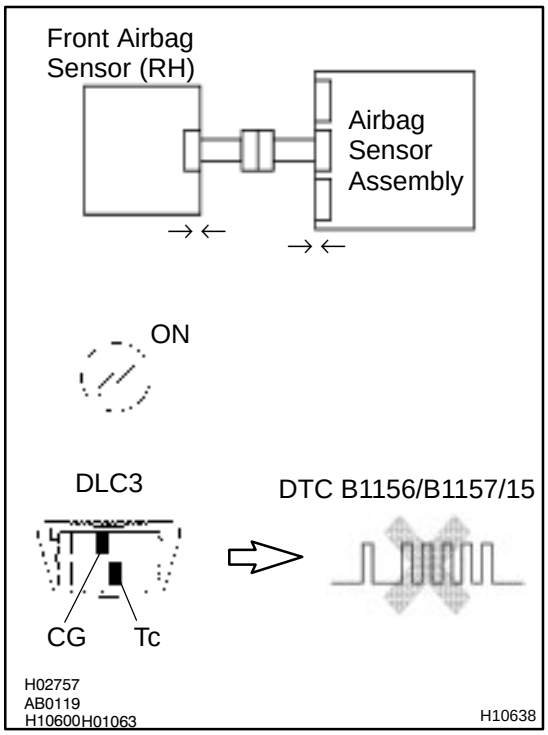

PREPARATION:

(a) Turn the ignition switch to LOCK.
(b) Disconnect negative (–) terminal cable from the battery, and wait at least for 90 seconds.
(c) Connect the front airbag sensor (RH) connector and airbag sensor assembly connector.
(d) Connect negative (–) terminal cable to the battery, and wait at least for 2 seconds.

CHECK:

(a) Turn the ignition switch to ON, and wait at least for 20 seconds.
(b) Clear the DTC stored in memory (See page DI–497).
(c) Turn the ignition switch to LOCK, and wait at least for 20 seconds.
(d) Turn the ignition switch to ON, and wait at least for 20 seconds.
(e) Check the DTC (See page DI–497).

OK:

DTC B1156/B1157/15 is not output.

HINT:
Codes other than code B1156/B1157/15 may be output at this time, but they are not relevant to this check.

NG → **Replace airbag sensor assembly.**

OK

From the results of the above inspection, the malfunctioning part can now be considered normal. To make sure of this, use the simulation method to check.

8	Check engine room No. 2 wire harness (to B+).

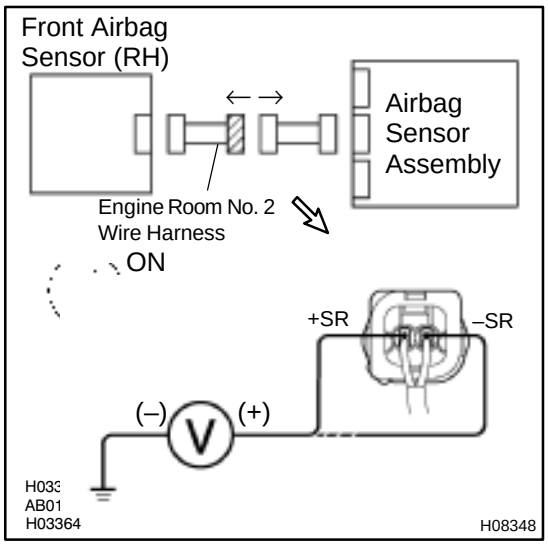

PREPARATION:

Disconnect the engine room No. 2 wire harness connector on the airbag sensor assembly side.

CHECK:

(a) Turn the ignition switch to ON.

(b) For the connector (on the RH front door wire harness side) between the airbag sensor assembly and the engine room No. 2 wire harness, measure the voltage between body ground and each of +SR and –SR.

OK:

Voltage: Below 1 V

NG	Repair or replace engine room No. 2 wire harness.

OK

Repair or replace harness or connector between airbag sensor assembly and engine room No. 2 wire harness.

9	Check engine room No. 2 wire harness (to ground).

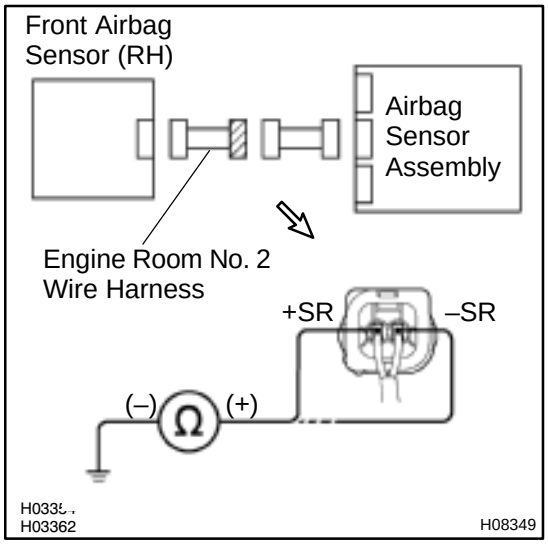

PREPARATION:

Disconnect the engine room No. 2 wire harness connector on the airbag sensor assembly side.

CHECK:

For the connector (on the engine room No. 2 wire harness side) between the airbag sensor assembly and the engine room No. 2 wire harness, measure the resistance between body ground and each of +SR and –SR.

OK:

Resistance: 1 MΩ or Higher

NG	Repair or replace engine room No. 2 wire harness.

OK

Repair or replace harness or connector between airbag sensor assembly and engine room No. 2 wire harness.

10	Check engine room No. 2 wire harness.

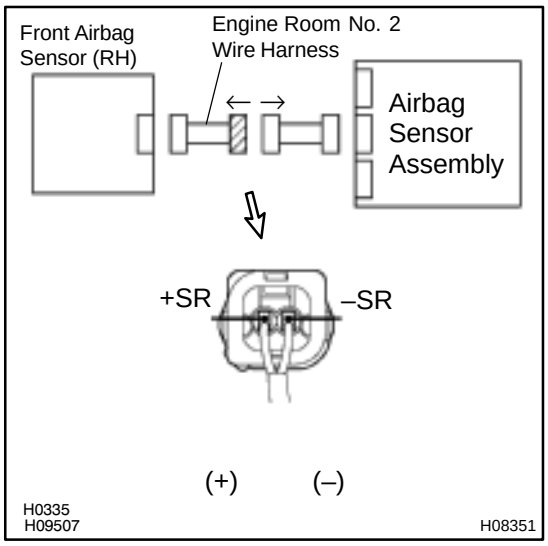

PREPARATION:

Disconnect the engine room No. 2 wire harness connector on the airbag sensor assembly side.

CHECK:

For the connector (on the engine room No. 2 wire harness side) between the airbag sensor assembly and the engine room No. 2 wire harness, measure the resistance between +SR and –SR.

OK:

Resistance: 1 MΩ or Higher

NG → **Repair or replace engine room No. 2 wire harness.**

OK

Repair or replace harness or connector between airbag sensor assembly and engine room No. 2 wire harness.

11	Check engine room No. 2 wire harness.

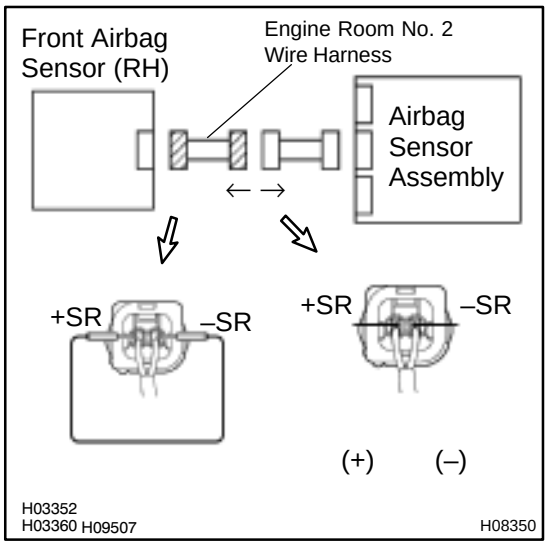

PREPARATION:

(a) Disconnect the engine room No. 2 wire harness connector on the airbag sensor assembly side.

(b) Using a service wire, connect +SR and –SR of the connector (on the engine room No. 2 wire harness side) between the engine room No. 2 wire harness and the front airbag sensor (RH).

CHECK:

For the connector (on the engine room No. 2 wire harness side) between the airbag sensor assembly and the engine room No. 2 wire harness, measure the resistance between +SR and –SR.

OK:

Resistance: Below 1 Ω

NG → **Repair or replace engine room No. 2 wire harness.**

OK

Repair or replace harness or connector between airbag sensor assembly and engine room No. 2 wire harness.

DI6PX–06

DTC	B1158/B1159/16	Front Airbag Sensor (LH) Malfunction

CIRCUIT DESCRIPTION

The front airbag sensor (LH) circuit consists of the airbag sensor assembly and front airbag sensor (LH).
For details of the function of each component, see OPERATION on page RS–2.
DTC B1158/B1159/16 is recorded when malfunction is detected in the front airbag sensor (LH) circuit.

DTC No.	DTC Detecting Condition	Trouble Area
B1158/B1159/16	• Front airbag sensor (LH) malfunction	• Front airbag sensor (LH) • Airbag sensor assembly • Wire harness • Engine room main wire harness

WIRING DIAGRAM

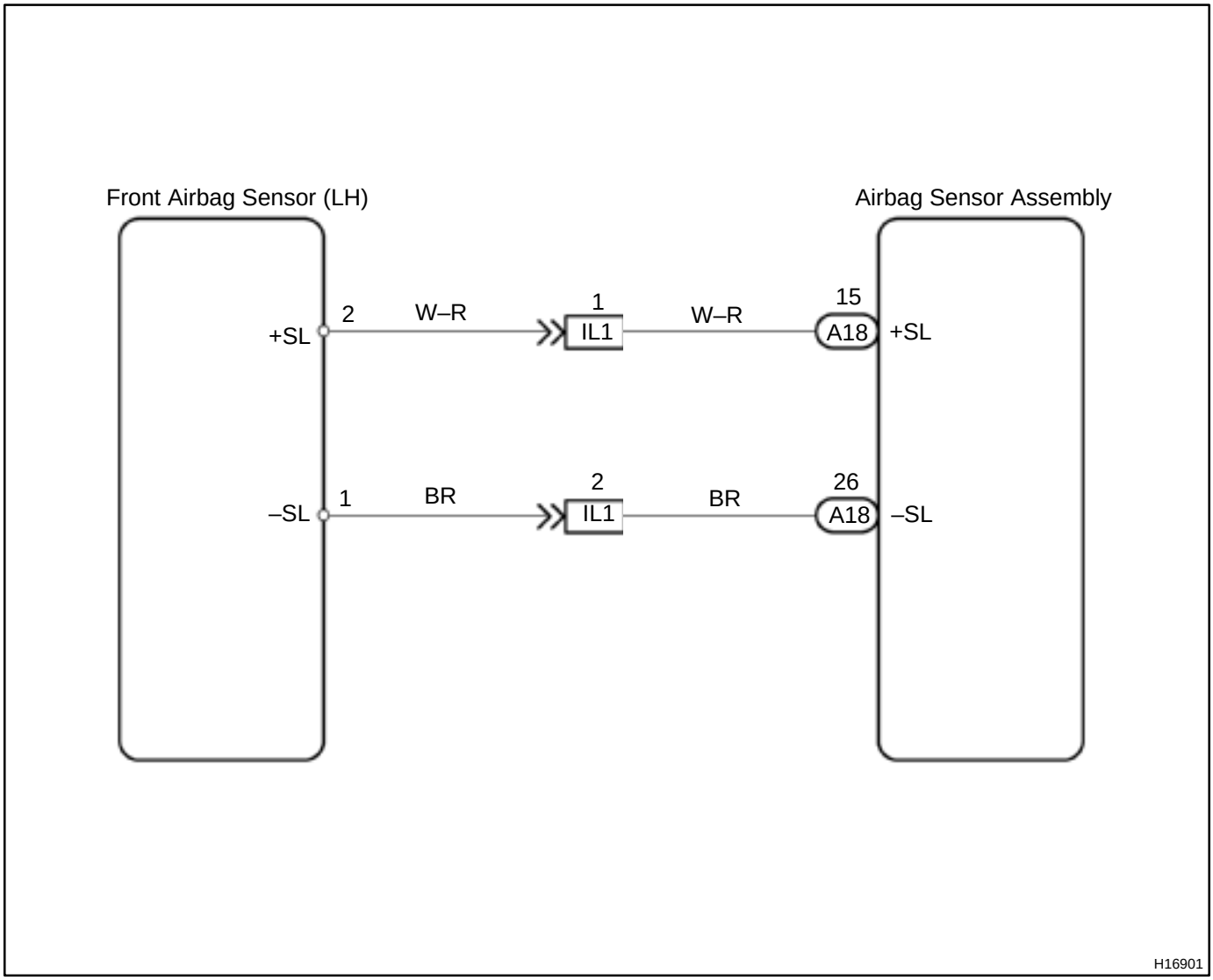

INSPECTION PROCEDURE

1	**Prepare for inspection (See step 1 on page DI–629).**

2	**Check wire harness (to B+).**

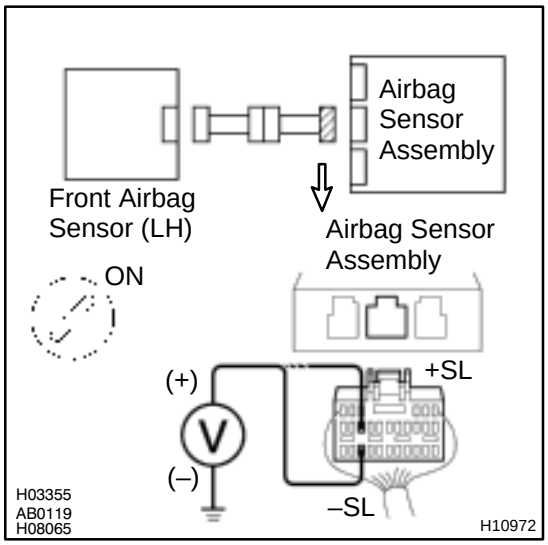

CHECK:

(a) Turn the ignition switch to ON.

(b) For the connector (on the airbag sensor assembly side) between the front airbag sensor (LH) and the airbag sensor assembly, measure the voltage between body ground and each of +SL and –SL.

OK:

Voltage: Below 1 V

NG → **Go to step 8.**

OK

3	**Check wire harness (to ground).**

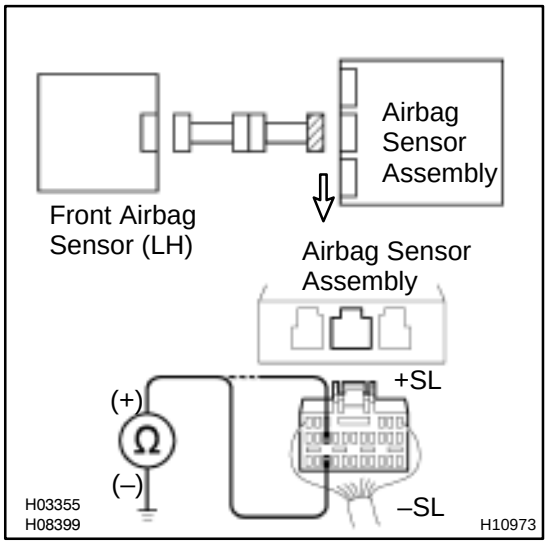

CHECK:

For the connector (on the airbag sensor assembly side) between the front airbag sensor (LH) and the airbag sensor assembly, measure the resistance between body ground and each of +SL and –SL.

OK:

Resistance: 1 MΩ or Higher

NG → **Go to step 9.**

OK

4	Check wire harness.

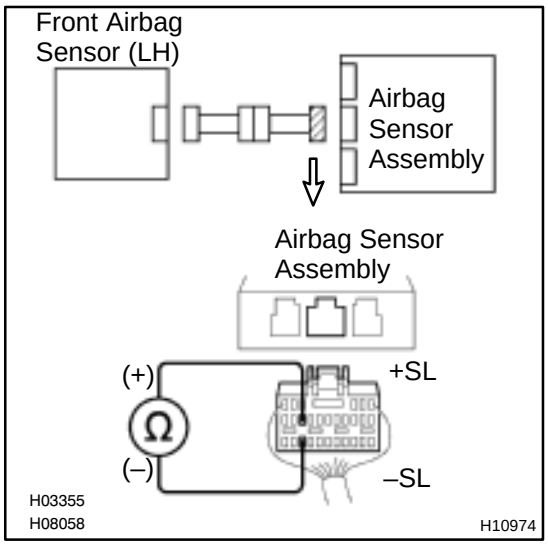

CHECK:

For the connector (on the airbag sensor assembly side) between the front airbag sensor (LH) and the airbag sensor assembly, measure the resistance between +SL and –SL.

OK:

Resistance: 1 MΩ or Higher

NG → **Go to step 10.**

OK

5	Check wire harness.

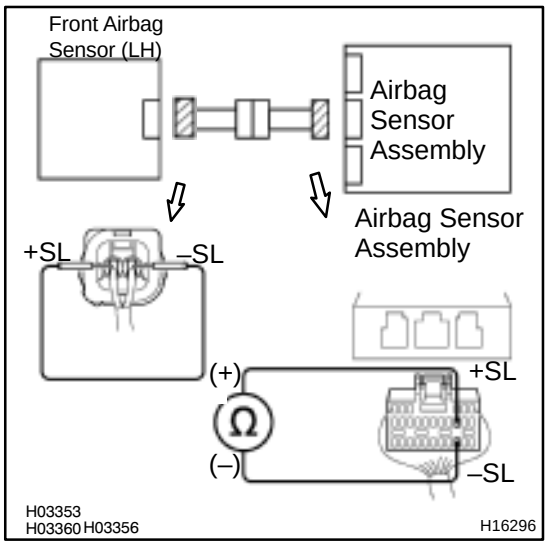

PREPARATION:

Using a service wire, connect +SL and –SL of the connector (on the front airbag sensor (LH) side) between the airbag sensor assembly and the front airbag sensor (LH).

CHECK:

For the connector (on the airbag sensor assembly side) between the front airbag sensor (LH) and the airbag sensor assembly, measure the resistance between +SL and –SL.

OK:

Resistance: Below 1 Ω

NG → **Go to step 11.**

OK

6	Check front airbag sensor (LH).

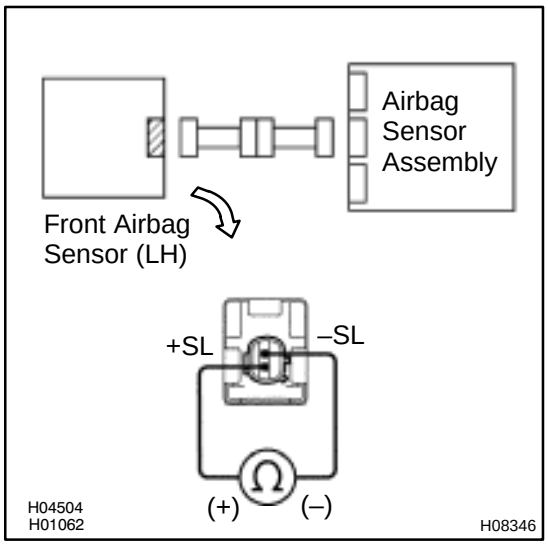

CHECK:

For the connector (on the front airbag sensor (LH)), measure the resistance between +SL and –SL.

OK:

Resistance: 300 – 1500 Ω

NG → **Replace front airbag sensor (LH).**

OK

7	Check airbag sensor assembly.

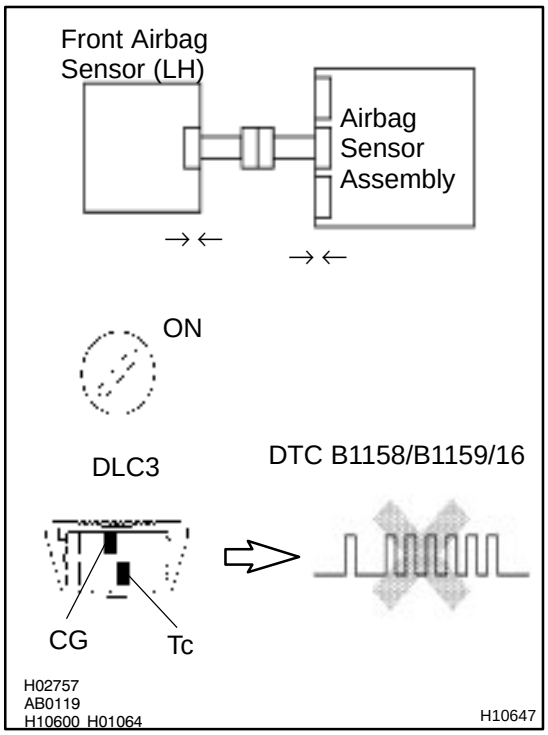

PREPARATION:

(a) Turn the ignition switch to LOCK.
(b) Disconnect negative (–) terminal cable from the battery, and wait at least for 90 seconds.
(c) Connect the front airbag sensor (LH) connector and airbag sensor assembly connector.
(d) Connect negative (–) terminal cable to the battery, and wait at least for 2 seconds.

CHECK:

(a) Turn the ignition switch to ON, and wait at least for 20 seconds.
(b) Clear the DTC stored in memory (See page DI–497).
(c) Turn the ignition switch to LOCK, and wait at least for 20 seconds.
(d) Turn the ignition switch to ON, and wait at least for 20 seconds.
(e) Check the DTC (See page DI–497).

OK:

DTC B1158/B1159/16 is not output.

HINT:
Codes other than code B1158/B1159/16 may be output at this time, but they are not relevant to this check.

NG → **Replace airbag sensor assembly.**

OK

From the results of the above inspection, the malfunctioning part can now be considered normal. To make sure of this, use the simulation method to check.

8	Check engine room main wire harness (to B+).

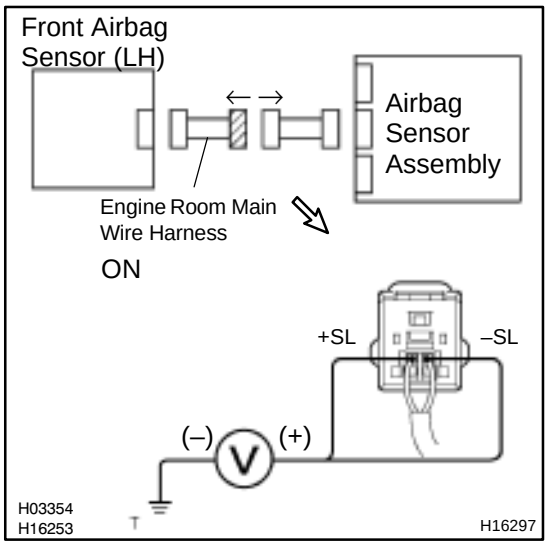

PREPARATION:

Disconnect the engine room main wire harness connector on the airbag sensor assembly side.

CHECK:

(a) Turn the ignition switch to ON.

(b) For the connector (on the LH front door wire harness side) between the airbag sensor assembly and the engine room main wire harness, measure the voltage between body ground and each of +SL and –SL.

OK:

Voltage: Below 1 V

NG	Repair or replace engine room main wire harness.

OK

Repair or replace harness or connector between airbag sensor assembly and engine room main wire harness.

9	Check engine room main wire harness (to ground).

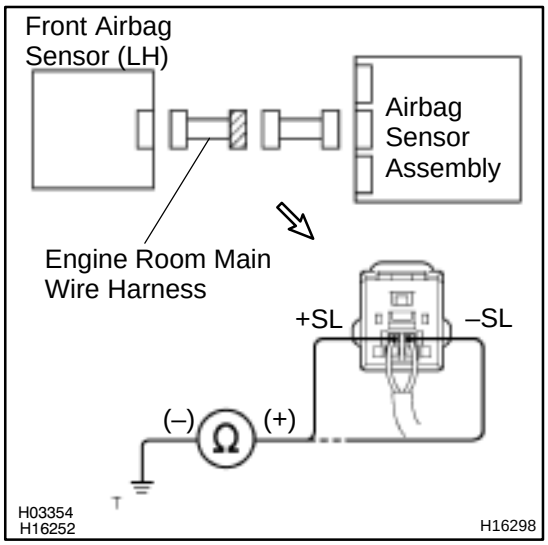

PREPARATION:

Disconnect the engine room main wire harness connector on the airbag sensor assembly side.

CHECK:

For the connector (on the engine room main wire harness side) between the airbag sensor assembly and the engine room main wire harness, measure the resistance between body ground and each of +SL and –SL.

OK:

Resistance: 1 MΩ or Higher

NG	Repair or replace engine room main wire harness.

OK

Repair or replace harness or connector between airbag sensor assembly and engine room main wire harness.

10	Check engine room main wire harness.

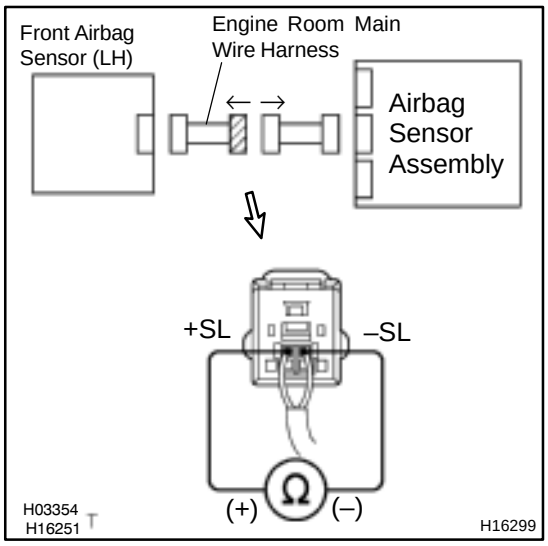

PREPARATION:

Disconnect the engine room main wire harness connector on the airbag sensor assembly side.

CHECK:

For the connector (on the engine room main wire harness side) between the airbag sensor assembly and the engine room main wire harness, measure the resistance between +SL and –SL.

OK:

Resistance: 1 MΩ or Higher

NG → **Repair or replace engine room main wire harness.**

OK

Repair or replace harness or connector between airbag sensor assembly and engine room main wire harness.

11	Check engine room main wire harness.

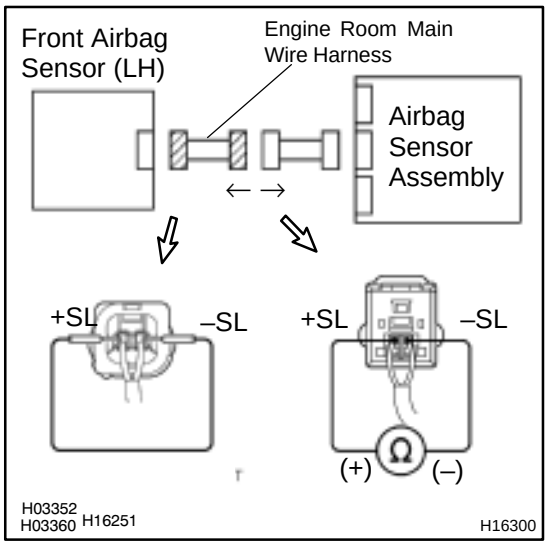

PREPARATION:

(a) Disconnect the engine room main wire harness connector on the airbag sensor assembly side.

(b) Using a service wire, connect +SL and –SL of the connector (on the engine room main wire harness side) between the engine room main wire harness and the front airbag sensor (LH).

CHECK:

For the connector (on the engine room main wire harness side) between the airbag sensor assembly and the engine room main wire harness, measure the resistance between +SL and –SL.

OK:

Resistance: Below 1 Ω

NG → **Repair or replace engine room main wire harness.**

OK

Repair or replace harness or connector between airbag sensor assembly and engine room main wire harness.

DI6PY–07

DTC	Normal	Source Voltage Drop

CIRCUIT DESCRIPTION

The SRS is equipped with a voltage–increase circuit (DC–DC converter) in the airbag sensor assembly in case the source voltage drops.
When the battery voltage drops, the voltage–increase circuit (DC–DC converter) functions to increase the voltage of the SRS to normal voltage.
The diagnosis system malfunction display for this circuit is different from other circuits that is when the SRS warning light remains lit up and the DTC is a normal code, source voltage drop is indicated.
Malfunction in this circuit is not recorded in the airbag sensor assembly, and the source voltage returns to normal, the SRS warning light automatically goes off.

DTC No.	Diagnosis
(Normal)	Source voltage drop

WIRING DIAGRAM

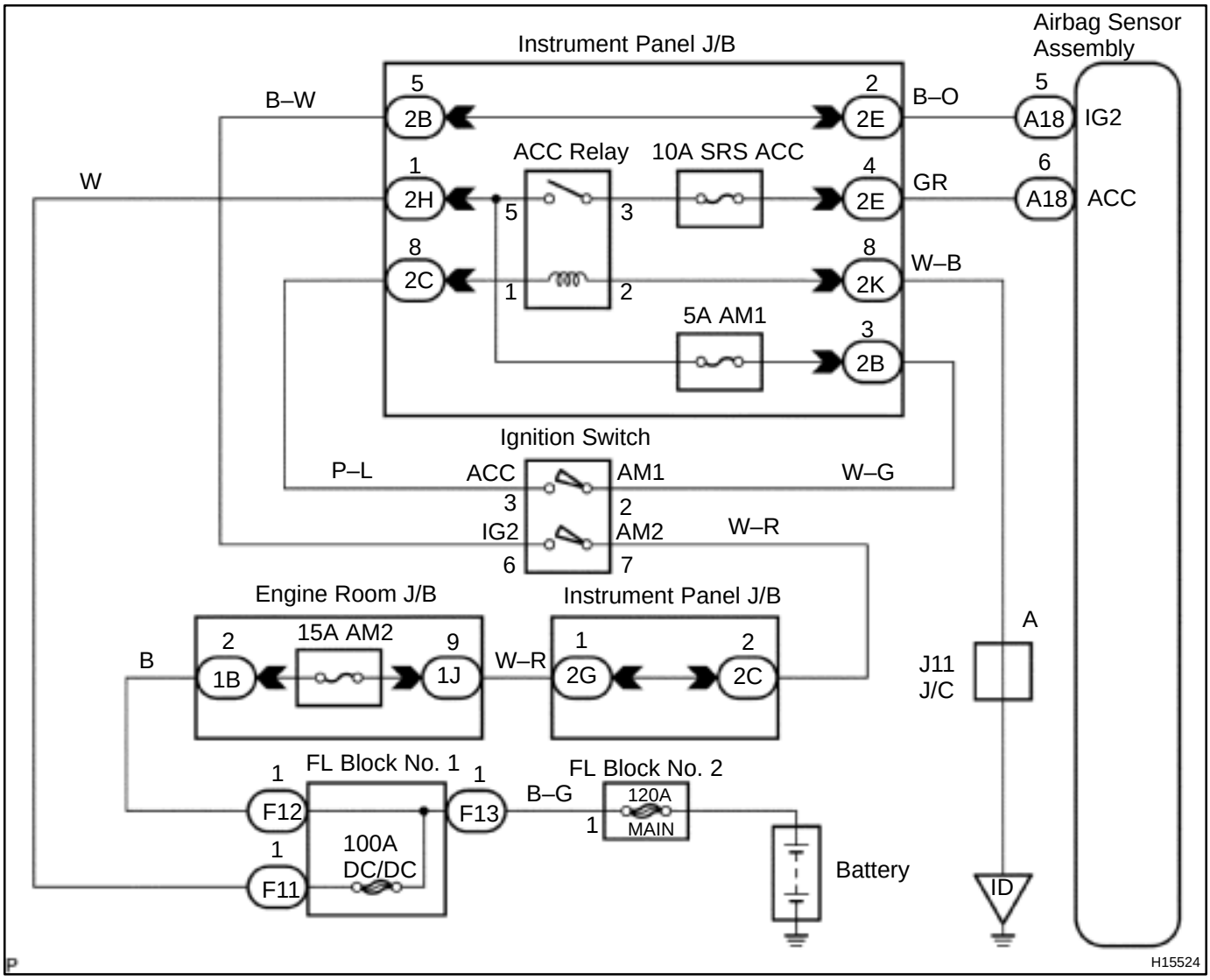

INSPECTION PROCEDURE

1	**Prepare for inspection.**

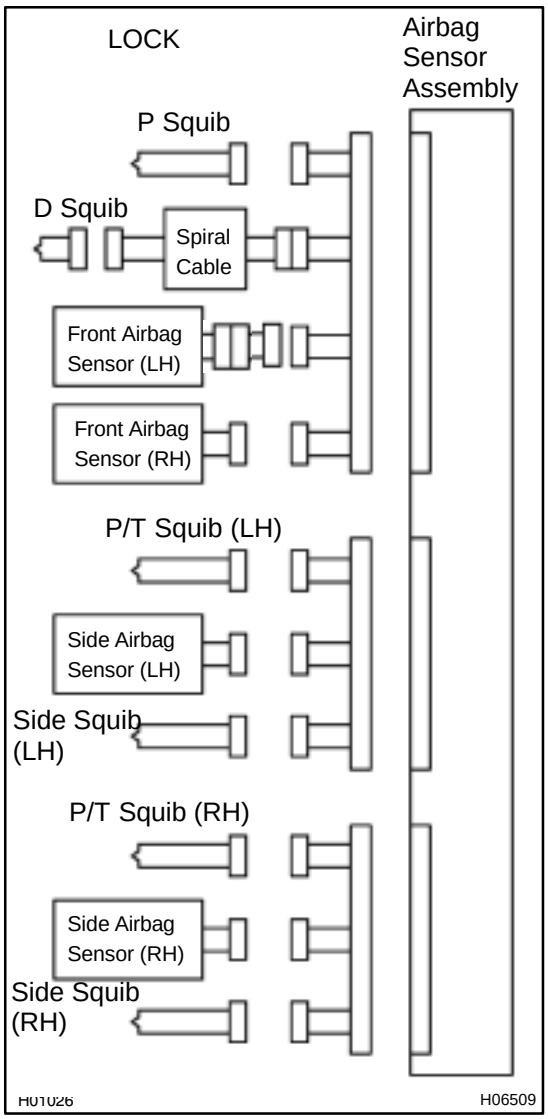

PREPARATION:

(a) Disconnect negative (–) terminal cable from the battery, and wait at least for 90 seconds.

(b) Remove the steering wheel pad (See page SR–6).

(c) Disconnect the connector of the front passenger airbag assembly (See page RS–27).

(d) Disconnect the connector of the side airbag assembly RH and LH (See page RS–40).

(e) Disconnect the connector of the seat belt pretensioner RH and LH (See page BO–90).

(f) Disconnect the connectors of the airbag sensor assembly (See page RS–52).

(g) Disconnect the connector of the front airbag sensor RH and LH (See page RS–57).

(h) Disconnect the connector of the side airbag sensor assembly RH and LH (See page RS–62).

CAUTION:

Store the steering wheel pad, front passenger airbag assembly and side airbag assemlby with the front surface facing upward.

2	Check source voltage.

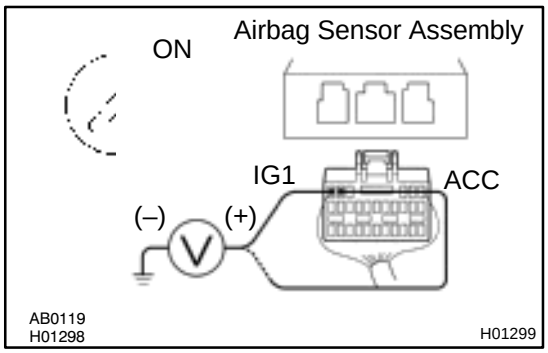

PREPARATION:

Connect negative (–) terminal cable to the battery.

CHECK:

(a) Turn ignition switch ON.

(b) Measure the voltage between body ground and each of IG1 and IG2 on the sensor and operate electric system (defogger, wiper, headlight, heater blower, etc.).

OK:

Voltage: 10 – 14 V

NG → **Check harness between battery and airbag sensor assembly, and check battery and charging system.**

OK

3	Does SRS warning light turn off?

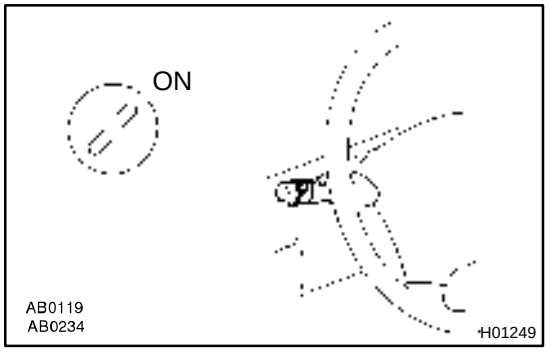

PREPARATION:

(a) Turn the ignition switch to LOCK.

(b) Connect the steering wheel pad connector.

(c) Connect the front passenger airbag assembly connector.

(d) Connect the side airbag assembly connectors.

(e) Connect the seat belt pretensioner connectors.

(f) Connect the airbag sensor assembly connectors.

(g) Connect the front airbag sensor connectors.

(h) Connect the side airbag sensor assembly connectors.

(i) Turn the ignition switch to ON.

CHECK:

Operate electric system (defogger, wiper, headlight, heater blower, etc.) and check that SRS warning light goes off.

NO → **Check for DTCs. If a DTC is output, perform troubleshooting for the DTC. If a normal code is output, replace airbag sensor assembly.**

YES

From the results of the above inspection, the malfunctioning part can now be considered normal. To make sure of this, use the simulation method to check.

DI7QT–01

SRS Warning Light Circuit Malfunction

CIRCUIT DESCRIPTION

The SRS warning light is located on the combination meter.
When the SRS is normal, the SRS warning light lights up for approx. 6 seconds after the ignition switch is turned from the LOCK position to ON position, and then turns off automatically.
If there is a malfunction in the SRS, the SRS warning light lights up to inform the driver of the abnormality.
When terminals Tc and CG of the DLC3 are connected, the DTC is displayed by blinking the SRS warning light.

WIRING DIAGRAM

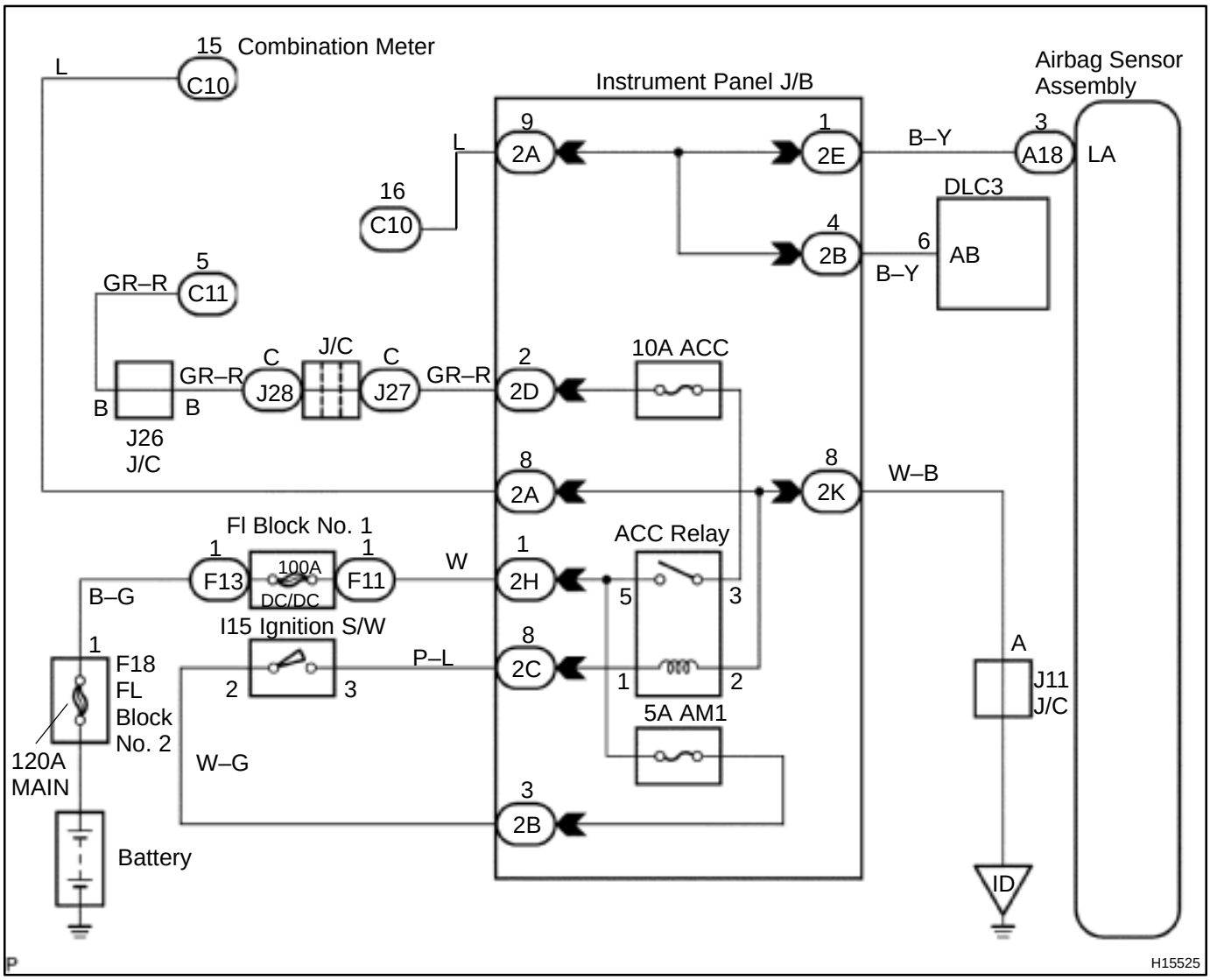

INSPECTION PROCEDURE

Always lights up, when ignition switch is in LOCK position

1	**Prepare for inspection (See step 1 on page DI–629).**

2	**Does SRS warning light turn off?**

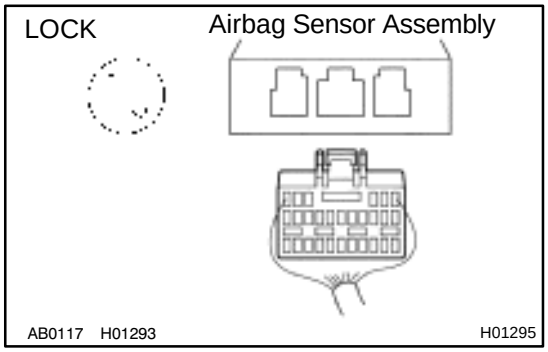

PREPARATION:

(a) Turn the ignition switch to LOCK.
(b) Disconnect negative (–) terminal cable from the battery, and wait at least for 90 seconds.
(c) Disconnect the airbag sensor assembly connector.
(d) Connect negative (–) terminal cable to the battery.

CHECK:

Check operation of SRS warning light.

NO → **Check SRS warning light circuit or terminal A/B circuit of DLC3.**

YES

Replace airbag sensor assembly.

Does not light up, when ignition switch is turned to ON

1	**Check AM2 Fuse.**

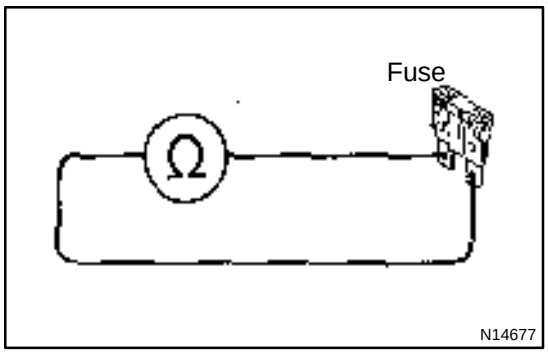

PREPARATION:
Remove the AM2 fuse.
CHECK:
Check continuity of the AM2 fuse.
OK:
Continuity
HINT:
- Fuse may be burnt out even if it appears to be OK during visual inspection.
- If fuse is OK, install it.

NG → **Go to step 4.**

OK

2	**Prepare for inspection (See step 1 on page DI–629).**

3	**Check SRS warning light circuit.**

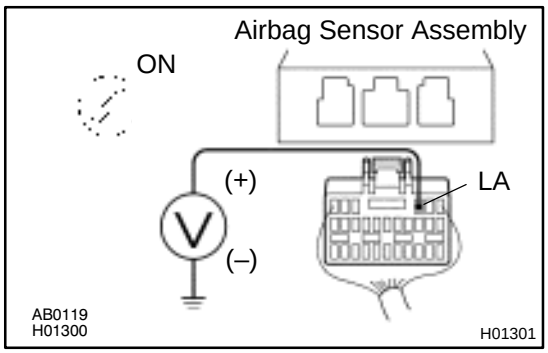

PREPARATION:
(a) Disconnect the airbag sensor assembly connector.
(b) Connect negative (–) terminal cable to the battery.
(c) Turn the ignition switch to ON.
CHECK:
Measure the voltage between body ground and LA terminal of the harness side connector of the airbag sensor assembly.
OK:
Voltage: 10 – 14 V

NG → **Check combination meter or repair SRS warning light circuit.**

OK

Replace airbag sensor assembly.

4	**Is new AM2 fuse burnt out again?**

NO → **Using simulation method, reproduce malfunction symptoms (See page IN–30).**

YES

Check harness between AM2 fuse and SRS warning light.

DI6Q0–06

Tc Terminal Circuit

CIRCUIT DESCRIPTION

By connecting terminals Tc and CG of the DLC3 the airbag sensor assembly is set in the DTC output mode. The DTCs are displayed by blinking the SRS warning light.

WIRING DIAGRAM

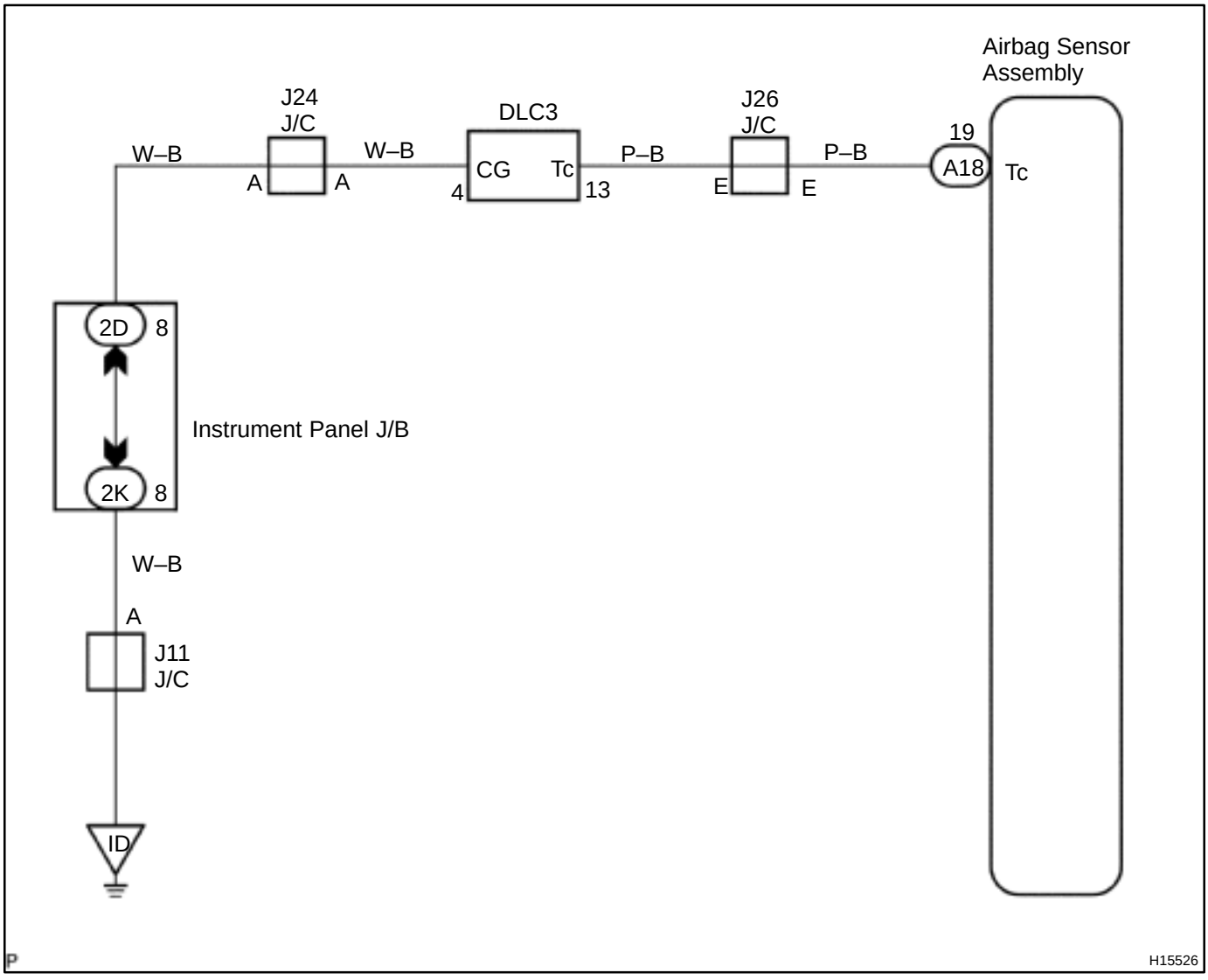

INSPECTION PROCEDURE

If the DTC is not displayed, do the following troubleshooting.

1	**Does SRS warning light light up for approx. 6 seconds?**

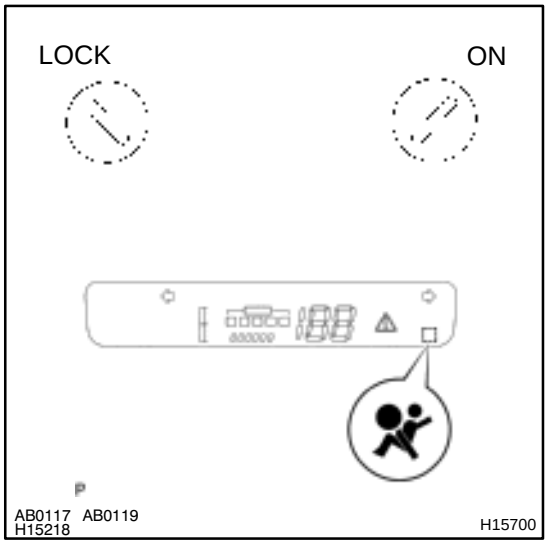

PREPARATION:
Check operation of the SRS warning light after ignition switch is turned from LOCK position to ON position.

NO → **Check SRS warning light system (See page DI–632).**

YES

2	**Check voltage between terminals Tc and CG of DLC3.**

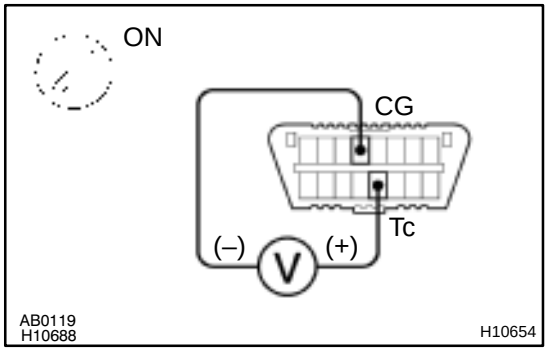

PREPARATION:
Turn the ignition switch to ON.
CHECK:
Measure the voltage between terminals Tc and CG of DLC3.
OK:
Voltage: 10 – 14 V

OK → **Go to step 4.**

NG

3	Check voltage between terminal Tc of DLC3 and body ground.

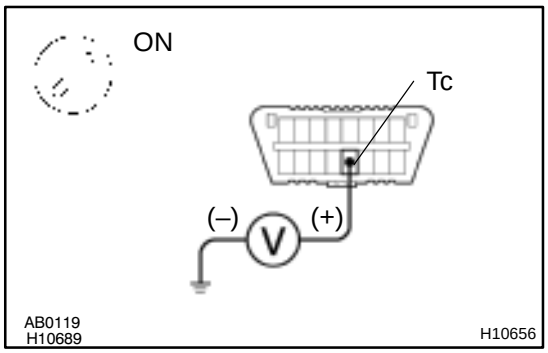

CHECK:

Measure the voltage between terminal Tc of DLC3 and body ground.

OK:

Voltage: 10 – 14 V

OK	Check harness between terminal E1 of DLC3 and body ground.

NG

4	Check airbag sensor assembly.

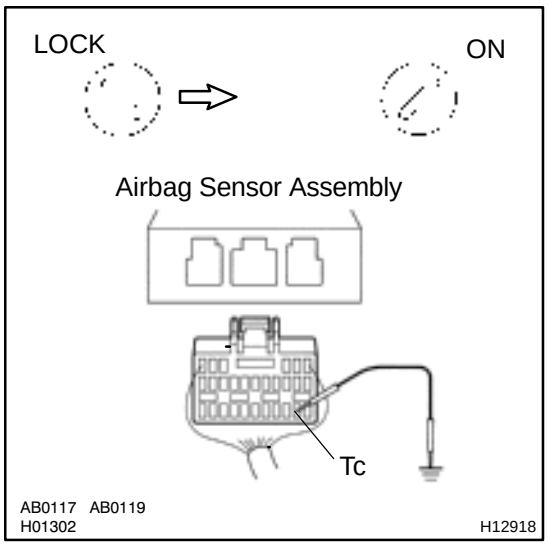

PREPARATION:

(a) Turn the ignition switch to LOCK.
(b) Disconnect negative (–) terminal cable from the battery, and wait at least for 90 seconds.
(c) Disconnect the airbag sensor assembly connector.
(d) Insert service wire into terminal Tc from back side as shown in the illustration.
(e) Connect the airbag sensor assembly connector with service wire.
(f) Connect negative (–) terminal cable to the battery.
(g) Turn the ignition switch to ON and wait at least for 20 seconds.
(h) Connect service wire of terminal Tc to body ground.

CHECK:

Check operation of the SRS warning light.

OK:

SRS waning light comes on.

NOTICE:

Pay due attention to the terminal connecting position to avoid a malfunction.

OK	Check harness between the airbag sensor assembly and DLC3.

NG

Replace airbag sensor assembly.

If the DTC is displayed without a DTC check procedure, perform the following troubleshooting.

1	**Check resistance between terminal Tc of airbag sensor assembly and body ground.**

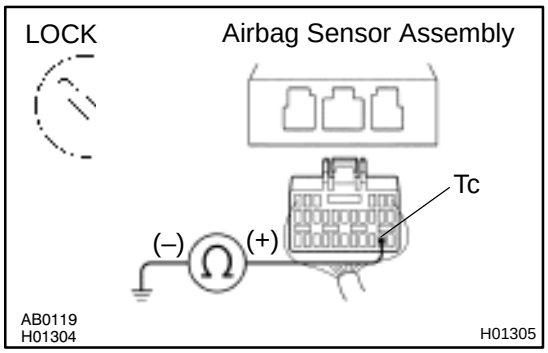

PREPARATION:

(a) Turn the ignition switch to LOCK.
(b) Disconnect negative (–) terminal cable from the battery, and wait at least for 90 seconds.
(c) Disconnect the airbag sensor assembly connector.

CHECK:

Check resistance between terminal Tc of the airbag sensor assembly connector and body ground.

OK:

Resistance: 1 MΩ or Higher

NG → **Repair or replace harness or connector.**

OK

Replace airbag sensor assembly.

DI7NG–01

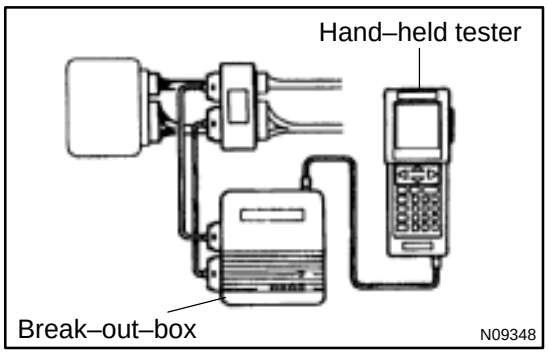

PRE–CHECK

1. ECU TERMINAL VALUES MEASUREMENT BY USING BREAK–OUT–BOX AND HAND–HELD TESTER

(a) Hook up the break–out–box and hand–held tester to the vehicle.

(b) Read the ECU input/output values by following the prompts on the tester screen.

(c) Please refer to the hand–held tester has a ”Snapshot” function. This records the measured data and is effective in the diagnosis of intermittent problems.

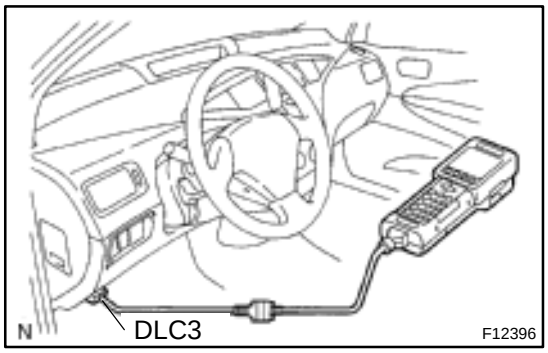

2. USING HAND–HELD TESTER

(a) Hook up the hand–held tester to the DLC3.

(b) Monitor the ECU data by following the prompts on the tester screen.

HINT:

Hand–held tester has a ”Snapshot” function which records the monitored data.

Please refer to the hand–held tester operator’s manual for further details.

3. DTC CLEARANCE

DTC can be deleted using a hand–held tester. If there is no hand–held tester or it cannot be used, disconnect the auxiliary battery for 1 min. or more and connect it again.

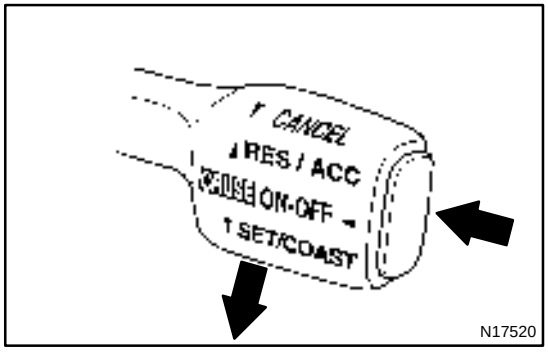

4. PROBLEM SYMPTOM CONFIRMATION (ROAD TEST)

(a) Inspect the SET switch.

(1) Push the main switch ON.

(2) Drive at a desired speed (40 km/h (25 mph) or higher).

(3) Press the control switch to the SET/COAST.

(4) After releasing the switch, check that the vehicle cruises at the desired speed.

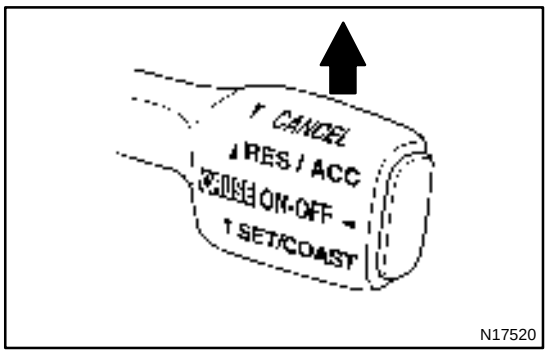

(b) Inspect the ACCEL switch.
(1) Push the main switch ON.
(2) Drive at a desired speed (40 km/h (25 mph) or higher).
(3) Check that the vehicle speed increases while the control switch is turned to RES/ACC, and that the vehicle cruises at the set speed when the switch is released.
(4) Momentarily press the control switch upward in the RES/ACC and then immediately release it. Check that the vehicle speed increases by about 1.5 km/h (Tap–up function).

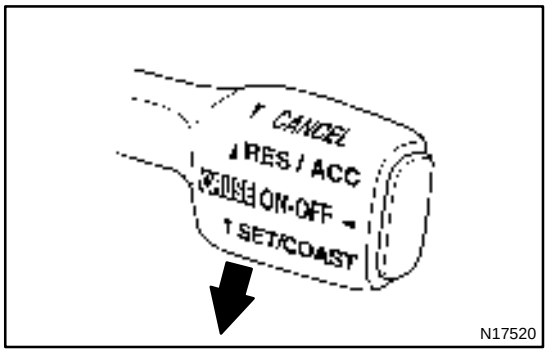

(c) Inspect the COAST switch.
(1) Push the main switch ON.
(2) Drive at a desired speed (40 km/h (25 mph) or higher).
(3) Check that the vehicle speed decreases while the control switch is turned to SET/COAST, and the vehicle cruises at the set speed when the switch is released.
(4) Momentarily press the control switch is turned to SET/COAST, and then immediately release it. Check that the vehicle speed decreases by about 1.5 km/h (Tap–down function).

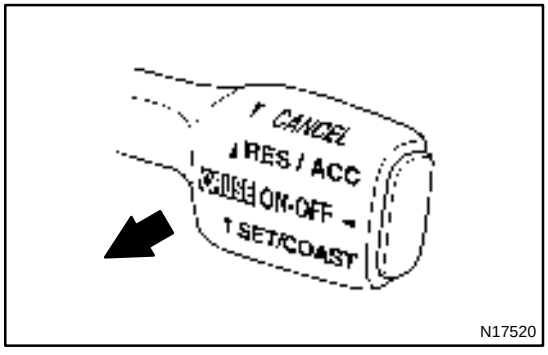

(d) Inspect the CANCEL switch.
(1) Push the main switch ON.
(2) Drive at a desired speed (40 km/h (25 mph) or higher).
(3) When operating one of the followings, check that the cruise control system is cancelled and that the normal driving mode is reset.
- Depress the brake pedal
- Shift to except D range (A/T)
- Push the main switch OFF

- Pull the cruise control switch to CANCEL

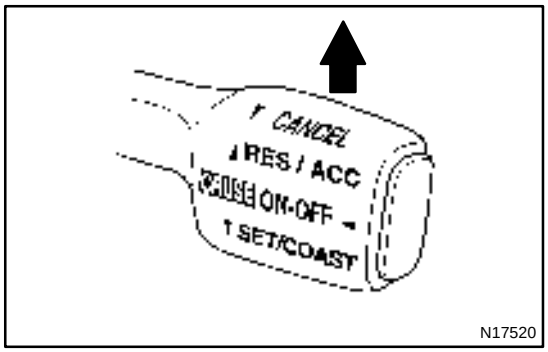

(e) Inspect the RESUME switch.
  (1) Push the main switch ON.
  (2) Drive at a desired speed (40 km/h (25 mph) or higher).
  (3) When operating one of the followings, check that the cruise control system is cancelled and that the normal driving mode is reset.
    - Depress the brake pedal
    - Shift to except D range (A/T)
    - Pull the cruise control switch to CANCEL
  (4) After the control switch is turned to RES/ACC at the driving speed of more than 40 km/h (25 mph), check that the vehicle restores the speed prior to the cancellation.

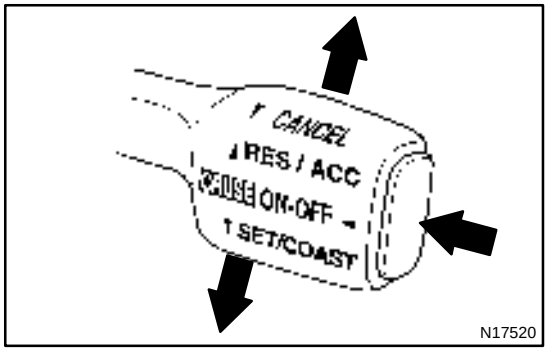

5. INPUT SIGNAL CHECK
(Using hand–held tester)

(a) Connect the hand–held tester to DLC3
(b) Check the control switch (MAIN, CANCEL, SET/COAST, RES/ACC)

CIRCUIT INSPECTION

DI7NI–01

DTC	P1520	Stop light switch circuit

CIRCUIT DESCRIPTION

When the brake pedal is depressed, the stop light switch sends a signal to the hybrid vehicle control ECU. When the hybrid vehicle control ECU receives this signal, it cancels the cruise control.
A fail–safe function is provided so that the cancel functions normally, even if there is a malfunction in the stop light signal circuit.
The cancel condition is that battery voltage is supplied to terminal STP.
When the brake is on, battery voltage is normally applied through the STOP fuse and stop light switch to terminal STP of the hybrid vehicle control ECU, and the hybrid vehicle control ECU turns the cruise control OFF.
If the harness connected to terminal STP has an open circuit, terminal STP will have battery voltage and the cruise control will be turned OFF.

DTC No.	Detection Item	Trouble Area
P1520	Stop light switch circuit.	• Stop light switch • Harness or connector between hybrid vehicle control ECU and stop light switch circuit • Hybrid vehicle control ECU

WIRING DIAGRAM

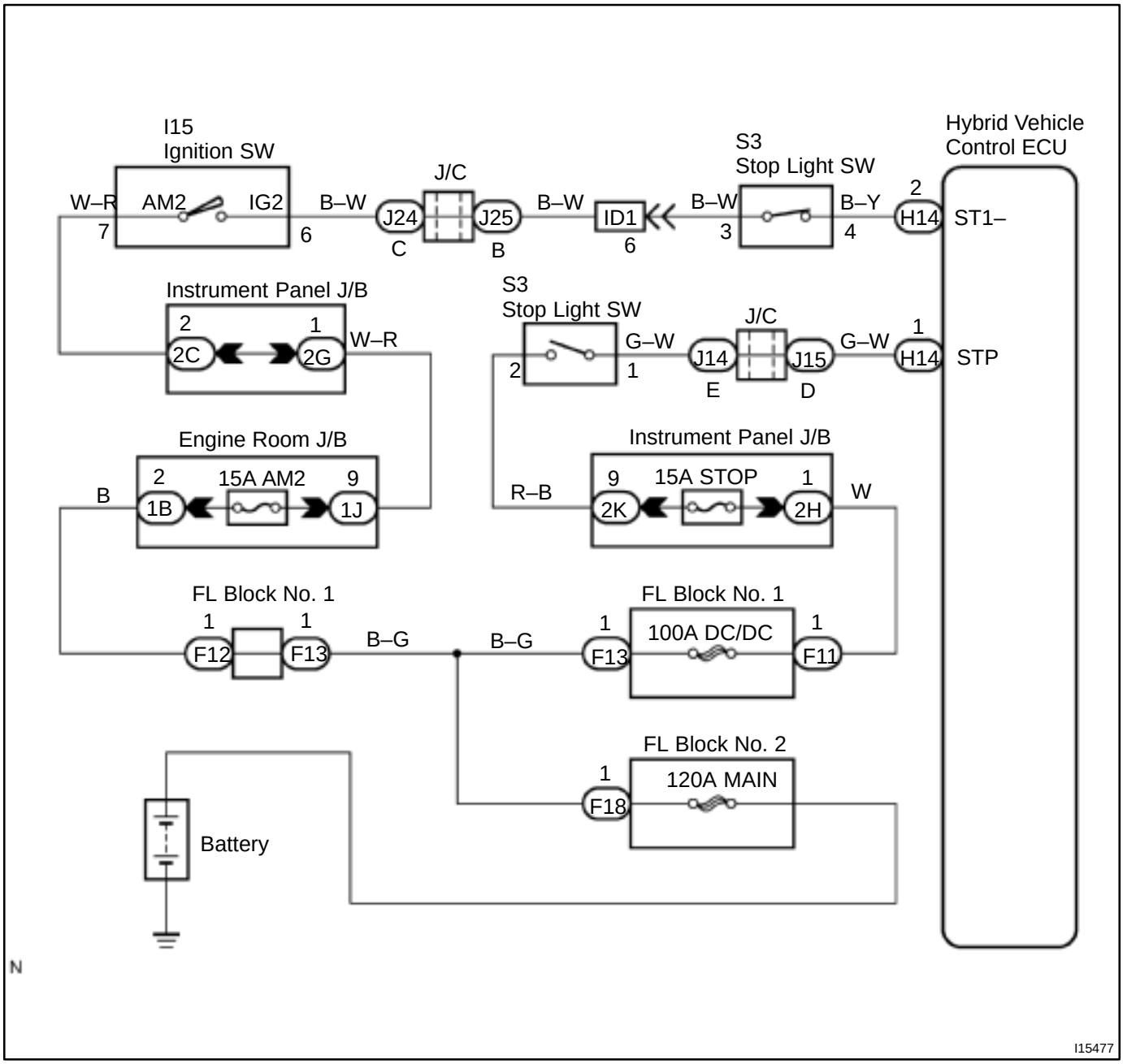

INSPECTION PROCEDURE

1	**Check operation of stop light.**

CHECK:

Check that stop light comes on when brake pedal is depressed, and turns off when brake pedal is released.

NG → **Check stop light system (See page BE–2).**

OK

2	**Check voltage between terminal STP of hybrid vehicle control ECU connector and body ground.**

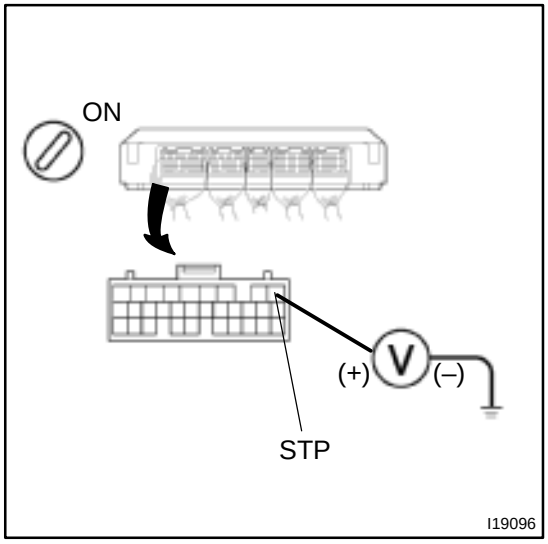

PREPARATION:

(a) Remove the hybrid vehicle control ECU with connectors still connected.

(b) Turn ignition switch ON.

CHECK:

Measure voltage between terminal STP of hybrid vehicle control ECU connector and body ground, when the brake pedal is depressed and released.

OK:

Depressed	10 – 14 V
Released	Below 1 V

OK → **Proceed to next circuit inspection shown in problem symptom table (See page DI–648).**

NG

3	**Check voltage between terminal ST1– of hybrid vehicle control ECU connector and body ground.**

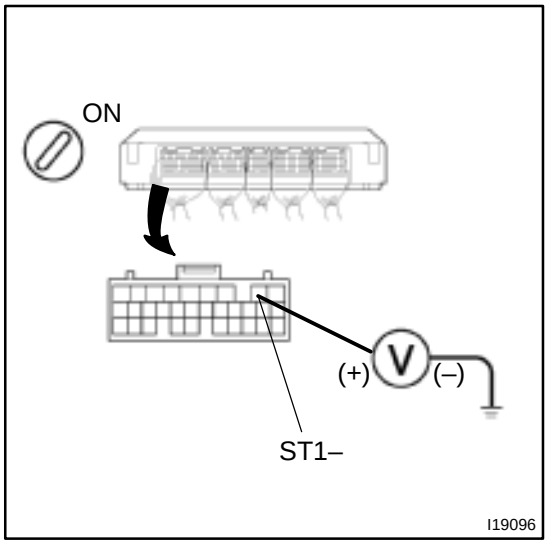

PREPARATION:

(a) Remove the hybrid vehicle control ECU with connectors still connected.

(b) Turn ignition switch ON.

CHECK:

Measure voltage between terminal ST1– of hybrid vehicle control ECU connector and body ground, when the brake pedal is depressed and released.

OK:

Depressed	Below 1 V
Released	10 – 14 V

OK → **Proceed to next circuit inspection shown in problem symptoms table (See page DI–648).**

NG

4	**Check wire harness and connector between terminal STP of hybrid vehicle control ECU and stop light switch, and terminal ST1– of hybrid vehicle control ECU and stop light switch (See page IN–41).**

NG → **Repair or replace harness or connector.**

OK

Check and replace hybrid vehicle control ECU (See page DI–174).

DI7NJ–01

Power source circuit

CIRCUIT DESCRIPTION

This circuit provides power to operate the hybrid vehicle control ECU.

WIRING DIAGRAM

See page DI–156.

INSPECTION PROCEDURE

1	**Check IGN and EFI fuse.**

CHECK:

Check continuity of IGN and EFI fuse.

OK:

Continuity

NG → **Replace the failure fuse.**

OK

2	**Check voltage between terminals IGSW, BATT and GND of hybrid vehicle control ECU connector (See page IN–41).**

PREPARATION:

(a) Turn ignition switch OFF.

(b) Disconnect the hybrid vehicle control ECU connector.

CHECK:

Measure voltage between terminals IGSW, BATT and GND

OK:

Voltage: 10 – 14 V

OK → **Proceed to next circuit inspection shown in problem symptoms table (See page DI–648).**

NG

3	**Check wireharness and connector between hybrid vehicle control ECU and body ground (See page IN–41).**

NG → **Repair or replace wireharness or connector.**

OK

Check and repair wireharness and connector between hybrid vehicle control ECU and battery (See page IN–41).

DI7NL–01

CRUISE MAIN Indicator Light Circuit

CIRCUIT DESCRIPTION

When the cruise control main switch is turned ON, CRUISE MAIN indicator light lights up.

WIRING DIAGRAM

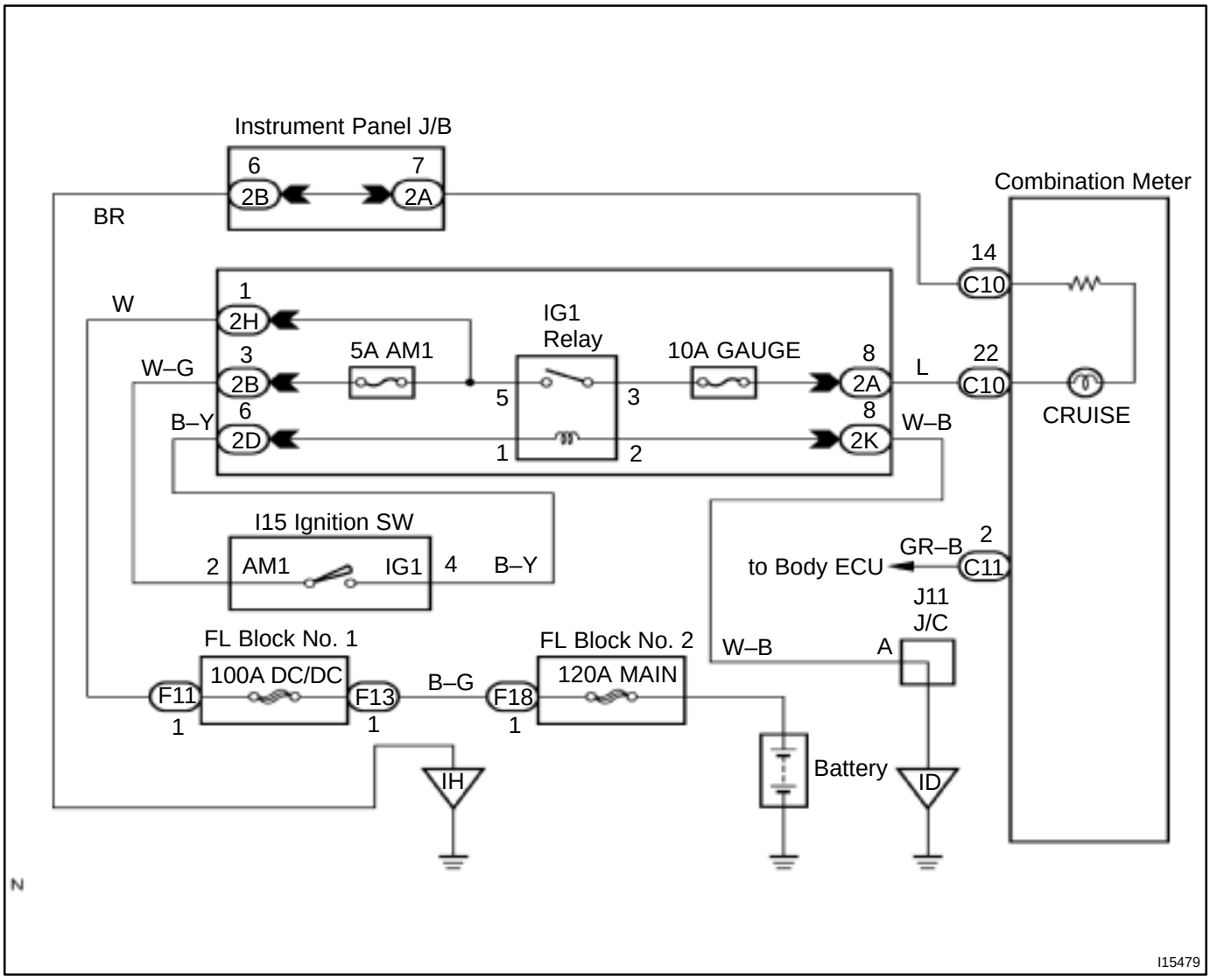

INSPECTION PROCEDURE

1	Check combination meter (See page BE–2).

NG → Replace combination meter.

OK →

Check and replace hybrid vehicle control ECU (See page DI–174).

DI7XP–01

PRE–CHECK

1. BEFORE CHECK

Since a trouble symptom may result from multiple causes, check not only the part where a user complains of but also the following items in order to be sure no other trouble is identified.

- Fuse related parts
- Wire harness related parts
- Valve related parts

NOTICE:

- **Setting the ignition switch to START temporarily stops all meter operation, however, this is not an error.**
- **When replacing the combination meter ECU, carefully avoid any contact with the IC.**
- **Removing a battery terminal during engine operation may cause a reversed current and lead to malfunction.**
- **When disconnecting any connector or terminal, be sure to disconnect the battery terminal.**

2. FUEL GAUGE DIAGNOSIS CHECK

(a) Fuel emergency display

HINT:

If FR voltage input to the fuel sender gauge is abnormal (4.8 V or more, or 0.06 V or less) due to any error, an emergency will be displayed.

(b) Display:

Immediately after the ignition switch is ON, all of the segments flash.

Diagnosis display	Trouble Item	Plausible Cause
All segments flashing (Flashing pattern No. 1) Cycle: 1.2 sec Duty: 50 %	Multiple communication error	Communication is cut off. 4. Body ECU faulty 5. Engine ECU faulty 6. Open or short in wire harness for communication HINT: Referring to the attached reference material 1 or 2, specify the main cause
All segments flashing (Flashing pattern No. 2) (300 msec. ON, 300 msec OFF) x 2 + 1.2 sec. OFF	Sender gauge related trouble	1. Sender gauge faulty 2. Open or short in wire harness
Display segments and ”E” flashing. (Flashing pattern No. 1) Cycle: 1.2 sec Duty: 50 %	Temperature sensor (located in the tank) related trouble	1. Temperature sensor faulty 2. Open or short in wire harness
Display segments and ”E” flashing. (Flashing pattern No. 2) (300 msec. ON, 300 msec. OFF) x 2 + 1.2 sec. OFF	Indication sensor (located in the meter) trouble	1. Combination meter faulty
Segment No. 1 flashing (Flashing pattern No. 1) Cycle: 1.2 sec Duty: 50 %	This does not mean any failure. When a battery is connected, it continues flashing until the volume is confirmed.	This occurs when the battery is turned ON. HINT: Low fuel warning: Cycle: 0.6 sec.; Duty: 50 %

Flashing pattern No.1

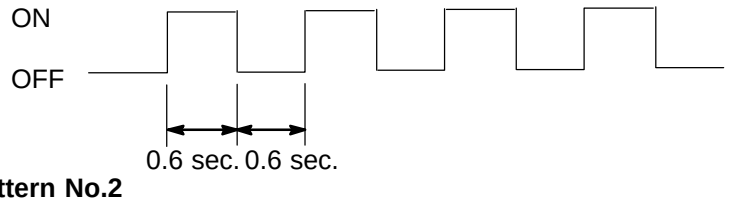

Flashing pattern No.2

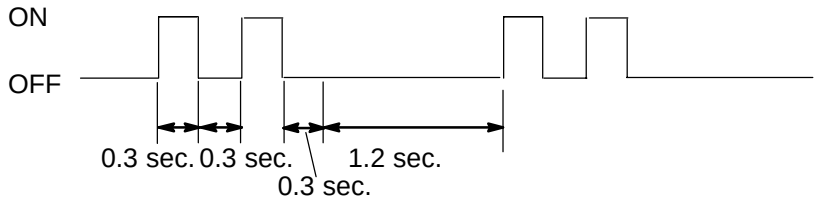

DI7XR–01

TERMINALS OF ECU

Disconnect connector ”A” and ”B” from the combination meter and inspect the connectors on the wire harness side as shown in the table.

COMBINATION METER

Connector ”A”

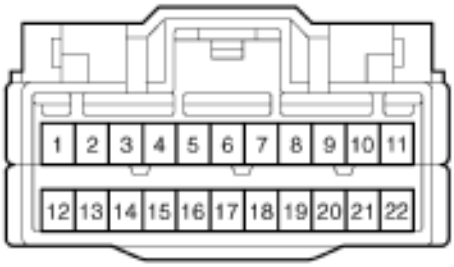

Connector ”B”



(LHD model)

N

I17803

Tester connection	Condition	Specified condition
A1 – Ground (ILL – Body ground)	Ignition switch ON and tail cancel switch ON or OFF	Below 1V or 4.5 – 5.5 V
A2 – Ground (E – Body ground)	Constant	Continuity
A3 – Ground (OPO – Body ground)	Ignition switch ON and trip reset switch ON or OFF	Below 1V or 4.5 – 5.5 V
A9 – Ground (SI – Body ground)	Ignition switch ON and slowly turn drive wheel	Below 1V or 10 – 14 V
A10 – Ground (LP – Body ground)	Ignition switch ON and ABS indicator ON or OFF	Below 1V or 10 – 14 V
A11 – Ground (L – Body ground)	Ignition switch ON	Pulse generation
A13 – Ground (+S – Body ground)	Ignition switch ON and slowly turn drive wheel	Below 1V or 10 – 14 V
		Below 1V or 4.5 – 5.5 V
A14 – Ground (ES – Body ground)	Constant	Continuity
A15 – Ground (EP – Body ground)	Constant	Continuity
A16 – Ground (SW – Body ground)	Ignition switch ON and air bag indicator light ON or OFF	Below 1V or 10 – 14 V
A17 – Ground (S – Body ground)	Headlight dimmer switch Hi or Low	Below 1V or 10 – 14 V
A18 – Ground (B – Body ground)	Ignition switch ON and turn signal switch right	Below 1V or 10 – 14 V
A19 – Ground (B – Body ground)	Ignition switch ON and turn signal switch left	Below 1V or 10 – 14 V
A21 – Ground (B – Body ground)	Constant	10 – 14 V
A22 – Ground (IG – Body ground)	Ignition switch OFF or ON	Below 1V or 10 – 14 V

B1 – Ground (ROUT – Body ground)	Ignition switch ON and shift lever position is ”R” or except ”R”	Below 1V or 10 – 14 V
B2 – Ground (MPX+ – Body ground)	Ignition switch ON	Pulse generation
B3 – Ground (MPX – Body ground)	Ignition switch ON	Pulse generation
B5 – Ground (ACC – Body ground)	Ignition switch ACC	10 – 14 V

DI7XS–01

PROBLEM SYMPTOMS TABLE

TROUBLESHOOTING:

Flow chart No.	Symptom	See page
1	Check the communication between the combination meter and the multiplex communication circuit.	DI–671
2	The whole meter does not function	DI–672
3	The margin of error in speedometer is large. Or it remains as 0 mph.	DI–673
4	Fuel receiver gauge is inoperative or improper.	DI–674
5	Indicators or warning lights do not light up.	DI–676

Fuel gauge:

Symptom	Suspect Area	See page
Displayed level is higher or lower than the actual level.	1. Inclination sensor resetting 2. Body ECU	BE–47 IN–41

General:

Symptom	Suspect area
Meter display does not properly function.	3. Combination meter ECU
Entirely black screen appears.	1. Fuse 2. Wire harness and connector 3. Combination meter ECU
Turning the light control switch ON does not dim the light.	1. Illumination switch 2. Wire harness and connector 3. Combination meter ECU
Brightness cannot be changed by the illumination switch operation.	1. Illumination switch 2. Wire harness and connector 3. Combination meter ECU

Speedometer:

Symptom	Suspect area
Improper display (Remained as 0 km/h)	1. Accessory that utilizes vehicle speed signals 2. Brake ECU 3. Combination meter ECU 4. Wire harness and connector
Speedometer only does not light up.	1. Combination meter ECU
Abnormal display (Incomplete numbers displayed)	1. Combination meter ECU
DIsplayed value changes frequently or sharply.	1. Accessory that utilizes vehicle speed signals 2. Brake ECU 3. Combination meter ECU 4. Wire harness and connector
Margin of error in speedometer is large.	1. Accessory that utilizes vehicle speed signals 2. Brake ECU 3. Combination meter ECU 4. Wire harness and connector

ODO/TRIP Meter:

Symptom	Suspect area
ODO/TRIP only does not light up.	1. Combination meter ECU
Abnormal display (Incomplete number displayed)	1. Combination meter ECU
Both meters do not integrate values. (When speedometer is normal)	1. Combination meter ECU
Trip meter only does not integrate values.	1. ODO/TRIP switch 2. Combination meter ECU

Trip meter cannot be reset.	1. ODO/TRIP switch 2. Combination meter ECU
Display cannot be shifted among ODO, TRIPA and TRIPB.	1. ODO/TRIP switch 2. Combination meter ECU
Without resetting, the display returns to 0.0 km.	1. ODO/TRIP switch 2. +B wire harness 3. Combination meter ECU
Error of accumulated distance is large.	1. Accessory that utilizes vehicle speed signals. 2. GND wire harness 3. Brake ECU 4. Wire harness and connector 5. Combination meter ECU

Others:

Symptom	Suspect area
Some indicators or warning lights are always ON.	1. Meter circuit plate 2. Corresponding switch and ECU 3. Combination meter ECU 4. Multiplex communication circuit
Some indicators or warning lights do not light up.	1. Bulb 2. Meter circuit plate 3. Corresponding switch and ECU 4. Combination meter ECU 5. Multiplex communication circuit
Buzzer does not stop.	1. Combination meter ECU 2. Corresponding switch and ECU

5. Indicators or warning lights do not light up. (*multiplex communication circuit input indicator or warning)

INSPECTION PROCEDURE

1	**Multiplex communication circuit input indicator or warning.**

2	**Communication check.**

CHECK:

Check if the communication between the combination meter and the multiplex communication circuit is normal or not.

Yes

No → **Communication error. Wire harness faulty.**

3	**Check the bulb or circuit plate.**

CHECK:

Check if the bulb circuit plate is normal or not. Check open or short circuit in wire harness.

Yes

No → **Bulb or circuit plate faulty.**

4	Check the corresponding switch or ECU.

CHECK:

Check if the corresponding switch or ECU is normal or not.

Yes

No → **Corresponding switch or ECU faulty.**

Combination meter ECU faulty.

***:**

Multiplex communication input	Single Communication Input
OPEN DOOR WARNING	HI–BEAM INDICATOR
BRAKE WARNING	TURN SIGNAL IND
OUTPUT CONTROL INDICATOR	SRS WARNING
SHIFT POSITION INDICATOR	ABS WARNING
SEAT BELT WARNING	CHECK ENGINE WARNING
READY INDICATOR	
WATER TEMPERATURE WARNING	
OIL PRESSURE WARNING	
CRUISE CONTROL INDICATOR	
TAIL INDICATOR	
DISCHARGE WARNING	

DI7NN–01

TERMINALS OF ECU

BODY ECU

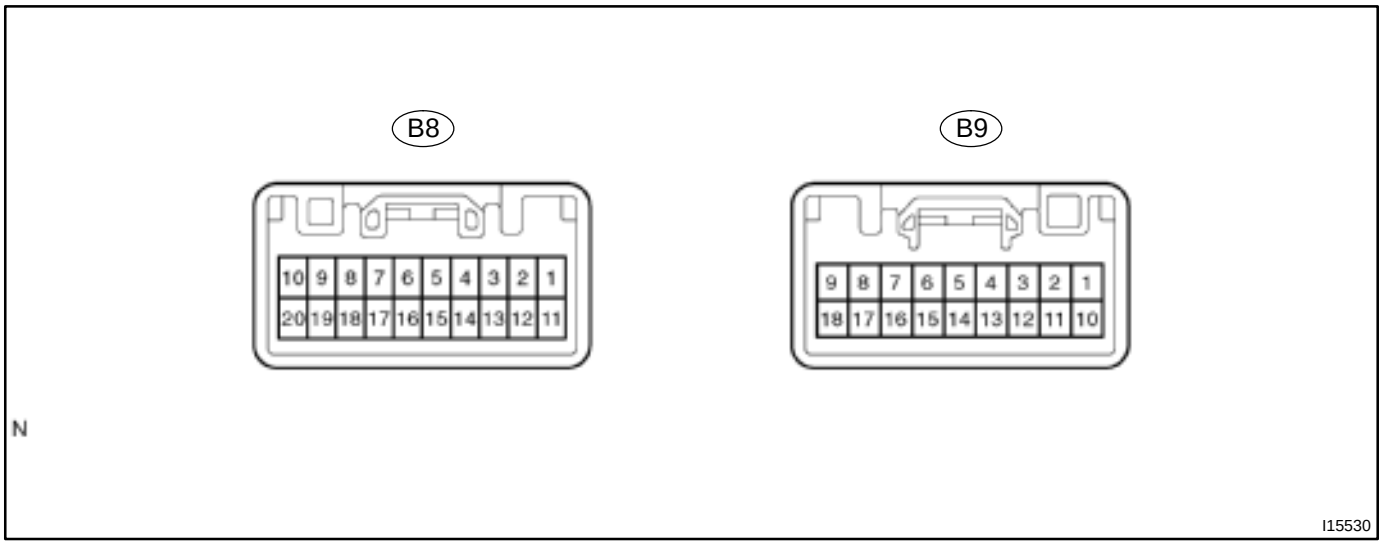

Symbols (Terminals No.)	Wiring Color	Condition	STD Voltage (V)
FLD ↔ E (B8–2 – B9–1)	G – B ↔ W – B	Power window (FR LH) is not operating	Below 1 v
		Power window (FR LH) is operating downward	10 – 14 v
FLU ↔ E (B8–3 – B9–1)	R – W ↔ W – B	Power window (FR LH) is not operating	Below 1 v
		Power window (FR LH) is operating upward	10 – 14 v
LUG ↔ E (B8–5 – B9–1)	L – B ↔ W–B	Luggage compartment door key lock and unlock switch is ON	Below 1 v
		Luggage compartment door key lock and unlock switch is OFF	10 – 14 v
RX (B8–6)	Y	AVC – LAN communication circuit	—
PRG (B8–7)	B – R	Wireless door lock ECU communication circuit	—
RDA (B8–8)	L	Wireless door lock ECU communication circuit	—
HR ↔ E (B8–10 – B9–1)	B – R ↔ W– B	Horn switch is ON	Below 1 v
		Horn switch is OFF	10 – 14 v
BDR – – Body ground (B8–11 – Body ground)	W – L ↔ Body ground	Constant	10 – 14 v
PCTY ↔ E (B8–12 – B9–1)	R – W ↔ W – B	Passenger door courtesy switch is OFF	Below 1 v
		Passenger door courtesy switch is ON	10 – 14 v
HCTY ↔ E (B8–13 – B9–1)	R – W ↔ W – B	Engine hood courtesy switch is OFF	Below 1 v
		Engine hood courtesy switch is ON	10 – 14 v
LCTY ↔ E (B8–14 – B9–1)	R – L ↔ W – B	Luggage door courtesy switch is OFF	Below 1 v
		Luggage door courtesy switch is ON	10 – 14 v
MPX+ (B8–15)	GR – B	Multiplex communication circuit	—
MPX– (B8–16)	GR	Multiplex communication circuit	—
LSWP ↔ E (B8–17 – B9–1)	W ↔ W – B	Passenger door unlock detection switch OFF (door unlocked)	Below 1 v
		Passenger door unlock detection switch ON (door locked)	10 – 14 v
LSR ↔ E (B8–18 – B9–1)	W – L ↔ W – B	Rear door unlock detection switch OFF (door unlocked)	Below 1 v
		Rear door unlock detection switch ON (door locked)	10 – 14 v
SH ↔ E (B8–20 – B9–1)	B – W ↔ W – B	Theft deterrent system is not operating	Below 1 v
		Theft deterrent system is operating	10 – 14 v
E – Body ground (B9–1 – Body ground)	W – B ↔ Body ground	Constant	Below 1 v

Symbols (Terminals No.)	Wiring Color	Condition	STD Voltage (V)
HRLY ↔ E (B9–2 – B9–1)	R – W ↔ W – B	Light control switch OFF	Below 1 v
		Light control switch TAIL or HEAD	10 – 14 v
PKBL ↔ E (B9–3 – B9–1)	P – L ↔ W – B	Passenger side buckle switch ON (belt fastened)	Below 1 v
		Passenger side buckle switch OFF (belt fastened)	10 – 14 v
DKBL ↔ E (B9–5 – B9–1)	G – O ↔ W – B	Driver side buckle switch ON (belt fastened)	Below 1 v
		Driver side buckle switch OFF (belt fastened)	10 – 14 v
L2 ↔ E (B9–7 – B9–1)	G ↔ W – B	Door lock manual switch OFF or UNLOCK	Below 1 v
		Door lock manual switch LOCK	10 – 14 v
B ↔ Body ground (B9—9 – Body ground)	R – G ↔ Body ground	Constant	10 – 14 v
ACTD ↔ E (B9–10 – B9–1)	R ↔ W – B	Driver door is operating	10 – 14 v
TRLY ↔ E (B9–11 – B9–1)	LG ↔ W – B	Light control switch OFF	Below 1 v
		Light control switch TAIL or HEAD	10 – 14 v
IND ↔ E (B9–13 – B9–1)	LG – B ↔ W – B	During set is theft deterrent system	10 – 14 v
L1 ↔ E (B9–14 – B9–1)	G – B ↔ W – B	Door key lock and unlock switch OFF or UNLOCK	Below 1 v
		Door key lock and unlock switch LOCK	10 – 14 v
UL1 ↔ E (B9–15 – B9–1)	R – B ↔ W – B	Door key lock and unlock switch OFF or LOCK	Below 1 v
		Door key lock and unlock switch UNLOCK	10 – 14 v
UL2 ↔ E (B9–16 – B9–1)	L – B ↔ W – B	Door lock manual switch OFF or LOCK	Below 1 v
		Door lock manual switch UNLOCK	10 – 14 v
H ↔ E (B9–17 – B9–1)	R ↔ W – B	Light control switch OFF or TAIL	Below 1 v
		Light control switch HEAD	10 – 14 v
T ↔ E (B9–18 – B9–1)	LG –B ↔ W – B	Light control switch OFF	Below 1 v
		Light control switch TAIL or HEAD	10 – 14 v

DI62G–07

PROBLEM SYMPTOMS TABLE

POWER WINDOW CONTROL SYSTEM

Symptom	Suspect Area	See page
All the power windows does not operate.	3. Master switch circuit 4. Driver door ECU with master switch 5. Body ECU	DI–724 DI–730 IN–41
Power window does not operate.	1. Power window switch circuit 2. Body ECU	DI–726 IN–41

DOOR LOCK CONTROL

Symptom	Suspect Area	See page
Lock or unlock cannot be operated with door lock control S/W.	1. Door lock control switch circuit (Master switch) 2. Body ECU	DI–706 DI–724 IN–41
Door key linked function does not operate.	1. Door key lock and unlock switch circuit 2. Body ECU	DI–708 IN–41
Key confinement prevention function does not operate.	1. Key unlock switch circuit 2. Body ECU	DI–695 IN–41
Does not lock and unlock each door only.	1. Door lock motor circuit 2. Body ECU	DI–712 IN–41
Luggage compartment door opener function does not operate.	1. Luggage component door courtesy switch circuit 2. Body ECU	DI–722 IN–41

WIRELESS DOOR LOCK CONTROL

Symptom	Suspect Area	See page
All function of wireless door lock control system do not operate.	1. Transmitter 2. Wireless tuner circuit 3. Key unlock warning switch circuit 4. Body ECU	BE–83 DI–728 DI–695 IN–41
Lock (or unlock) function does not operate.	1. Door key lock and unlock switch circuit 2. Door unlock detection switch circuit 3. Body ECU	DI–708 DI–710 IN–41
Automatic lock function operates even if any door is opened within 30 seconds after all doors are unlocked by wireless door lock control system .	1. Door courtesy switch circuit 2. Body ECU	DI–714 IN–41

ILLUMINATED ENTRY

Symptom	Suspect Area	See page
Illuminated entry does not operate.	1. Driver door courtesy switch circuit 2. Illuminaction circuit 3. Body ECU	DI–714 DI–702 IN–41

HEADLIGHT AND TAILLIGHT SYSTEM:

Symptom	Suspect Area	See page
Headlight does not light up.	1. Light control switch circuit 2. Headlight control relay circuit 3. Body ECU	DI–689 DI–693 IN–41
Taillight does not light up.	1. Light control switch circuit 2. Taillight control relay circuit 3. Body ECU	DI–689 DI–691 IN–41
Auto turn–off system does not operate.	1. Driver door courtesy switch circuit 2. Body ECU	DI–714 IN–41

OTHERS

Symptom	Suspect Area	See page
Does not turn off the driver seat belt warning light	1. Driver buckle switch circuit 2. Body ECU	DI–716 IN–41
Does not turn off the passenger seat belt warning light.	1. Passenger buckle switch circuit 2. Body ECU	DI–718 IN–41
Theft deterrent indicator light does not blink when system is set.	1. Indicator light circuit 2. Body ECU	DI–704 IN–41
Body ECU does not operate.	1. Power source circuit 2. Body ECU	DI–685 IN–41

DI6QW–04

CIRCUIT INSPECTION

Power Source Circuit

CIRCUIT DESCRIPTION

This circuit provides power to operate the Body ECU.

WIRING DIAGRAM

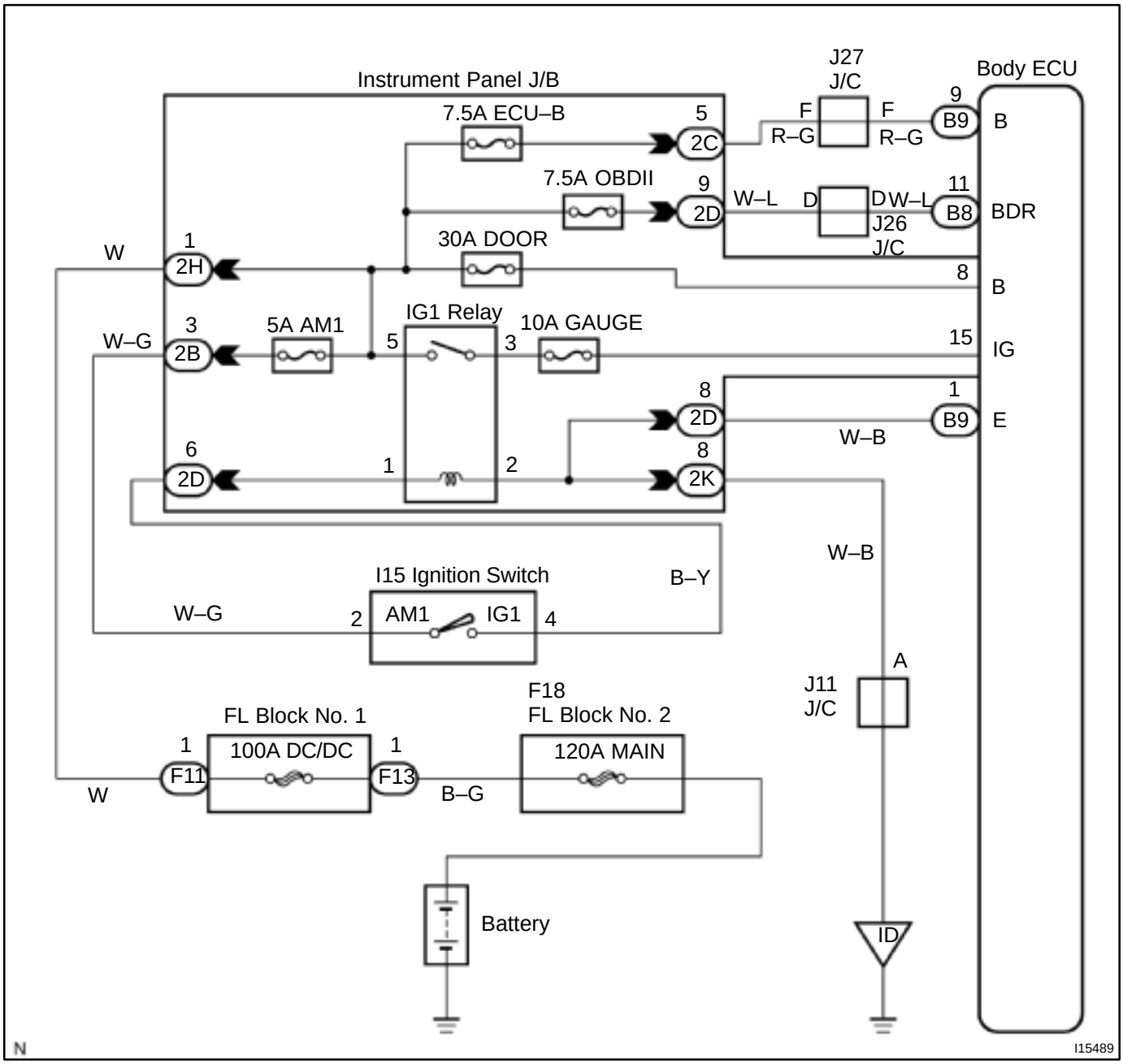

INSPECTION PROCEDURE

1	**Check ECU–B, DC/DC, GAUGE and DOOR fuse.**

CHECK:

Check continuity of ECU–B, DC/DC, GAUGE and DOOR fuse.

OK:

Continuity

NG → **Replace the failure fuse.**

OK

2	**Check voltage between terminals B, BDR and E of body ECU connector.**

PREPARATION:

(a) Turn ignition switch OFF.

(b) Disconnect the Body ECU connector.

CHECK:

Measure voltage between terminals B, BDR and E.

OK:

Voltage: 10 – 14V

OK → **Proceed to next circuit inspection shown on problem symptoms table (See page DI–683).**

NG

3	**Check wireharness and connector between body ECU and body ground (See page IN–41).**

NG → **Repair or replace wireharness or connector.**

OK

Check and repair wireharness and connector between Body ECU and battery.

DI7NO–01

Ignition Switch Power Source Circuit

CIRCUIT DESCRIPTION

When the ignition switch is turned to the ACC position, battery voltage is applied to the terminal ACC of the ECU and when the ignition switch is turned to the ON position, battery voltage is applied to the terminal IG of the ECU.

WIRING DIAGRAM

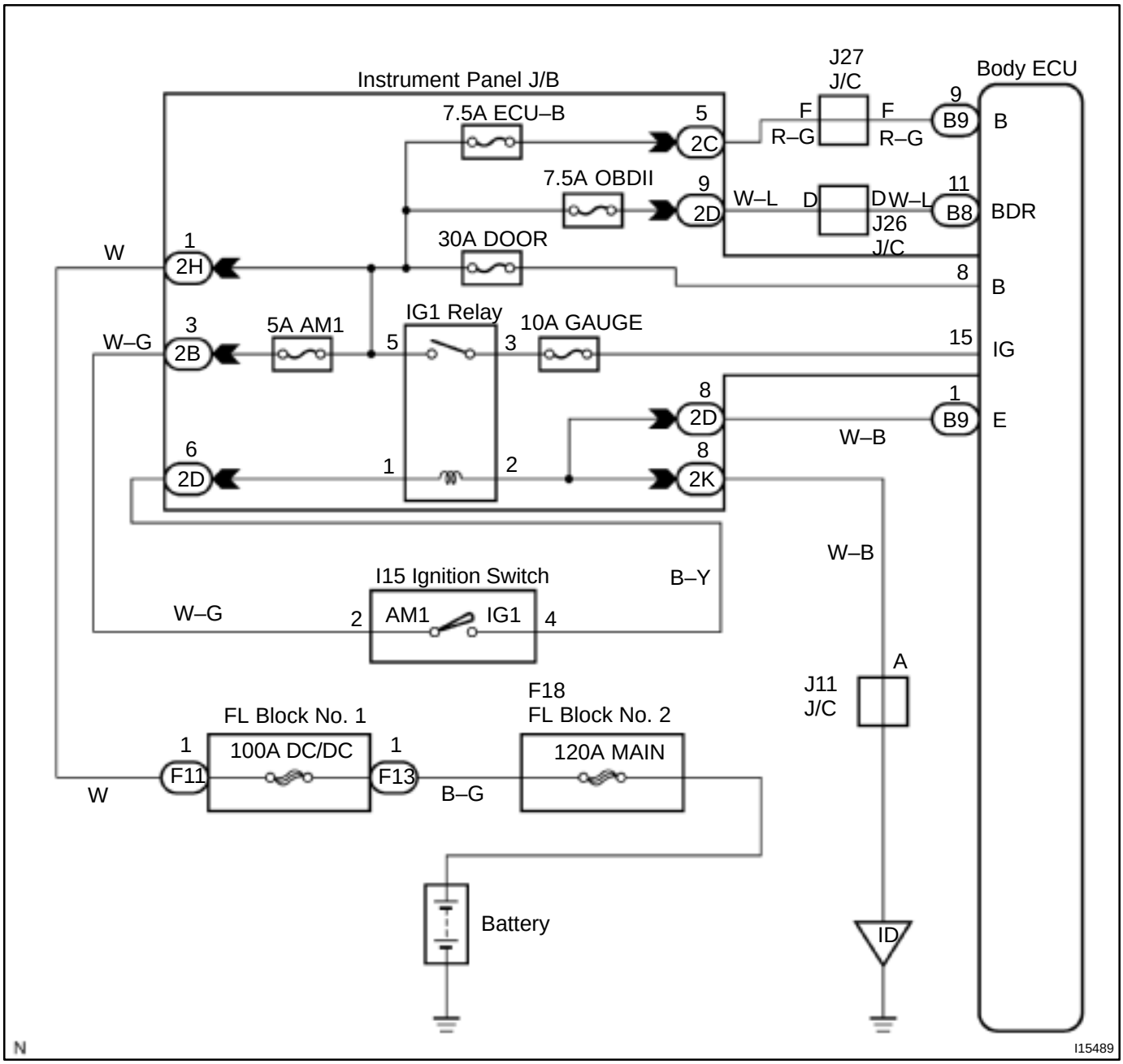

INSPECTION PROCEDURE

1	**Check AM1 fuse.**

CHECK:

Check continuity of AM1 fuse.

OK:

Continuity

NG → **Replace the failure fuse.**

OK

2	**Check voltage between terminals 8, 15 and E of body ECU connector.**

PREPARATION:

Turn ignition switch ON.

CHECK:

Measure voltage between terminals 8, 15 and E.

OK:

Voltage: 10 – 14V

OK → **Proceed to next circuit inspection shown on problem symptoms table (See page DI–683).**

NG

3	**Check wireharness and connector between body ECU and body ground (See page IN–41).**

NG → **Repair or replace wireharness or connector.**

OK

Check and repair wireharness and connector between body ECU and battery.

Light Control Switch Circuit

CIRCUIT DESCRIPTION

This circuit defects the state of the light control switch.

WIRING DIAGRAM

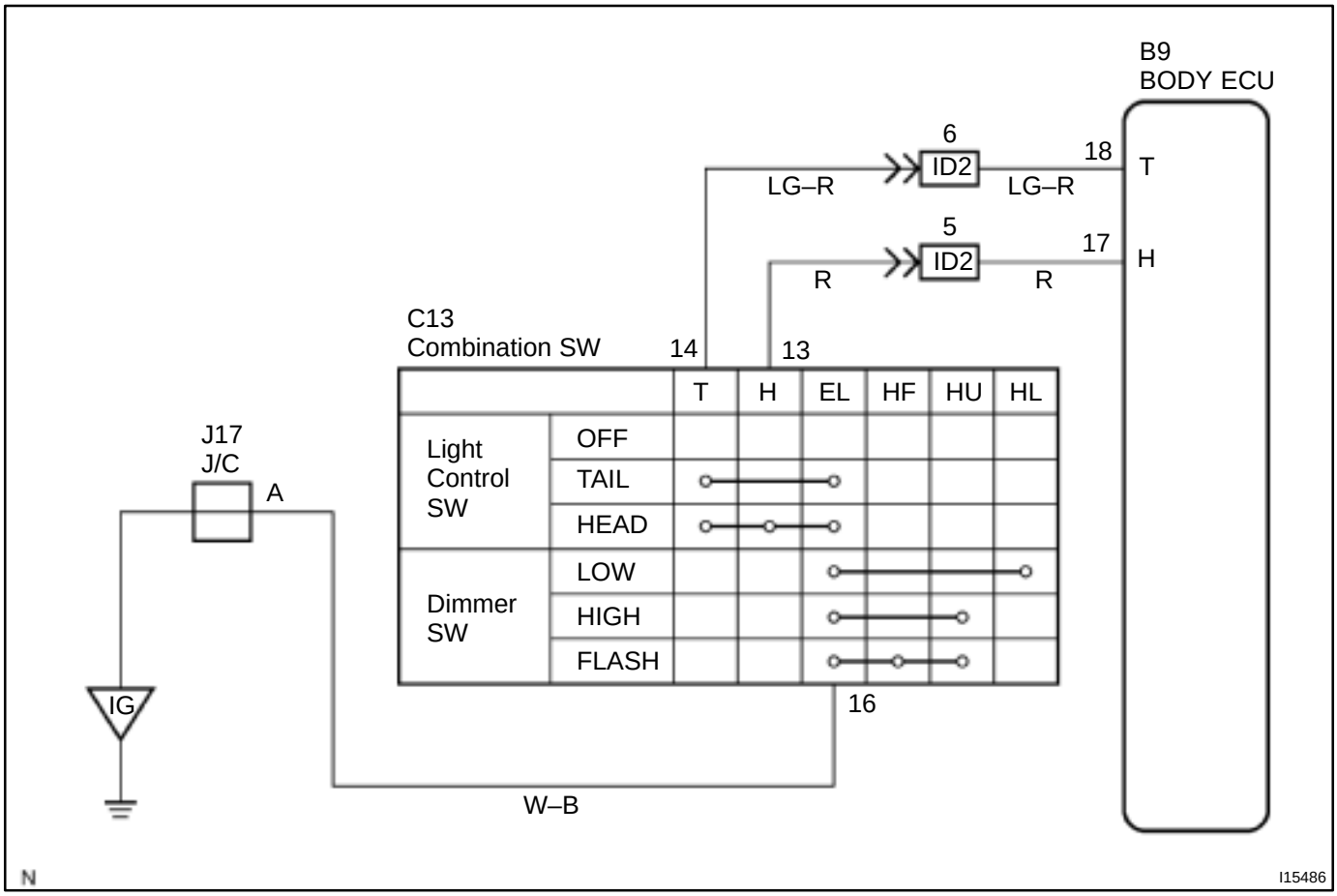

INSPECTION PROCEDURE

1	Check light control switch (See page DI–689).

NG → Replace the headlight control switch.

OK ↓

2	Check wireharness and connector between headlight control switch and body ECU (See page IN–41).

NG → Repair or replace wireharness or connector.

OK ↓

Proceed to next circuit inspection shown on problem symptoms table (See page DI–683).

DI6QY–04

Taillight Relay Circuit

CIRCUIT DESCRIPTION

Taillight relay will be ”ON” by operating the taillight switch. The transistor which activates the tail light relay has two sorts: one activates by the tail light switch for fail safe and the other activates by CPU.
When the theft deterrent system is activated, it causes the transistor in the ECU to switch ON and OFF at approximately 0.4 sec. intervals. This switches the taillight control relay ON and OFF, thus flashing the taillights (See the wiring diagram below).
In this condition, if any of the following operations is done, the transistor in the ECU goes OFF and the taillight control relay switches OFF, thus stopping the taillights flashing:

(1) Unlock the front LH or RH door with a key.
(2) Turn the ignition switch to ACC or ON position.
(3) Unlock the doors with the wireless door lock control system.
(4) Wait for approximately 60 seconds.

WIRING DIAGRAM

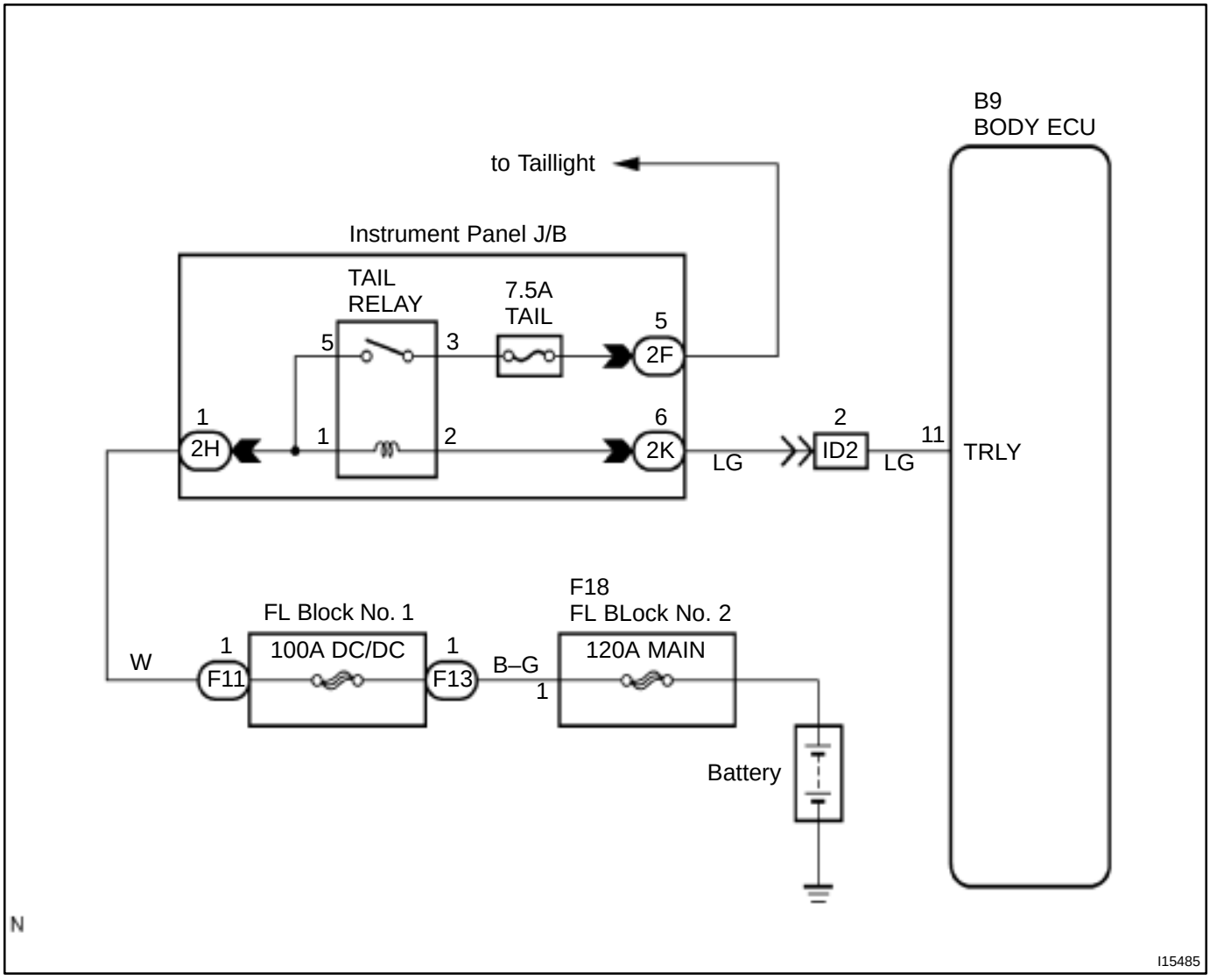

INSPECTION PROCEDURE

1	Check taillight relay (See page DI–691).

NG → Replace the taillight relay.

OK

2	Check wireharness and connector between taillight relay and body ECU, battery and taillight relay (See page IN–41).

NG → Repair or replace wireharness or connector.

OK

Proceed to next circuit inspection shown on problem symptoms table (See page DI–683).

DI5VQ–04

Headlight Relay Circuit

CIRCUIT DESCRIPTION

Head light relay will be ”ON” by operating the headlight switch. The transistor which activates the headlight relay has two sorts: one activates directly by the headlight switch for fail safe and the other activates by CPU. the one that activates by CPU has two systems and prevents the headlight from turning off at the time of one system trouble in the automatic operation circuit.
When the theft deterrent system is activated, it causes the transistor in the ECU to switch ON and OFF at approximately 0.25 sec. intervals. This switches the headlight control relay ON and OFF, thus flashing the headlights (See the wiring diagram below).
In this condition, if any of the following operations is done, the transistor in the ECU goes OFF and the headlight control relay switches OFF, thus stopping the headlights flashing:

(1) Unlock the front LH or RH door with a key.
(2) Turn the ignition switch to ACC or ON position.
(3) Unlock the doors with the wireless door lock control system.
(4) Wait for approximately 60 seconds.

WIRING DIAGRAM

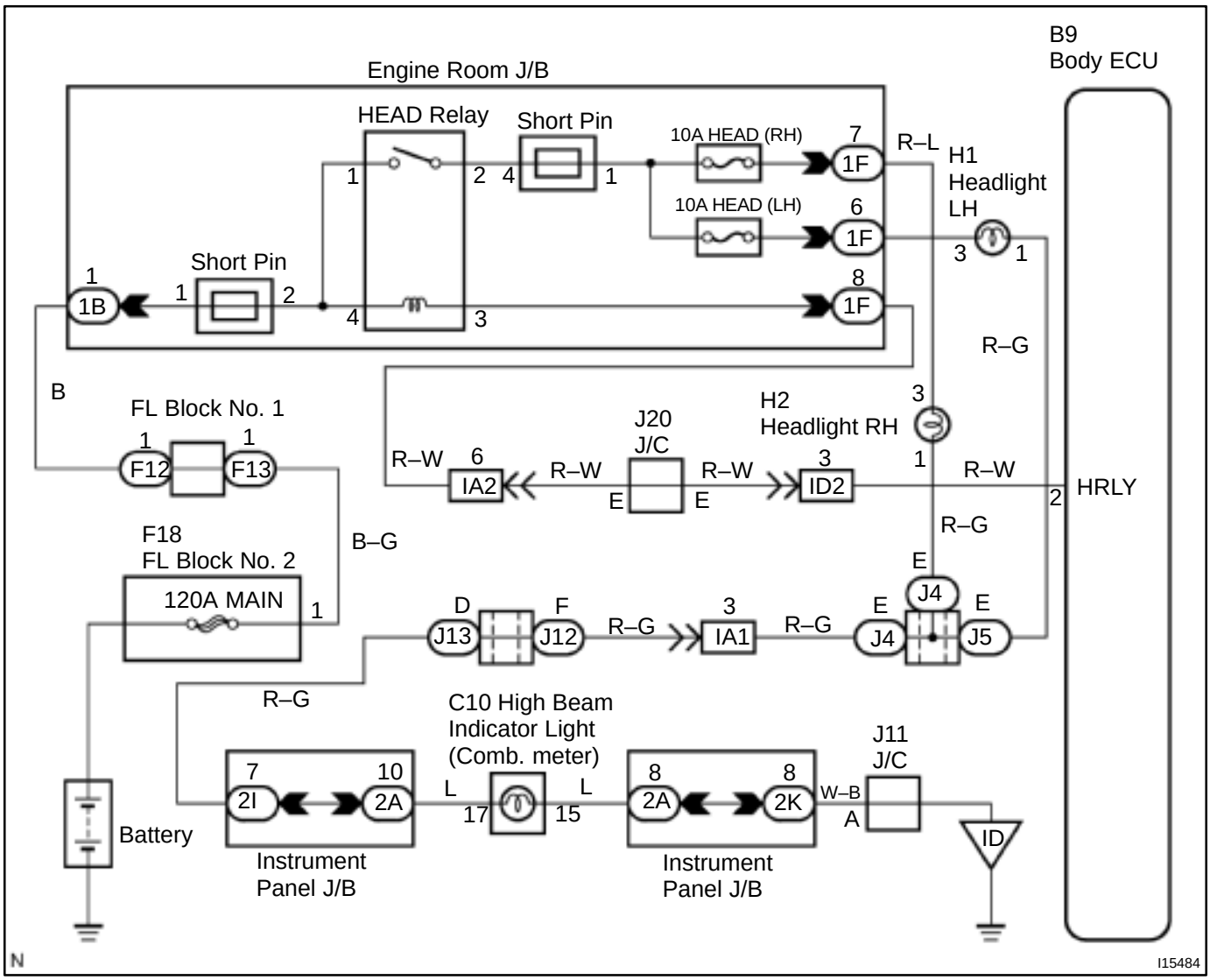

INSPECTION PROCEDURE

1	Check headlight relay (See page DI–693).

NG → Replace the headlight relay.

OK

2	Check wireharness and connector between headlight relay and body ECU, battery and headlight relay (See page IN–41).

NG → Repair or replace wireharness or connector.

OK

Proceed to next circuit inspection shown on problem symptoms table (See page DI–683).

DI7NP–01

Key unlock warning switch circuit

CIRCUIT DESCRIPTION

The key unlock warning switch goes on when the ignition key is inserted in the key cylinder and goes off when the ignition key is removed.
The ECU operates the key confinement prevention function while the key unlock warning switch is on.

WIRING DIAGRAM

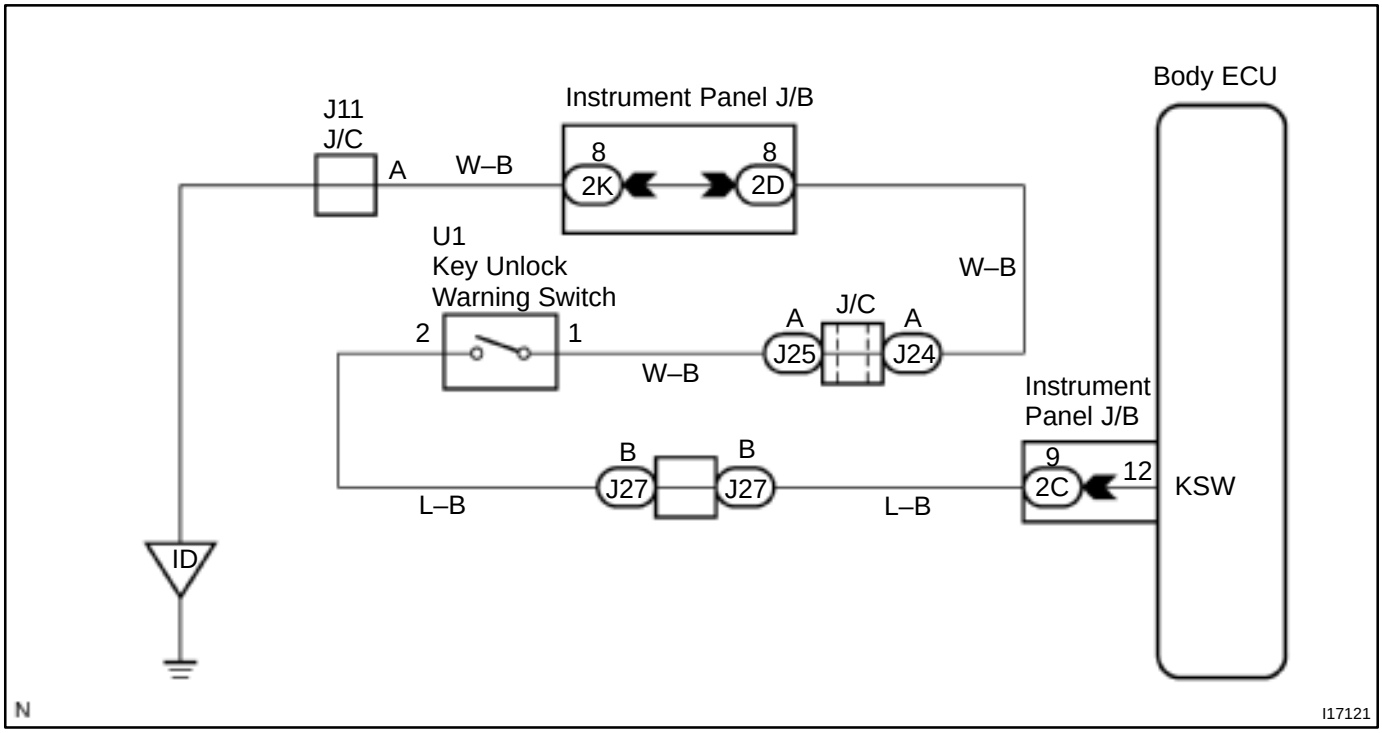

INSPECTION PROCEDURE

1	**Check key unlock warning switch (See page BE–62).**

NG → **Replace the key unlock warning switch.**

OK

2	**Check wireharness and connector between key unlock warning switch and body ECU.**

NG → **Repair or replace wireharness or connector.**

OK

Proceed to next circuit inspection shown on problem symptoms table (See page DI–683).

DI2A3–06

Horn Circuit

CIRCUIT DESCRIPTION

The horn is connected to the body ECU and activated by the body ECU.

WIRING DIAGRAM

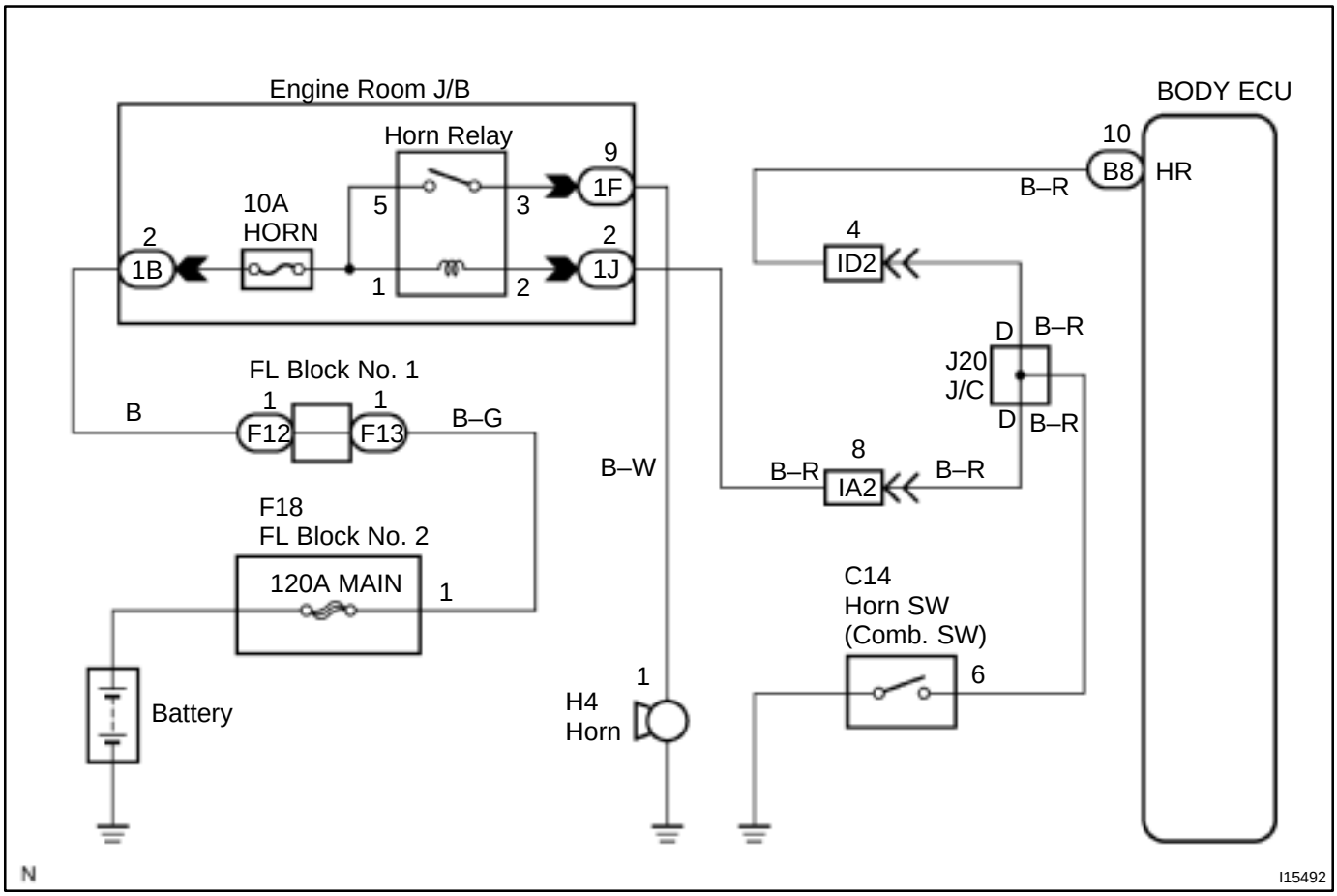

INSPECTION PROCEDURE

1	Check horn (See page DI–697).

NG → Replace the horn.

OK

2	Check wireharness and connector between horn relay and body ECU, battery and horn relay (See page IN–41).

NG → Repair or replace wireharness or connector.

OK

Proceed to next circuit inspection shown on problem symptoms table (See page DI–683).

DI7NQ–01

Theft Deterrent Horn Circuit

CIRCUIT DESCRIPTION

When the theft deterrent system is activated, the relay in the ECU turns ON and OFF cycles of approximately 0.2 sec., causing the theft deterrent horn to blow (See the wiring diagram below).
In this condition, if any of the following operations is done, the relay in the ECU turns OFF, thus stopping the theft deterrent horn from blowing:

(1) Unlock the front LH or RH door with key.
(2) Turn the ignition switch to ACC or ON position.
(3) Unlock the doors with the wireless door lock control system.
(4) Wait for approximately 60 seconds.
(5) Push the panic switch of the wireless door lock control system.

Except for the anti–theft purpose, the theft deferrent horn is used as a high–pitched horn.

WIRING DIAGRAM

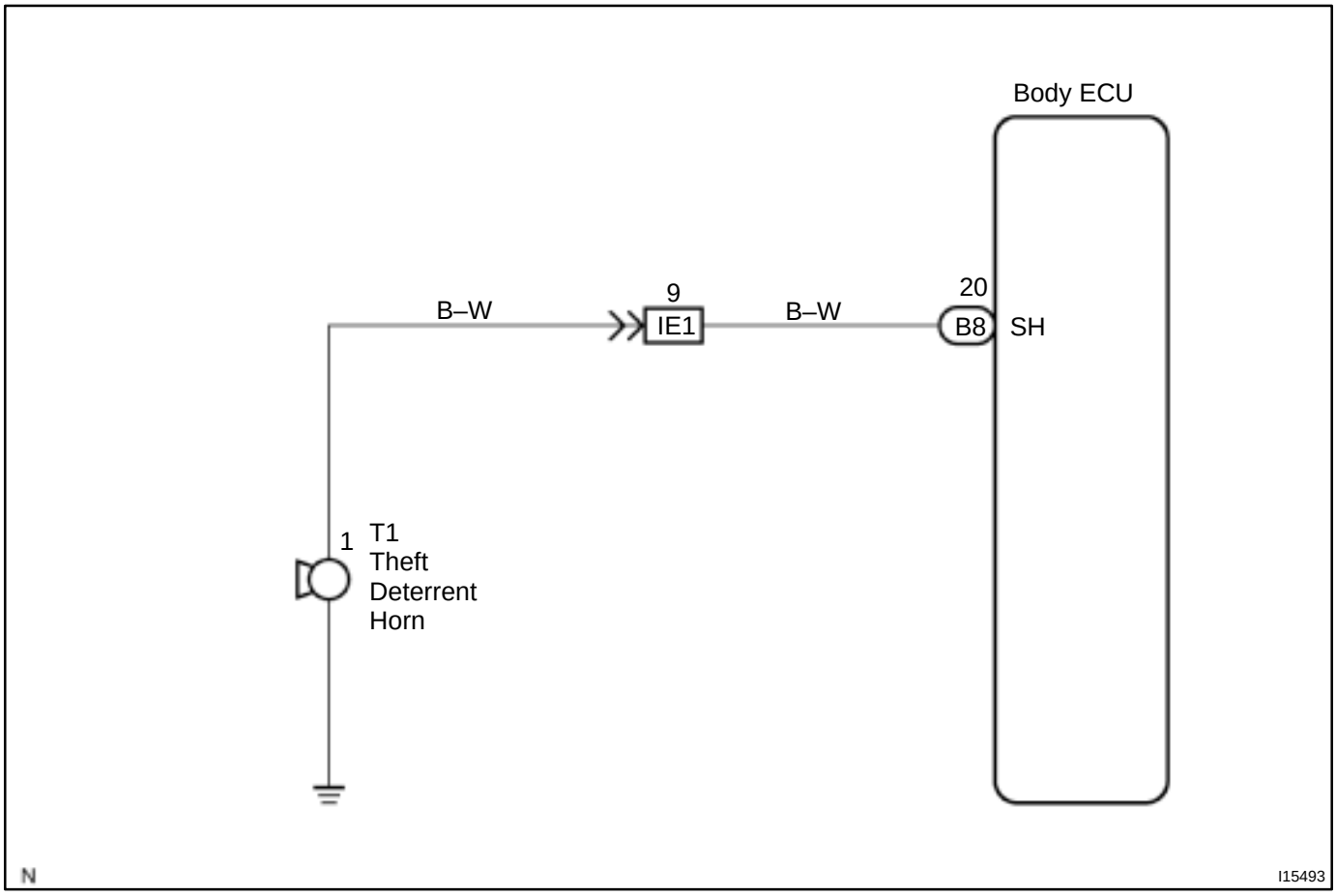

INSPECTION PROCEDURE

HINT:

The flow chart below is based on the premise that the horns blow normally whenever the horn switch is operated. If horn operation is not normal when the horn switch is operated, check the horn switch.

1	**Check voltage between terminal 1 of theft deterrent horn connector and body ground.**

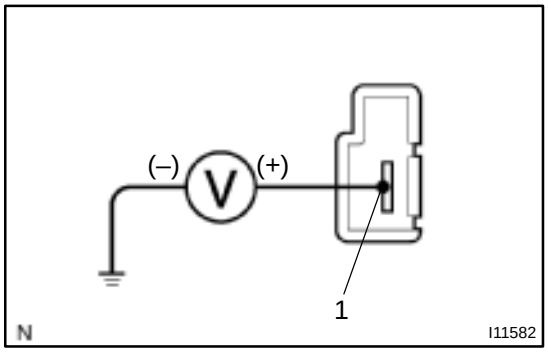

PREPARATION:

Remove the theft deterrent horn and disconnect the connector.

CHECK:

Measure voltage between terminal 1 of theft deterrent horn connector and body ground.

OK:

Voltage: 10 – 14 V

NG → **Check and repair harness and connector between HORN fuse and theft deterrent horn.**

OK

2	**Check theft deterrent horn.**

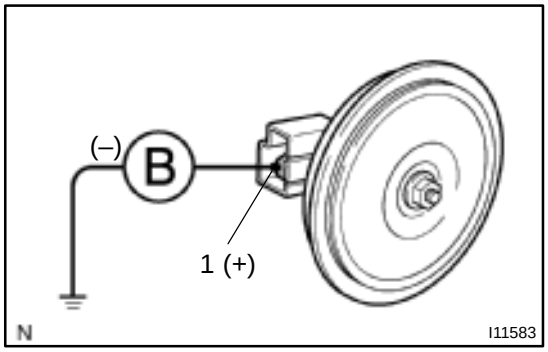

CHECK:

Connect positive (+) lead to terminal 1 and negative (–) lead to ground to theft deterrent horn connector.

OK:

Theft deterrent horn blows.

NG → **Replace theft deterrent horn.**

OK

3	**Check harness and connector between body ECU and theft deterrent horn (See page IN–41).**

NG → **Check and repair harness or connector.**

OK

Check and replace body ECU.

DI6LX–03

Illumination circuit

CIRCUIT DESCRIPTION

Receiving the courtesy signal from either of the door ECU, the Body ECU will make the interior light, ignition light, and foot light come on.

WIRING DIAGRAM

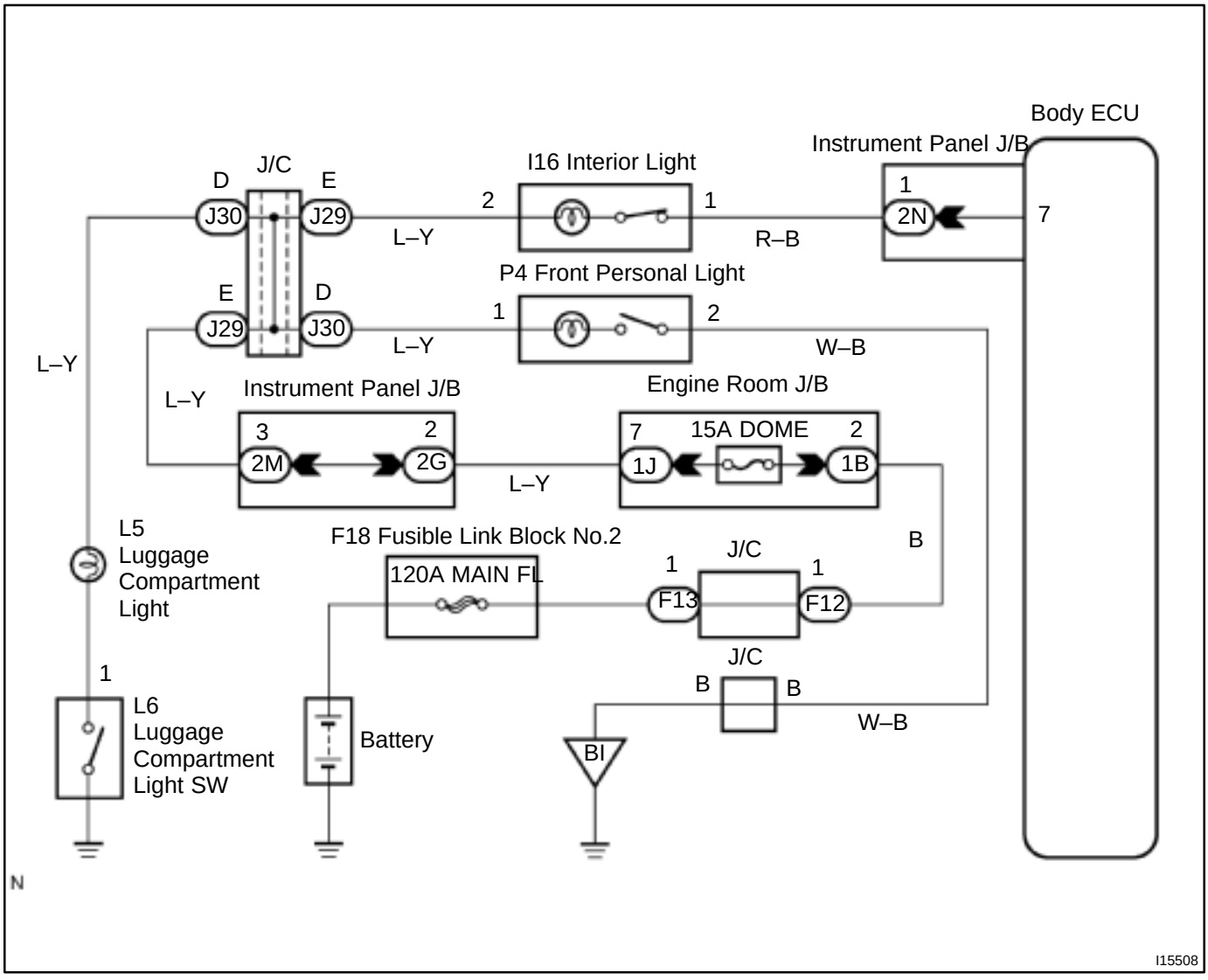

INSPECTION PROCEDURE

1	Check illumination light (Interior light system)(See page BE–27).

NG → Replace the failure light.

OK

2	Check wireharness and connector between each illumination light and Body ECU, battery and each illumination light (See page IN–41).

NG → Repair or replace wireharness or connector.

OK

Proceed to next circuit inspection shown on problem symptoms table (See page DI–683).

DI7NY–01

Indicator Light Circuit

CIRCUIT DESCRIPTION

When the theft deterrent system is preparing to set, this circuit lights up the indicator light. When the system has been set, it continuously turns the indicator light on for 0.2 secs. and turns it off for 1.8 secs., thus blinking the indicator light.

WIRING DIAGRAM

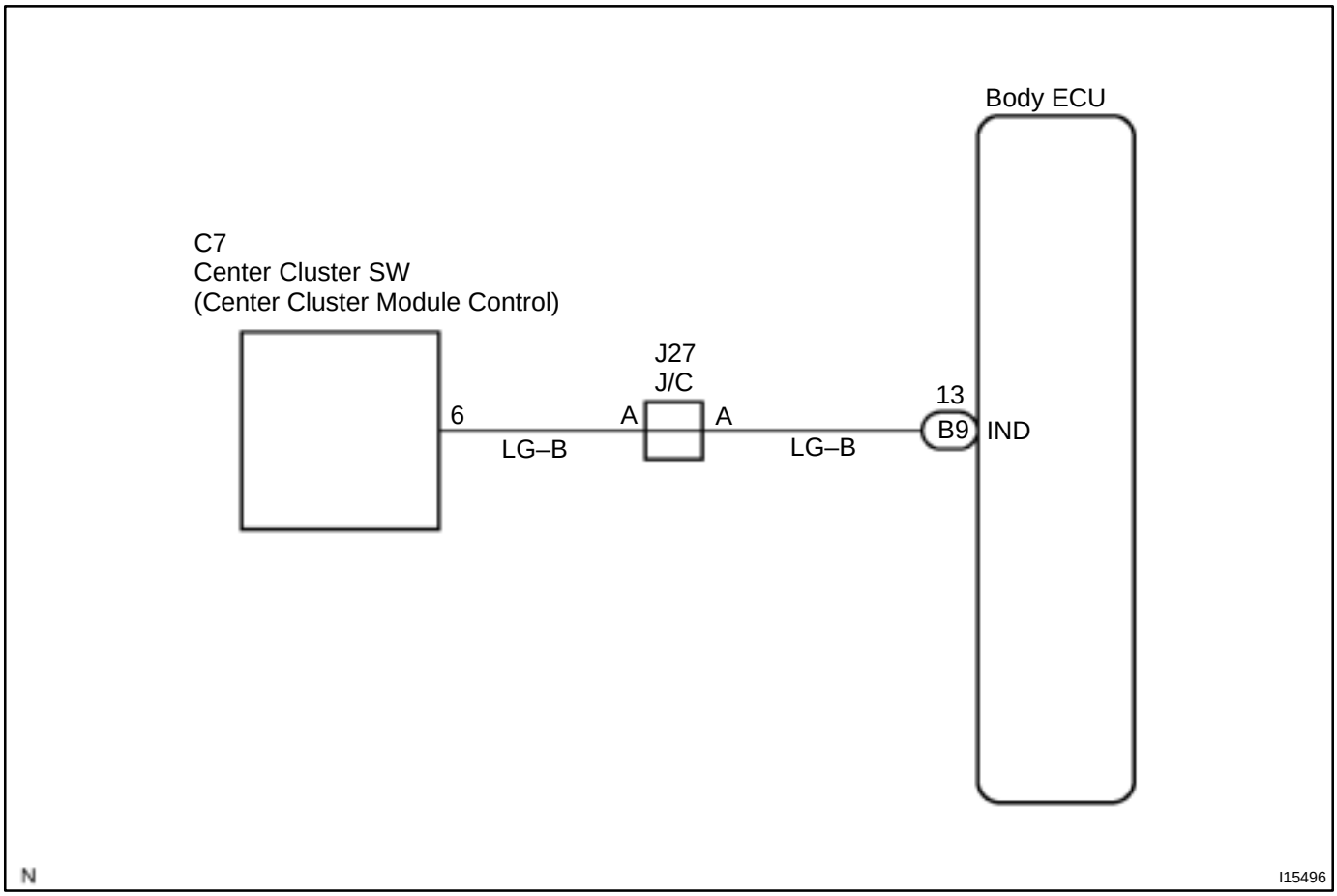

INSPECTION PROCEDURE

1	**Check indicator light. (center cluster module control)**

NG → **Replace center cluster module control.**

OK

2	**Check harness and connector between body ECU and indicator light, indicator light and body ground (See page IN–41).**

NG → **Repair or replace harness or connector.**

OK

Check and replace body ECU.*1

*1: When there is a malfunction that the theft deterrent system cannot be set, proceed to the next numbered circuit inspection shown on problem symptom table (See page DI–683).

DI2EY–04

Door lock control switch circuit

CIRCUIT DESCRIPTION

Door lock control switch circuit can be checked using DTC check. (Refer to DI–765)

WIRING DIAGRAM

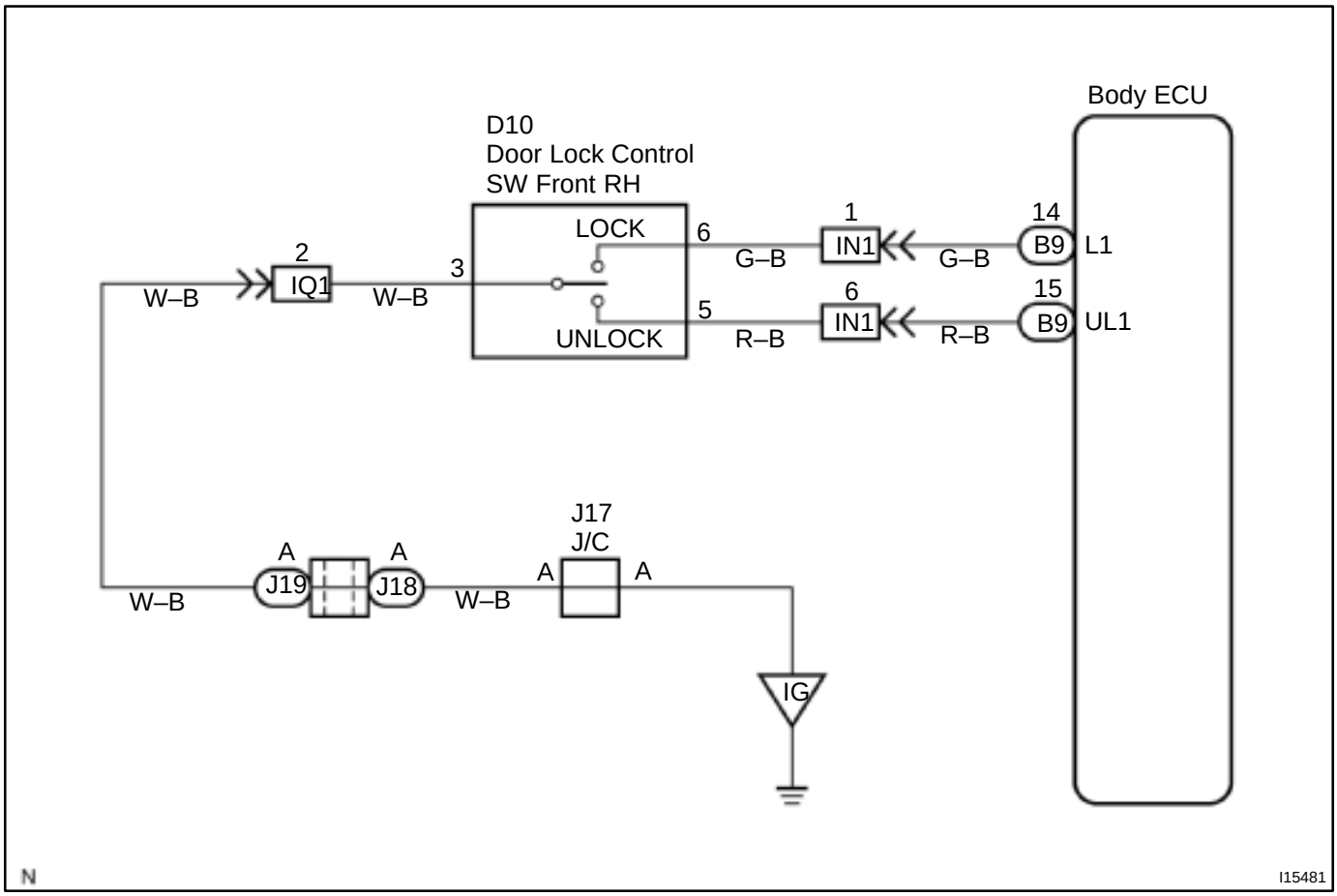

INSPECTION PROCEDURE

1	Check the door lock control switch (See page BE–62).

NG → Replace the door lock control switch.

OK

2	Check wireharness and connector between door lock control switch and body ECU.

NG → Repair or replace wireharness or connector.

OK

Proceed to next circuit inspection shown on problem symptoms table (See page DI–683).

DI6R6–04

Door Key Lock and Unlock Switch Circuit

CIRCUIT DESCRIPTION

The door key lock and unlock switch is built in the door key cylinder. When the key is turned to the lock side, terminal 3 of the switch is grounded and when the key is turned to the unlock side, terminal 2 of the switch is grounded.

WIRING DIAGRAM

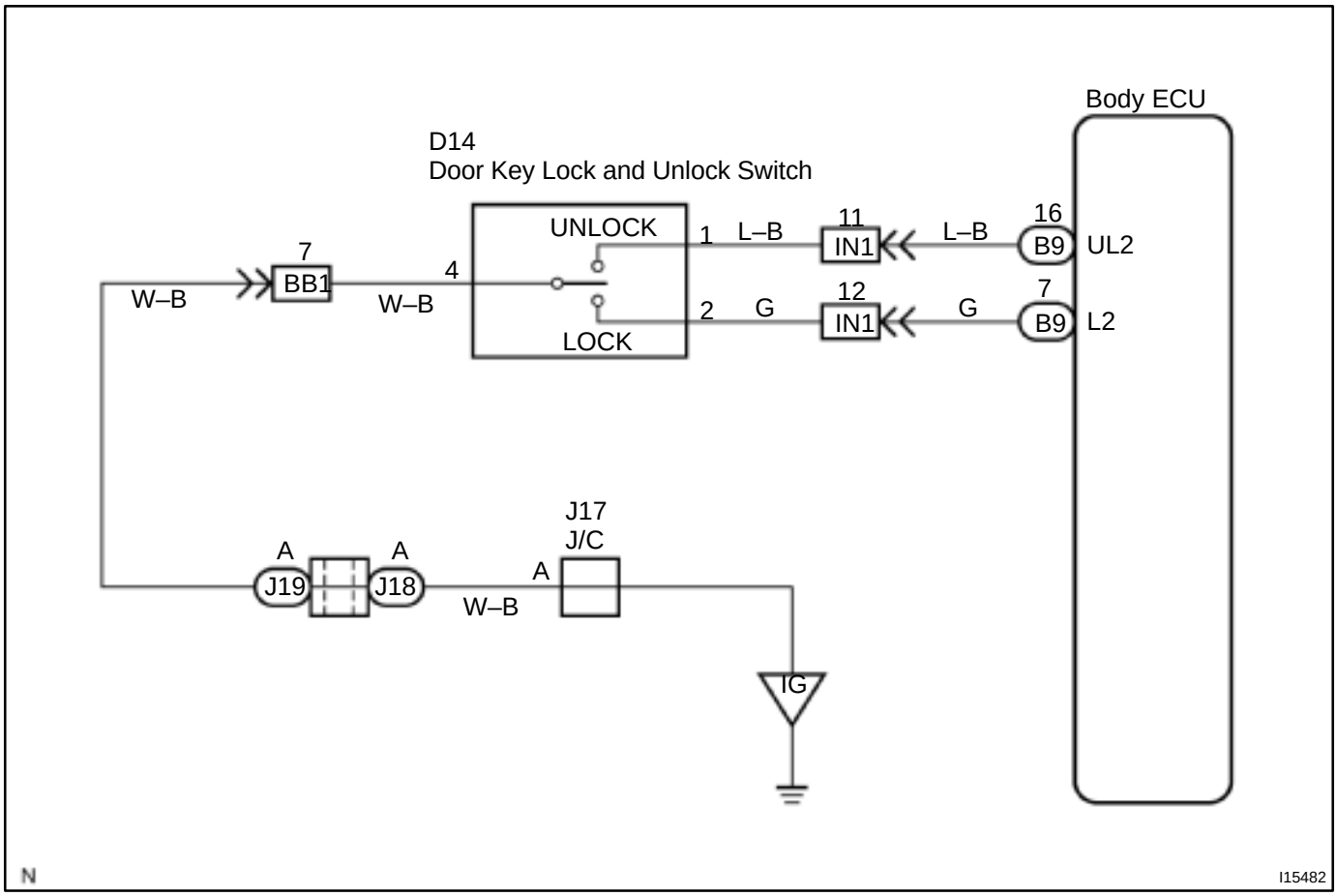

INSPECTION PROCEDURE

1	Check the door key lock and unlock switch (See page DI–708).

NG → Replace the door key lock and unlock switch.

NG

2	Check wireharness and connector between door key lock and unlock switch and body ECU (See page IN–41).

NG → Repair or replace wireharness or connector.

OK

Proceed to next circuit inspection shown on problem symptoms table (See page DI–683).

DI7NT–01

Door unlock detection switch

CIRCUIT DESCRIPTION

The door unlock detection switch is built in the door lock motor assembly. This switch is ON when the door lock knob is in the unlock position and OFF when the lock knob is in the lock position. The ECU detects the door lock knob conditions is this circuit. It is used as one of the operating conditions for the key confinement prevention function.

WIRING DIAGRAM

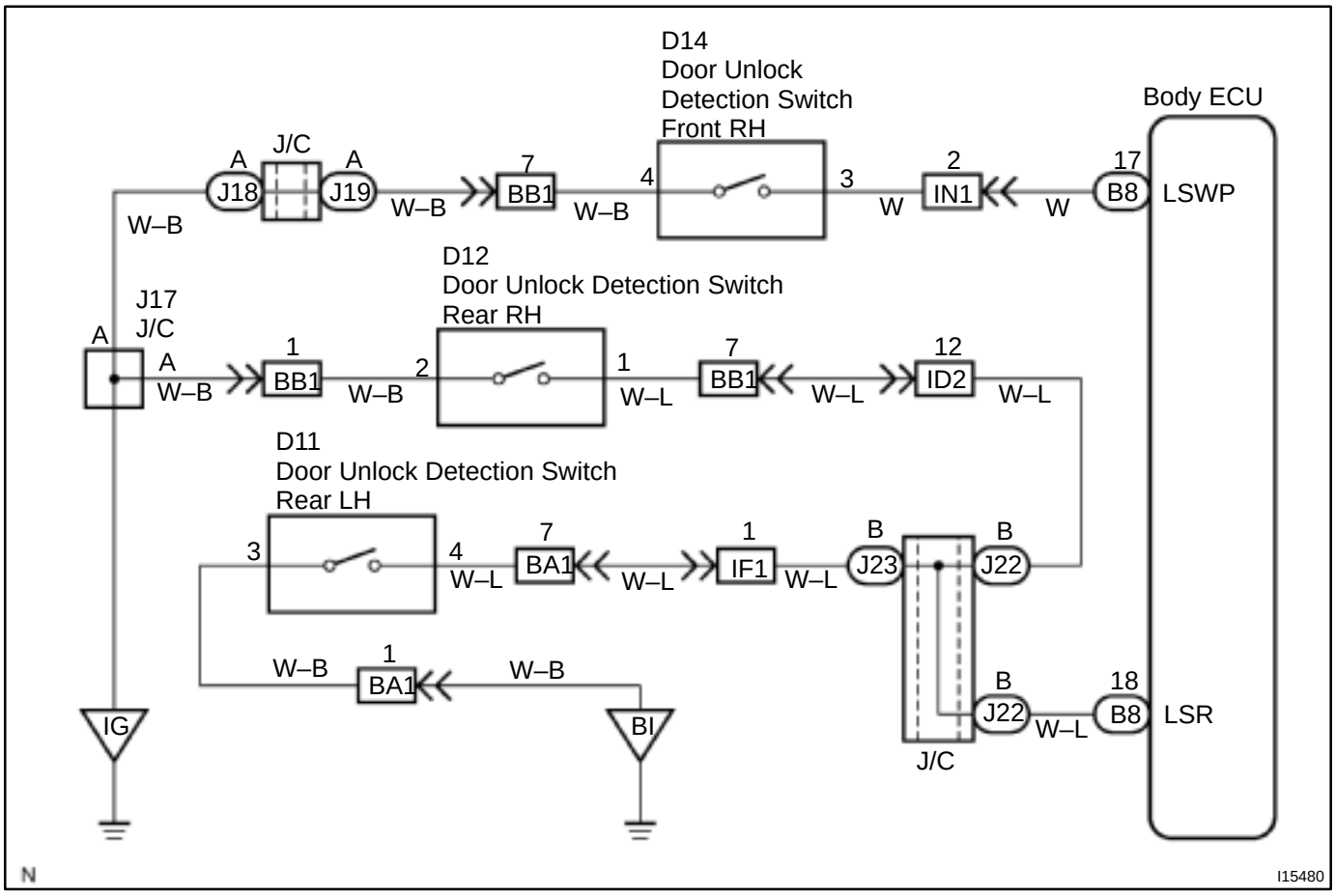

INSPECTION PROCEDURE

1	Check door unlock detection switch (See page DI–710).

NG → Replace the door lock motor.

OK

2	Check wireharness and connector between door unlock detection switch and body ECU.

NG → Repair or replace wireharness or connector.

OK

Proceed to next circuit inspection shown on problem symptoms table (See page DI–683).

DI7NS–01

Door lock motor circuit

WIRING DIAGRAM

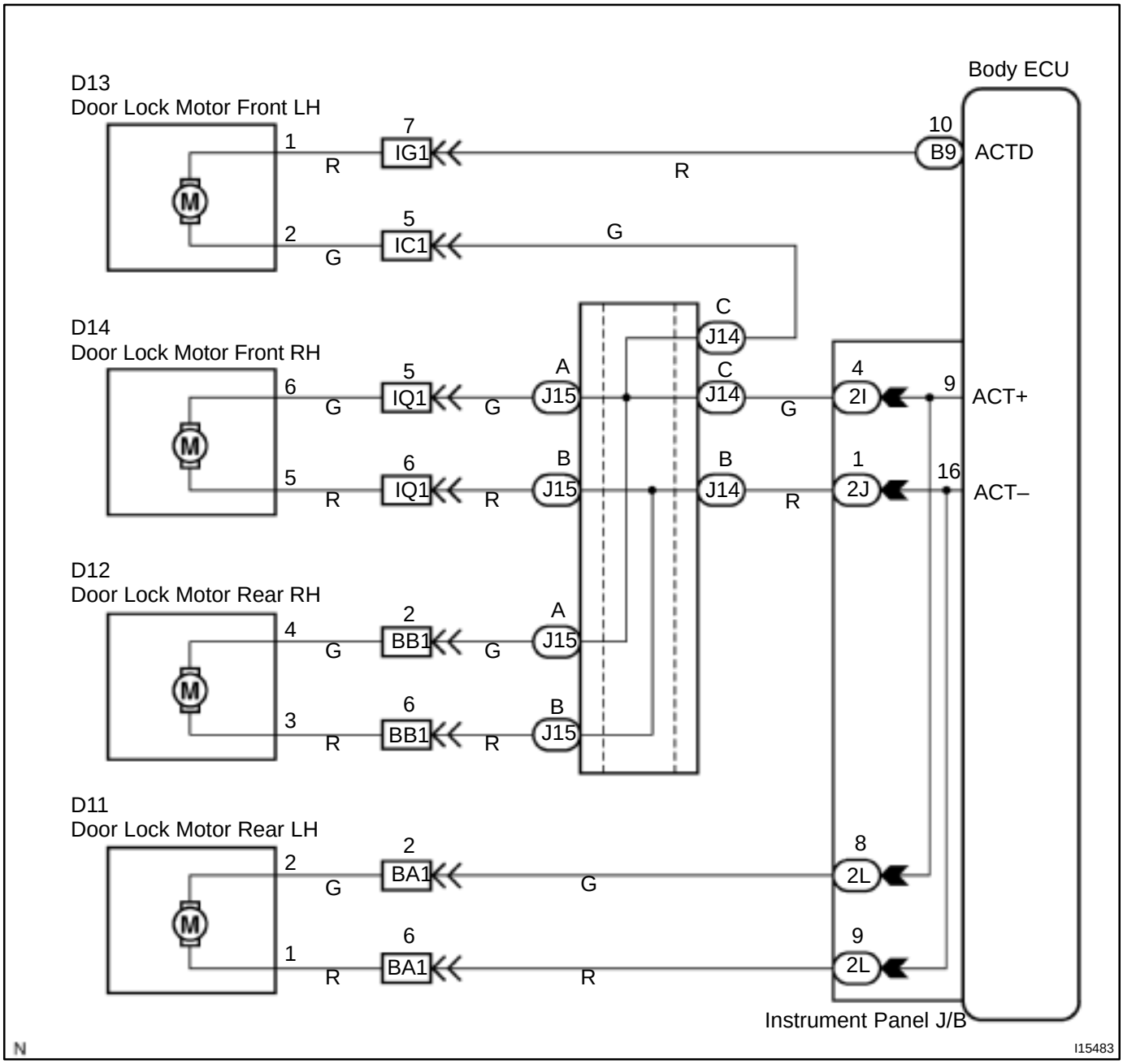

INSPECTION PROCEDURE

1	Check door lock motor (See page BE–62).

NG → Replace the door lock motor.

OK

2	Check wireharness and connector between door lock motor and body ECU.

NG → Repair or replace wireharness or connector.

OK

Proceed to next circuit inspection shown on problem symptoms table (See page DI–683).

DI7NU–01

Door Courtesy Switch Circuit

CIRCUIT DESCRIPTION

The door courtesy switch goes on when the door is opened and goes off when door is closed.

WIRING DIAGRAM

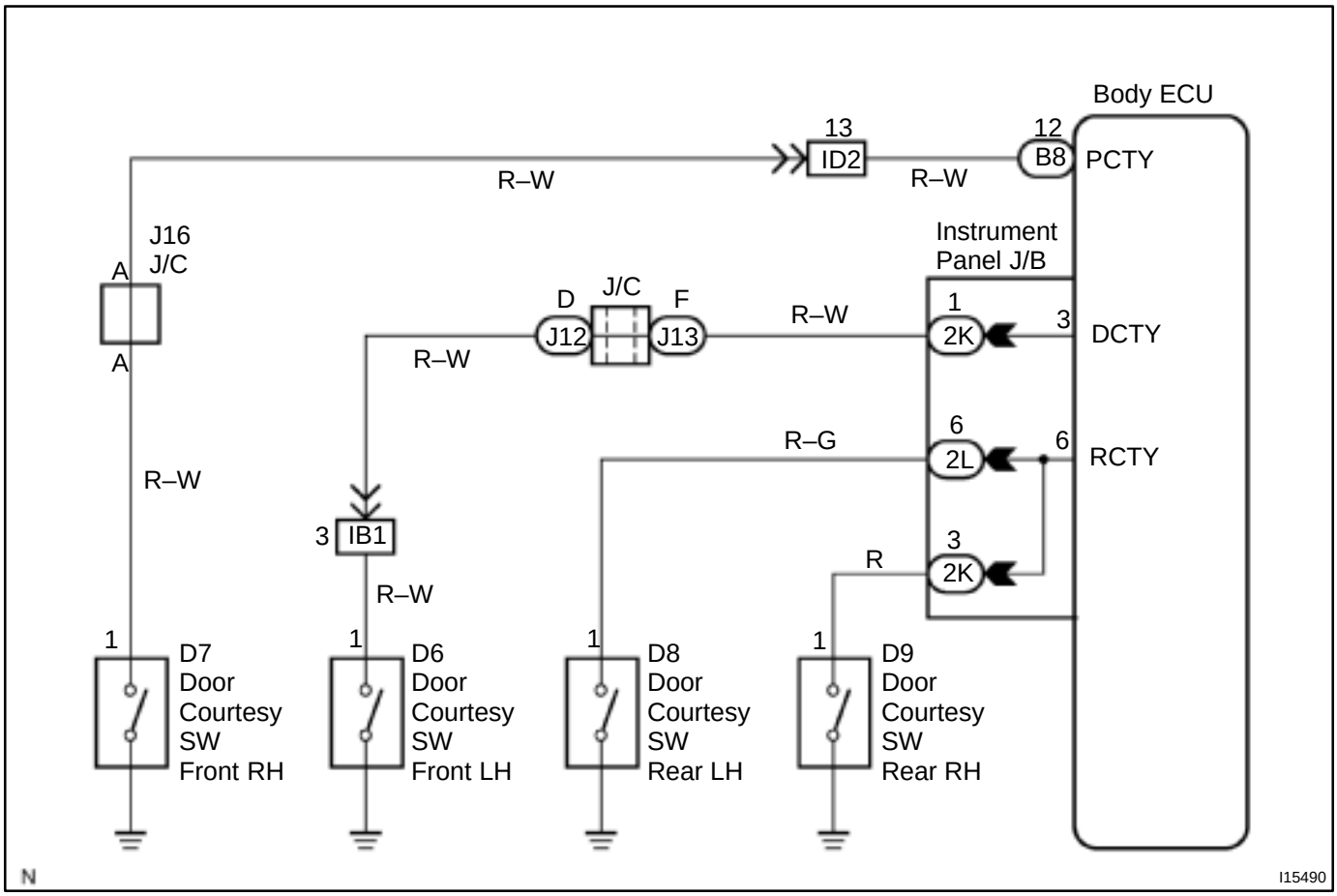

INSPECTION PROCEDURE

1	Check courtesy switch (See page BE–27).

NG → Replace the courtesy switch.

OK

2	Check that there is a grounding malfunction caused by looseness of the tighten screw.

NG → Install screw.

OK

3	Check wireharness and connector between courtesy switch and body ECU (See page IN–41).

NG → Repair or replace wireharness or connector.

OK

Proceed to next circuit inspection shown on problem symptoms table (See page DI–683).

DI6R2–04

Driver Buckle Switch Circuit

CIRCUIT DESCRIPTION

When the buckle switch of the driver's seat is ON with the ignition switch ON, the body ECU sends a signal to make the seat belt warning light for the driver's seat light up and to sound a buzzer.
When the buckle switch of the passenger seat is ON and the passenger seat belt occupant detecting sensor is ON with the ignition switch ON, the body ECU sends a signal to make the seat belt warning light for the passenger seat light up.

WIRING DIAGRAM

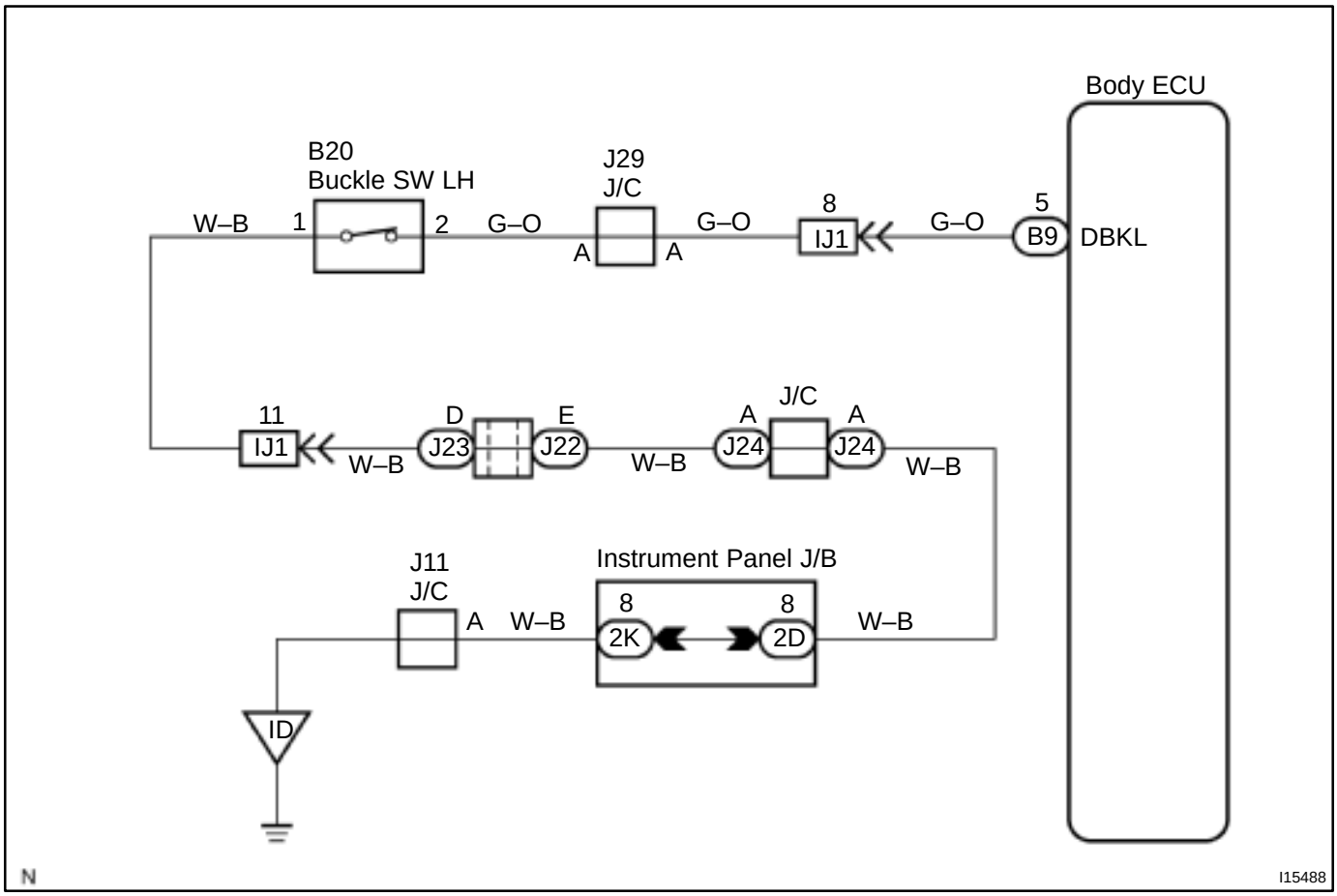

INSPECTION PROCEDURE

1	Check buckle switch (See page DI–716).

NG → Replace the buckle switch.

OK

2	Check wire harness and connector between buckle switch and body ground (See page IN–41).

NG → Repair or replace wire harness or connector.

OK

Proceed to next circuit inspection shown on problem symptoms table (See page DI–683).

DI7NR–01

Passenger buckle switch and seat belt warning occupant detection sensor

CIRCUIT DESCRIPTION

This circuit detects the conditions of the passenger buckle switch and the seat belt warning occupant detection sensor, and makes the passenger seat belt warning flash.

WIRING DIAGRAM

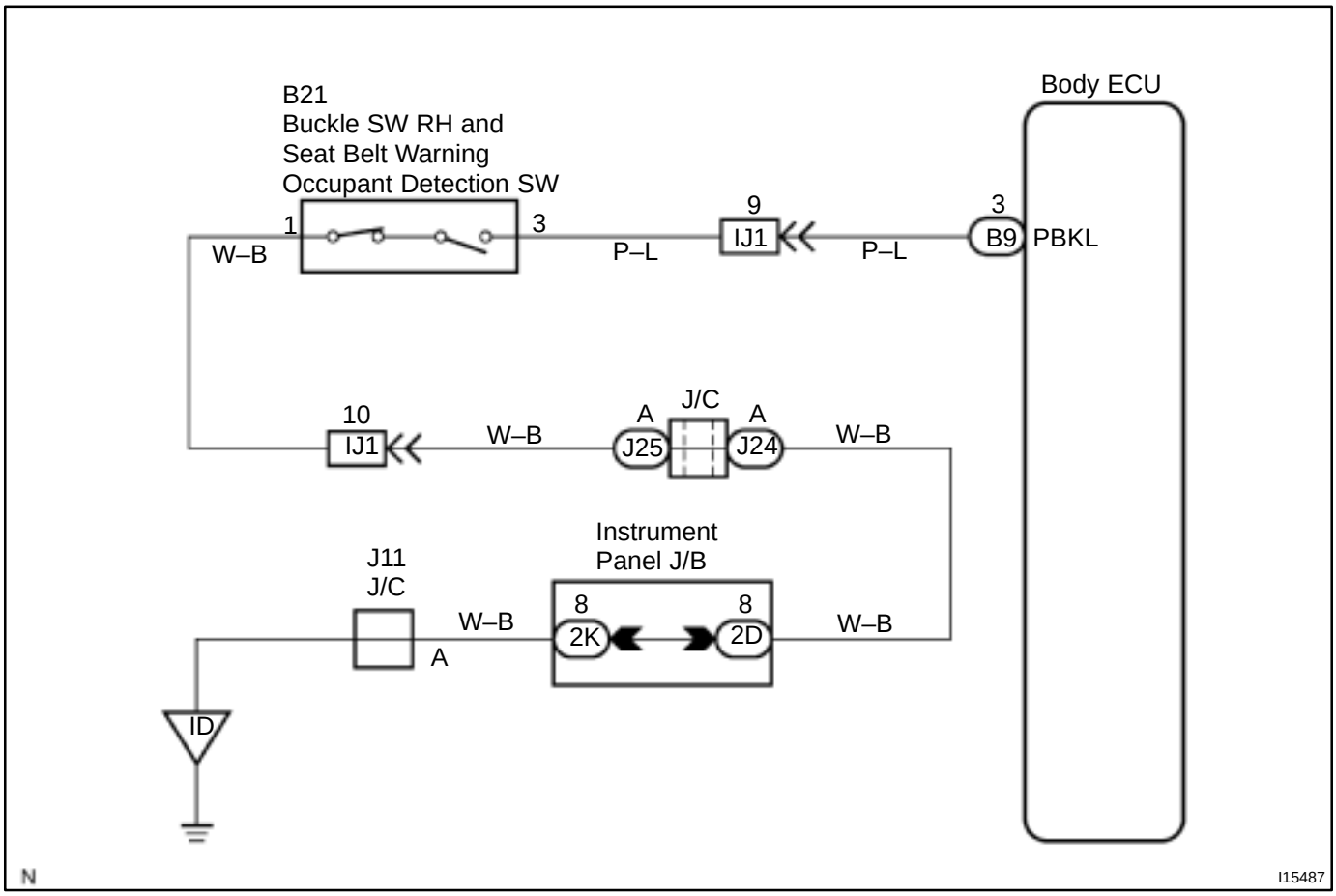

INSPECTION PROCEDURE

1	Check passenger buckle switch (See page DI–718).

NG → Replace the passenger buckle switch.

OK ↓

2	Check seat belt warning occupant detection sensor (See page BE–42).

NG → Replace the seat belt warning occupant detection sensor.

OK ↓

3	Check wireharness and connector between seat belt warning occupant detection sensor and body ECU, passenger buckle switch and seat belt warning occupant detection sensor, passenger buckle switch and body ground.

NG → Repair or replace wireharness or connector.

OK ↓

Proceed to next circuit inspection shown on problem symptoms table (See page DI–683).

DI7NV–01

Engine Hood Courtesy Switch Circuit

CIRCUIT DESCRIPTION

The engine hood courtesy switch is built into the engine hood lock assembly and goes ON when the engine hood is opened and goes OFF when the engine hood is closed.

WIRING DIAGRAM

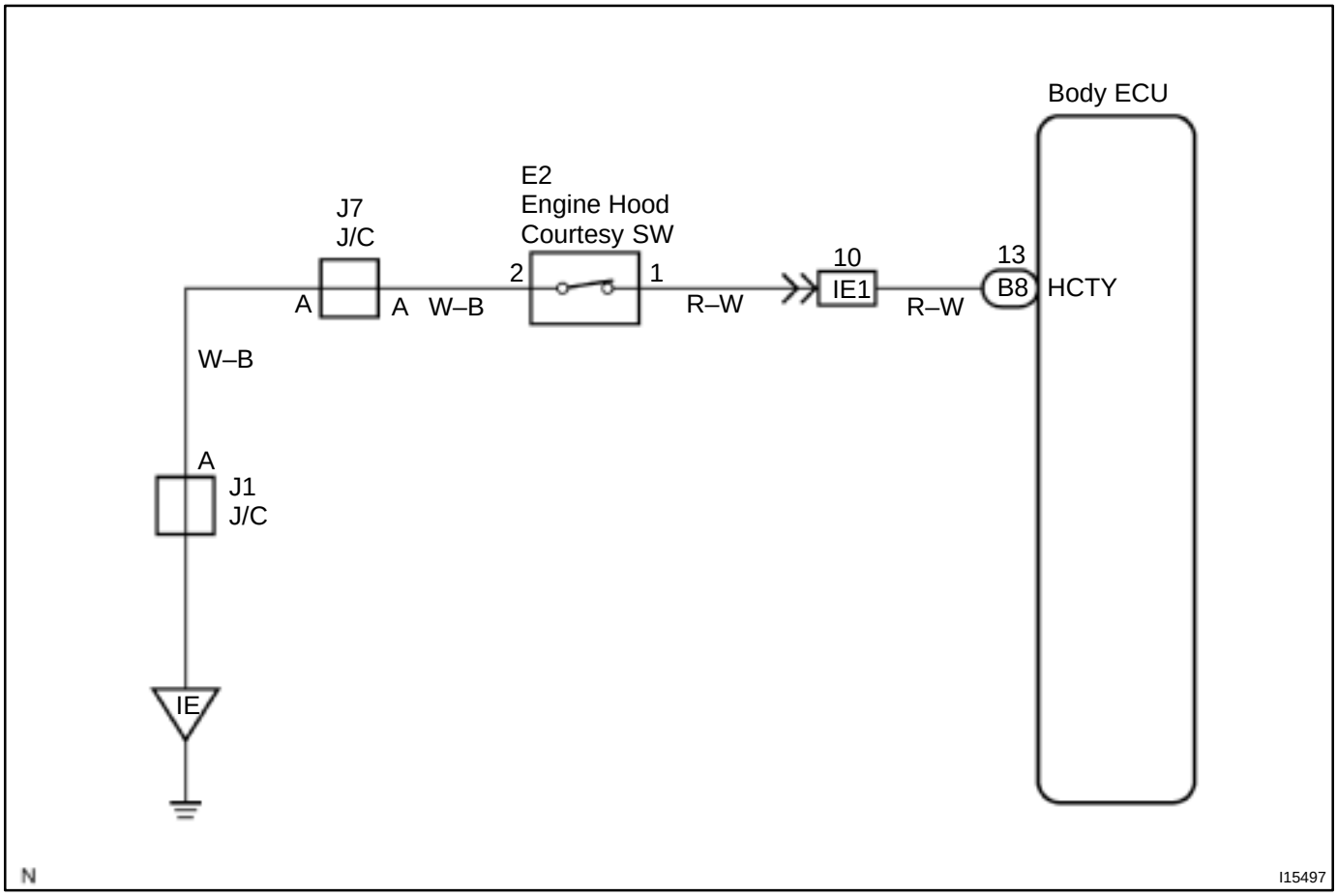

INSPECTION PROCEDURE

1	**Check engine hood courtesy switch.**

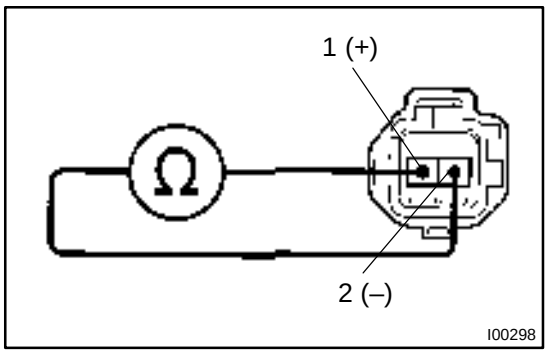

PREPARATION:

(a) Remove engine hood lock assembly.

(b) Disconnect engine hood courtesy switch connector.

CHECK:

Check continuity between terminals 1 and 2 when engine hood lock is locked and unlocked.

OK:

Engine hood lock	Tester connection	Specified condition
LOCK	–	No continuity
UNLOCK	1 – 2	Continuity

NG → **Replace engine hood courtesy switch.**

OK

2	**Check harness and connector between body ECU and switch, switch and body ground (See page IN–41).**

NG → **Repair or replace harness or connector.**

OK

Check and replace body ECU (See page IN–41).

DI7NW–01

Luggage Courtesy Switch Circuit

CIRCUIT DESCRIPTION

The luggage courtesy switch goes on when luggage compartment door is opened and goes off when luggage compartment door is closed.

WIRING DIAGRAM

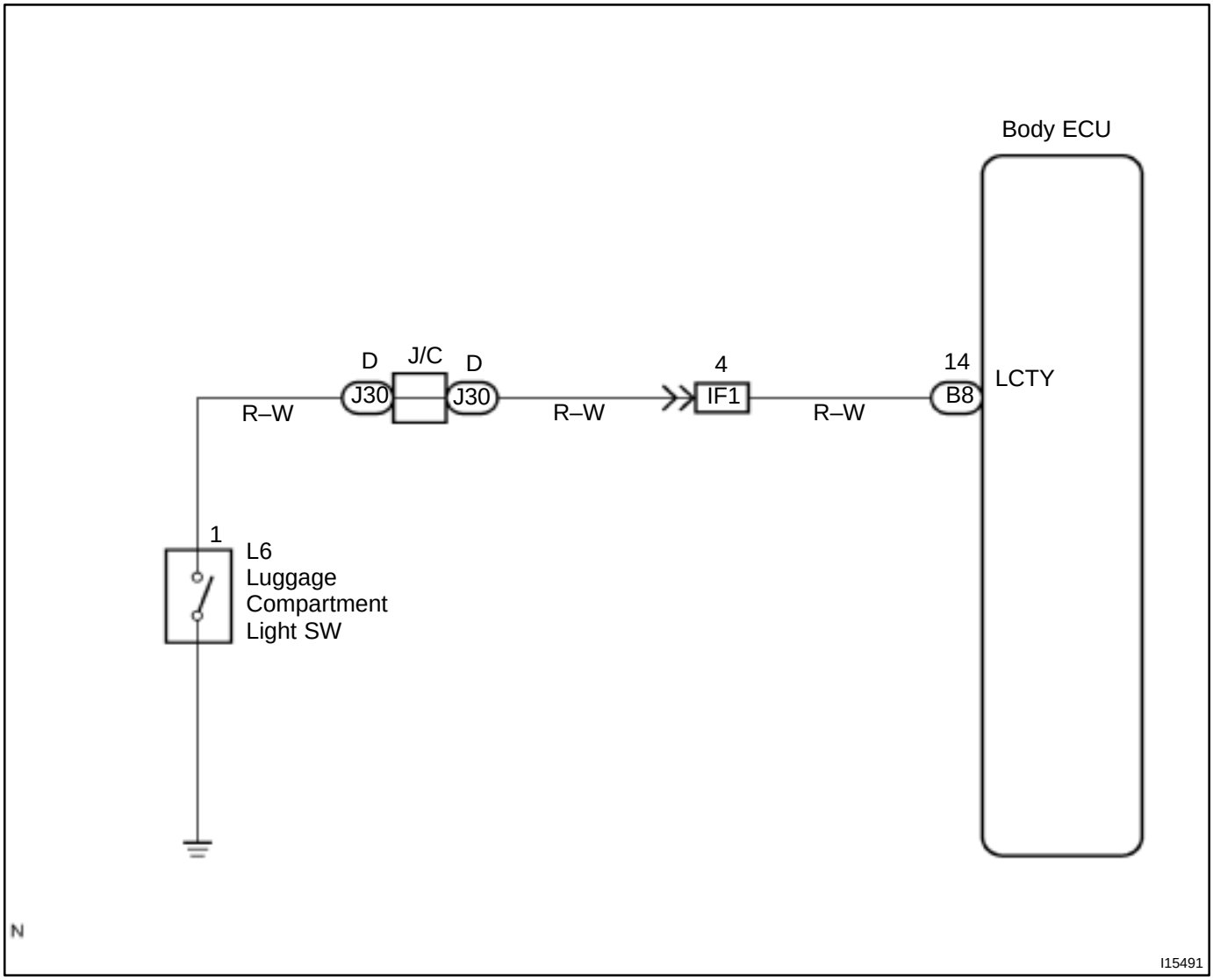

INSPECTION PROCEDURE

1	Check luggage courtesy switch (See page BE–27).

NG → Replace the luggage courtesy switch.

OK

2	Check wire harness and connector between luggage courtesy switch and body ECU (See page IN–41).

NG → Repair or replace wire harness or connector.

OK

Proceed to next circuit inspection shown on problem symptoms table (See page DI–683).

DI2BN–05

Power window master switch circuit

CIRCUIT DESCRIPTION

Power window master switch circuit can be checked using DTC check. (See page DI–765)

WIRING DIAGRAM

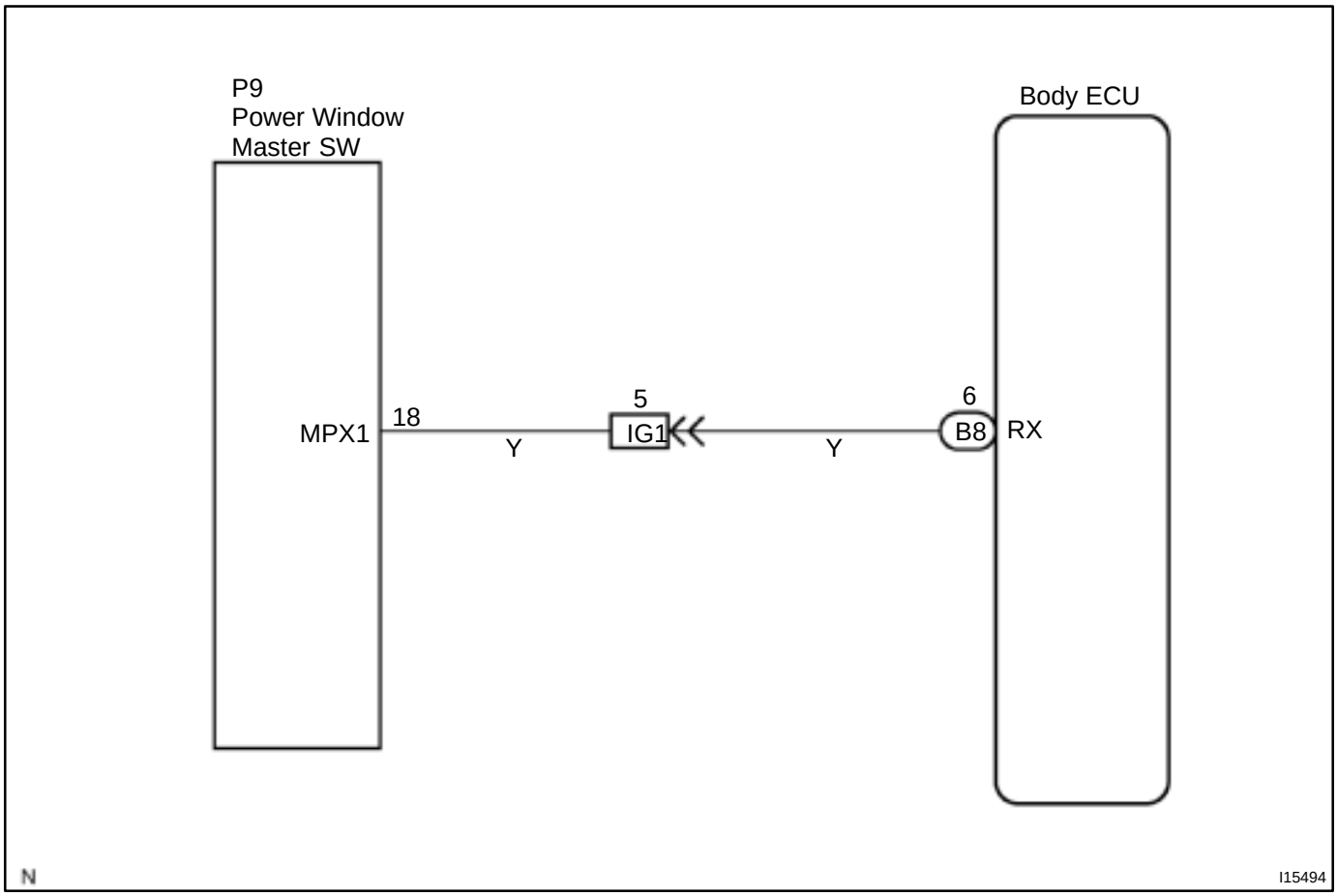

INSPECTION PROCEDURE

1	Check the power window master switch circuit using DTC check. (See page DI–765)

OK → Proceed to next circuit inspection shown on problem symptom table (See page DI–683).

OK

2	Check the power window master switch (See page BE–56).

NG → Replace the power window master switch.

OK

3	Check wireharness and connector between power window master switch and body ECU.

NG → Repair or replace wireharness or connector.

OK

Proceed to next circuit inspection shown on problem symptom table (See page DI–683).

DI7NX–01

Power window switch circuit

CIRCUIT DESCRIPTION

Power window switch circuit can be checked using DTC check. (Refer to DI–762)

WIRING DIAGRAM

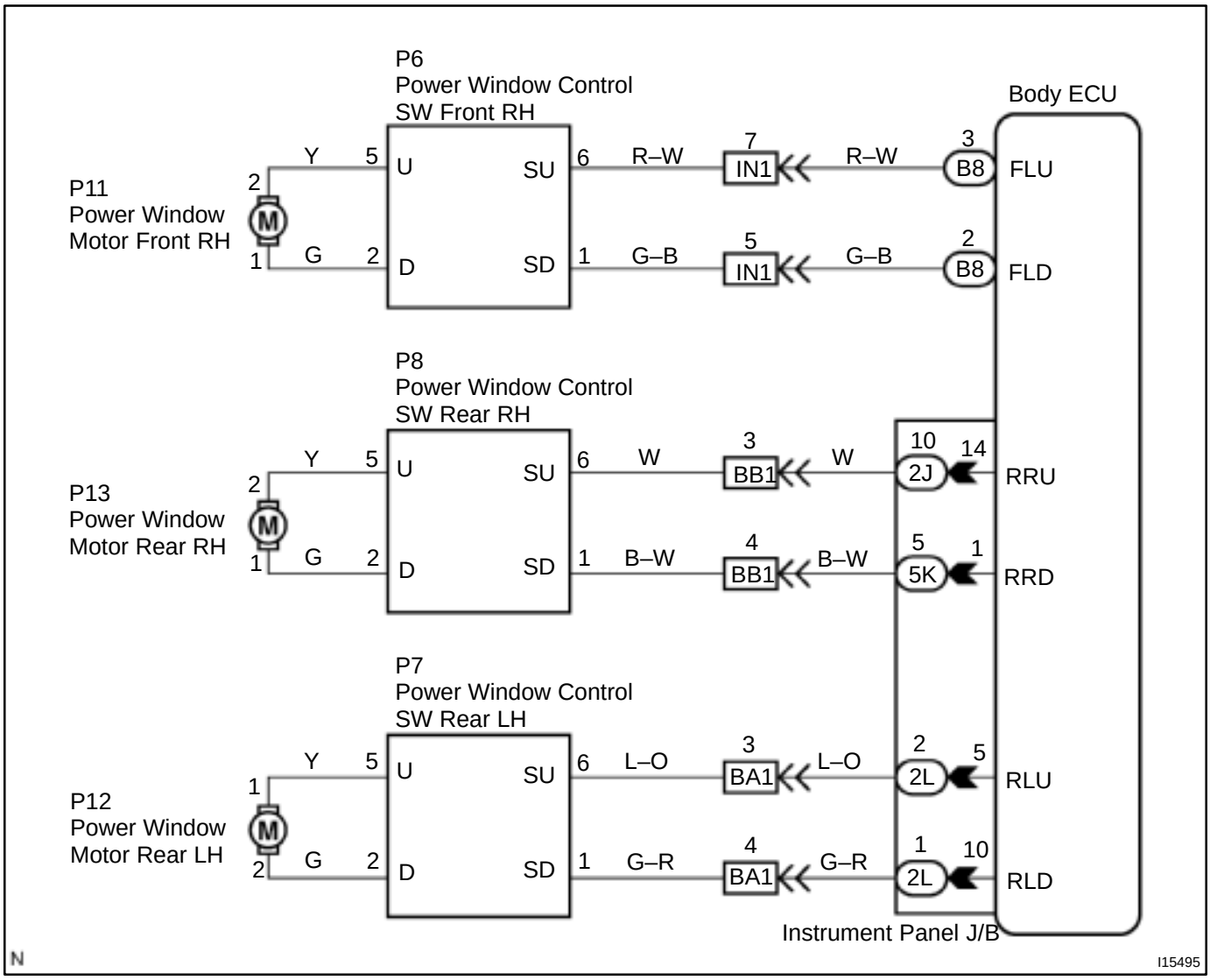

INSPECTION PROCEDURE

1	Check the power window switch (See page DI–726).

NG → Replace the power window switch.

OK

2	Check wireharness and connector between power window switch and body ECU (See page IN–41).

NG → Repair or replace wireharness or connector.

OK

Proceed to next circuit inspection shown on problem symptoms table (See page DI–683).

DI7O0–01

Wireless door lock tuner circuit

CIRCUIT DESCRIPTION

The signal from the transmitter will be input to the body ECU through RDA line. RDA line is diagnosed by the body ECU, so check DTC also in case of the failure of the wireless function.

WIRING DIAGRAM

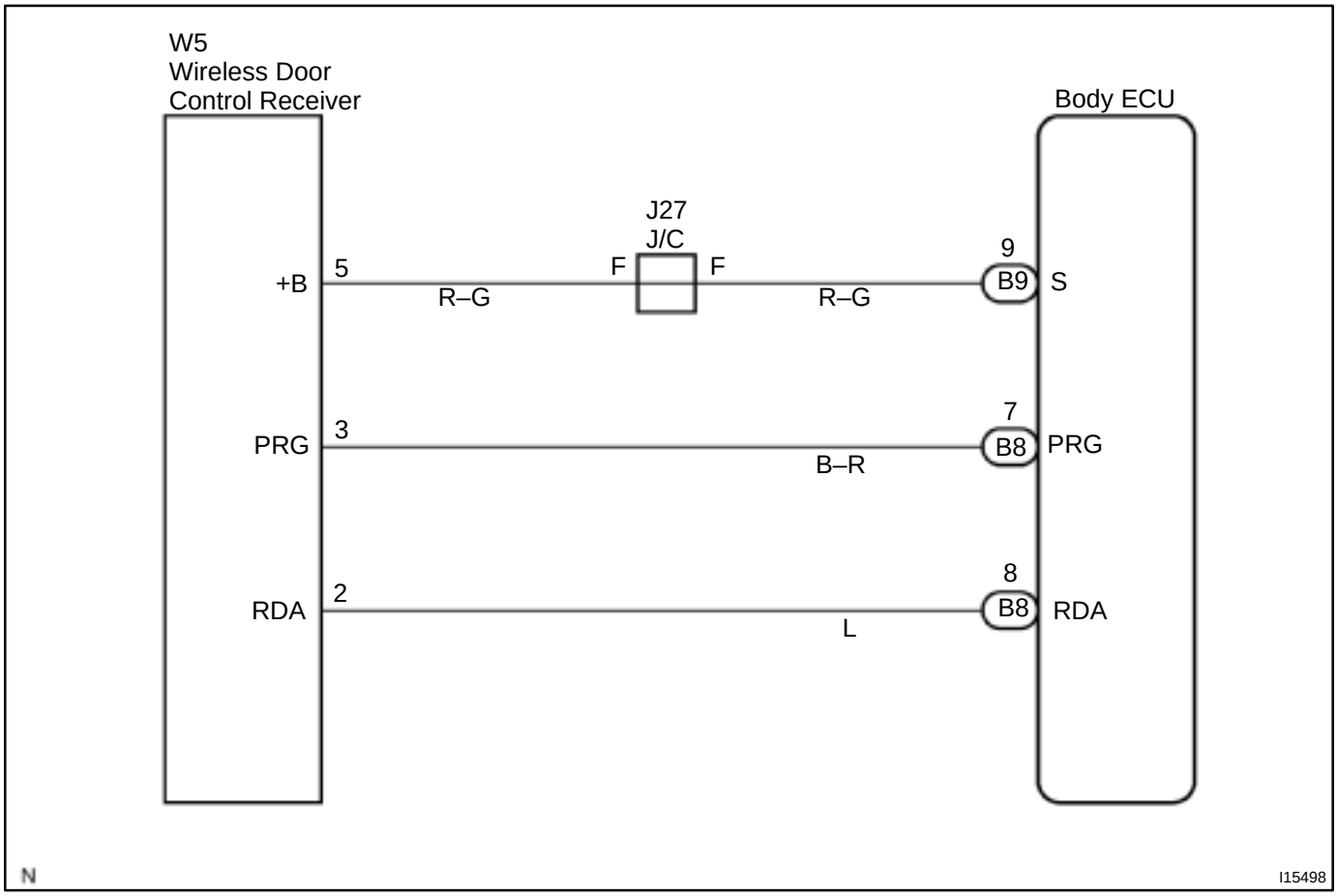

INSPECTION PROCEDURE

1	**Check that DTC 42 is not output**

NG → **Check the RDA line.**

OK

2	**Check wireharness**

PREPARATION:
Disconnect connectors of wireless door lock tuner and of body ECU.
CHECK:
Check continuity between terminals RCO of wireless door lock tuner and RCO of body ECU.
OK:
Continuity

NG → **Repair or replace wireharness**

OK ↓

3	**Check the wireless door lock tuner**

CHECK:
Replace the wireless door lock tuner and check if it recovers normally.
OK:
Must be recovered normally.

NG → **Proceed to next circuit inspection shown on problem symptoms table.(See page DI–683)**

NG ↓

Failure of the original wireless door lock tuner.

DI2BM–11

CIRCUIT INSPECTION

Power source circuit

CIRCUIT DESCRIPTION

This circuit provides power to operate the driver door ECU.

WIRING DIAGRAM

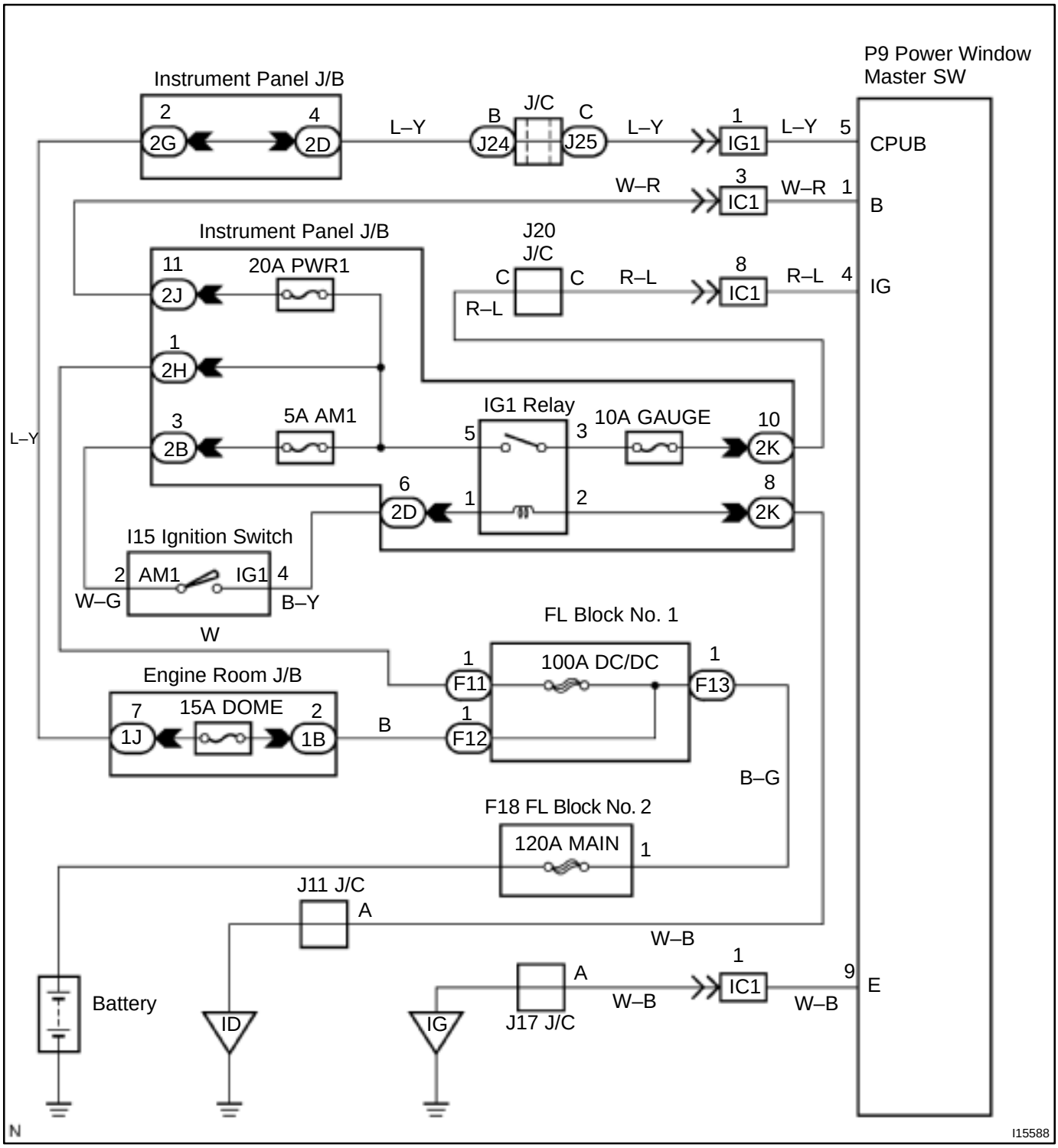

INSPECTION PROCEDURE

1	**Check PWR1, AM1 and DOME fuse.**

CHECK:
Check continuity of PWR1, AM1 and DOME fuse.
OK:
Continuity

NG → **Replace the failure fuse.**

OK

2	**Check voltage between terminals B, CPUB, IG and GND of driver door ECU connector.**

PREPARATION:
Turn ignition switch ON.
CHECK:
Measure voltage between terminals IG, and GND.
OK:
Voltage: 10 – 14V
PREPARATION:
(a) Turn ignition switch OFF.
(b) Disconnect the driver door ECU connector.
CHECK:
Measure voltage between terminals B, CPUB and GND.
OK:
Voltage: 10 – 14V

OK → **Proceed to next circuit inspection shown on problem symptoms table (See page DI–734).**

NG

3	**Check wireharness and connector between ECU and body ground.**

NG → **Repair or replace wireharness or connector**

OK

Check and repair wireharness and connector between ECU and battery.

DI2BP–08

Door unlock detection switch circuit

CIRCUIT DESCRIPTION

The door unlock detection switch is built in the door lock motor assembly. This switch is ON when the door lock knob is in the unlock position and OFF when the lock knob is in the lock position. The ECU detects the door lock knob conditions is this circuit. It is used as one of the operating conditions for the key confinement prevention function.

WIRING DIAGRAM

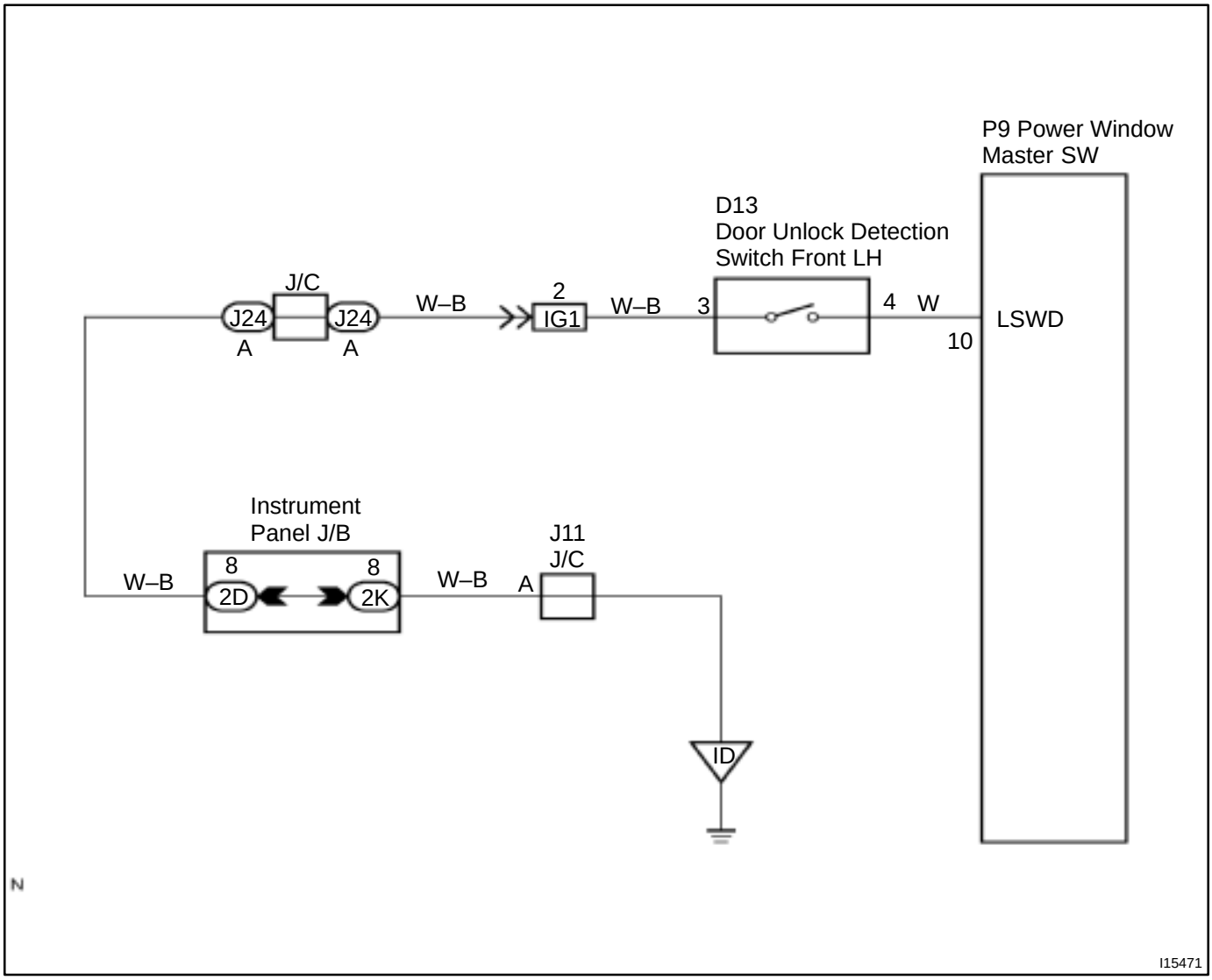

INSPECTION PROCEDURE

1	Check door unlock detection switch (See page BE–62).

NG → Replace the door lock motor.

OK

2	Check wireharness and connector between door unlock detection switch and driver door ECU.

NG → Repair or replace wireharness or connector.

OK

Proceed to next circuit inspection shown on problem symptoms table (See page DI–734).

DI2BQ–08

Door key lock and unlock switch circuit

CIRCUIT DESCRIPTION

The door key lock and unlock switch is built in the door key cylinder. When the key is turned to the lock side, terminal 3 of the switch is grounded and when the key is turned to the unlock side, terminal 2 of the switch is grounded.

Door key lock and unlock switch can be checked using DTC check. (Refer to DI–765)

WIRING DIAGRAM

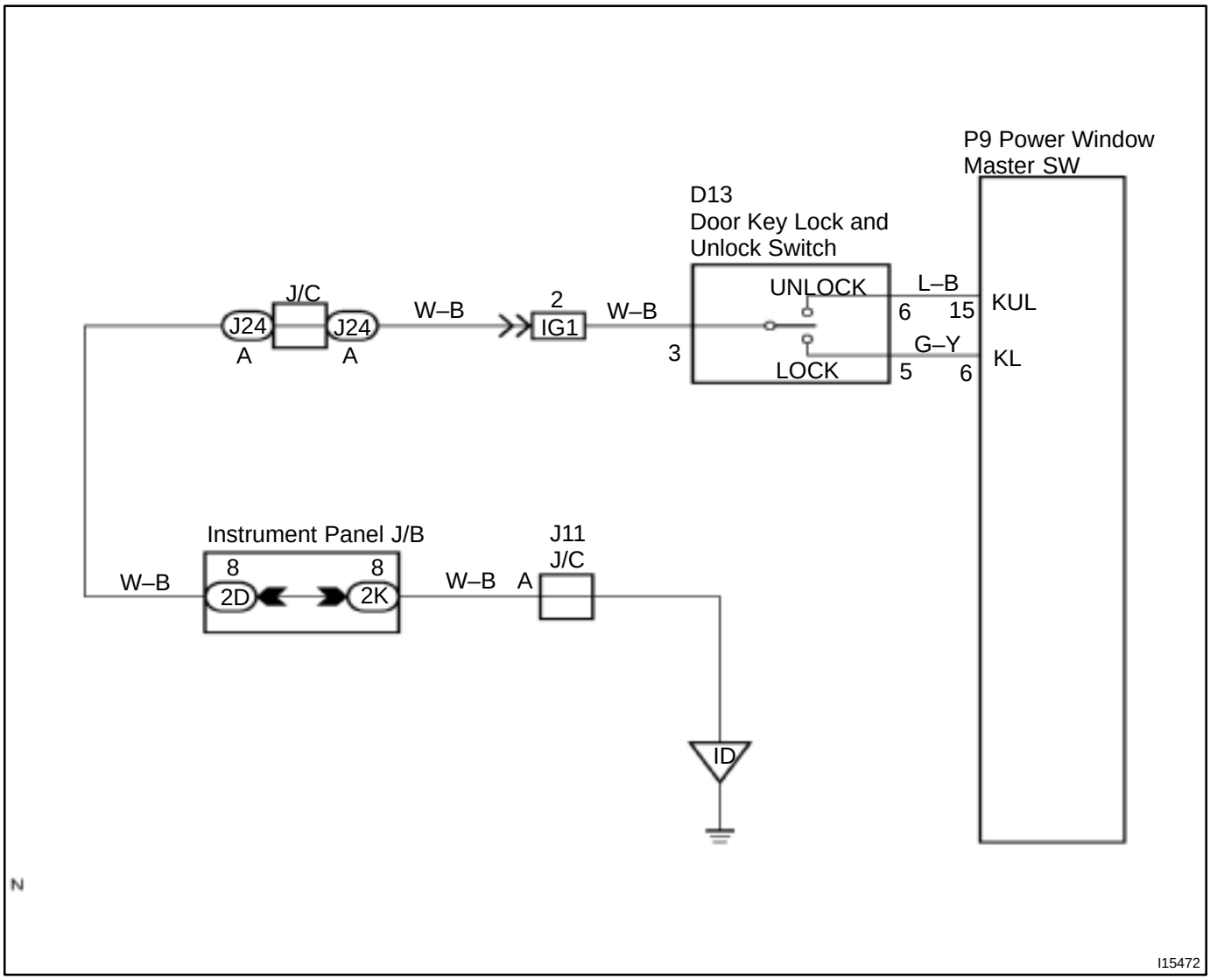

INSPECTION PROCEDURE

1	Check the door key lock and unlock switch using DTC check (See page DI–765).

OK → Proceed to next circuit inspection shown on problem symptoms table (See page DI–683).

NG

2	Check the door key lock and unlock switch (See page BE–62).

NG → Replace the door key lock and unlock switch.

NG

3	Check wireharness and connector between door key lock and unlock switch and driver door ECU.

NG → Repair or replace wireharness or connector.

OK

Proceed to next circuit inspection shown on problem symptoms table (See page DI–734).

Door courtesy light and courtesy switch circuit

CIRCUIT DESCRIPTION

The door courtesy switch goes on when the door is opened and goes off when door is closed.

WIRING DIAGRAM

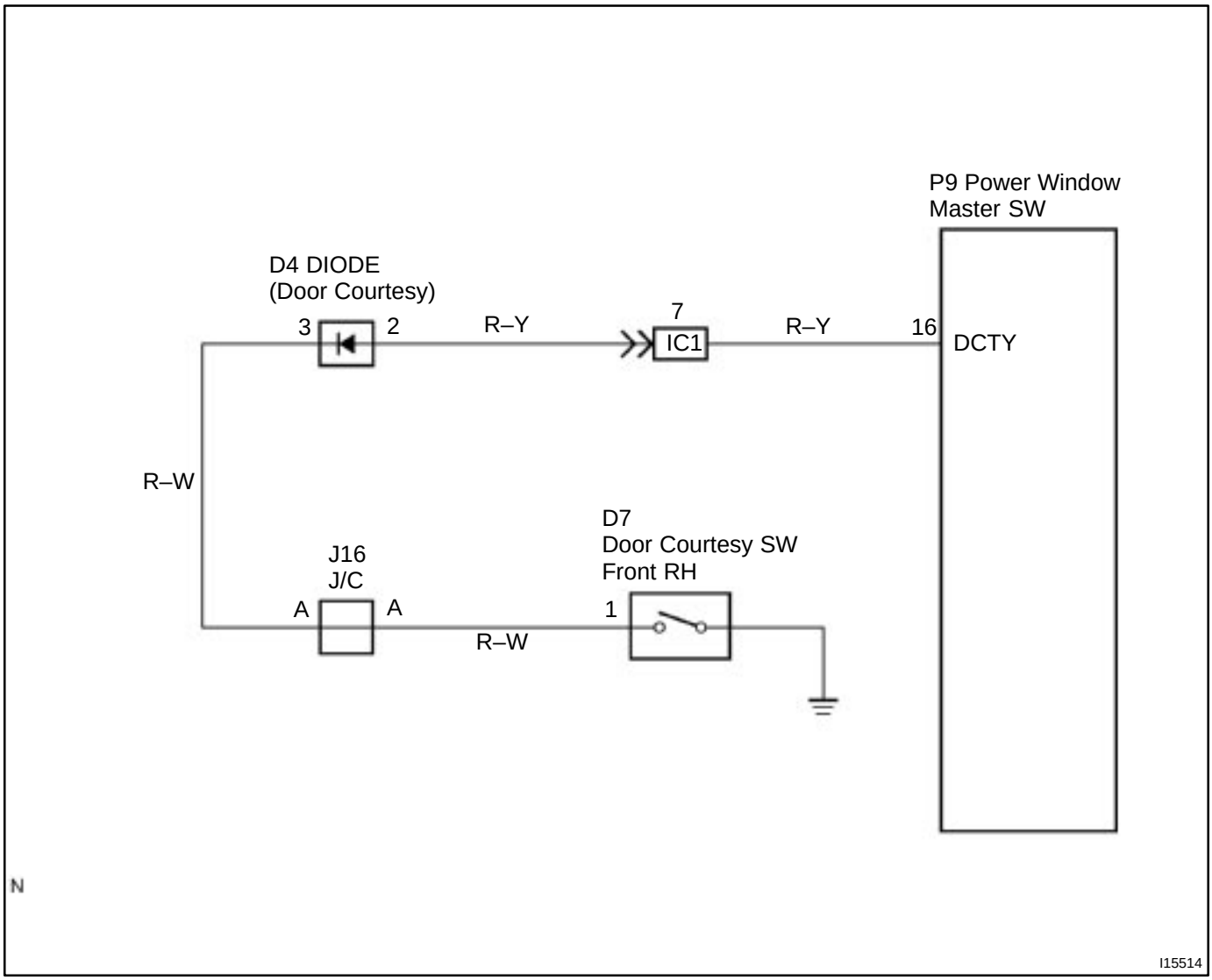

INSPECTION PROCEDURE

1	**Check operation of door courtesy light.**

CHECK:
Check that door courtesy light comes on when door opened, and goes off when door is closed.
OK:
Must be operated normally.

OK → **Proceed to next circuit inspection shown on problem symptom table (See page DI–734).**

NG

2	**Check courtesy light (See page BE–27).**

NG → **Replace the courtesy light.**

OK

3	**Check courtesy switch (See page BE–27).**

NG → **Replace the courtesy switch.**

OK

4	**Check wireharness and connector between courtesy light and driver door ECU, courtesy switch and driver door ECU.**

NG → **Repair or replace wireharness or connector.**

OK

Proceed to next circuit inspection shown on problem symptoms table (See page DI–734).

DI2BS–10

Power window motor circuit

WIRING DIAGRAM

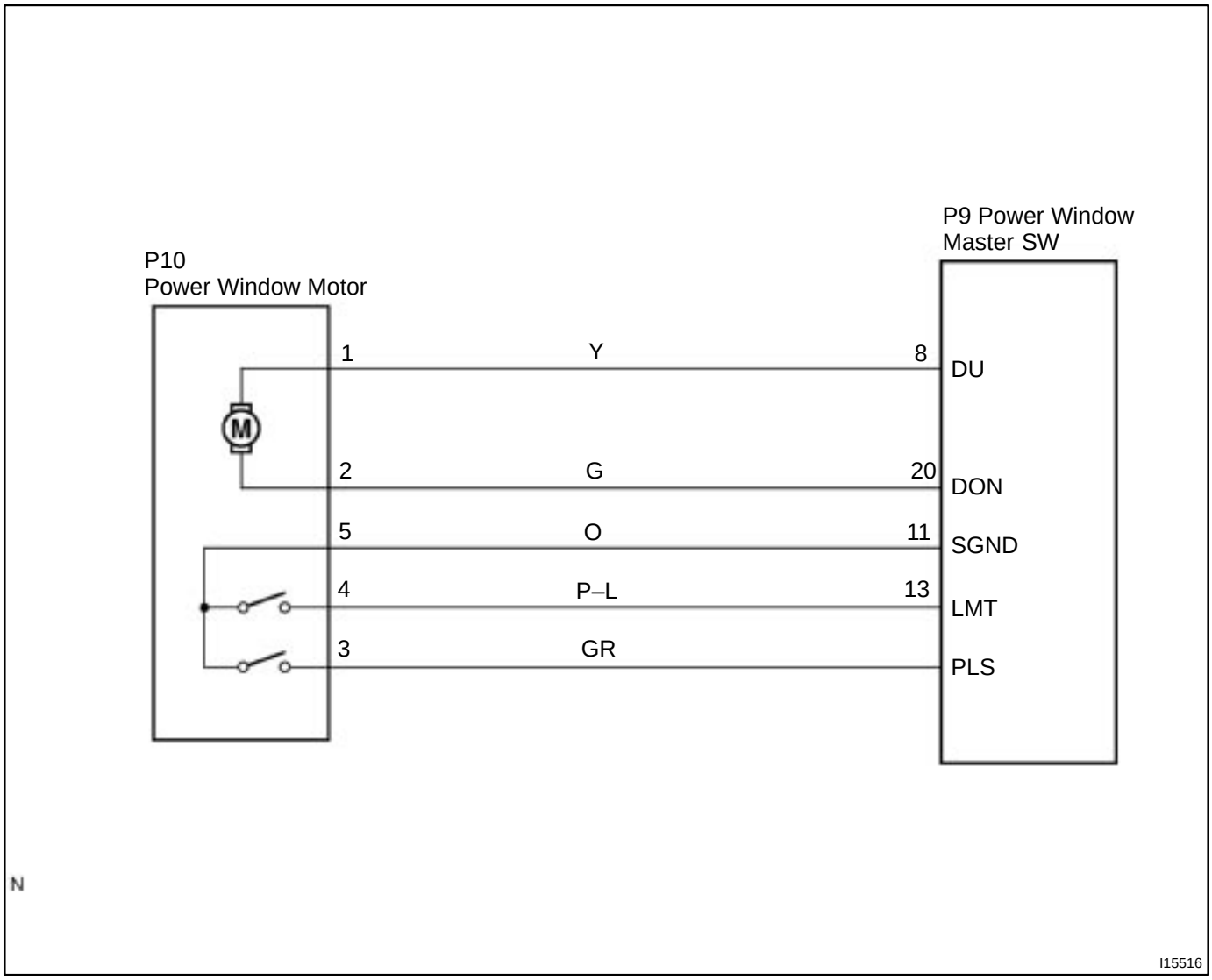

INSPECTION PROCEDURE

1	Check power window motor (See page BE–56).

NG → Replace the power window motor.

OK

2	Check wireharness and connector between power window motor and driver door ECU.

NG → Repair or replace wireharness or connector.

OK

Proceed to next circuit inspection shown on problem symptoms table (See page DI–734).

DI2BT–09

Jam protection limit switch circuit

CIRCUIT DESCRIPTION

Jam protection limit switch is built–in the power window motor. This switch functions to turn ”OFF” before the top dead center, and ECU reads this ”OFF” signal resulting in closing the window fully.

WIRING DIAGRAM

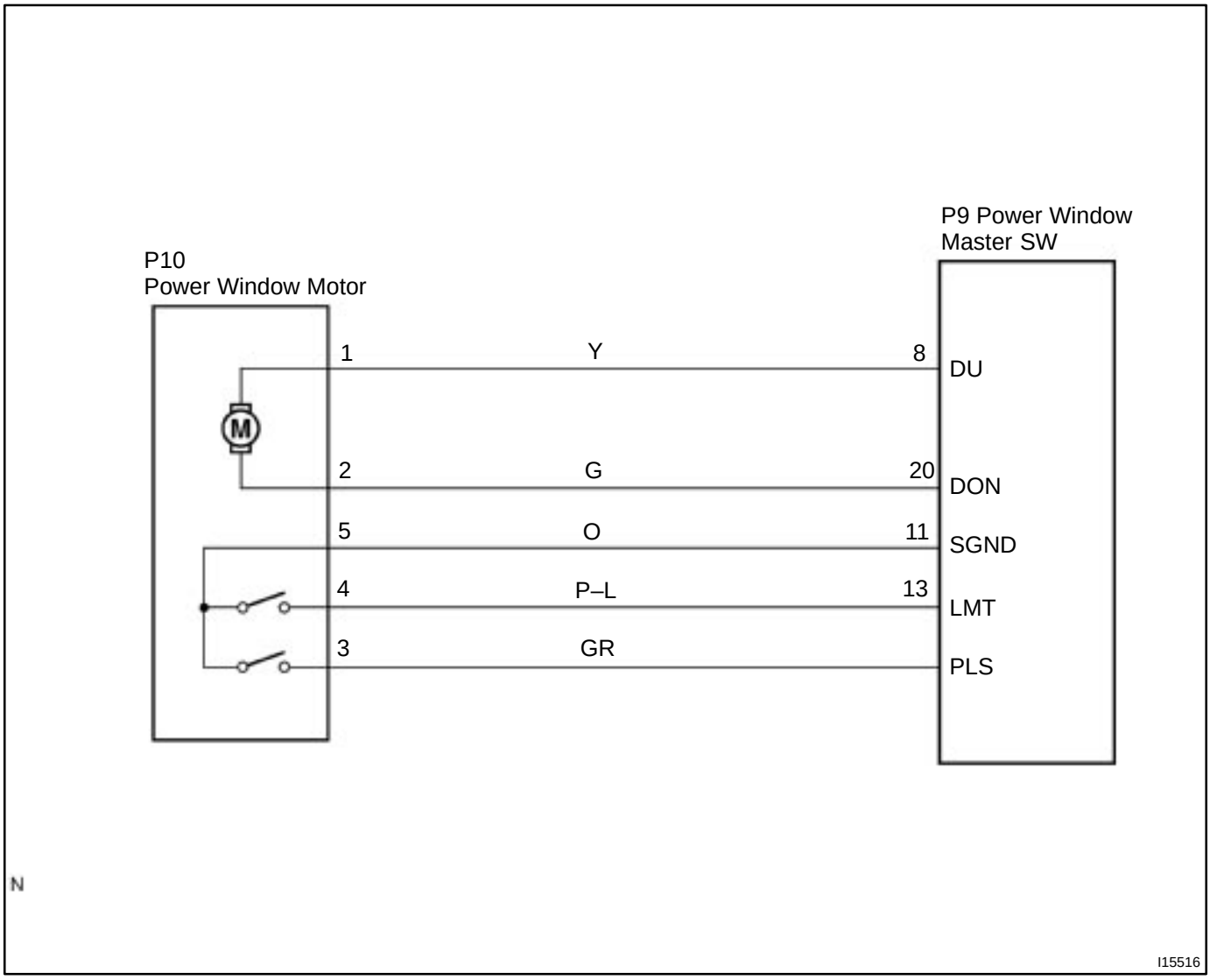

INSPECTION PROCEDURE

1	Check jam protection limit switch (See page BE–56).

NG → Replace the power window motor.

OK

2	Check wireharness and connector between jam protection limit switch and driver door ECU.

NG → Repair or replace wireharness or connector.

OK

Proceed to next circuit inspection shown on problem symptoms table (See page DI–734).

DI2BU–09

Jam protection pulse switch circuit

CIRCUIT DESCRIPTION

Jam protection pulse switch is built–in the power window motor. Pulse switch outputs ON/OFF pulse when the motor rotates.

WIRING DIAGRAM

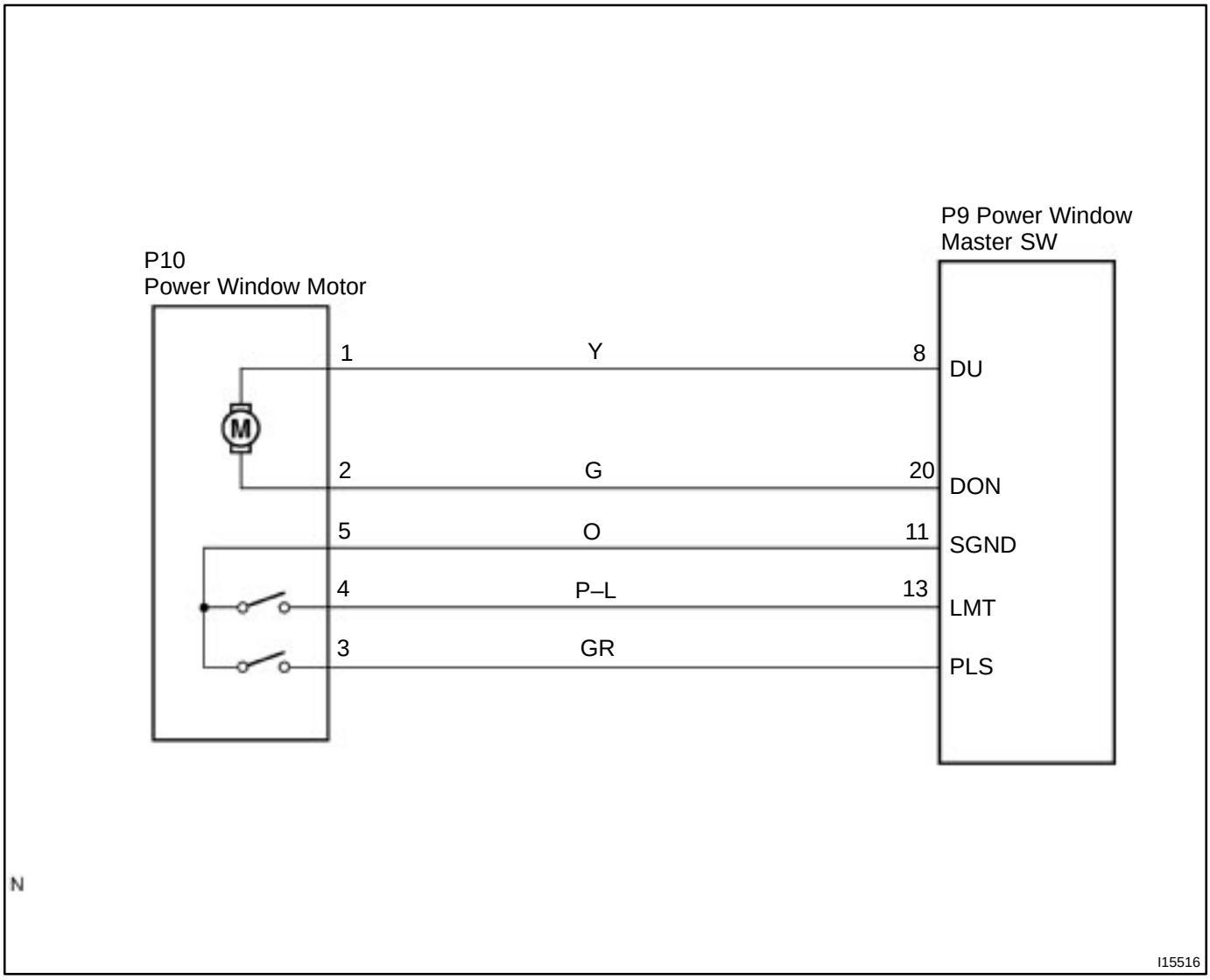

INSPECTION PROCEDURE

1	Check jam protection pulse switch (See page BE–56).

NG → Replace the power window motor.

OK

2	Check wireharness and connector between jam protection pulse switch and driver door ECU.

NG → Repair or replace wireharness or connector.

OK

Proceed to next circuit inspection shown on problem symptoms table (See page DI–734).

DI1SF–03

PRE–CHECK

1. DIAGNOSIS SYSTEM

(a) As shown in the following illustration, each ECU of this vehicle is connected by communication bus and it transmits each signal by communication. This communication bus is self–diagnosed by Body ECU and it memorizes DTC when it detects communication stop to ECU or communication bus +B short or GND short. There is a possibility that Body ECU cannot self–diagnose accurately unless it doesn't work normal. So, please note that the troubleshooting of Body Electrical System should be done after confirming if Body ECU and Open door indicator works normal by 2. "BASIC INSPECTION" described later.

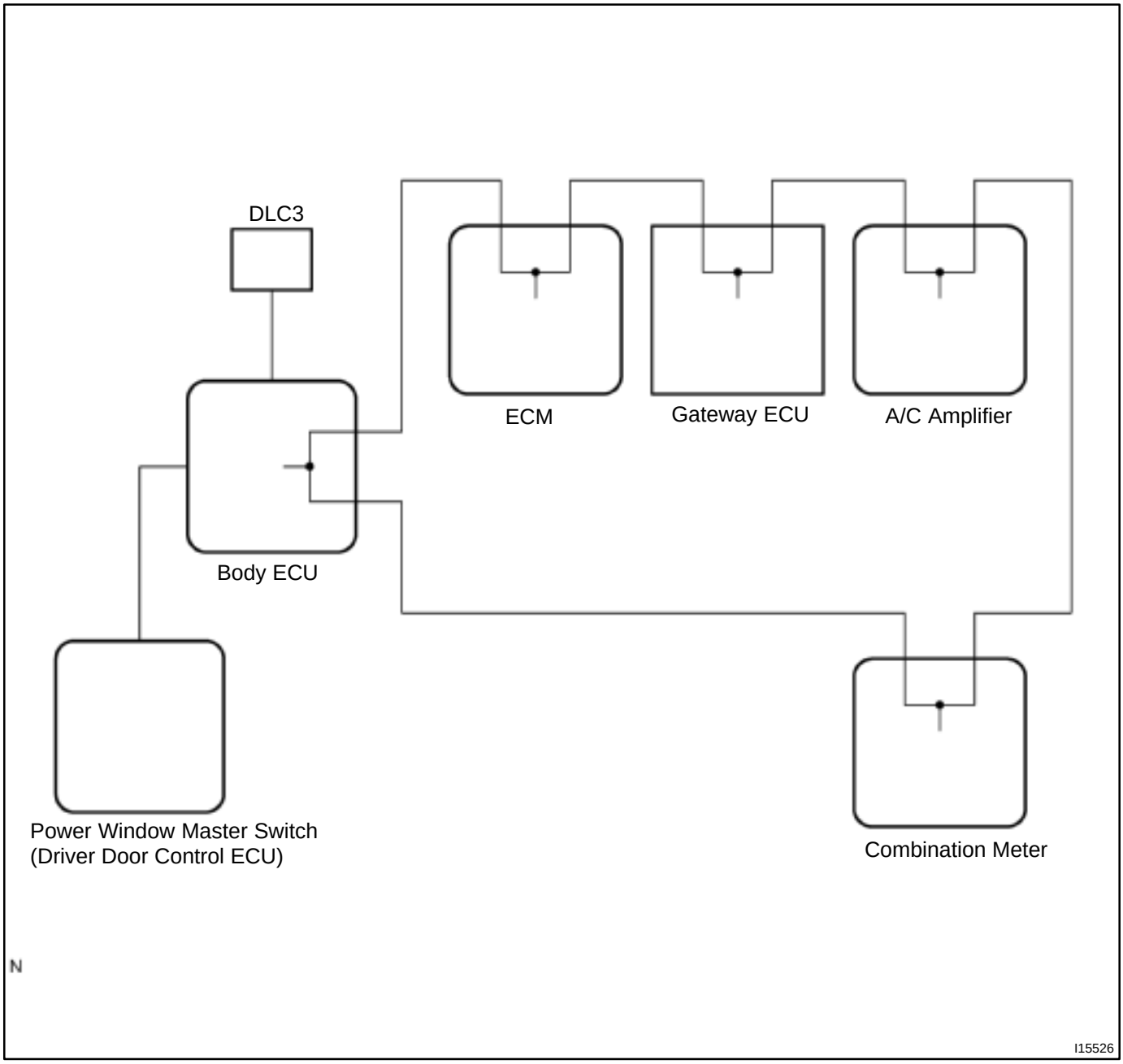

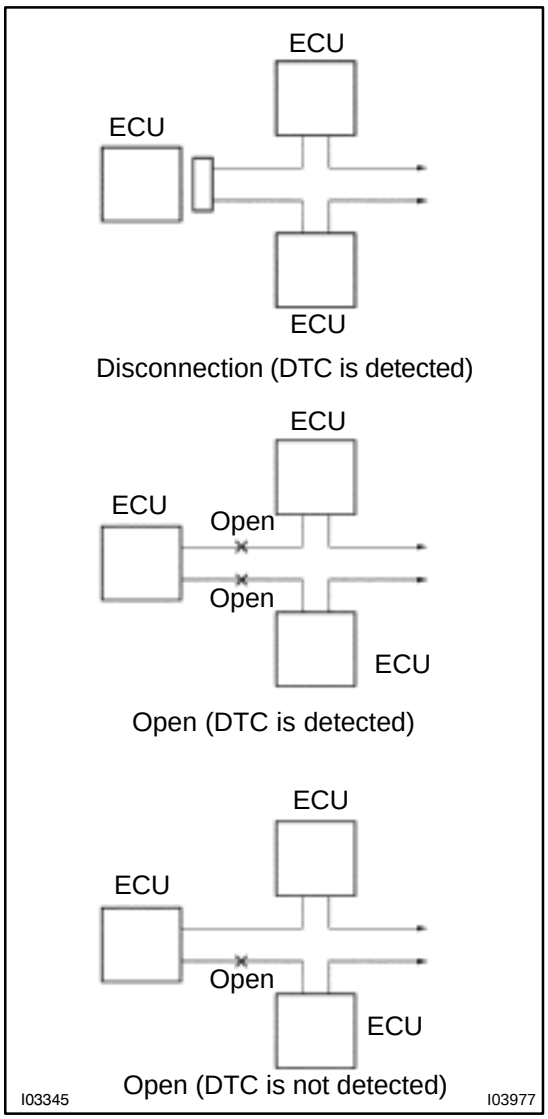

(b) If DTC of ECU communication stop is output, there is a possibility of connector disconnection or 2 communication buses open. It will not become abnormal with only 1 communication bus open.

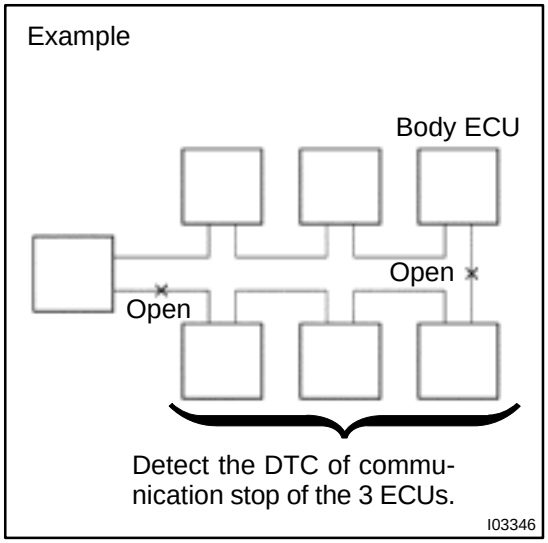

(c) If 2 communication buses are open at the position as shown in the illustration, DTC of ECU communication stop between those 2 buses is output.

2. BASIC INSPECTION

INSPECT BODY ECU	
1	**Check room light operation.**

HINT:
With this inspection body ECU CPU can be diagnosed if it works normal or not.

CHECK:
Check if the room light works normal at DOOR position.

OK → **Go to next step”OPEN DOOR INDICATOR LIGHT INSPECTION”.**

NG

2	**Check interior light system (Except body ECU) (See page BE–27).**

OK → **Replace the body ECU.**

NG

Repair of replace malfunction part.

INSPECT OPEN DOOR INDICATOR LIGHT

1	**Check open door indicator light.**

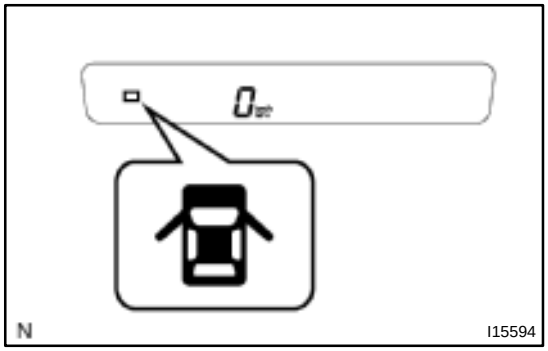

CHECK:
Check if open door Indicator light is turned on when either door open.
HINT:
If open door Indicator light is not turned on, DTC will not be output.

OK → **Go to step 3. ”DTC CHECK”.**

NG

Repair the open door indicator light (See page BE–39).

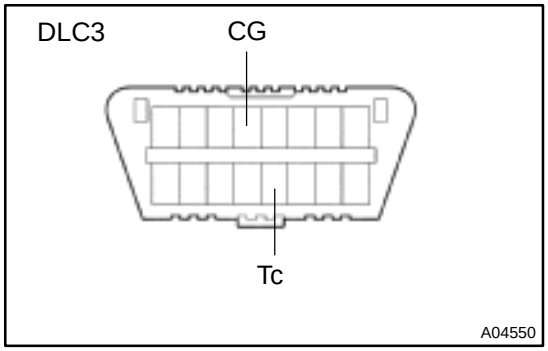

3. DTC CHECK (Using diagnosis check wire)

(a) Using SST, connect terminals Tc and CG of DLC3.
SST 09843–18020

(b) Turn the ignition switch ON.

(c) Read the DTC on the open door indicator light.

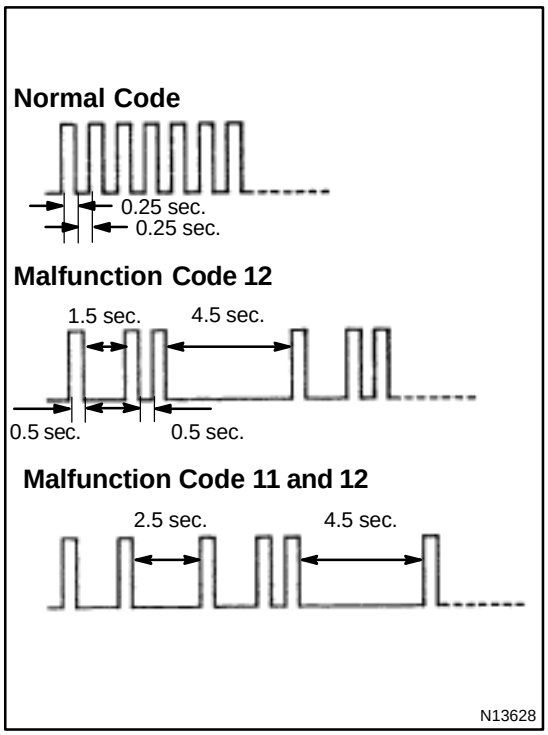

As an example, the blinking patterns for codes; normal, 12, and 11 and 12 are shown in the illustration.

(d) Check for the problem using the DTC table on the next page.

(e) After completing the check, turn the ignition switch off, and disconnect terminals Tc and E1.

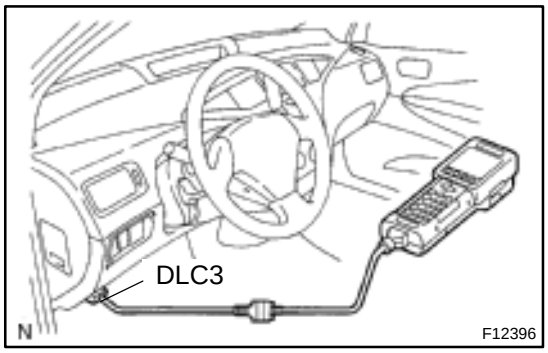

4. DTC CHECK (Using hand–held tester)

(a) Prepare the hand–held tester.

(b) Connect the hand–held tester to DLC3.

(c) Turn the ignition switch ON and switch the hand–held tester main switch ON.

(d) Use the hand–held tester to check the DTCs, note them down. (For opening instructions, see the hand–held tester's instruction book.)

(e) See page DI–757 to confirm the details of the DTCs.

5. DTC CLEARANCE

DTC will be cleared when the trouble output to DTC is recovered normally.

DI7O1–01

TERMINALS OF ECU

BODY ECU

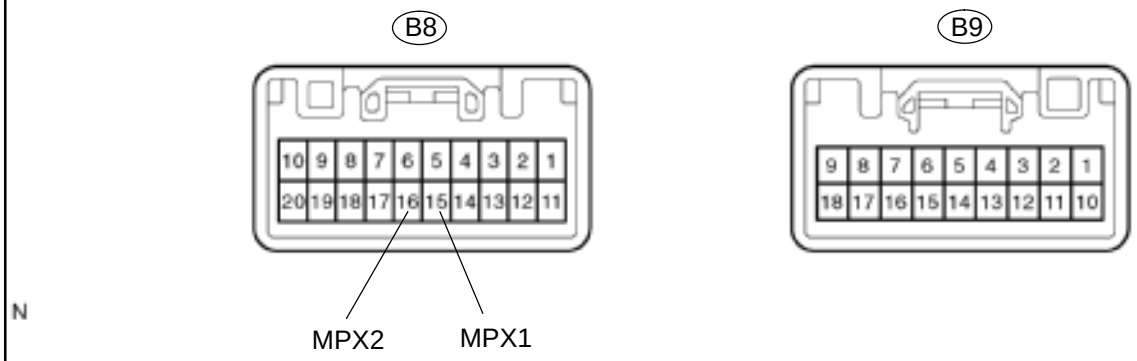

DRIVER DOOR ECU

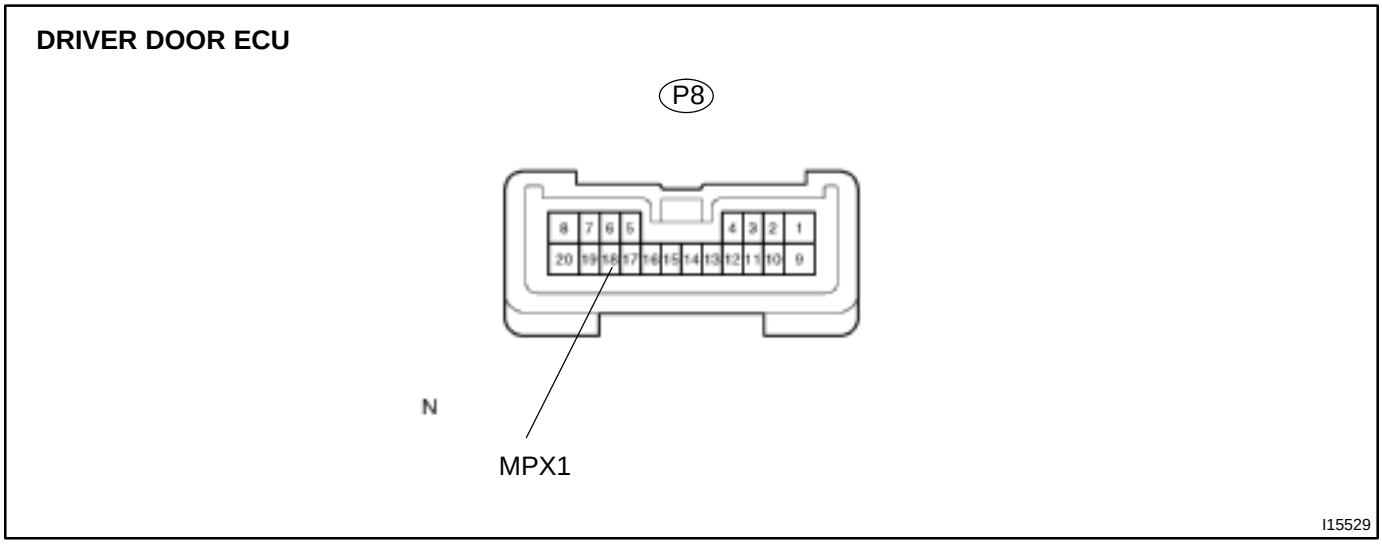

ECM

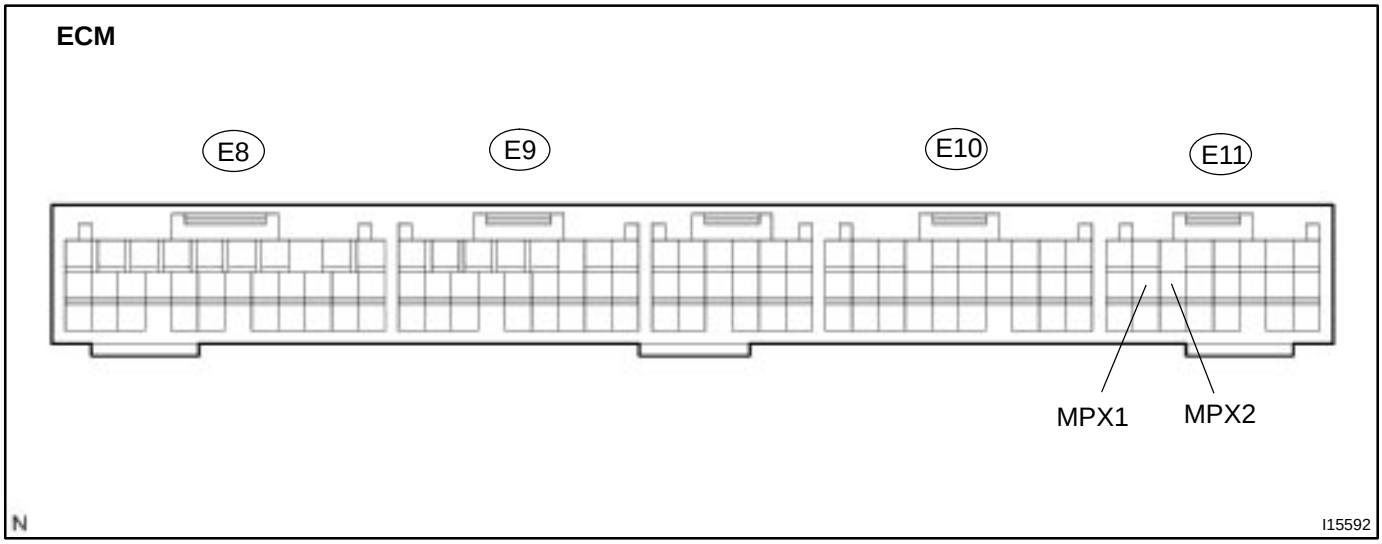

A/C amplifier

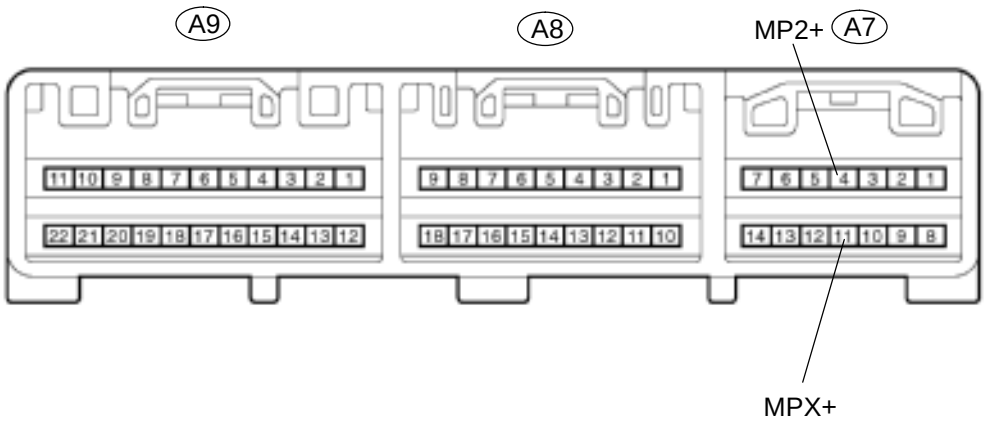

Combination Meter ECU

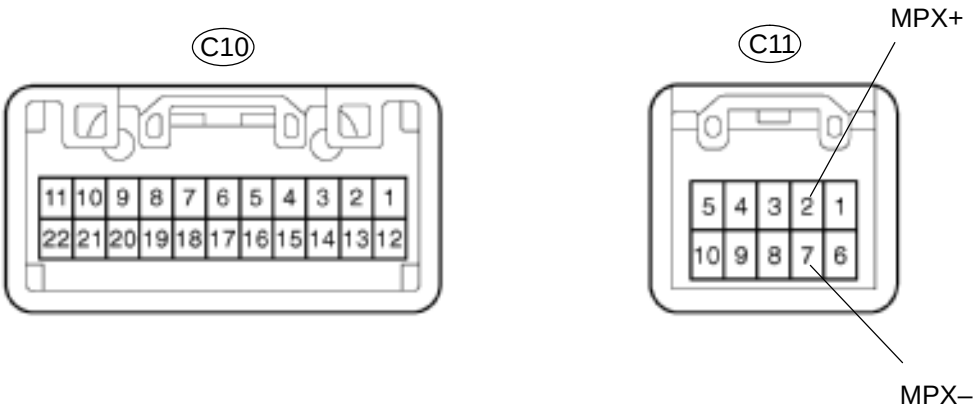

Multi Display

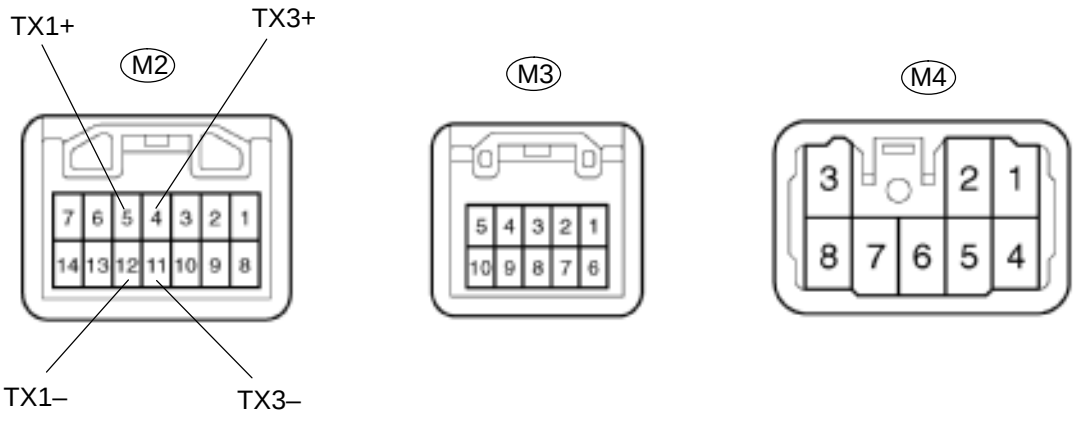

Gateway ECU

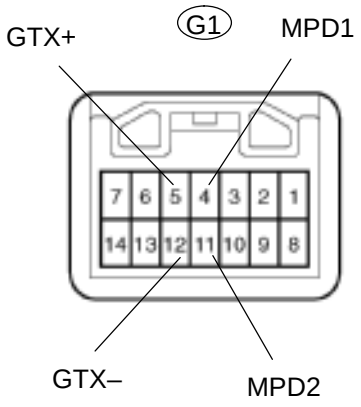

Symbols (Terminals No.)	Wiring Color	Condition	STD Value (V)
IG ↔ GND (2 ↔ 14)	B–Y ↔ W–B	Ignition switch OFF or ACC	Below 1 V
		Ignition switch ON	10 – 14 V
MDP1 (4)	GR–B	A/C ECU communication circuit	–
GTX+ (5)	R	AVC–LAN communication circuit	–
CG ↔ Body ground (7 ↔ Body ground)	W–B ↔ Body ground	Constant	Below 1 V
BATT ↔ GND (8 ↔ 14)	R–G ↔ W–B	Constant	10 – 14 V
ACC ↔ GND (9 ↔ 14)	GR–R ↔ W–B	Ignition switch OFF	Below 1 V
		Ignition switch ACC or ON	10 – 14 V
MDP2 (11)	GR–L	Engine and ECT ECU communication circuit	–
GTX– (12)	G	AVC–LAN communication circuit	–
GND ↔ Body ground (14 ↔ Body ground)	W–B ↔ Body ground	Constant	Below 1 V

DI1SJ–03

CIRCUIT INSPECTION

DTC	B1211 / 11	Driver door ECU communication stop

CIRCUIT DESCRIPTION

This DTC is output when communication stops between driver door ECU and body ECU.

DTC No.	DTC Detecting Condition	Trouble Area
B1211/11	No communication from driver door ECU more than 10 seconds.	• Driver door ECU • Wireharness

WIRING DIAGRAM

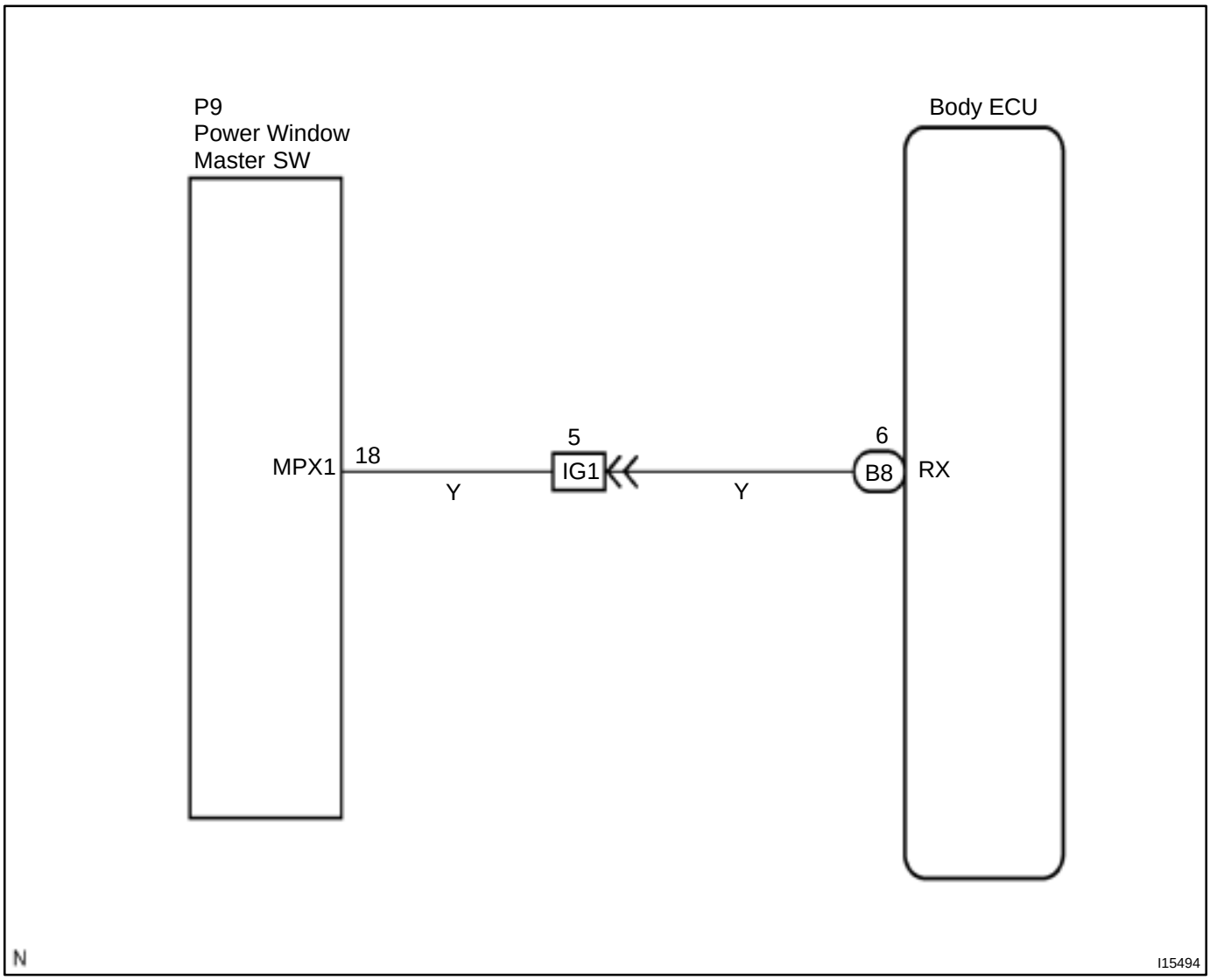

INSPECTION PROCEDURE

1	**Check driver door ECU.**

CHECK:

Check if the driver door window glass auto up.

HINT:

With this inspection, the driver door ECU CPU can be diagnosed if it works normally or not.

NG → **Replace the driver door ECU.**

OK

2	Check wireharness.

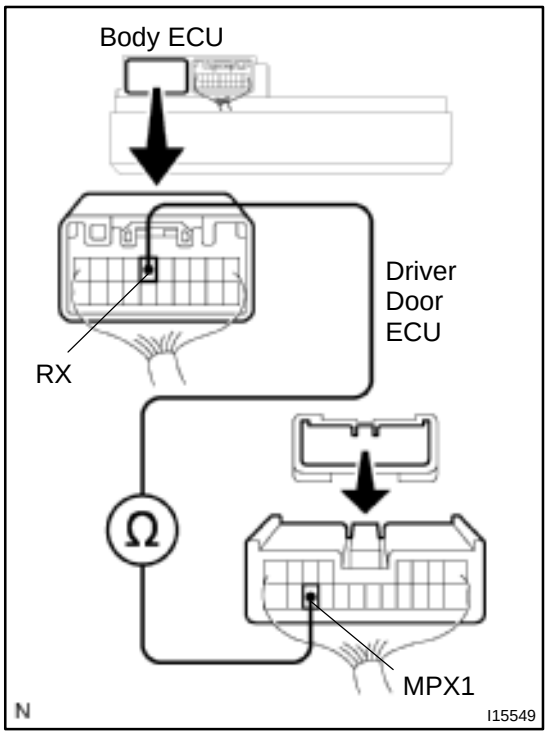

PREPARATION:
Disconnect connector ”B8” of body ECU and ”P9” of driver door ECU.
CHECK:
Check continuity between terminal RX of body ECU and MPX1 of driver door ECU.
OK:
There is a continuity in wireharness.
HINT:
If there is OPEN in wireharness, please repair it.

NG → **Repair or replace wireharness.**

OK →

Replace the driver door ECU.

DI1SS–05

DTC	B1242 / 42	Wireless door lock tuner circuit malfunction

CIRCUIT DESCRIPTION

This DTC is output when GND short of RDA terminal is detected.

DTC No.	DTC Detecting Condition	Trouble Area
B1242/42	GND short of RDA terminal	• Wireharness • Wireless door lock tuner • Body ECU

WIRING DIAGRAM

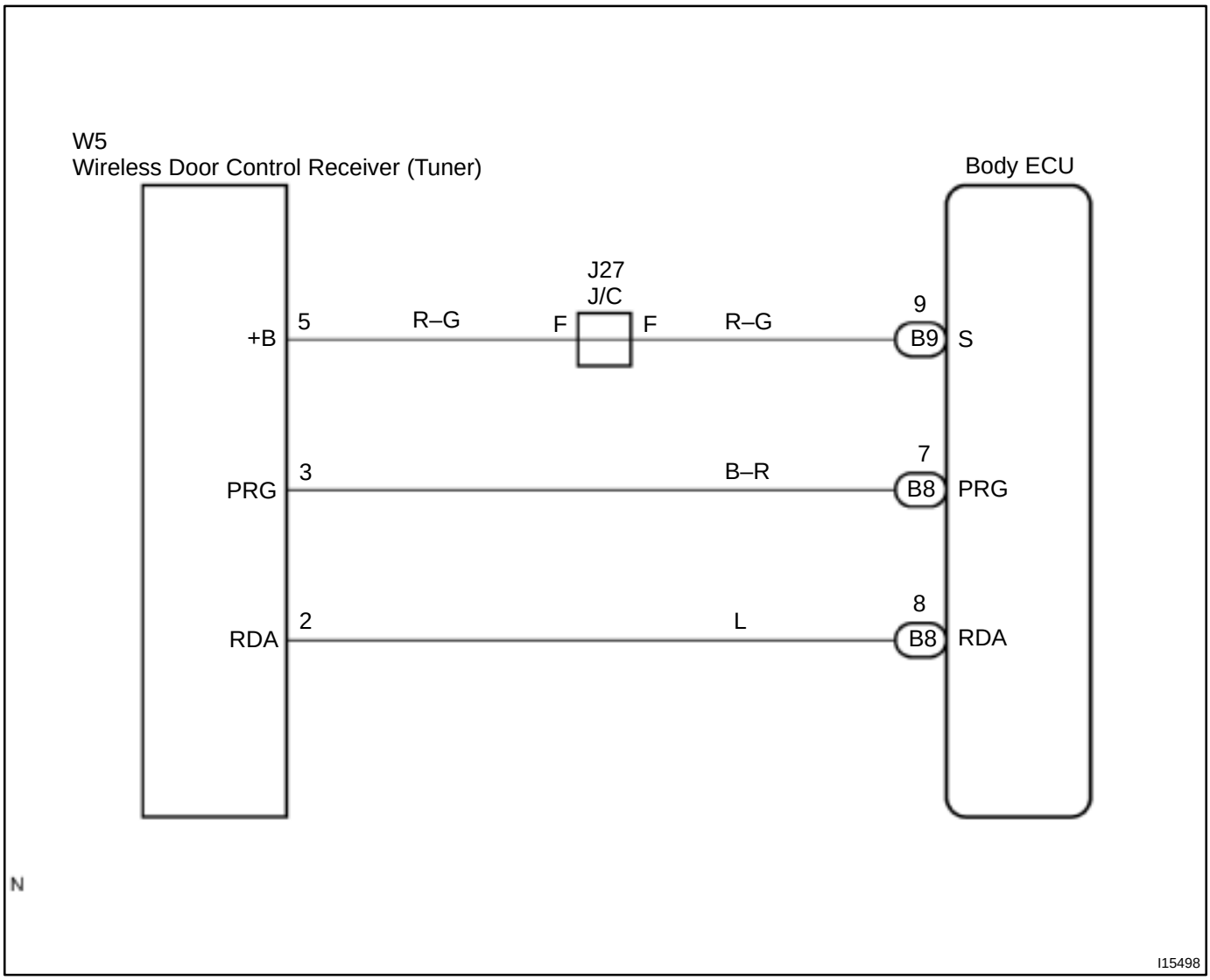

INSPECTION PROCEDURE

1	Check wireharness.

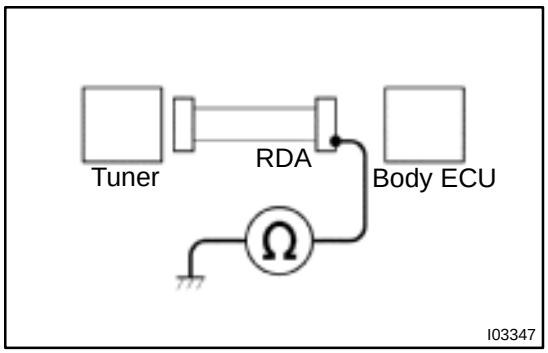

PREPARATION:
Disconnect the connector of tuner and body ECU.
CHECK:
Check the continuity between wireharness and body ground.
OK:
No continuity.

NG → **Repair or replace the wireharness.**

OK ↓

2	Check body ECU.

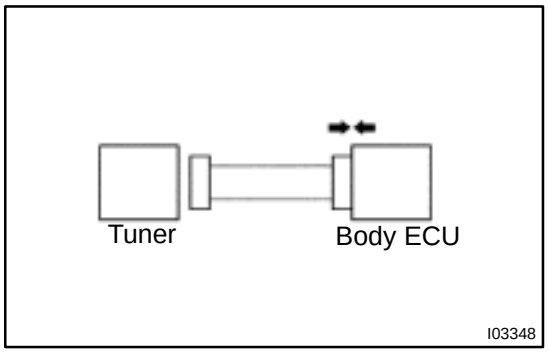

PREPARATION:
Connect the connector of body ECU.
CHECK:
Check the DTC.
OK:
B1242/42 is not output.

NG → **Replace the body ECU.**

OK ↓

Replace the tuner.

DI7O2–01

DTC	B1248/48	AVC–LAN circuit communication stop

CIRCUIT DESCRIPTION

This DTC is output when communication stops between gateway ECU and AVC–LAN circuit.
The body ECU performs the diagnosis check of the gateway ECU communication error to ”AVC–LAN”.
The condition of registration can be checked by DTC of the body ECU.

DTC No.	DTC Detecting Condition	Trouble Area
B1248/48	Condition that the gateway ECU cannot register to AVC–LAN.	• Gateway ECU • Wireharness

WIRING DIAGRAM

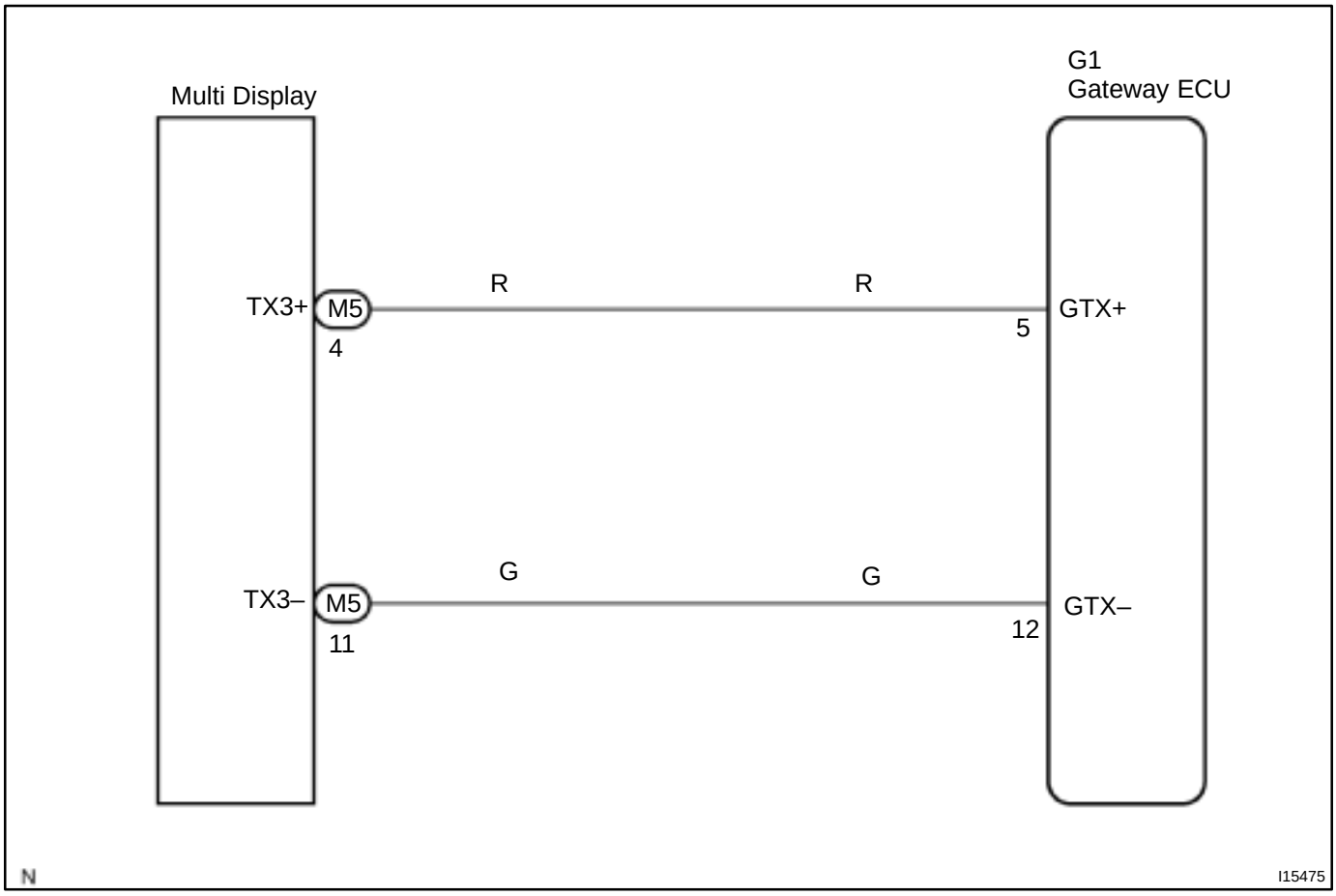

INSPECTION PROCEDURE

1	**Check ”Service check mode” of audio sysytem. (AVC–LAN diagnosis check) (See page DI–791)**

CHECK:
Connection of the gateway ECU can be checked by AVC–LAN diagnosis. (”Service check mode” of audio sysytem)
OK:
Display
G/W: OK (Sysytem is normal)
G/W: NG (Communication error)
G/W: None (Never registered)

NG → **Replace the gateway ECU.**

OK

2	**Check wireharness**

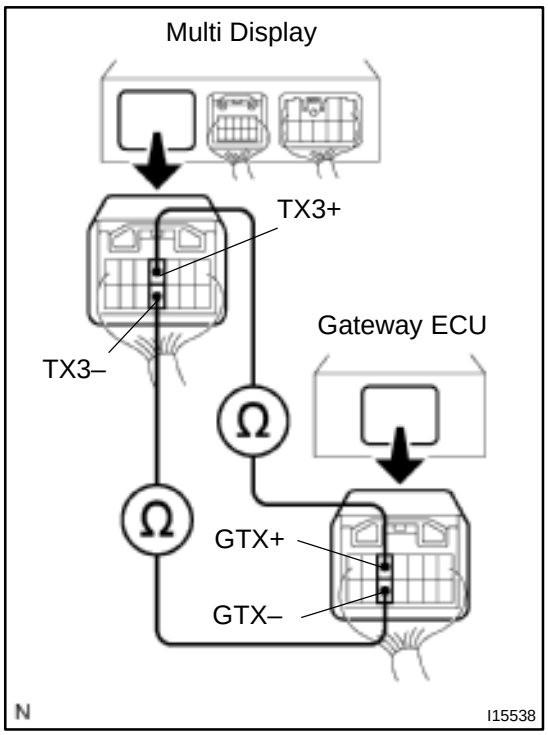

PREPARATION:
Disconnect connector ”G1” of gateway ECU and ”M2” of multi display.
CHECK:
(a) Check continuity between terminals GTX+ of gateway ECU and TX3+ of multi display.
(b) Check continuity between terminals GTX– of gateway ECU and TX3– of multi display.
OK:
There is a continuity in wireharness of both (a) and (b), or either (a) or (b).
HINT:
If there is OPEN in wireharness of either (a) or (b), please repair it.

NG → **Repair or replace wireharness.**

OK

Replace the gateway ECU.

DI1SV–05

DTC	B1261 / 61	ECM communication stop

CIRCUIT DESCRIPTION

This DTC is output when communication stops between ECM and body ECU.

DTC No.	DTC Detecting Condition	Trouble Area
B1261/61	No communication from ECM more than 10 seconds.	• ECM • Wireharness

WIRING DIAGRAM

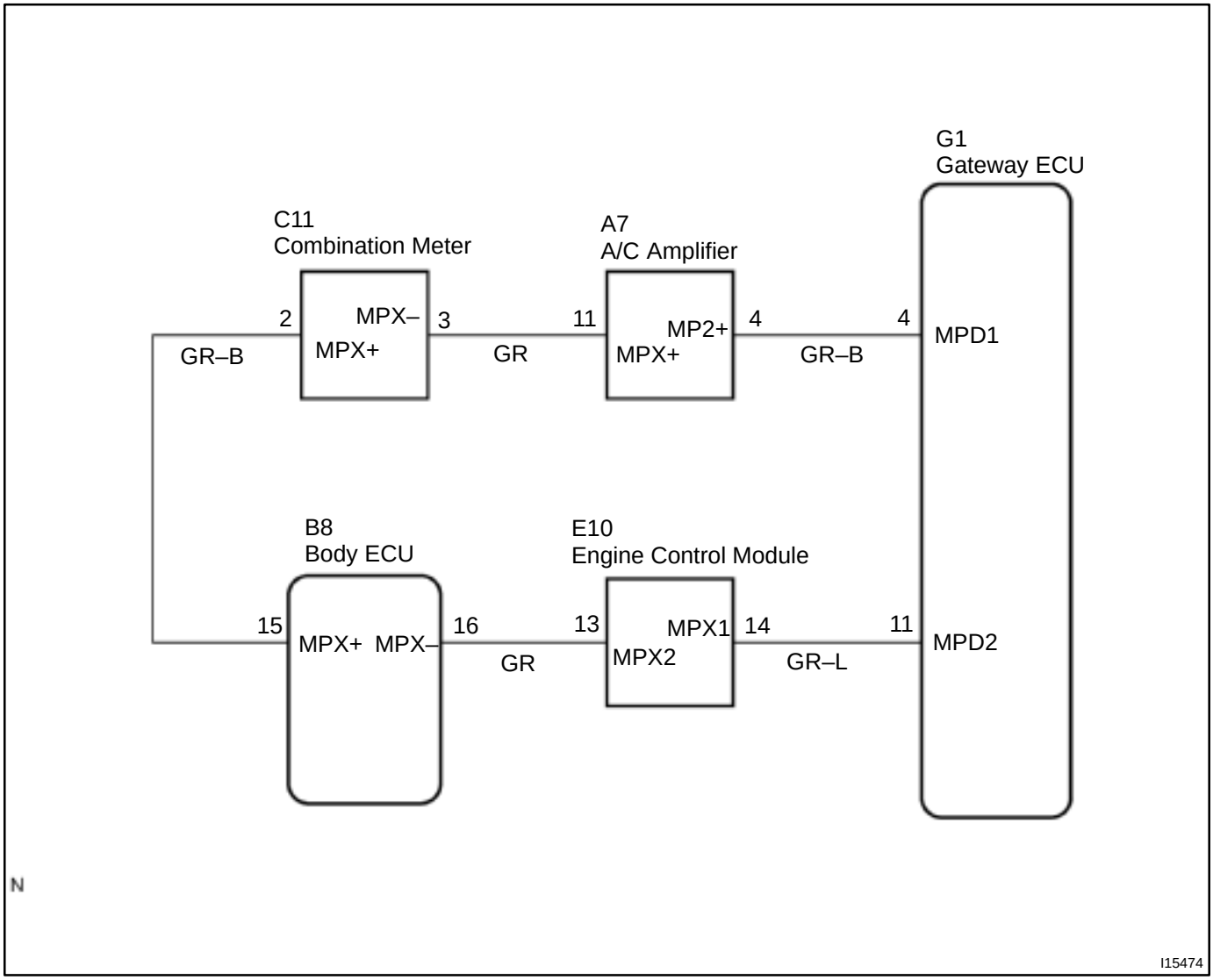

INSPECTION PROCEDURE

1	**Check ECM.**

CHECK:

Check that the engine starts normally.

HINT:

With this inspection, ECM CPU can be diagnosed if it works normally or not.

NG → **Replace the ECM.**

OK

2	Check wireharness

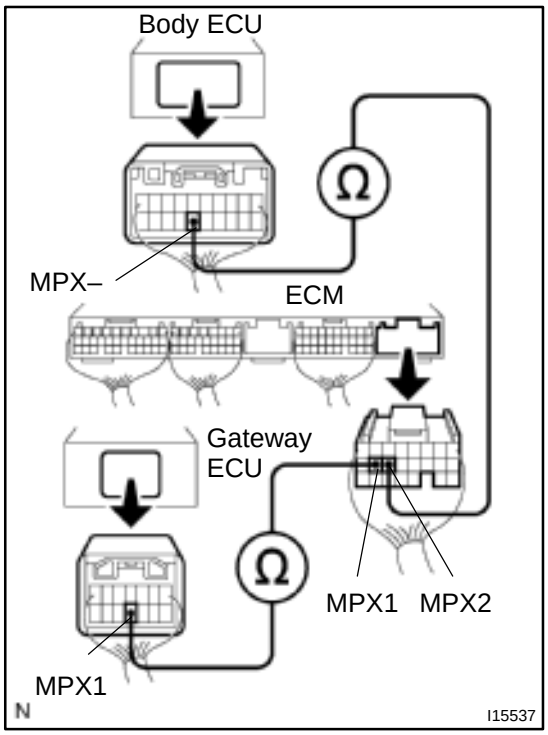

PREPARATION:

Disconnect connector ”B8” of body ECU, ”E11” of ECM and ”G1” of gateway ECU.

CHECK:

(a) Check continuity between terminals MPX– of body ECU and MPX2 of ECM.

(b) Check continuity between terminals MPX1 of ECM and MPX1 of gateway ECU.

OK:

There is a continuity in wireharness of both (1) and (2), or either (1) or (2).

HINT:

If there is OPEN in wireharness of either (1) or (2), please repair it.

NG → **Repair or replace wireharness.**

OK →

Replace the ECM.

DTC	B1266 / 66	Instrument panel system communication bus malfunction (+B short)

DTC	B1267 / 67	Instrument panel system communication bus malfunction (GND short)

CIRCUIT DESCRIPTION

This DTC is output when +B or GND short occurs on instrument panel system communication bus. If +B or GND short is detected on instrument panel system communication bus, separate it by bus cut relay in body ECU to prevent while communication buses' failure.

WIRING DIAGRAM

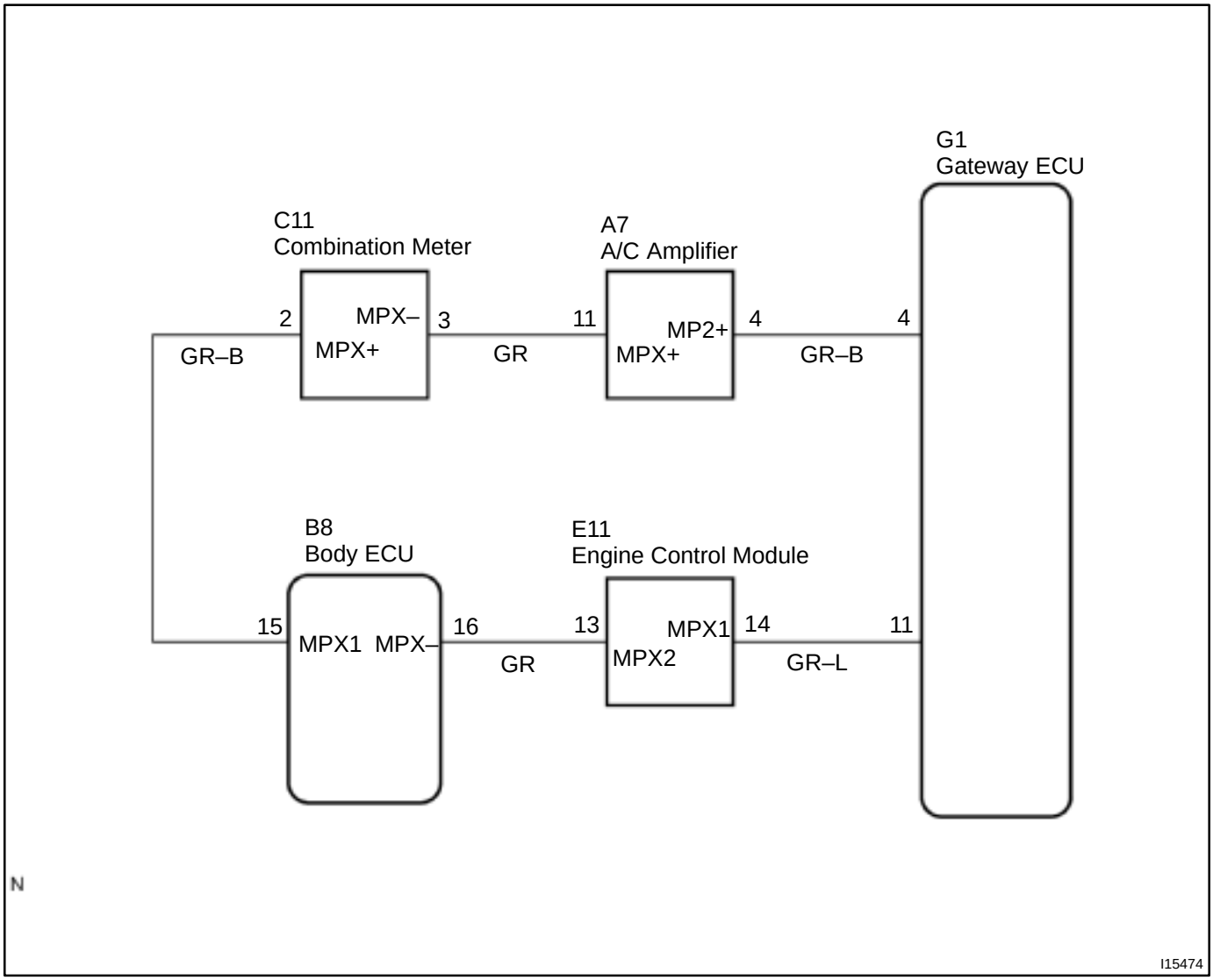

INSPECTION PROCEDURE

HINT:

On the system structure point of view, this DTC cannot display meter. In case of checking DTC, please use hand–held tester.

1	**Check the communication circuit inside ECM.**

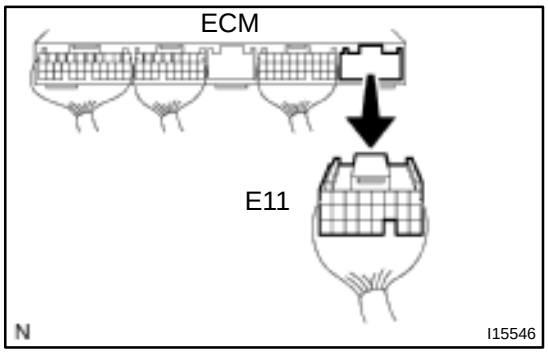

PREPARATION:

Disconnect the connector ”E11” of ECM.

CHECK:

Check the DTC.

OK:

Code B1266 or B1267 is not output

OK	**Replace the ECM.**

NG

2	**Check the communication circuit inside gateway ECU.**

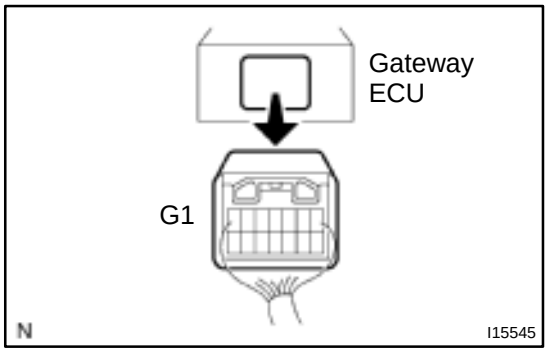

PREPARATION:

(a) Connect the connector ”E11” of ECM.

(b) Disconnect the connector ”G1” of gateway ECU.

CHECK:

Check the DTC.

OK:

Code B1266 or B1267 is not output

OK	**Replace the gateway ECU.**

NG

3	Check the communication circuit inside A/C amplifier.

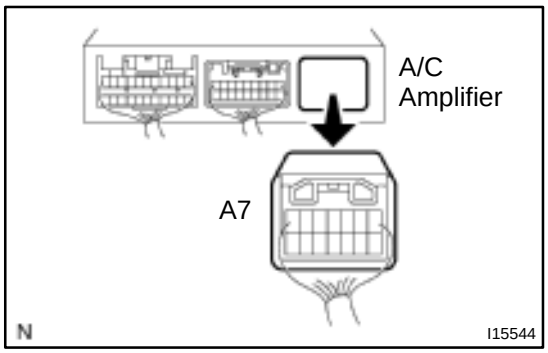

PREPARATION:
(a) Connect the connector ”G1” of gateway ECU.
(b) Disconnect the connector ”A7” of A/C amplifier.

CHECK:
Check the DTC.

OK:
Code B1266 or B1267 is not output

OK	Replace the A/C amplifier.

NG

4	Check the communication circuit inside combination meter ECU.

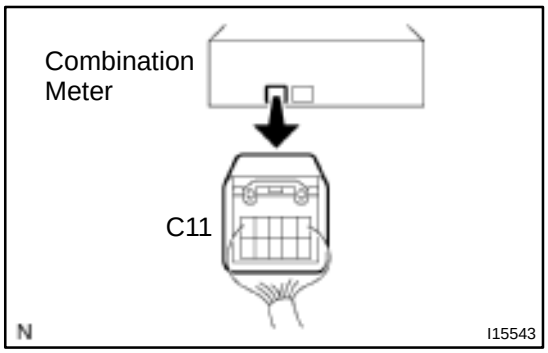

PREPARATION:
(a) Connect the connector ”A7” of A/C amplifier.
(b) Disconnect the connector ”C11” of combination meter ECU.

CHECK:
Check the DTC.

OK:
Code B1266 or B1267 is not output

OK	Replace the combination meter ECU.

NG

5	Check for short circuit between combination meter ECU and body ECU.

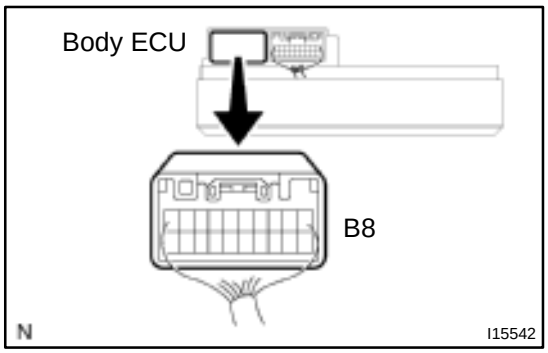

PREPARATION:
Disconnect the connector ”B8” of body ECU.
CHECK:
Check the DTC.
OK:
Code B1266 or B1267 is not output

OK	Repair or replace the wireharness between combination meter ECU and body ECU.

NG

6	Check for short circuit between body ECU and ECM.

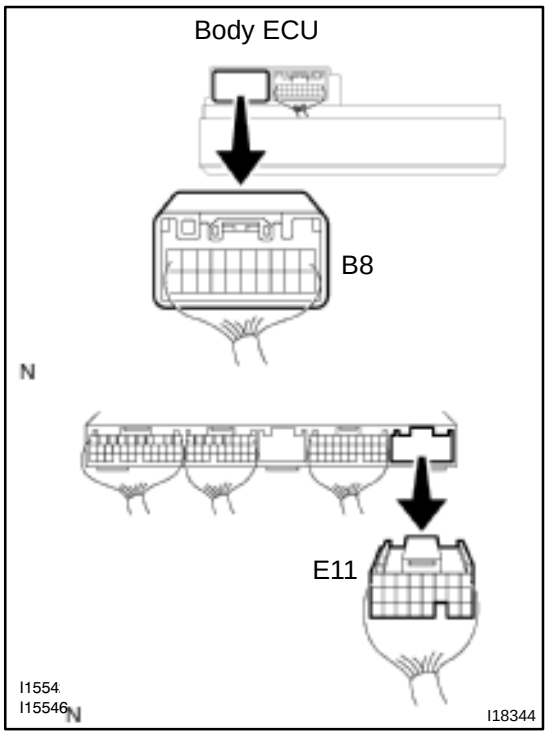

PREPARATION:
Connect the connector ”B8” of body ECU.
Disconnect the connector ”E11” of ECM.
CHECK:
Check the DTC.
OK:
Code B1266 or B1267 is not output

OK	Repair or replace the wireharness between body ECU and ECM.

NG

7	Check for short circuit between ECM and gateway ECU.

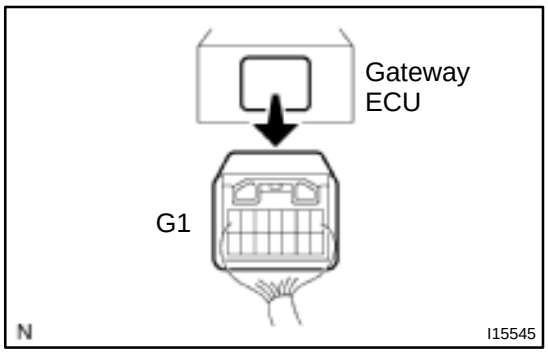

PREPARATION:
Connect the connector ”B8” of body ECU.
Disconnect the connector ”G1” of gateway ECU.
CHECK:
Check the DTC.
OK:
Code B1266 or B1267 is not output

OK	Repair or replace the wireharness between ECM and gateway ECU.

NG

8	Check for short circuit between gateway ECU and A/C amplifier.

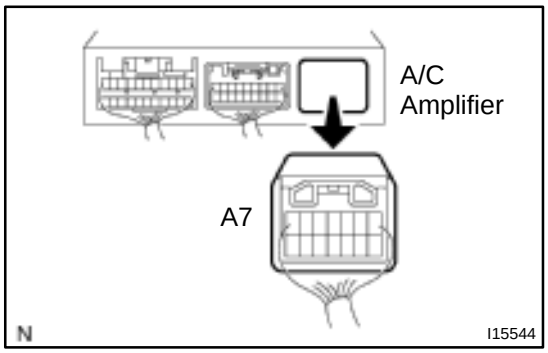

PREPARATION:
Connect the connector ”E11” of ECM.
Disconnect the connector ”A7” of A/C amplifier.
CHECK:
Check the DTC.
OK:
Code B1266 or B1267 is not output

OK	Repair or replace the wireharness between ECM and A/C amplifier.

NG

9	Check for short circuit between A/C amplifier and combination meter ECU.

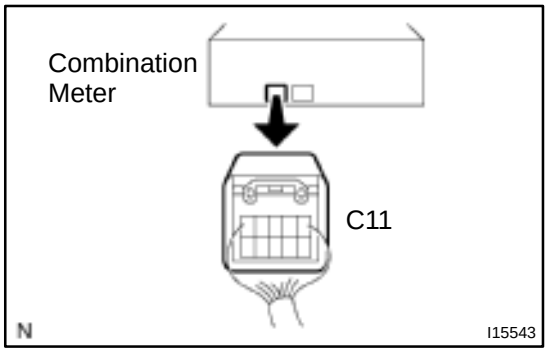

PREPARATION:
Connect the connector ”A7” of A/C amplifier.
Disconnect the connector ”C11” of combination meter ECU.
CHECK:
Check the DTC.
OK:
Code B1266 or B1267 is not output

OK → **Repair or replace the wireharness between A/C amplifier and combination meter ECU.**

NG

Replace the body ECU.

DI1SY–03

DTC	B1271 / 71	Combination meter ECU communication stop

CIRCUIT DESCRIPTION

This DTC is output when communication stops between combination meter ECU and body ECU.

DTC No.	DTC Detecting Condition	Trouble Area
B1271/71	No communication from Combination meter ECU more than 10 seconds.	• Combination meter ECU • Wireharness

WIRING DIAGRAM

See page DI–770

INSPECTION PROCEDURE

1	Check combination meter ECU.

CHECK:

Start the engine and check that the speed meter and tacometer operate normally.

HINT:

With this inspection, the combination meter ECU CPU can be diagnosed if it works normally or not.

NG → Replace the combination meter ECU.

OK

2	Check wireharness

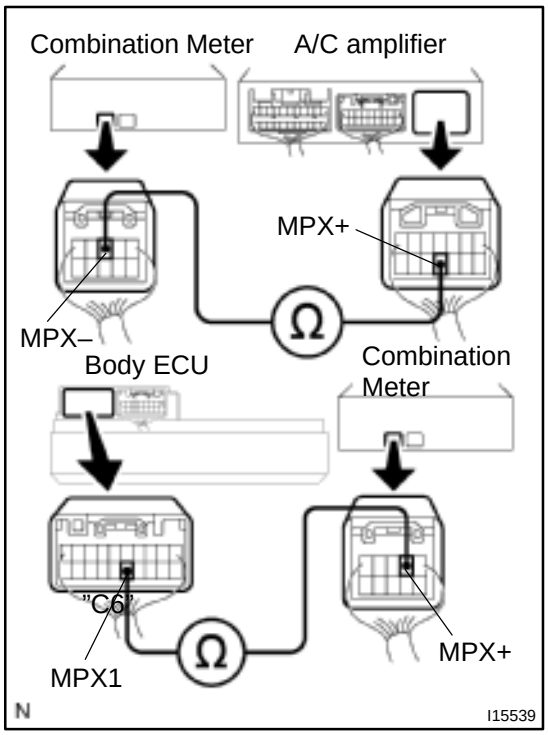

PREPARATION:

Disconnect connector "A7" of A/C amplifier, "C11" of combination meter ECU and "B8" of body ECU.

CHECK:

(a) Check continuity between terminals MPX+ of A/C amplifier and MPX– of combination meter ECU.

(b) Check continuity between terminals MPX+ of combination meter ECU and MPX1 of body ECU.

OK:

There is a continuity in wireharness of both (a) and (b), or either (a) or (b).

HINT:

If there is OPEN in wireharness of either (a) or (b), please repair it.

NG → **Repair or replace wireharness.**

OK

Replace the combination meter ECU.

DI1SY–04

DTC	B1274/74	Multi display communication stop

CIRCUIT DESCRIPTION

This DTC is output when communication stops between multi display and body ECU.

DTC No.	DTC Detecting Condition	Trouble Area
B1274/74	No communication from multi display more than 10 seconds.	• Multi display • Wireharness

WIRING DIAGRAM

See Page DI–770

INSPECTION PROCEDURE

1	**Check multi display ECU.**

CHECK:

Check that the multi display operate normally.

HINT:

With this inspection, the multi display CPU can be diagnosed if it works normally or not.

NG → **Replace the multi display.**

OK

2	**Check wireharness.**

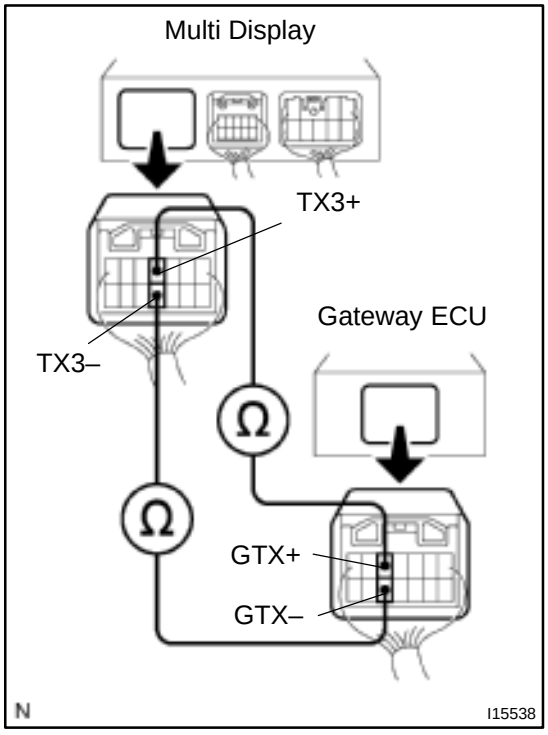

PREPARATION:

Disconnect connector ”M2” of multi display and ”G1” of gateway ECU.

CHECK:

(a) Check continuity between terminals TX3+ of multi display and GTX+ of gateway ECU.

(b) Check continuity between terminals TX3– of multi display and GTX– of gateway ECU.

OK:

There is a continuity in wireharness.

HINT:

If there is OPEN in wireharness, please repair it.

NG → **Repair or replace wireharness.**

OK

Replace the multi display.

DI1SY–05

DTC	B1293/93	Gateway ECU communication stop

CIRCUIT DESCRIPTION

This DTC is output when communication stops between gateway ECU and body ECU.

DTC No.	DTC Detecting Condition	Trouble Area
B1293/93	No communication from gateway ECU more than 10 seconds.	• Gateway ECU • Wireharness

WIRING DIAGRAM

See page DI–770

INSPECTION PROCEDURE

1	Check open door warning light.

CHECK:

Connection that the gateway ECU and BEAN (Body Electrical Area Network) can be checked by DTC transmitted by the body ECU.

See ”INSPECT OPEN DOOR INDICATOR LIGHT on page DI–752.

NG → **Replace the gateway ECU.**

OK

2	Check wireharness

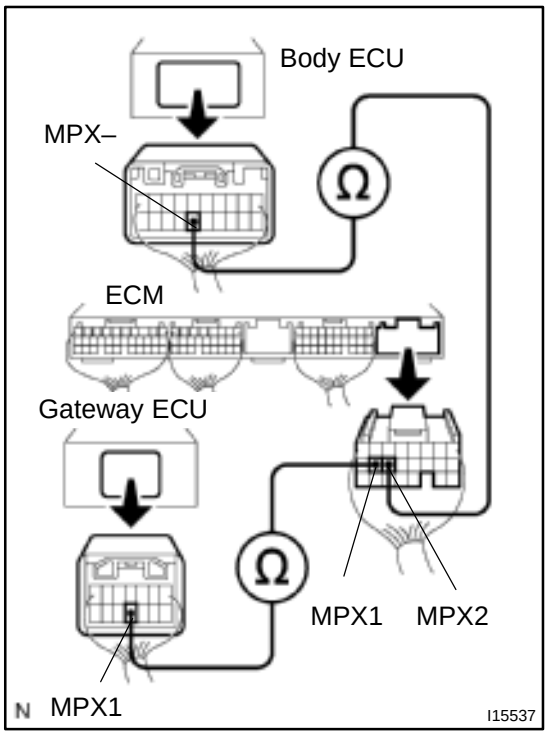

PREPARATION:

Disconnect connector ”B8” of body ECU, ”E11” of ECM and ”G1” of gateway ECU.

CHECK:

(a) Check continuity between terminals MPX– of body ECU and MPX2 of ECM.

(b) Check continuity between terminals MPX1 of ECM and MPX1 of gateway ECU.

OK:

There is a continuity in wireharness of both (a) and (b), or either (a) or (b).

HINT:

If there is OPEN in wireharness of either (a) or (b), please repair it.

NG → **Repair or replace wireharness.**

OK →

Replace the gateway ECU.

DI7O4–01

Power Source Circuit

CIRCUIT DESCRIPTION

This circuit provides power to operate the gateway ECU.

WIRING DIAGRAM

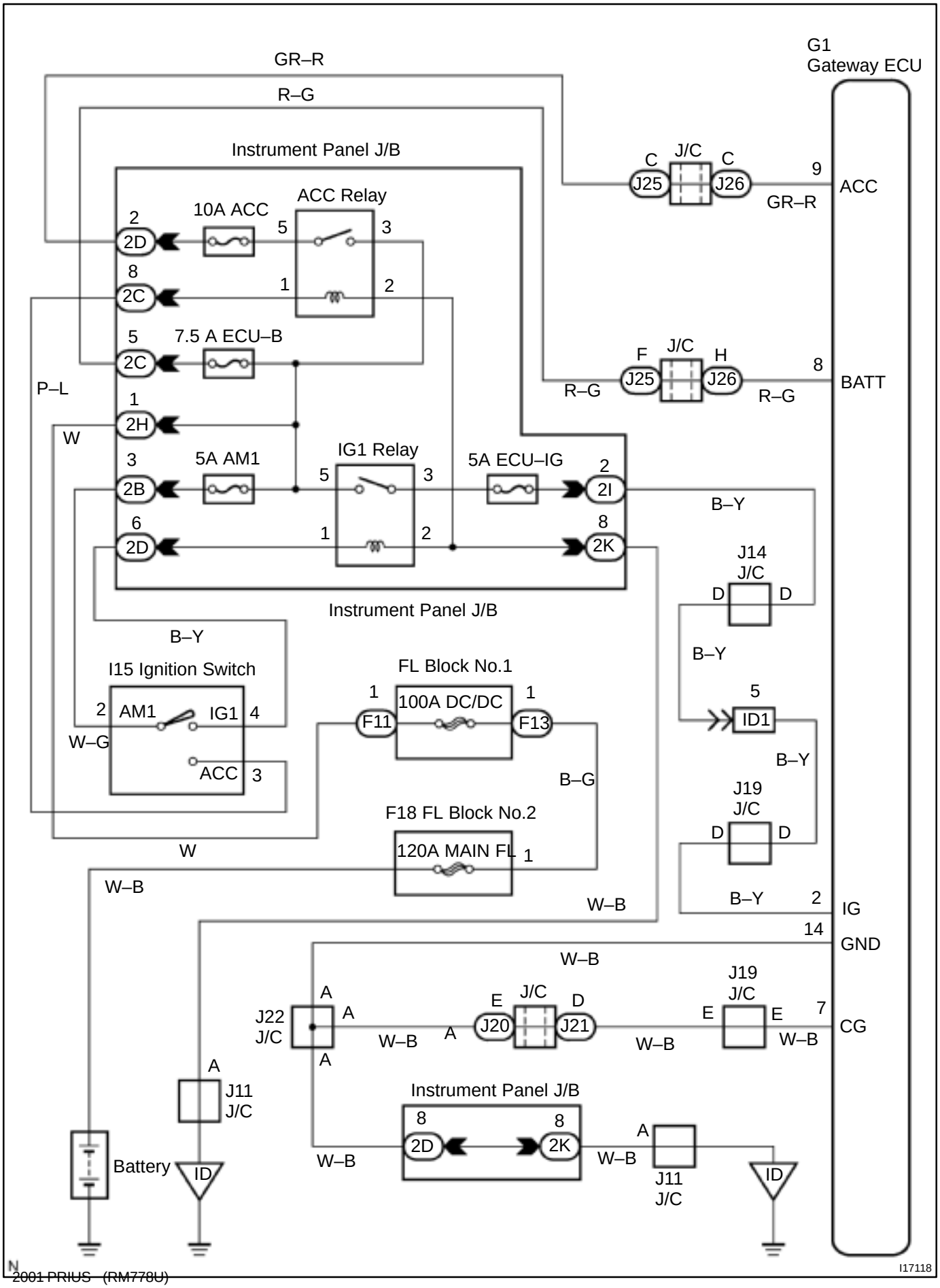

INSPECTION PROCEDURE

1	**Check ECU–B and ECU–IG fuse.**

CHECK:

Check continuity of ECU–B and ECU–IG fuse.

OK:

Continuity

NG → **Replace the failure fuse.**

OK

2	**Check voltage between terminals BATT, IG and GND of body ECU connector.**

PREPARATION:

(a) Turn ignition switch OFF.

(b) Disconnect the gateway ECU connector.

CHECK:

Measure voltage between terminals BATT and GND.

OK:

Voltage: 10 – 14 V

OK → **Check and repair wireharness and connector between gateway ECU and battery.**

NG

3	**Check wireharness and connector between gateway ECU and body ground (See page IN–41).**

NG → **Repair or replace wireharness or connector.**

OK

Check and repair wireharness and connector between gateway ECU and battery.

DI7OR–01

PRE–CHECK

1. DIAGNOSIS SYSTEM MODE

HINT:

Diagnosis System Mode is operated as follows.

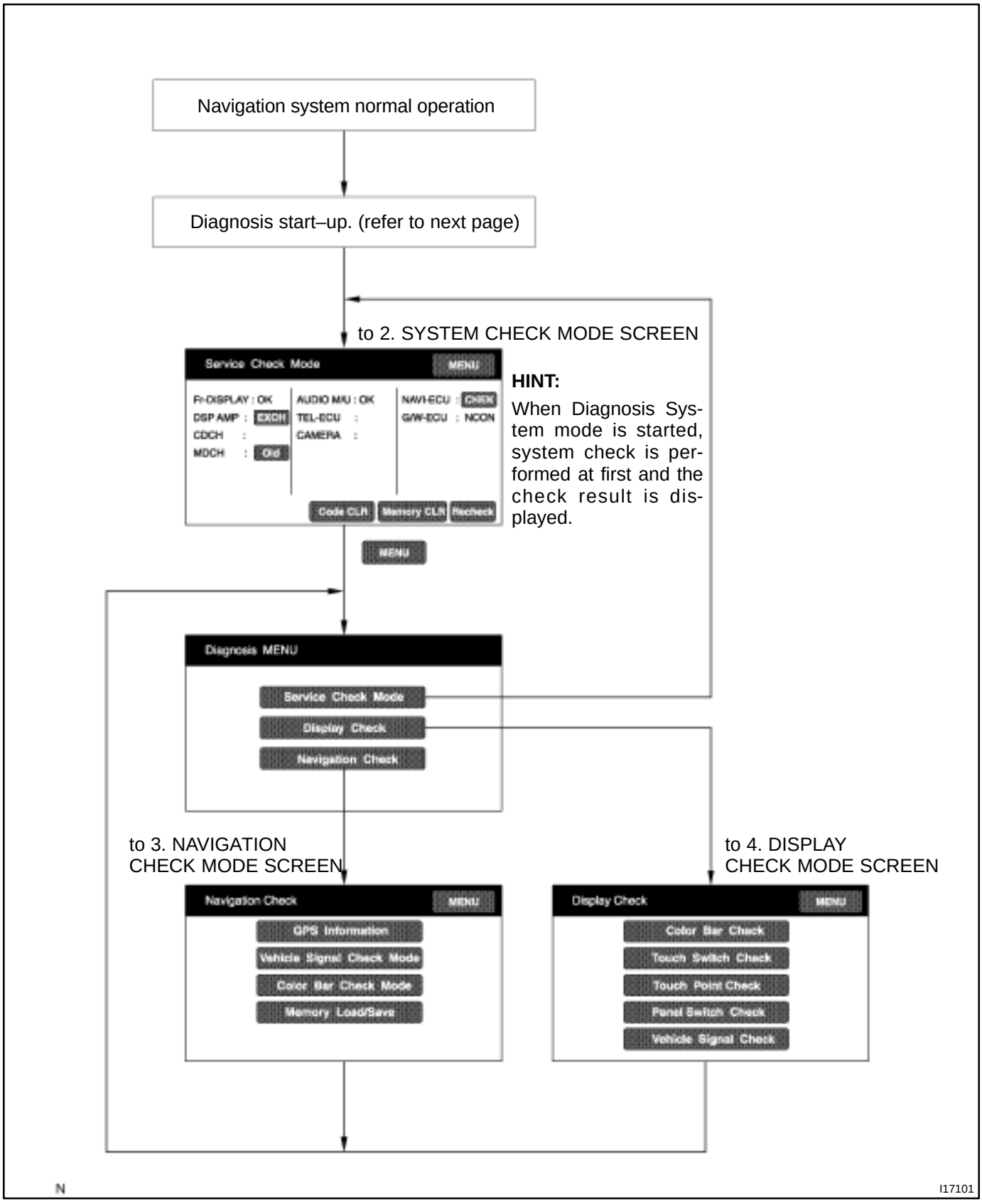

(a) DIAGNOSIS START–UP
To start the diagnosis menu, there are 2 ways: using a diagnosis check wire and using a switch.

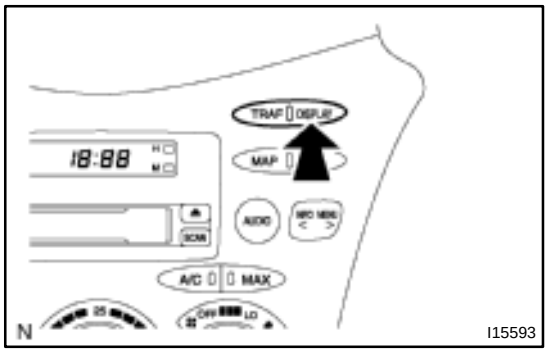

(b) START–UP BY SWITCH OPERATION
(1) Vehicle speed is 0 km/h (0 mph).
(2) Parking brake switch is pressed.
(3) Press the Display switch to display the Screen Adjustment screen.

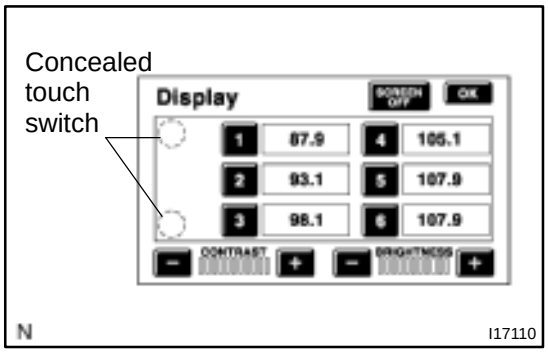

(4) Repeatedly touch the upper and lower bottom parts of the left end of the screen 3 times.

(c) FINISHING DIAGNOSIS SYSTEM MODE
Turn the ignition switch from ACC to OFF to finish the mode. If it is started by switch operation.

2. SERVICE CHECK MODE

HINT:

Service Check Mode is operated as follows.

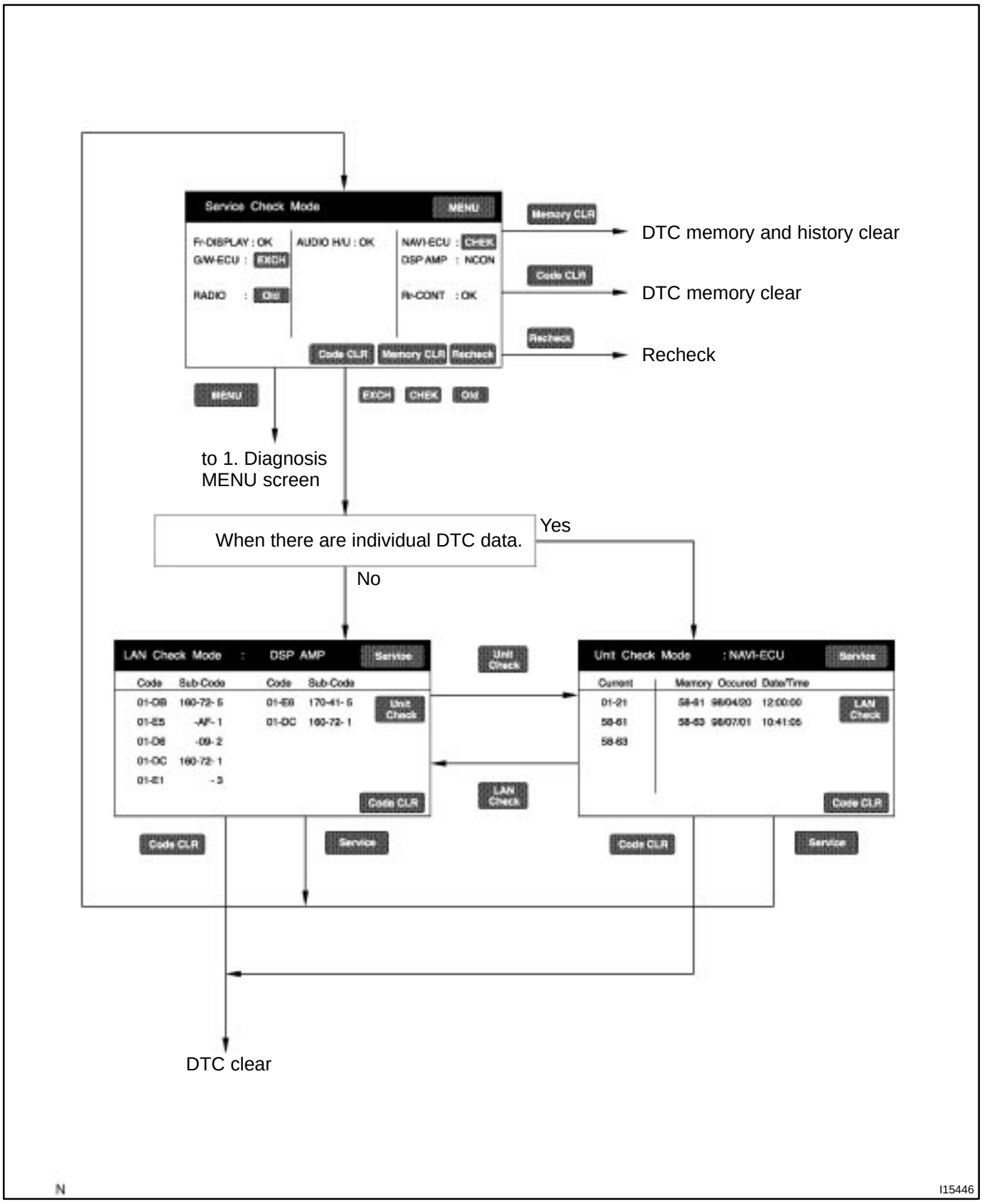

(a) SERVICE CHECK SCREEN

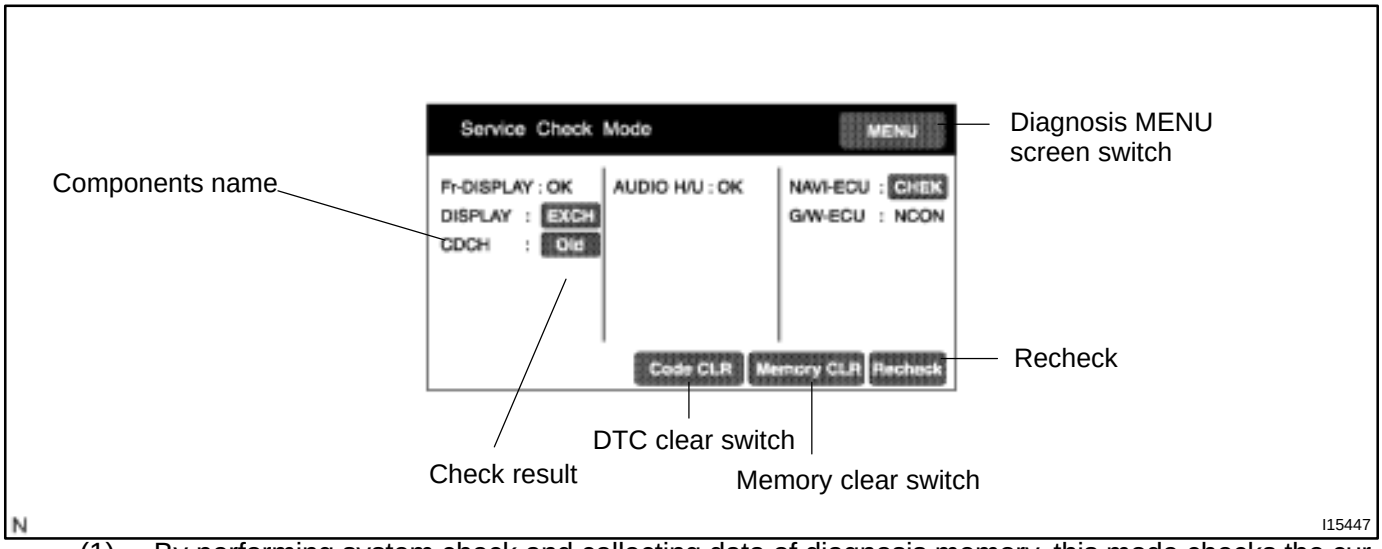

(1) By performing system check and collecting data of diagnosis memory, this mode checks the current and past condition of the vehicle.

(2) List of all components name or physical addresses.
It displays only the components that have been connected at least once.

(3) The check result is displayed for all components.

(4) The check result is displayed by 6 abbreviations: ”OK”, ”EXCH”, ”CHEK”, ”NCON”, ”NRES” and ”Old”. (”EXCH”, ”CHEK” and ”Old” have a function as switches.)

(5) Based on all information obtained from ”System Check Request”, ”Diagnosis Memory Request” and ”Current Diagnosis Result” command, the following results are displayed:
OK: No error is identified.
EXCH: One or more error codes requesting for exchange are detected in any check result.
CHEK: Except the conditions for ”EXCH”, one or more error codes requesting for check are detected in any check result.

(6) The other check results are as follows:
NCON: No response to ”Diagnosis ON Instruction” command and it is not connected when the system is started.
Old: One or more error codes are detected when responding to ”Diagnosis ON Instruction” command because of the old version .
NRES: No response to all commands of ”System Check Request”, ”Diagnosis Memory Request” and ”Current Diagnosis Result”. Or no error is detected by any one of ”System Check Request” or ”Diagnosis Memory Request” when no response to the other command.

(7) ”EXCH”, ”CHEK” and ”Old” are functioned as switches any by pressing these, LAN Check Mode and Unit Check Mode are activated.

(8) Memory Clear Switch
Pressing this switch for 3 sec. deletes all information about master component registration and diagnosis memory of all components.

(9) DTC Clear Switch
Pressing this switch for 3 sec. deletes diagnosis memory of all components.

(10) Recheck Switch
Pressing this switch rechecks the system.

(11) Menu Switch
Pressing this switch activated the Diagnosis Menu Screen.

(b) LAN CHECK MODE SCREEN

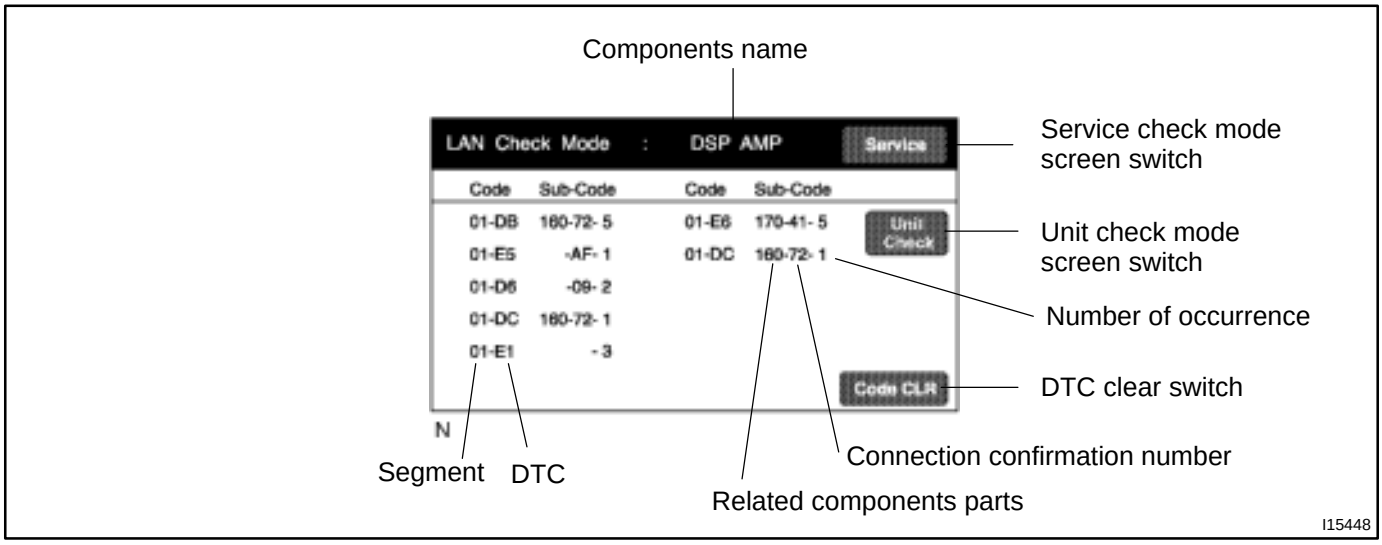

(1) As a detailed screen in the System Check Mode, LAN Check Mode is displayed.
(2) Communication codes (logical address ”01”) are extracted from the diagnosis data obtained by ”Diagnosis Memory Request” and displayed.
(3) Component Name
Names of the components to be checked are displayed.
(4) Segment
Logical address codes corresponding to DTC are displayed.
(5) DTC
DTC displayed.
(6) Related components address
Physical address codes corresponding to DTC are displayed.
(7) Connection Confirmation Number
Connection confirmation numbers corresponding to DTC is displayed.
(8) Number of Occurrence
The number of occurrence of the same DTC is displayed.
(9) DTC Clear Switch
Pressing this switch for 3 sec. deletes DTC memory of the selected diagnosis component. When returning to the System Check Mode, the check result is shown as a blank.
(10) Unit Check Mode Screen Switch
Pressing this switch activates the Unit Check Mode screen.
(11) System Check Mode Screen Switch
Pressing this switch activates the System Check Mode screen.

(c) UNIT CHECK MODE SCREEN

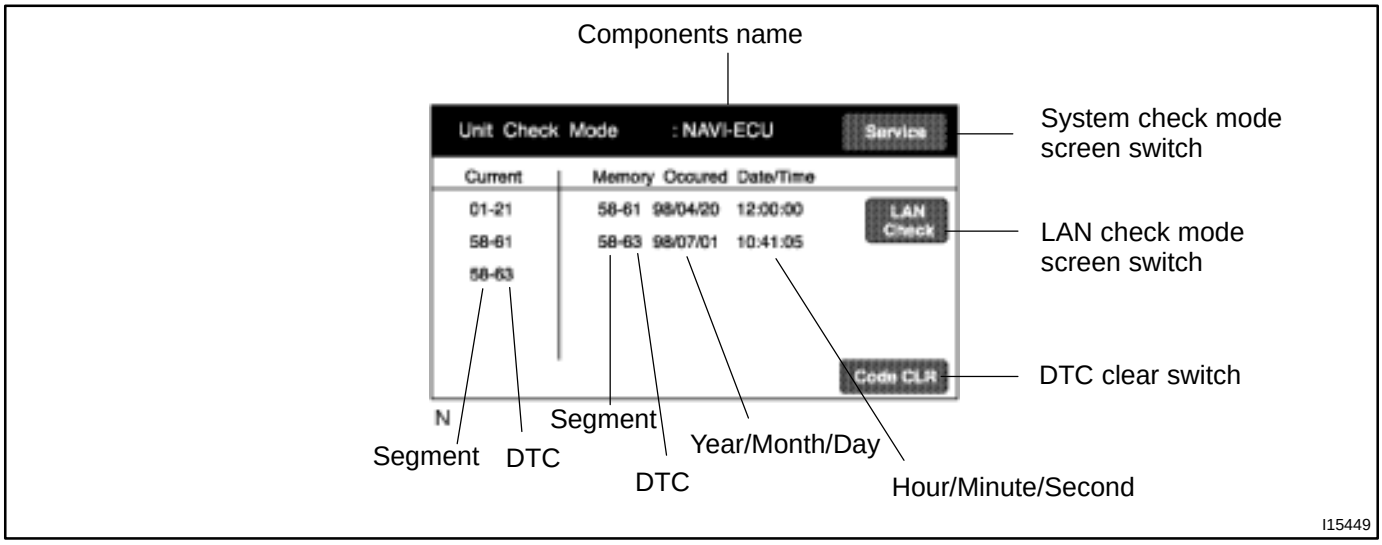

(1) As a detailed screen in the System Check Mode, the Unit Check Mode is displayed.
(2) Up to 6 error codes detected by ”The DTC obtained during the system check (including when starting the diagnosis mode)” can be displayed as ”Current”.
(3) Up to 6 error codes detected by ”DTC stored in the past” can be displayed as ”Memory”.
(4) Component Name
Names of the components are displayed.
(5) Segment
Logical address numbers corresponding to DTC are displayed.
(6) DTC
DTC is displayed.
(7) Year/Month/Day/Hour/Minute/Second
The date and time stamped at the time of code occurrence is displayed in the order of year–month–day–hour–minute–second. (Year is shown in 2–digit number.) If the date and time data is invalid, it is displayed as a blank.

HINT:
Time data is obtained after turning the ignition from ACC to ON. Until the valid time data is obtained, the data shown in the display shall be considered as invalid.
If stored before a valid time data is obtained, the data shall not be displayed.

(8) DTC Clear Switch
Pressing this switch for 3 sec. deletes all diagnosis memory of the component. When returning to the System Check Mode, the check result is displayed as a blank.
(9) Lan Check Mode Screen Switch
Pressing this switch activates the LAN Check Mode screen.
(10) System Check Mode Screen .Switch
Pressing this switch activates the System Check Mode screen.

3. NAVIGATION CHECK MODE

HINT:

Navigation Check Mode is operated as follows.

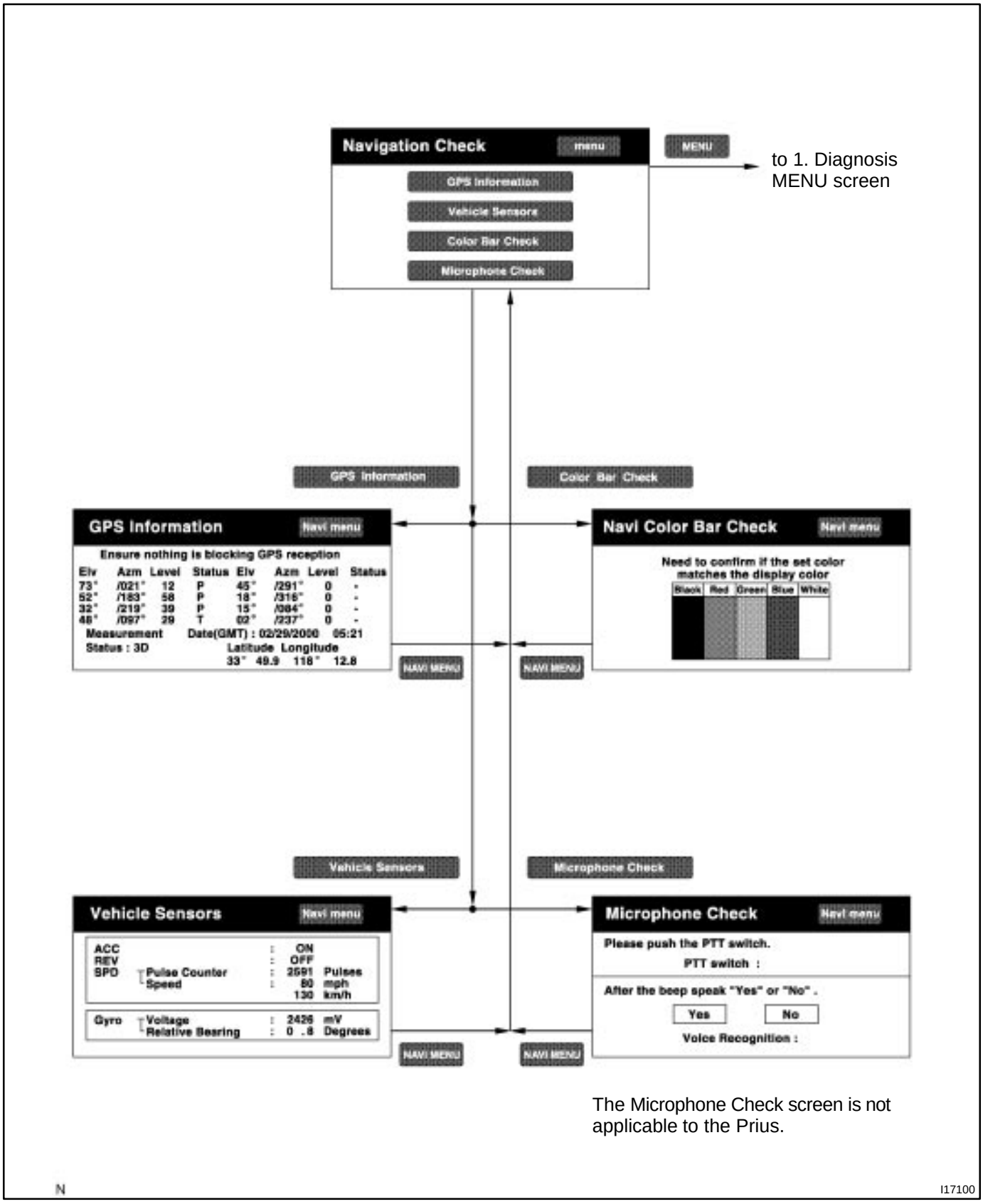

(a) NAVIGATION CHECK MODE SCREEN

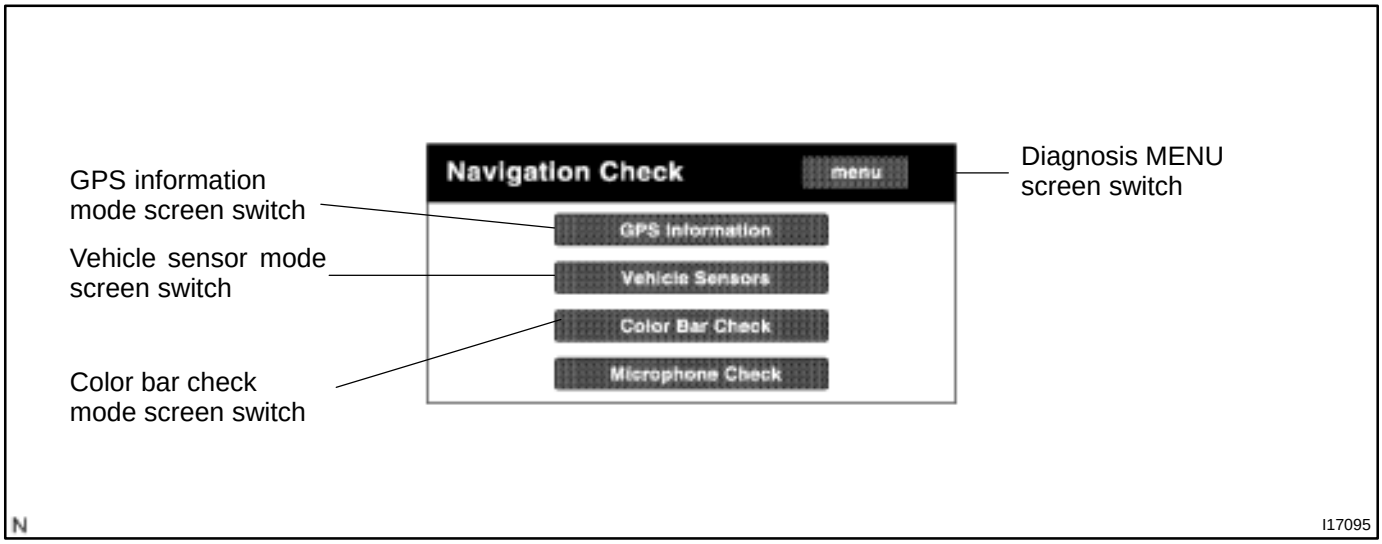

(1) Various check screens for the Navigation ECU can be started from this menu screen.
(2) GPS Information Mode Screen Switch
Pressing this switch activates GPS Information Mode Screen.
(3) Vehicle Sensor Mode Screen Switch
Pressing this switch activates the Vehicle Signal Mode screen.
(4) Color Bar Check Mode Screed Switch
Pressing this switch activates the Color Bar Check Mode screen.
(5) Diagnosis Menu Screen Switch
Pressing this switch activates the Diagnosis Menu screen.

(b) GPS INFORMATION MODE SCREEN

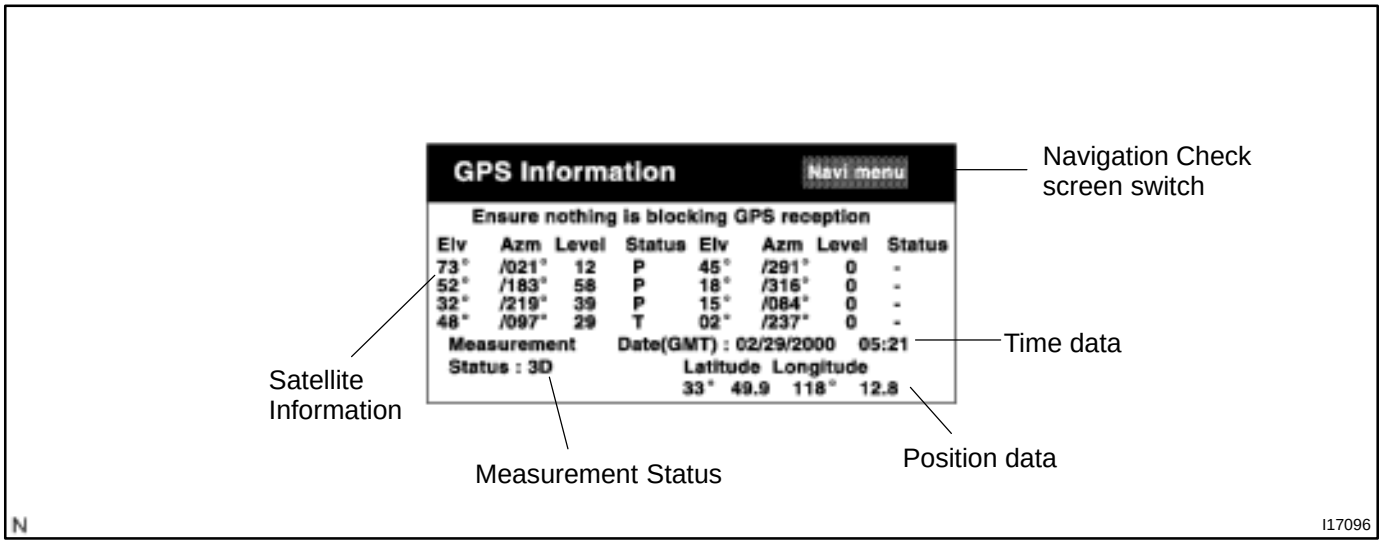

(1) This screen displays GPS related data.

HINT:

Data are updated every 1 sec.

(2) Satellite Information

The angle of elevation of relevant satellite, azimuth signal level, and receiving condition of signals are displayed.

HINT:

The reception status shows receiving.

”T”: means in operation but measurement is not being used for positioning.

”P”: means measurement is being used for positioning.

”–”: means no data can be received.

Display area for up to 8 satellites is ensured.

Data shall be updated corresponding to change of information.

(3) Time data: The time data obtained from a GPS receiver is displayed in month, day, year, hour and minute.

(4) The displayed time is Greenwich Mean Time.

(5) Position Data: The latitude and longitude of the current location are displayed in degree and minute.

(6) Measurement Status is displayed in the following 5 items.

2D: 2 dimensions.

3D: 3 dimensions.

NG: GPS information cannot be used.

error: Receiving error occurs.

–: Other than the above.

(7) Navigation Check Screen Switch

Pressing this switch activates the Navigation Check screen.

(c) VEHICLE SIGNAL CHECK MODE SCREEN

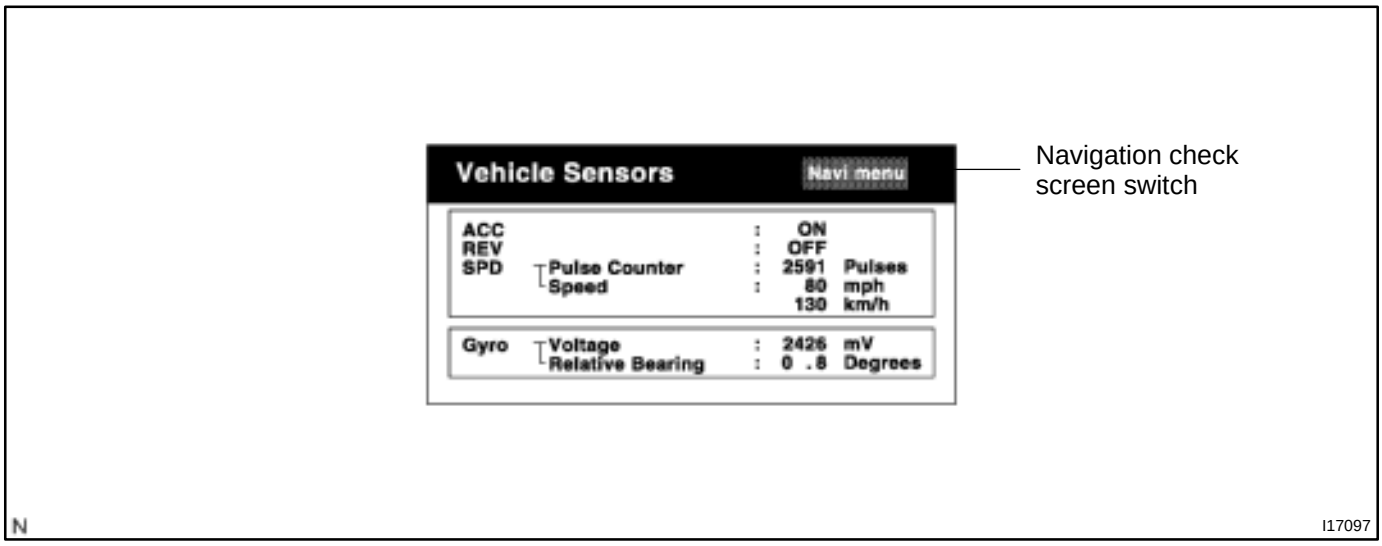

(1) Status of the vehicle sensor which are input to the Navigation ECU is checked in this screen.

HINT:

Data are updated every 1 sec.

(2) ACC signal status: Displayed as ON/OFF.

(3) REV signal status: Displayed as ON/OFF.

(4) SPD signal status: The following is displayed:

- The cumulative value of the input pulse after displaying this screen. (shown in 5 digits)
- Vehicle speed (Unit: km/h, mph)

(5) Output condition of the gyro sensor: The following is displayed:

- Voltage (Unit: mV, LSB: 1mV)
- Relative azimuthal angle to the current point (0 degree).
  Assuming the angle at a point when this screen is activated as 0 degree.

(6) Navigation Check Menu Screen Switch
Pressing this switch displays the Navigation Check screen.

(d) COLOR BAR CHECK MODE SCREEN

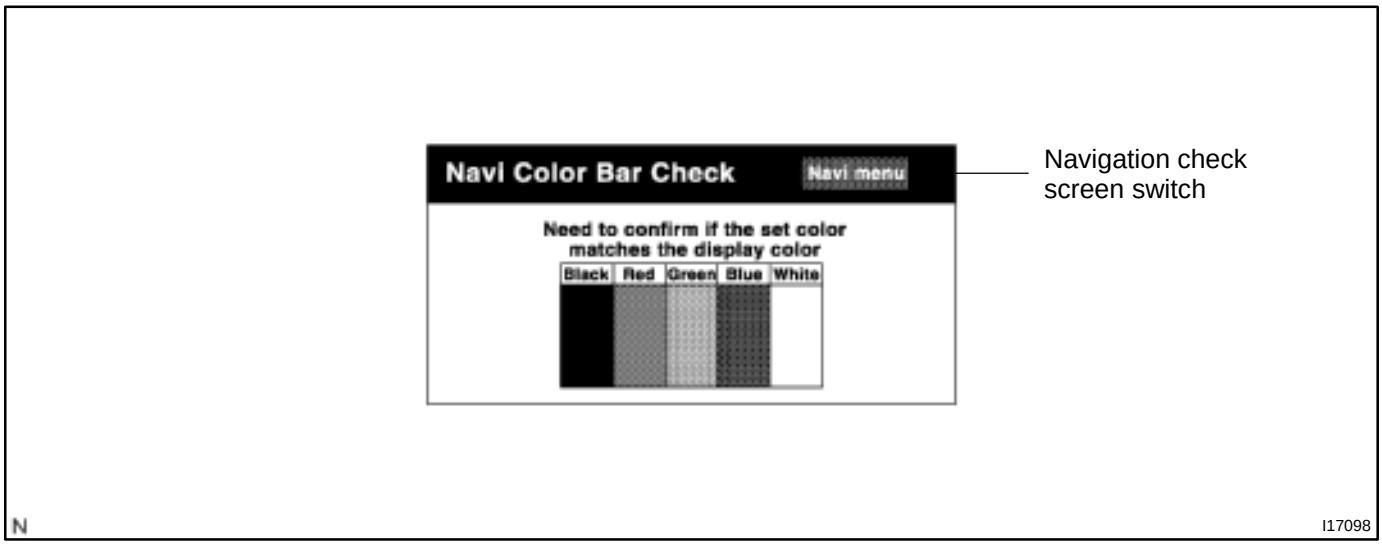

(1) Color display of the Navigation ECU is checked in this screen.
(2) Color Bars:
Five colors of ”BLACK”, ”RED”, ”GREEN”, ”BLUE” and ”WHITE” are displayed as bars.
(3) Navigation Check Screen Switch
Pressing this switch displays the Navigation Check screen.

4. DISPLAY CHECK MODE

HINT:

Display Check Mode is operated as follows.

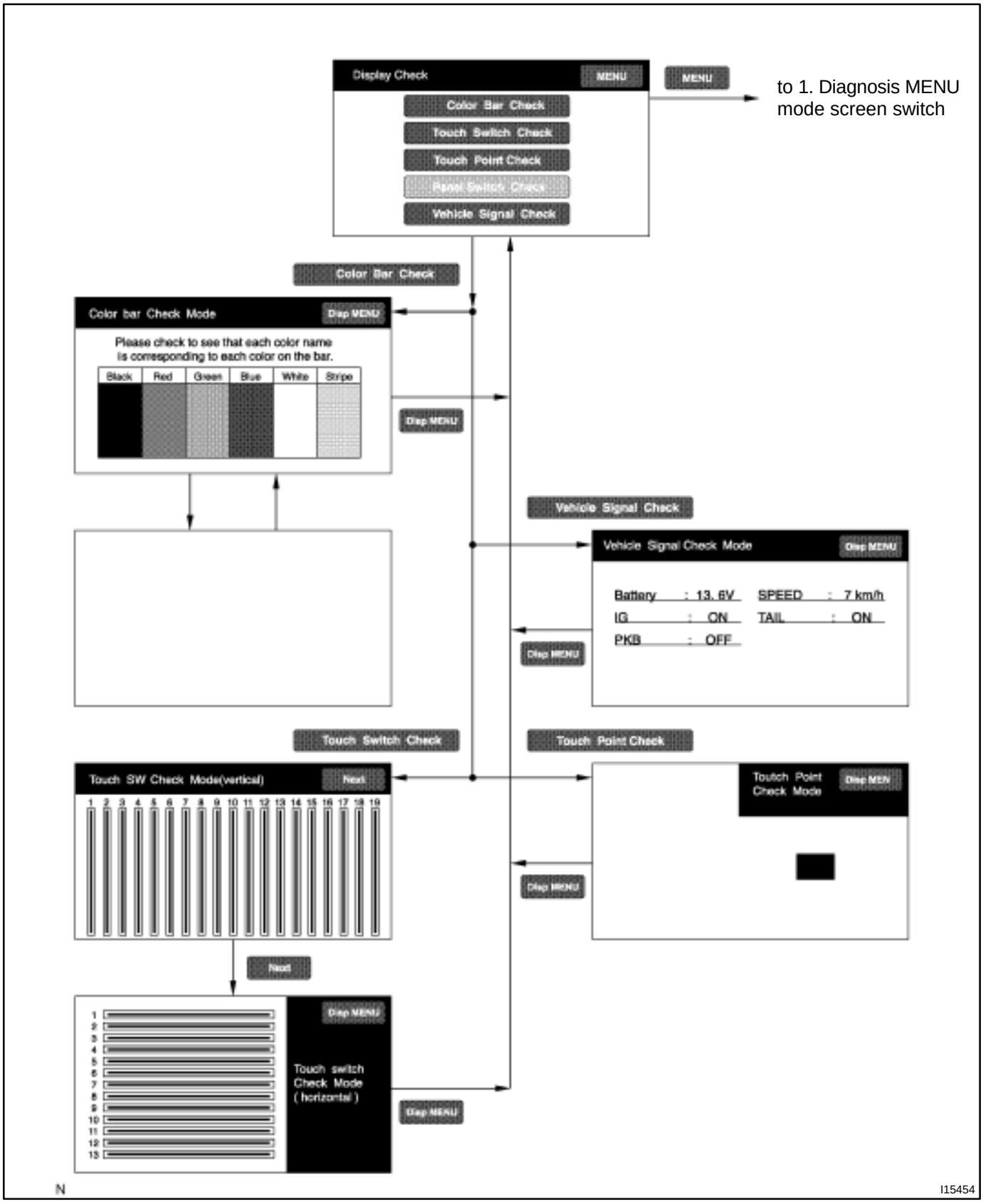

(a) DISPLAY CHECK MENU SCREEN

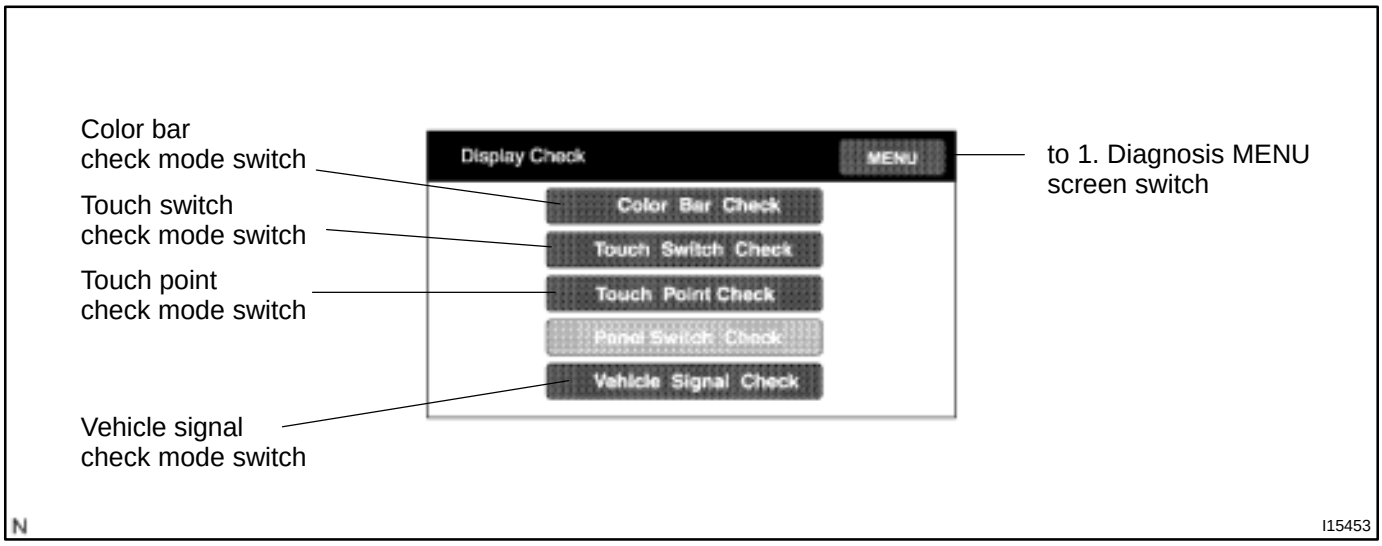

(1) Various screens to check the display are started from this screen.
(2) Color Bar Check Mode Switch
Pressing this switch activates the Color Bar Check Mode screen.
(3) Touch Switch Check Mode Switch
Pressing this switch activates the Touch Switch Check Mode screen.
(4) Touch Point Check Mode Switch
Pressing this switch activates the Touch Point Check Mode screen.
(5) Vehicle Signal Check Mode Switch
Pressing this switch activates the Vehicle Signal Check Mode screen.
(6) Diagnosis MENU Screen Switch
Pressing this switch activates the Diagnosis MENU screen.

(b) COLOR BAR CHECK MODE SCREEN

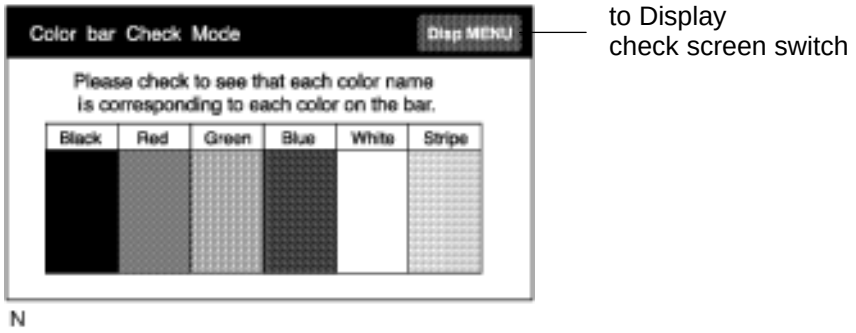

(1) Color display is checked in this screen.

(2) Color Bar:

Black, Red, Green, Blue, White and Stripe is displayed in bars.

If a bar is touched, color or stripe of the bar is appeared all over the screen. When touched again, it returns to the previous screen.

(3) Display Check Screen Switch

Pressing this switch activates the Display Check Mode screen.

(c) TOUCH SWITCH CHECK MODE SCREEN

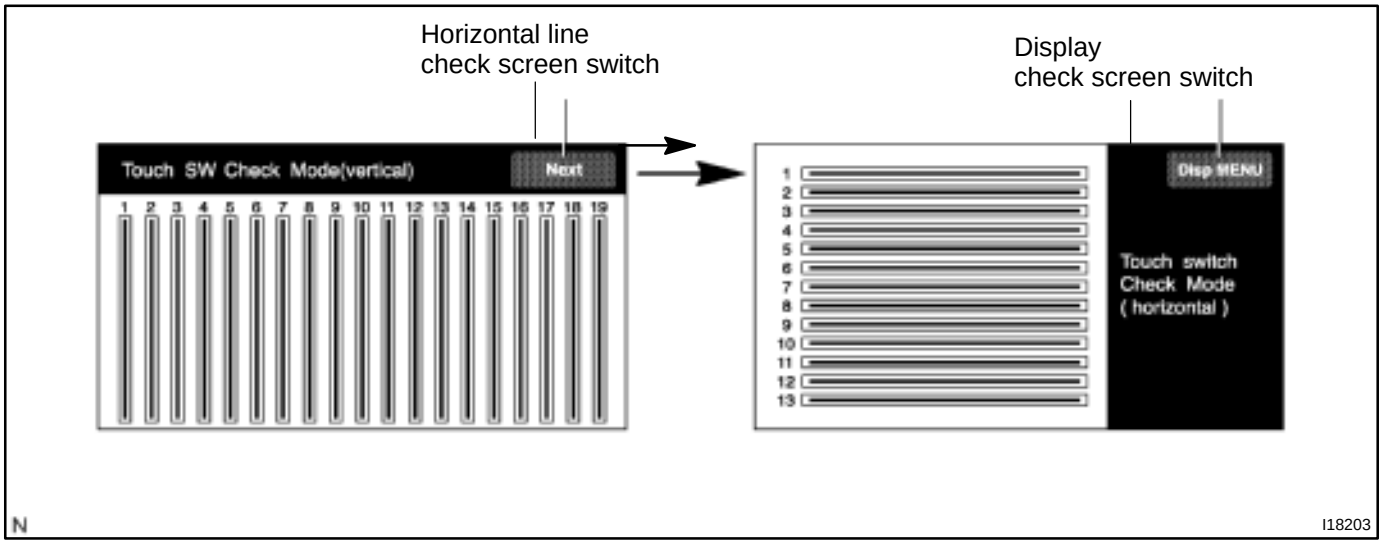

(1) Operating condition is checked line by line in the Touch Switch Check Mode screen.
(2) Check Line:
Lines are displayed by using infrared beams in this screen.
Once a beam is blocked off by touching the screen with a fingertip, the blocked part of the line is deleted.
(3) Horizontal Line Check Screen Switch:
Pressing this switch activates a screen in which beams of horizontal lines are checked.
(4) Display Check Mode Switch
Pressing this switch activates the Display Check Mode screen.

(d) TOUCH POINT CHECK MODE SCREEN

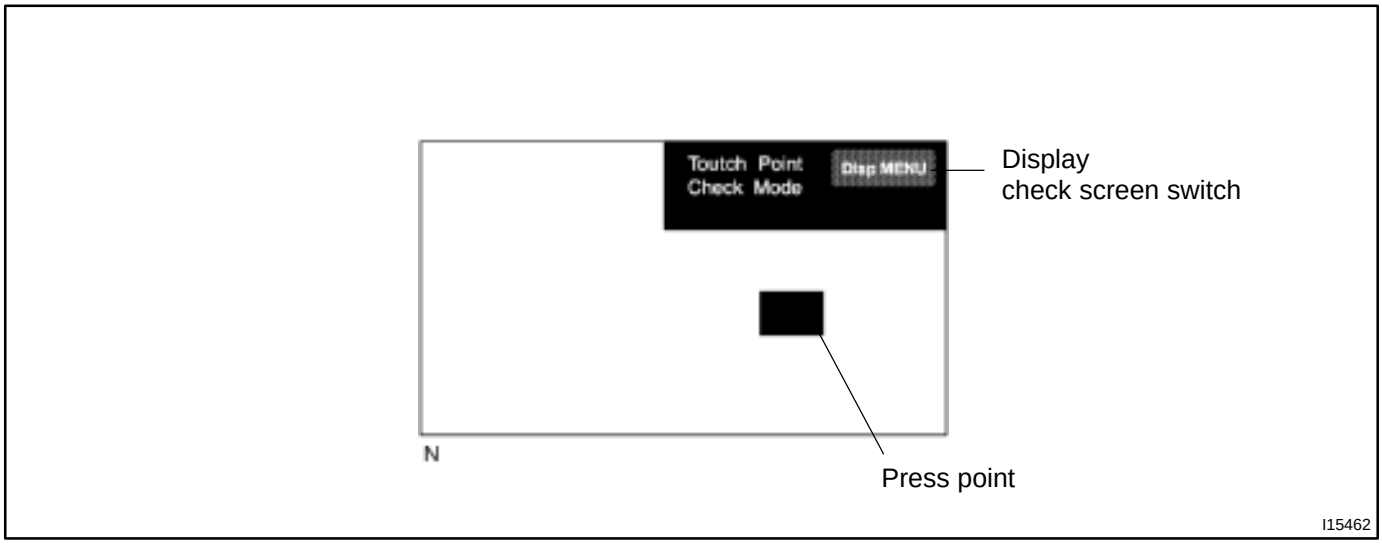

(1) In this screen, the position detected by the pressure sensing touch switch is checked.
(2) Press point:
The detected point is indicated by a cross–hair cursor.
(3) Display Check Screen Switch
Pressing this switch activates the Display Check Mode screen.

(e) VEHICLE SIGNAL CHECK MODE SCREEN

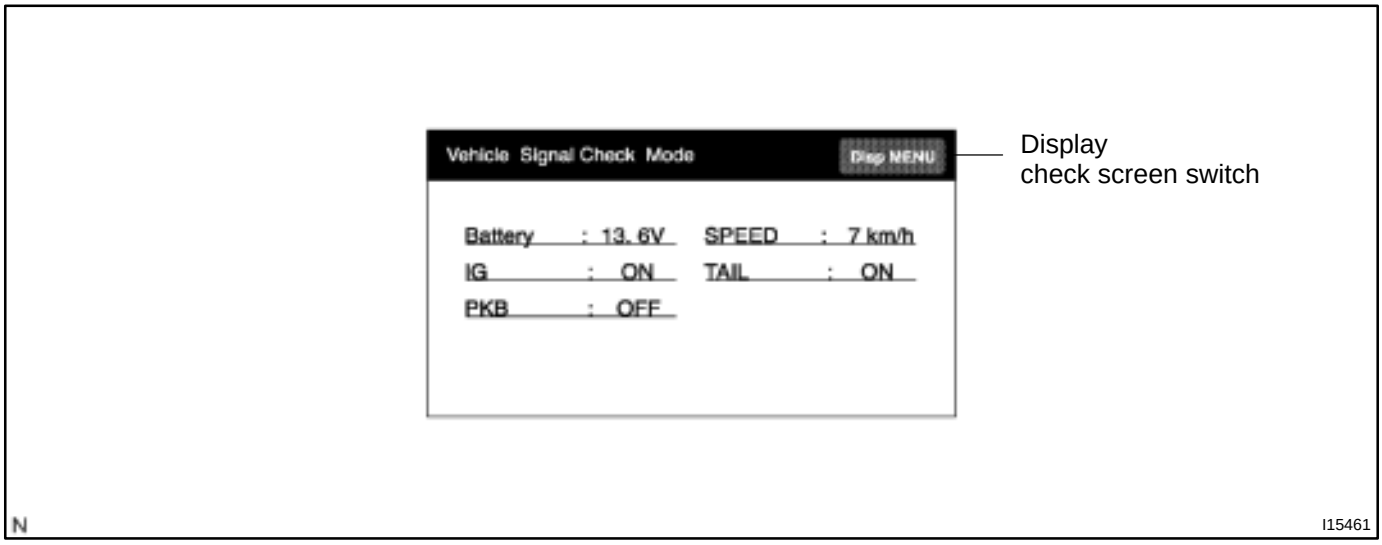

(1) Status of the Vehicle Signal which has been loaded into the display is checked in this screen.
(2) Signal Description
Battery: Displays battery voltage in V.
IG: Displays ON or OFF of the ignition switch.
PKB: Displays ON (applied) or OFF (released) of the parking brake.
SPEED: Displays the vehicle speed in km/h.
TAIL: Displays ON or OFF of the tail light switch.
(3) Display Check Screen Switch
Pressing this switch activates the Display Check Mode screen.

DI27Z–05

DIAGNOSTIC TROUBLE CODE CHART

Terms	Meaning
Physical address	Three–digit code (shown in hexadecimal) which is given to each component comprising the AVC – LAN Corresponding to the function, individual symbols are specified..
Logical address	Two–digit code (shown in hexadecimal) which is given to each function comprising the inner system of the AVC – LAN.

Physical address: 110 Multi display

Logical address	DTC	Diagnosis item	Diagnosis content	Countermeasure and inspected parts
21 *1 (Switch)	10	Panel Switch Error	Error in panel switch input part is detected. (Error in switch control part, or internal communication error with switch control part is detected.)	● Inspect all switches on touch switch test screen in display check mode. If any of lines and point does not react, replace multi–display assembly. ● If all switches function without problem, observe them for a while.
21 (Switch)	11	Touch Switch Error	Error in touch switch sensor is detected.	● Inspect all touch switches on touch switch test screen in display check mode. If any of lines does not react, replace multi–display assembly. ● If all of vertical and horizontal lines react normally, observe them for a while.
34 (Front passenger monitor)	10	Error in Picture Circuit	Error in power supply system for picture circuit (abnormal voltage) is detected.	Replace multi–display assembly.
34 (Front passenger monitor)	11	Backlight Error (No current)	Decline in power output from inverter circuit for backlight.	Replace multi–display assembly.
34 (Front passenger monitor)	12	Backlight Error (Excess current)	Excess power output from inverter circuit for backlight.	Replace multi–display assembly.
01 (Communication control)	21	ROM Error	Abnormal condition of ROM is detected.	Replace multi–display assembly.
01 (Communication control)	22	RAM Error	Abnormal condition of RAM is detected.	Replace multi–display assembly.

*1: Check if the operation in Touch Point Check or Touch Switch Check screen is normal. If it operates without any problem, see how things go for a while.
Although this code is defined as Panel Switch Error, there are touch switches only on the display. If the internal communication is erroneous, however, this code is stored.

01 *2 (Communication Control)	D5	Registered component disconnected	Component shown by auxiliary code is or was disconnected from system with ignition switch in ACC or ON. Communication with component shown by auxiliary code is not established when engine is started.	● Check harness for power supply of component shown by auxiliary code ● Check harness for communication system of component shown by auxiliary code
01 *3 (Communication Control)	D8	No response to connection check	Component shown by auxiliary code is or was disconnected from system after engine is started.	● Check harness for power supply of component shown by auxiliary code ● Check harness for communication system of component shown by auxiliary code
01 *2 (Communication Control)	D9	Last Mode Error	Component operated (sound and/or image was provided) before engine stop is or was disconnected with ignition switch in ACC or ON.	● Check harness for power supply of component shown by auxiliary code ● Check harness for communication system of component shown by auxiliary code
01 (Communication Control)	DA	No Response to ON/OFF Instruction	No response is identified when changing mode (audio and visual mode change). Detected when sound and picture does not change by button operation.	● Check harness for power supply of component shown by auxiliary code. ● Check harness for communication system of component shown by auxiliary code. ● If error occurs again, replace component shown by auxiliary code.
01 *2 (Communication Control)	DB	Mode Status Error	Dual sound is detected.	● Check harness for power supply system of component shown by auxiliary code. ● Check harness for communication system of component shown by auxiliary code.
01 *4 (Communication Control)	DC	Transmission Error	Transmission to component shown by auxiliary code has been failed. (This code does not necessarily mean actual failure.)	If same component shown by auxiliary code is recorded in other component(s), check harness for power supply and communication system of components shown sub code.
01 *5 (Communication Control)	DE	Slave Reset (Momentary Interruption)	After engine start, slave component has been disconnected. DB	● Check harness for power supply system of component shown by auxiliary code. ● Check harness for communication system of component shown by auxiliary code.
01 *1 (Communication Control)	E4	Multiple Frame Abort	Multiple frame transmission is aborted.	Since this DTC is provided for engineering, it may be detected when no actual failure exists.

*2: Even if no failure is detected, it may be stored depending on the battery condition or voltage for starting an engine.

*3: It is stored when 180 sec. has passed after the power supply connector is pulled out after engine start.

*4: It may be stored when the engine key is turned again 1 min. after engine start.

*5: It may be stored when the engine key is turned again after engine start.

Physical address: 190 Radio receiver assembly

Logical address	DTC	Diagnosis item	Diagnosis content	Countermeasure and inspected parts
01 (Communication Control)	21	ROM Error	Error is detected in internal ROM.	Replace radio receiver assembly.
01 (Communication Control)	22	RAM Error	Error is detected in internal RAM.	Replace radio receiver assembly.
01 *2 (Communication Control)	D6	Absence of Master	Component in which this code is recorded has been disconnected from system with ignition in ACC or ON. Or, when this code was recorded, multi–display assembly was disconnected.	● Check harness for power supply system of multi display. ● Check harness for communication system of multi display. ● Check harness for power supply system of radio receiver assembly. ● Check harness for communication system of radio receiver assembly.
01 *3 (Communication Control)	D8	No Response to Connection Check	Component shown by auxiliary code is or had been disconnected from system after engine start. D9	● Check harness for power supply system of component shown by auxiliary code. ● Check harness for communication system of component shown by auxiliary code.
01 *2 (Communication Control)	D9	Last Mode Error	Component operated (sounds and/or images were provided) before engine stop is or has been disconnected with ignition switch in ACC or ON.	Check harness for power supply system of component shown by auxiliary code. Check harness for communication system of component shown by auxiliary code.
01 (Communication Control)	DA	No Response to ON/OFF Instruction	No response is identified when changing mode (audio and visual mode change). Detected when sound and picture does not change by button operation.	● Check harness for power supply of component shown by auxiliary code. ● Check harness for communication system of component shown by auxiliary code. ● If error occurs again, replace component shown by auxiliary code.
01 *2 (Communication Control)	DB	Mode Status Error	Dual alarm is detected.	● Check harness for power supply of component shown by auxiliary code. ● Check harness for communication system of component shown by auxiliary code.
01 *4 (Communication Control)	DC	Transmission Error	Transmission to component shown by auxiliary code has been failed. (Detecting this DTC does not necessary mean actual failure.)	● If same auxiliary code is recorded in other component, check harness for power supply and communication system of components shown sub code.
01 *5 (Communication Control)	DD	Master Reset (Momentary Interruption)	After engine is started, multi–display assembly was disconnected from system.	● If this error occurs frequently, replace multi–display assembly.

01 *5 (Communication Control)	DE	Slave Reset (Momentary Interruption)	After engine is started, slave component was disconnected from system.	● Check harness for power supply of component shown by auxiliary code. ● Check harness for communication system of component shown by auxiliary code.
01 *6 (Communication Control)	DF	Master Error	Due to defective condition of multi display, master function is switched to audio equipment. Error occurs in communication between sub–master (audio) and multi display.	● Check harness for power supply of multi–display assembly. ● Check harness for communication system of multi–display assembly. ● Check harness for communication system between multi–display assembly and sub–master component.
01 (Communication Control)	E0	Registration Completion Instruction Error	”Registration Completion Instruction” command from multi display cannot be received.	● Since this DTC is provided for engineering purpose, it may be detected when no actual failure exists.
01 *2 (Communication Control)	E1	Audio processor ON error	While source equipment is operating, AMP output is stopped.	● Check harness for power supply of multi–display assembly. ● Check harness for communication system of multi–display assembly.
01 (Communication Control)	E2	ON/OFF Instruction Parameter Error	Error occurs in ON/OFF controlling command from multi–display assembly.	● Replace multi–display assembly.
01 (Communication Control)	E3	Registration Request Transmission	Registration Request command is output from slave component. Receiving Connection Check Instruction, Registration Request command is output from sub–master component.	● Since this DTC is provided for engineering purpose, it may be detected when no actual failure exists.
01 (Communication Control)	E4	Plural Frame Abort	Plural frame transmission is aborted.	● Since this DTC is provided for engineering purpose, it may be detected when no actual failure exists.
60 (Radio receiver assembly)	43	AM Tuner Error	Abnormal condition is detected in AM tuner. Inspect radio receiver assembly.	Replace radio receiver assembly.
60 (Radio receiver assembly)	44	FM Tuner Error	Abnormal condition is detected in FM tuner.	Replace radio receiver assembly.
61 (Cassette switch)	40	Mechanical or Media Error	Malfunction due to mechanical failure is identified. Or, cassette tape is cut or entangled.	Inspect cassette tape.
61 (Cassette switch)	41	EJECT Malfunction	Malfunction due to mechanical failure.	Replace radio receiver assembly.
62 (CD player)	42	No Disc Readout	Disc cannot be read.	Inspect CD.
62 (CD player)	44	CD Error	Error is detected in CD player.	Replace radio receiver assembly.

62 (CD player)	45	EJECT Error	Magazine cannot be ejected.	Replace radio receiver assembly.
62 (CD player)	46	Scratched/ Reversed Disc	Scratches or dirt is found on CD surface or CD is set upside down.	Inspect CD.

*2: Even if no failure is detected, it may be stored depending on the battery condition or voltage for starting an engine.

*3: It is stored when 180 sec. has passed after the power supply connector is pulled out after engine start.

*4: It may be stored when the engine key is turned again 1 min. after engine start.

*5: It may be stored when the engine key is turned again after engine start.

*6: When 210 sec. has passed after pulling out the power supply connector of the master component with the ignition switch in ACC or ON, this code is stored.

Physical address: 178 Navigation ECU

58 (Navigation ECU)	10	Gyro Error	Error in gyro sensor is detected. (Abnormal value in voltage output from sensor is detected for more than specified time.)	● Check the Gyro voltage in the diagnosis system mode.
58 (GPS receiver)	11	GPS Receiver Error	Operation error of GPS receiver is detected.	● At an outdoor site with a clear view, operate to display the GPS information screen of the diagnosis system. If GPS time stamp is not properly displayed after 15 min. or more, replace navigation ECU.
58 (GPS receiver)	40	GPS Antenna Error	Operation condition of GPS antenna cable is detected. (Open circuit, connection failure of connectors, etc.)	● Check if the GPS antenna is correctly connected or positioned or not. After replacing the antenna, if the error remains, replace the navigation ECU.
58 (GPS receiver)	41	Power Supply Error of GPS Antenna	Abnormal voltage of GPS antenna cable or short circuit is detected.	● Inspect GPS antenna and replace if necessary. (When no continuity is identified between connector's core and sealed part, GPS antenna is normal.) ● If GPS antenna is normal, replace navigation ECU.
58 (Navigation ECU)	42	Map Disc Error	Data cannot be read for a specified time due to scratches or dirt on disc surface or insertion of music CD.	● Inspect disc and replace if necessary. (Visually check disc surface and wipe it with soft cloth.)
58 (Navigation ECU)	43	Vehicle speed sensor Signal Error	Input error of vehicle speed sensor signal is detected. (When no vehicle speed sensor signal has been input for a specified time.)	● Check the vehicle speed signal in the diagnosis system mode. ● Inspect wire harness for vehicle speed signal. ● If wire harness is normal, replace navigation ECU.
58 (Navigation ECU)	44	Player Error	Malfunction of player continues for a specified length of time.	● Check if disc can be inserted/taken out or not. If not , replace navigation ECU. ● When the same code is detected in recheck after deleting the DTC memory.
58 (Navigation ECU)	45	Player Temp. Too High	Readout cannot be done because temperature around player's pickup (reading part) is too high.	With IG switch OFF, leave vehicle in cool shaded place for a while and recheck. After deleting the DTC memory, If same code detected, replace navigation ECU.

01 (Communication Control)	D6	Absence of Master	Component in which this code is recorded has been disconnected from system with ignition in ACC or ON. Or, when this code was recorded, multi–display assembly was disconnected.	● Check harness for power supply system of multi display. ● Check harness for communication system of multi display. ● Check harness for power supply system of navigation ECU. ● Check harness for communication system of navigation ECU.
01 *6 (Communication Control)	D7	Connection Check Error	Component in which this code is recorded has been disconnected from system after engine start. Or, when this code was recorded, multi–display assembly was disconnected. D6	● Check harness for power supply system of multi display. ● Check harness for communication system of multi display. ● Check harness for power supply system of navigation ECU. ● Check harness for communication system of navigation ECU.
01 (Communication Control)	DC	Transmission Error	Transmission to component shown by auxiliary code has been failed. (This code does not necessarily mean actual failure.)	If same auxiliary code is recorded in other component(s), check harness for power supply and communication system of components shown sub code.
01 (Communication Control)	DD	Master Reset (Momentary Interruption)	After engine is started, multi–display assembly was disconnected from system.	● Check harness for power supply system of multi–display assembly. ● Check harness for communication system of multi–display assembly. ● If error occurs frequently, replace multi–display assembly.
01 (Communication Control)	DF	Master Error	Due to defective condition of component with a display, master function is switched to audio equipment . Error occurs in communication between sub–master (audio) and master component.	● Check harness for power supply of multi–display assembly. ● Check harness for communication system of multi–display assembly. ● Check harness for communication system between multi–display assembly and sub–master component.
01 (Communication Control)	E0	Registration Completion Instruction Error	”Registration Completion Instruction” command from multi display cannot be received.	Since this DTC is provided for engineering, it may be detected when no actual failure exists.
01 (Communication Control)	E2	ON/OFF Instruction Parameter Error	Error is detected in ON/OFF control command from multi–display assembly.	Replace multi–display assembly.
01 (Communication Control)	E3	Registration Request Transmission	● Registration Request command is output from slave component. ● By reception of connection check Instruction, Registration Request command is output from sub–master component.	Since this DTC is provided for engineering, it may be detected when no actual failure exists.
01 (Communication Control)	E4	Plural Frame Abort	Plural frame transmission is aborted.	● Since this DTC is provided for engineering purpose, it may be detected when no actual failure exists.

*6: When 210 sec. has passed after pulling out the power supply connector of the master component with the ignition switch in ACC or ON, this code is stored.

DI7OT–01

TERMINALS OF ECU

MULTI DISPLAY

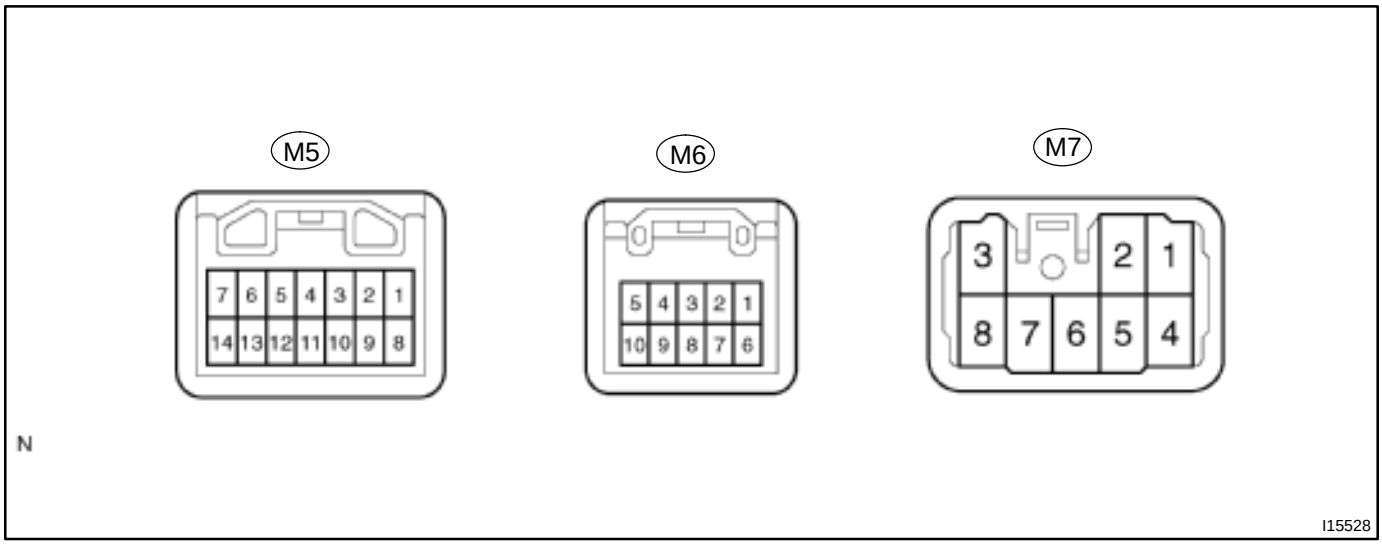

Symbols (Terminals NO.)	Condition	STD Voltage (V)	Problem symptom when open circuit is detected. / Problem symptom when short circuit is detected.
TX+ (M5–3)	Ignition switch ACC or ON	About 2.5 V	Screen is in disorder.
TX3+ (M5–4)	Ignition switch ACC or ON	About 2.5 V	Screen is in disorder.
SPD – GND (M5–5 – M7–6)	Ignition switch ON, and driving wheel rotated slowly	Repeatedly changes from below 1 to 9 V	Fuel efficiency cannot be calculated.
TX– (M5–10)	Ignition switch ACC or ON	About 2.5 V	Screen is in disorder.
TX3– (M5–11)	Ignition switch ACC or ON	About 2.5 V	Screen is in disorder.
PKB – GND (M5–13 – M7–6)	Parking brake switch ON (parking brake lever released)	5 V	The system cannot enter Diagnosis System mode.
TC – GND (M5–14 – M7–6)	Ignition switch OFF and connect thermals TC and E1 of diagnosis check connector	Continuity	Navigation system is normal. / The system cannot exit Service Check mode.
VR – VG (M6–1 – M6–6)	Constant	Continuity	Screen noise or other types of noise occur.
R – VG (M6–2 – M6–6)	Diagnosis display check screen is white (Using an oscilloscope)	0.7 V ± 0.1 V *2	Screen color turns to blue.
B – VG (M6–3 – M6–6)	Diagnosis display check screen is white (Using an oscilloscope)	0.7 V ± 0.1 V *2	Screen color turns to yellow.
TX1+ (M6–5)	AVC–LAN communication circuit	–	Navigation system does not operate.
VG – GND (M6–6 – M7–6)	Constant	Continuity	Screen noise or other types of noise occur. / Navigation system does not operation.
G – VG (M6–7 – M6–6)	Diagnosis display check screen is white (Using an oscilloscope)	0.7 V ± 0.1 V *2	Screen color turns to red–purple.

SYNC – VG (M6–8 – M6–6)	Display ON (Using an oscilloscope)	0.5 V – 1.3 V *1	Screen is in disorder
TX1– (M6–10)	AVC–LAN communication circuit	–	Navigation system does not operate.
+B1 – GND (M7–1 – M7–6)	Constant	10 – 14 V	Navigation system does not operate.
IG – GND (M7–2 – M7–6)	Ignition switch ON	10 – 14 V	Navigation system does not operate.
DR – GND (M7–3 – M7–6)	Light control switch TAIL or HEAD and cover the top of automatic light control sensor	9 V or more	No problem is identified in the display.
ACC – GND (M7–4 – M7–6)	Ignition switch ACC	10 – 14 V	Navigation system does not operate.
GND – Body ground (M7–6 – Body ground)	Constant	Below 1 V	Audio system is normal.
TAIL – GND (M7–8 – M7–6)	Light control switch TAIL or HEAD	9 V or more	Switching between Night and Day mode cannot be done.

NAVIGATION ECU

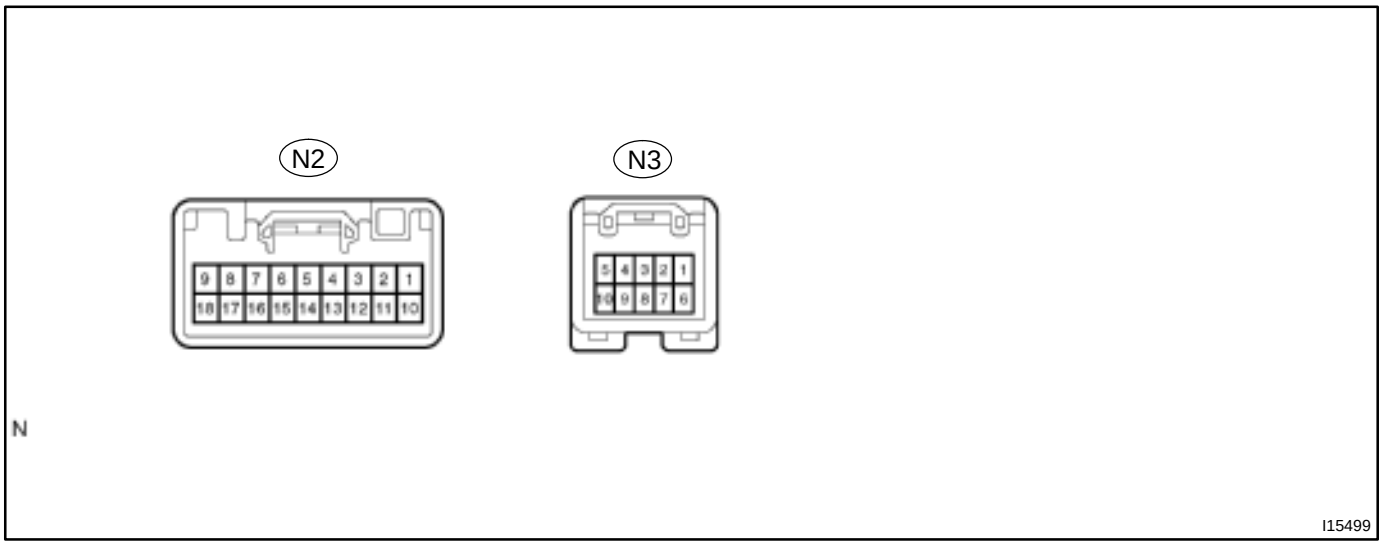

Symbols (Terminals NO.)	Condition	STD Voltage (V)	Problem symptom when open circuit is detected. / Problem symptom when short circuit is detected.
AUI+ – GND (N2–1 – N2–17)	Radio switch ON	5 – 7 V	Driver's side speaker does not sound.
AUO+ – GND (N2–2 – N2–17)	Radio switch ON	5 – 7 V	Driver's side speaker does not sound.
SPD – GND (N2–5 – N2–17)	Ignition switch ON and driving wheel rotated slowly	Repeatedly changes from below 1 to 9 V	Navigation operation is available during, or a cursor on present site does not move.
+B – GND (N2–9 – N2–17)	Constant	10 – 14 V	The set route can not be memorized. (The route disappears by turning the ignition switch OFF.)
			Fuse is blown.
AUI– – GND (N2–10 – N2–17)	Radio switch ON	5 – 7 V	Driver's side speaker does not sound.
AUO– – GND (N2–11 – N2–17)	Radio switch ON	5 – 7 V	Driver's side speaker does not sound.
REV – GND (N2–14 – N2–17)	A/T shift position R	5 V	The direction of advance of the vehicle is different from that of the cursor.
GND – Body ground (N2–17 – Body ground)	Constant	Below 1 V	Audio system is normal.
ACC – GND (N2–18 – N2–17)	Ignition switch ACC or ON	10 – 14 V	Audio system does not sound.
VR – VG (N3–1 – N3–6)	Constant	Continuity	Screen noise or other types of noise occur.
			Navigation system does not operation.
R – VG (N3–2 – N3–6)	Diagnosis display check screen is white (Using an oscilloscope)	0.7 V ± 0.1 V*1	Screen color turns to blue.

+B – GND (N3–3 – N2–17)	Constant	10 – 14 V	The set route can not be memorized. (The route disappears by turning the ignition switch OFF.)
			Fuse is blown.
B – VG (N3–3 – N3–6)	Diagnosis display check screen is white (Using an oscilloscope)	0.7 ± 0.1 V*2	Screen color turns to yellow.
TX1+ – GND (N3–5 – N2–17)	Ignition switch ACC or ON	2 – 3 V	Navigation system does not operate.
VG – GND (N3–6 – N2–17)	Constant	Continuity	Screen noise or other types of noise occur.
			Navigation system does not operation.
G – VG (N3–7 – N3–6)	Diagnosis display check screen is white (Using an oscilloscope)	0.7 ± 0.1 V*2	Screen color turns to red–purple.
SYNC – VG (N3–8 – N3–6)	Display ON (Using an oscilloscope)	0.5 – 1.3 V*1	Screen is in disorder.
TX1– – GND (N3–10 – N2–17)	Ignition switch ACC or ON	2 – 3 V	Navigation system does not operate.

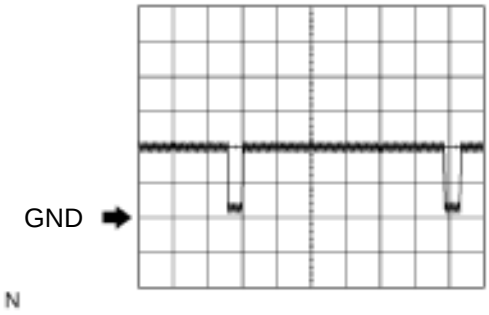

Oscilloscope

*1: wave1

- Measure terminal: SYNC ↔ GND1
- Measure set: 500 mV/DIV 10 µs/DIV
- Condition: Navigation display is displayed

I15531

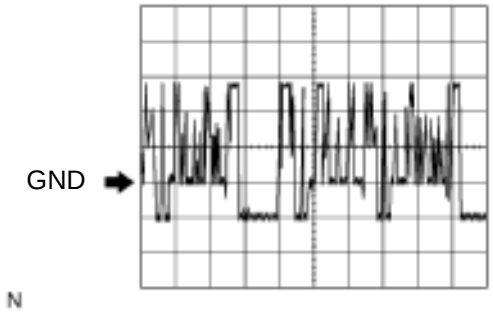

*2: wave2

- Measure terminal: R, G, B ↔ GND1
- Measure set: 200 mV/DIV 10 µs/DIV
- Condition: Navigation map is switched

I15532

3. No navigation screen displayed when ”MAP”, ”Menu”, or ”DEST” switch pressed. (Screen cannot be switched.)

INSPECTION PROCEDURE

1	**Service check mode. (Check the navigation ECU)**

NG → **Troubleshoot for each diagnosis.**

OK → **Go to step 6.**

Ncon

2	**Check the navigation ECU.**

PREPARATION:
Disconnect the navigation ECU connector.
CHECK:
Check voltage terminals +B.
OK:
+B: 10 – 14 V
CHECK:
Check voltage terminal ACC when turn ignition switch ACC or ON position.
OK:
ACC: 10 – 14 V
CHECK:
Check continuity terminal GND.
OK:
GND: Continuity

NG → **Replace or repair wire harness or connector.**

OK

3	**Check the navigation ECU.**

CHECK:
Check terminal R, G and B.
OK:
R, G, B: See ”Naavigation ECU” of ”TERMINAL OF ECU”.

NG → **Replace the navigation ECU.**

OK

4	**Check the multi display.**

PREPARATION:
Disconnect the multi display connector.
CHECK:
Check voltage terminals +B.
OK:
+B: 10 – 14 V
CHECK:
Check voltage terminal ACC when turn ignition switch ACC or ON position.
OK:
ACC: 10 – 14 V
CHECK:
Check continuity terminal GND.
OK:
GND: Continuity

NG → **Replace or repair wire harness or connector.**

OK

5	**Check the multi display.**

CHECK:
Check terminal R, G and B.
OK:
R, G, B: See ”multi display” of ”TERMINAL OF ECU”.

NG → **Replace the multi display.**

OK

Replace the multi display.

6	**All of the switches (MAP, Menu, DEST etc.) does not function.**

No → **Replace the center cluster module control.**

Yes

7	**Check each switch (A/C switch e.t.c.) of the center cluster module control does not function.**

No → **Replace the center cluster module control.**

Yes

Replace the multi display.

5. No navigation displayed, ”Audio OFF” on audio screen and no audio sound.

INSPECTION PROCEDURE

1	**Service check mode.**

NG → **Troubleshoot for each diagnosis.**

OK

2	**Check the radio receiver assembly.**

PREPARATION:
Disconnect the radio receiver assembly connector.
CHECK:
Check voltage terminals +B.
OK:
+B: 10 – 14 V
CHECK:
Check voltage terminal ACC when turn ignition switch ACC or ON position.
OK:
ACC: 10 – 14 V
CHECK:
Check continuity terminal GND.
OK:
GND: Continuity

NG → **Replace or repair wire harness.**

OK

3	**Check ”AVC–LAN communication circuit” (See page DI–860).**

NG → **Replace the AVC–LAN circuit or radio receiver assembly.**

OK

Replace the multi display.

DI7OZ–01

6. Screen cannot be dimmed in night time.

INSPECTION PROCEDURE

1	**Check if the screen is dimmed at night. (With the light control switch ON), do all screens except the navigation screen appear in Night Mode?)**

NG → **Check the light control switch.**

OK

2	**Check the multi display.**

CHECK:
Check terminal TAIL.
OK:
TAIL: See ”Multi display” of ”TERMINAL OF ECU”.

NG → **Replace or repair wire harness.**

OK

3	**Check the multi display.**

PREPARATION:
Disconnect the multi display connector.
CHECK:
Check voltage terminals +B.
OK:
+B: 10 – 14 V
CHECK:
Check voltage terminal ACC when turn ignition switch ACC or ON position.
OK:
ACC: 10 – 14 V
CHECK:
Check continuity terminal GND.
OK:
GND: Continuity

NG → **Replace or repair wire harness.**

OK

Replace the multi display.

8. Color on navigation screen is unusual (RGB signal error).

INSPECTION PROCEDURE

1	Display check mode (Color bar check).

NG → Replace the multi display.

2	Navigation check mode (Color bar check).

NG → Go to step 4.

OK

3	Check the screen setting. (Day or Night mode)

OK → Normal.

NG

4	Check the navigation ECU.

CHECK:
Check terminals +B.
OK:
+B: 10 – 14 V
CHECK:
Check terminal ACC when turn ignition switch ACC or ON position.
OK:
ACC: 10 – 14 V
CHECK:
Check terminal R, G, B, VR or VG.
OK:
R, G, B, VR or VG: See ”Navigation ECU” of ”TERMINAL OF ECU”

NG → Replace the wire harness when all terminals are faulty. Replace the wire harness when SYNC terminal is faulty.

OK

Replace the multi display.

11. No sound (radio, cassette tape, CD) can be heard from driver side door speaker only.

INSPECTION PROCEDURE

1	**Service check mode.**

NG → **Troubleshoot for each diagnosis.**

OK

2	**Check wire harness (between navigation ECU and radio receiver assembly).**

PREPARATION:

Disconnect the navigation ECU and radio receiver assembly connector.

CHECK:

(a) Check continuity between terminal AUI+ of navigation ECU connector and terminal FL+ of radio receiver assembly.

(b) Check continuity between terminal AUI– of navigation ECU connector and terminal FL– of radio receiver assembly.

OK:

Continuity

NG → **Replace or repair wire harness.**

OK

3	**Check the navigation system voice.**

OK → **Go to step 6.**

NG

4	**Check wire harness (between navigation ECU and driver side door speaker).**

PREPARATION:

Disconnect the navigation ECU and driver side door speaker connector.

CHECK:

(a) Check continuity between terminal AUO+ of navigation ECU connector and terminal 1 of driver side door speaker.

(b) Check continuity between terminal AUO– of navigation ECU connector and terminal 2 of driver side door speaker.

OK:

Continuity

NG → **Replace or repair wire harness.**

OK

5	**Check the driver side door speaker.**

NG → **Replace the speaker.**

OK

Replace the navigation ECU.

6	**Check the navigation ECU.**

CHECK:

Check terminal AUO+, AUO–, AUI+ and AUI–.

OK:

AUO+, AUO–, AUI+ and AUI–: See ”Navigation ECU” of ”TERMINAL OF ECU”.

NG → **Replace the navigation ECU.**

OK

Replace the radio receiver assembly.

DI7P5–01

12. Map DISC cannot be inserted.

INSPECTION PROCEDURE

1	**Check the MAP DISC.**

NG → **Replace the MAP DISC.**

OK

2	**Insert a MAP DISC without tilt.**

OK → **Normal.**

NG

3	**Check the navigation ECU.**

PREPARATION:
Disconnect the navigation ECU connector.
CHECK:
Check voltage terminals +B.
OK:
+B: 10 – 14 V
CHECK:
Check voltage terminal ACC when turn ignition switch ACC or ON position.
OK:
ACC: 10 – 14 V
CHECK:
Check continuity terminal GND.
OK:
GND: Continuity

NG → **Replace or repair wire harness.**

OK

Replace the navigation ECU.

DI7P8–01

15. Navigation screen cannot change to the night mode color.

INSPECTION PROCEDURE

1	Check the setting. (Is it set to Day Mode in screen adjustment?)

Yes → Normal.

No

2	Check if the screen is dimmed at night. (With the light control switch ON, do all screens except the navigation screen appear in Night Mode?)

NG → Go to step 5.

OK

3	Does the beep sound by operating switches on the navigation screen?

OK → Replace the navigation ECU.

NG

4	Check ”AVC–LAN communication circuit” (See page DI–860).

NG → Replace or repair AVC–LAN circuit.

OK

Replace the navigation ECU.

5	**Check the multi display.**

CHECK:

Check terminal TAIL.

OK:

TAIL: See ”Multi Display” of ”TERMINAL OF ECU”.

OK → **Replace the multi display.**

NG

Replace or repair wire harness.

DI7PA–01

17. Vehicle position is deviated from correct point badly.

INSPECTION PROCEDURE

1	Check the mark display. (At a place with a fine view, is GPS mark displayed or not?)

No → Go to step 7.

Yes

2	Does the trouble occur in the specific area or not?

Yes → Normal. (If the vehicle is positioned in the place where it is difficult to be identified, the current vehicle position may be incorrectly displayed.)

No

3	Check the setting (Color of the automatic calibration button on the calibration screen).

Green → Normal. (Drive the vehicle (10 km or more) until calibration is completed.

Blue

4	Service check mode. (Is ”58–43” displayed in the unit check mode of the navigation ECU?)

Yes → Troubleshoot for each diagnosis.

No

5	**Navigation check mode (vehicle signal check mode: SPD).**

NG → **Replace or repair speed sensor wire harness.**

OK

6	**Recurrence Test (Confirm the phenomenon) (Correct the current position and drive the vehicle for a while with the GPS mark displayed).**

OK → **Normal.**

NG

Replace the navigation ECU.

7	**Check if the harness is caught or sharply bent or not.**

NG → **Navigation antenna is surely connected.**

OK

8	**Check optional components. (Does it become if the optionals such as the theft deterrent system is removed?)**

Yes → **Remove or change the position of the components.**

HINT:
Some optionals receive radio signals, and if this happens, GPS reception may be affected.

No

9	**Is there anything such as a film stuck to the window?**

Yes → **Reception may be affected by a screen such as a film.**

No

10	**Service check mode. (Is ”80–40, 41” is displayed in the unit check mode of the navigation ECU?)**

Yes → **Troubleshoot for each diagnosis.**

No

Replace the navigation antenna.

HINT:
If the trouble still occurs, replace the navigation ECU.

DI7PB–01

18. GPS mark does not appear.

INSPECTION PROCEDURE

1	**Check the mark display. (At a place with a fine view, is GPS mark displayed or not?)**

Yes → **Normal.**

No

2	**Check if the harness is caught or sharply bent or not.**

NG → **Navigation antenna is surely connected.**

OK

3	**Check optional components. (Does it become normal if the optionals such as the theft deterrent system is removed?)**

Yes → **Remove or change the position of the components.**

HINT:
Some optionals receive radio signals, and if this happens, GPS reception may be affected.

No

4	**Is there anything such as a film stuck to the window?**

Yes → **Reception may be affected by a screen such as a film.**

No

5	**Service check mode. (Is ”80–40, 41” is displayed in the unit check mode of the navigation ECU?)**

Yes → **Troubleshoot for each diagnosis.**

No

Replace the navigation antenna.

HINT:
If the trouble still occurs, replace the navigation ECU.

20. Vehicle position rotates without control. (Map rotates without control)

INSPECTION PROCEDURE

1	Recheck. (While not rotating the vehicle, turn the ignition switch ON from OFF again.)

OK → Normal. (While the vehicle was turning, the ignition switch was turned ON.)

NG

2	System check mode. (Is ”58–10” is displayed in the unit check mode of the navigation ECU?)

Yes → Replace the navigation ECU.

No

3	System check mode. (Is ”58–43” is displayed in the unit check mode of the navigation ECU?)

Yes → Replace and repair SPD terminal wire harness.

No

4	Navigation check mode (vehicle signal check mode: SPD and gyro).

OK → Replace the navigation ECU.

NG

Replace or repair wire harness.

DI7PK–01

27. No AM, FM or CD screen is displayed.

INSPECTION PROCEDURE

1	**Check the sound. (Check if the sound of the radio, cassette or CD can be heard.)**

OK → **System check mode. (Check radio receiver assembly)**

NG

2	**Check the radio receiver assembly.**

PREPARATION:
Disconnect the radio receiver assembly connector.
CHECK:
Check voltage terminals +B.
OK:
+B: 10 – 14 V
CHECK:
Check voltage terminal ACC when turn ignition switch ACC or ON position.
OK:
ACC: 10 – 14 V
CHECK:
Check continuity terminal GND.
OK:
GND: Continuity

NG → **Replace or repair wire harness.**

OK

3	Check ”AVC–LAN communication circuit” (See page DI–860).

NG → Replace or repair AVC–LAN circuit.

OK →

Replace the radio receiver assembly.

DI7PL–01

AVC–LAN (Communication bus) Circuit

CIRCUIT DESCRIPTION

Each unit of navigation system connected with AVC–LAN (communication bus) transfers the signal of each switch by communication.
When +B short and GND short occur in this AVC–LAN, navigation system will not function normally as the communication is discontinued.
In this AVC–LAN, multi display becomes the master of the communication, and the radio receiver assembly has a terminator necessary for transmitting the communication.
multi display is connected between navigation ECU and radio receiver assembly, navigation system has the structure that makes communication impossible without navigation ECU, multi display or radio receiver assembly.

AVC–LAN

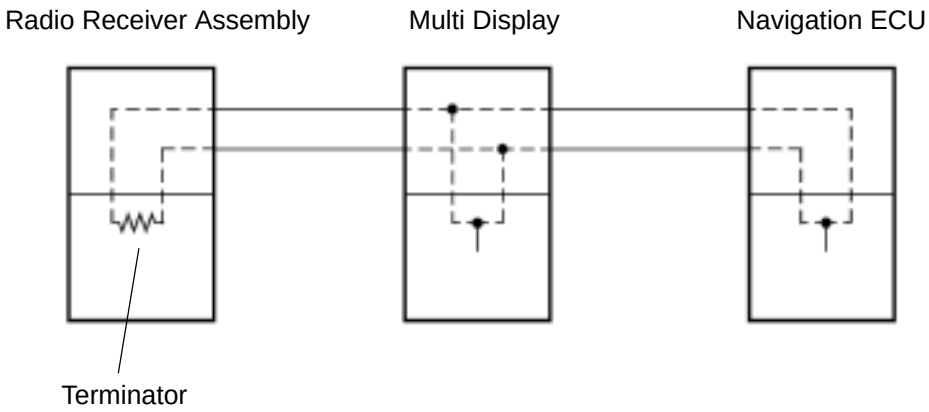

N

I11572

WIRING DIAGRAM

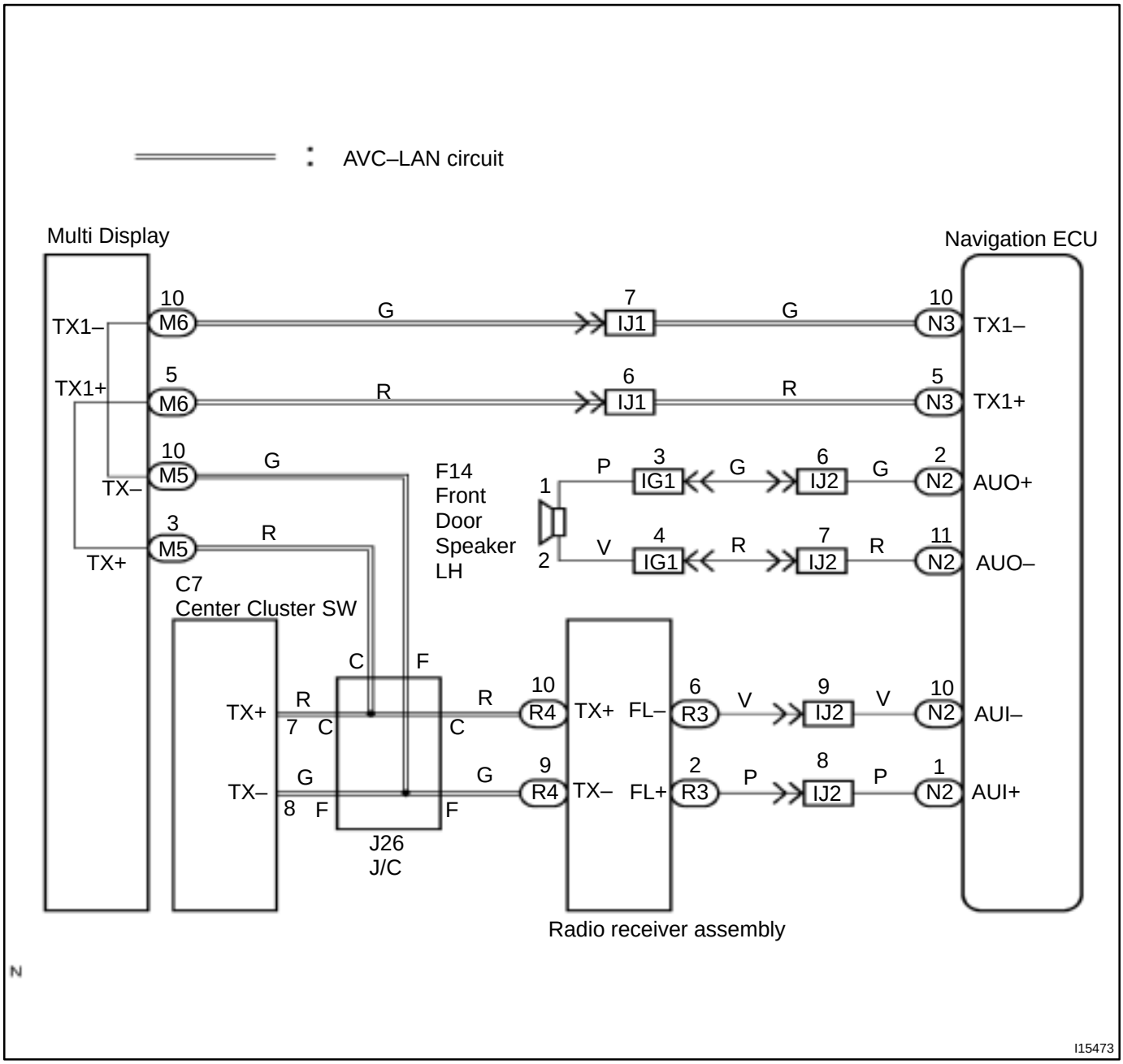

INSPECTION PROCEDURE

1	**Check wire harness and connector between radio receiver assembly and navigation ECU (See page IN–41).**

NG → **Repair or replace wire harness or connector between radio receiver assembly and navigation ECU.**

OK

2	**Check wire harness and connector between multi display and navigation ECU (See page IN–41).**

NG → **Repair or replace wire harness or connector between multi display and navigation ECU.**

OK

3	Skip radio receiver assembly and check AVC–LAN.

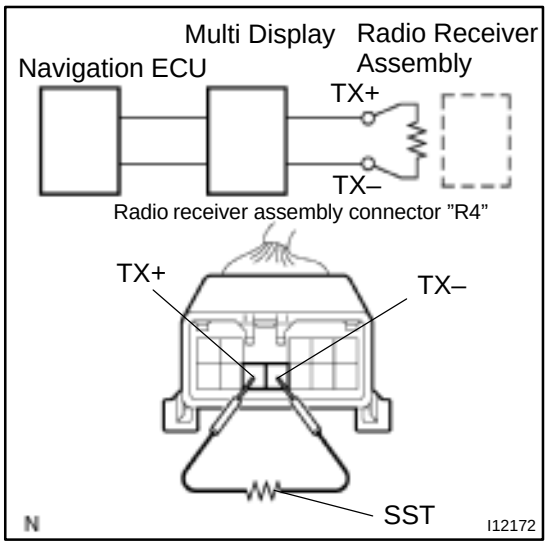

PREPARATION:

(a) Connect Multi Display connector.
(b) Disconnect radio receiver assembly ”R4” connector.
(c) Using SST (Navigation Check Wire P/N 09843–18050), connect the terminal TX+ to terminal TX– of ”R4” connector of radio receiver assembly.

CHECK:

Operate the panel switch and the touch switch of the display and check that the navigation functions.
(Check that AVC–LAN is recovered.)

OK → **Replace the radio receiver assembly.**

NG

Replace the Navigation ECU.

DI7S1–01

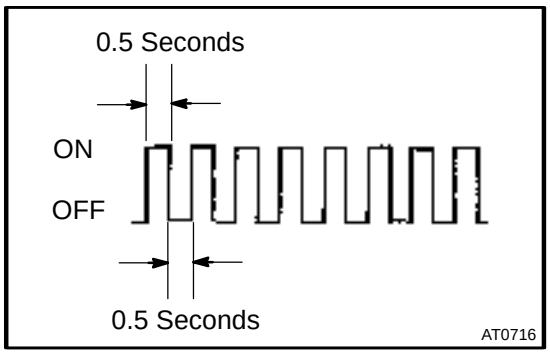

PRE–CHECK

1. WARNING FOR A/C COMPRESSOR LOCK

If compressor lock occurs during A/C operation, the A/C switch indicator on the A/C control assembly starts blinking.
When this occurs, check for compressor lock (DTC 22) using diagnosis trouble code check then proceed to inspect the circuit or the component.
Compressor lock sensor circuit. → (See page DI–891)

2. LIST OF OPERATION METHODS

By operating each of the A/C control switches as shown in the diagram below, it is possible to enter the diagnosis check mode.

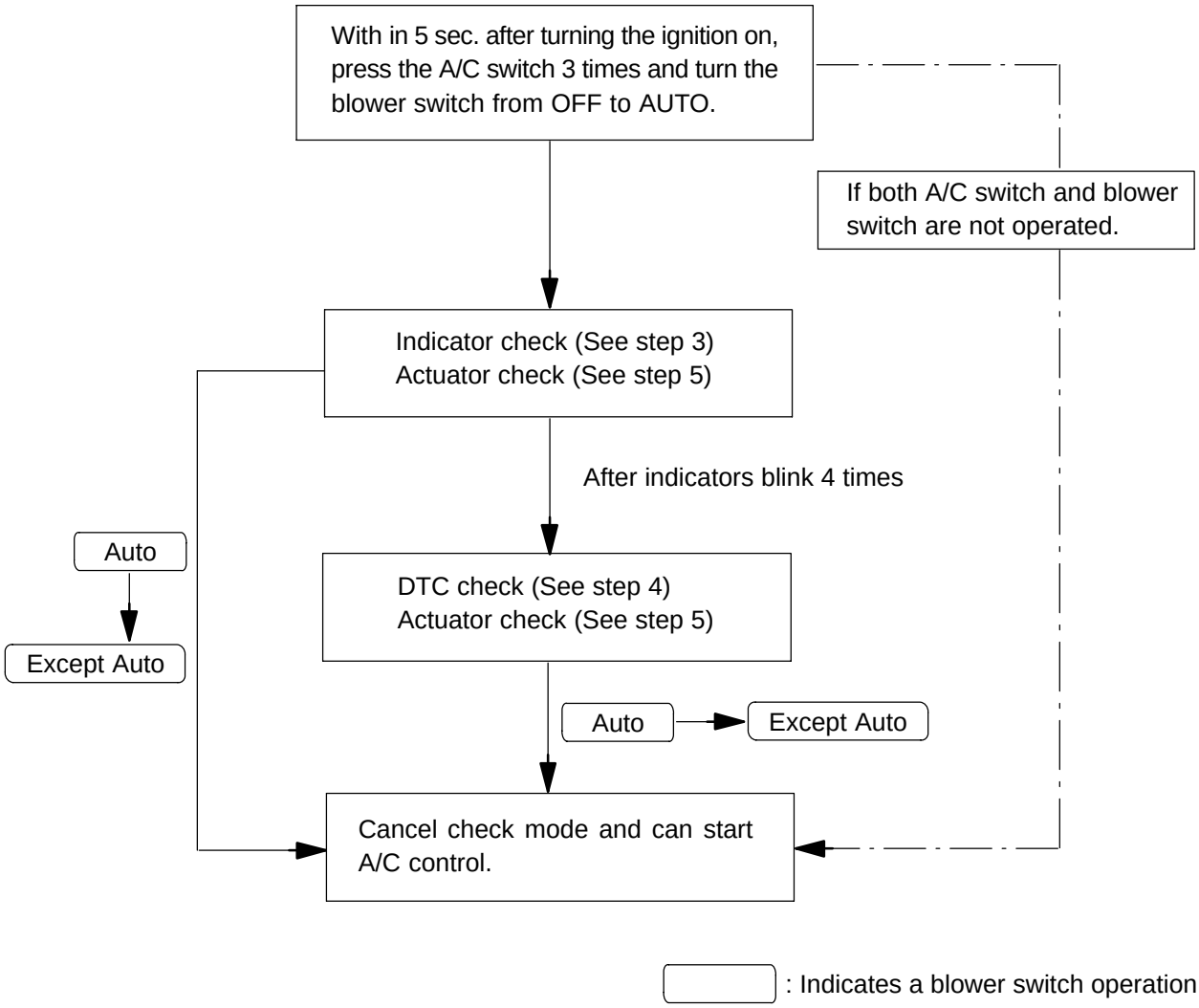

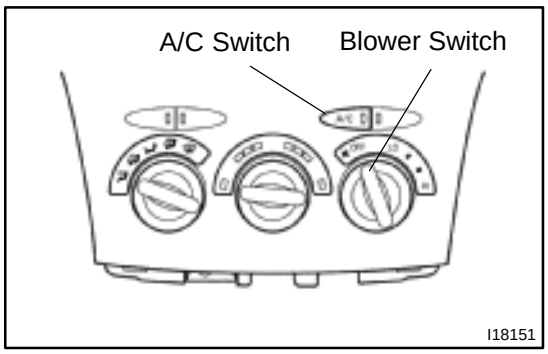

3. INDICATOR CHECK

(a) Within 5 sec. after turning the ignition switch on, press the A/C switch 3 times and turn the blower switch from OFF to AUTO.

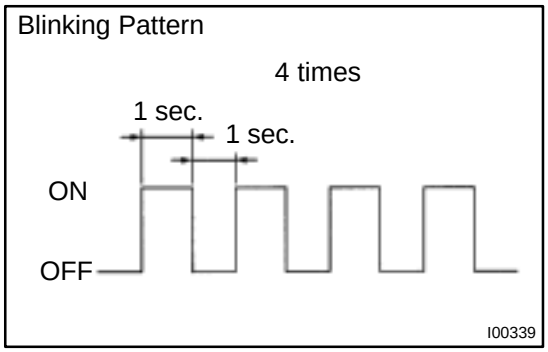

(b) Check that all the indicators light up and go off at 1 second intervals 4 times in succession.

HINT:

- After the indicator check is ended, the system enters the DTC begins automatically.
- Operate the blower switch from AUTO to except AUTO position when desiring to cancel the check mode.

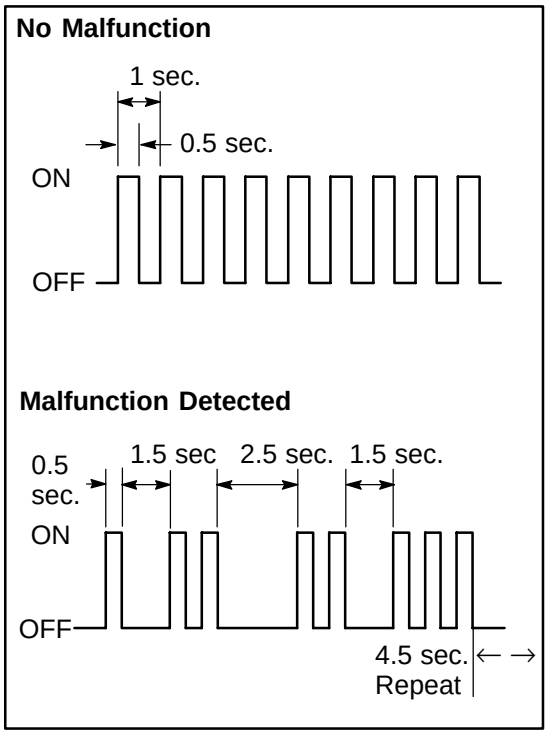

4. DTC CHECK (SENSOR CHECK)

(a) Perform an indicator check. After the indicator check is completed, the system enters the DTC check mode automatically.

(b) Read the DTC as indicated by the number of blinks of the A/C indicator.

HINT:

The illustration shows the blinking pattern associated with the DTC 12 and 23. If 2 or more DTCs (abnormalities) are indicated, the lowest number (code) is output first.

(c) Identify the problem using the chart of the DTC.

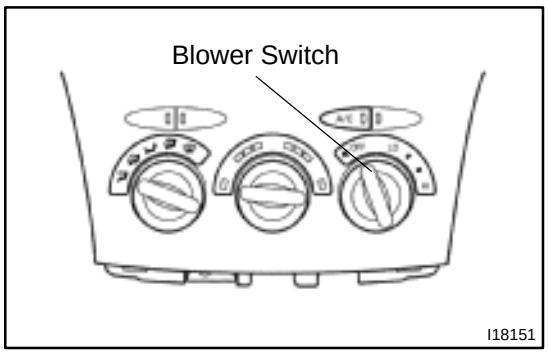

5. ACTUATOR CHECK

(a) Actuator check mode is started at the same time with DTC check mode.

(b) Check visually on by hand that the air flow, amount of damper operating and operation of the compressor changes according to the set temperature of the A/C control panel, as shown in the chart.

HINT:

To cancel the check mode, turn blower switch from AUTO to except AUTO.

Step No.	Temp. setting ˚C (˚F)	Blower Level	Air Mix Damper	Air Inlet Damper	Air Outlet Damper	Compressor
1	Max. Cool ↔ 20.5 (66)	4	–10 % (Cool)	REC (–1 %)	FACE (–10 %)	ON
2	21.0 ↔ 23.5 (67 ↔ 72)	↑	↑	R/F (82.0 %)	B/L (15 %)	↑
3	24.0 ↔ 26.0 (73 ↔ 77)	17	50 % (Cool/Warm)	R/F (102.0 %)	FOOT (50 %)	OFF
4	26.5 ↔ 29.0 (78 ↔ 83)	↑	↑	FRS (110.0 %)	DEF (110 %)	↑
5	29.5 (84) ↔ Max. Warm	31	100 % (Warm)	FRS (110.0 %)	F/D (90 %)	↑

DI7S2–01

DIAGNOSTIC TROUBLE CODE CHART

DTC No. (See Page)	Detection Item	Trouble Area
11*1 (DI–876)	Room temp. sensor circuit	• Room temp. sensor • Harness or connector between room temp. sensor and A/C amplifier • A/C amplifier
12*2 (DI–879)	Ambient temp. sensor circuit	• Ambient temp. sensor • Harness and connector between ambient temp. sensor and ECM • ECM • Harness and connector between ECM and A/C amplifier • A/C amplifier
13 (DI–882)	Evaporator temp. sensor circuit	• Evaporator temp. sensor • Harness and connector between evaporator temp. sensor and A/C amplifier • A/C amplifier
14 (DI–885)	Engine coolant temp. sensor circuit	• Water temp. sensor • Harness and connector between engine coolant temp. sensor and ECM • ECM • Harness and connector between ECM and A/C amplifier
21*3 (DI–888)	Solar sensor circuit	• Solar sensor • Harness or connector between room temp. sensor and A/C amplifier • A/C amplifier
22*4 (DI–891)	All conditions below are detected for 3 sec. or more (g) Engine speed: 500 rpm or more (h) Ratio between engine and compressor rpm deviates 20 % or more in comparison to normal operation	• Compressor drive belt • Compressor lock sensor • Compressor • Harness and connector between compressor lock sensor and A/C amplifier
23 (DI–894)	Open in pressure switch circuit Abnormal refrigerant pressure [below 196 kPa (2.0 kgf/cm^2, 28 psi) over 3,140 kPa (32.0 kgf/cm^2, 455 psi)]	• Pressure switch • Harness or connector between pressure switch and A/C amplifier • A/C amplifier
31 (DI–897)	Air mix damper position sensor circuit	• Air mix control servomotor • Harness or connector between air mix control servomotor and A/C amplifier • A/C amplifier
32 (DI–900)	Air inlet damper position sensor circuit	• Air inlet control servomotor • Harness or connector between air inlet control servomotor and A/C amplifier • A/C amplifier
33 (DI–903)	Air outlet damper position sensor circuit	• Air outlet control servomotor • Harness or connector between air outlet control servomotor and A/C amplifier • A/C amplifier
41 (DI–906)	Air mix control servomotor circuit	• Air mix control servomotor • Air mix damper position sensor • Harness or connector between air mix control servomotor and A/C amplifier • A/C amplifier

42 (DI–909)	Air inlet control servomotor circuit	• Air inlet control servomotor • Air inlet damper position sensor • Harness or connector between air inlet control servomotor and A/C amplifier • A/C amplifier
43 (DI–912)	Air outlet control servomotor circuit	• Air outlet control servomotor • Air outlet damper position sensor • Harness or connector between air outlet control servomotor and A/C amplifier • A/C amplifier

HINT:

- *1: If the room temp. is approx. –18.6˚C (–3.7˚F) or lower, trouble code 11 may be output even though the system is normal.
- *2: If the ambient temp. is approx. –52.9˚C (–61.4˚F) or lower, a malfunction code may be output even though the system is normal.
- *3: If the check is being performed in a dark place, DTC 21 (solar sensor circuit abnormal) could be displayed.
- *4: To confirm DTC 22, perform the following steps.
  (1) With the engine is running, enter the DTC check mode.
  (2) Enter actuator check mode and set the operation to step NO. 1.
  (3) Check that the DTC 22 is output.

DI7S4–01

TERMINALS OF ECU

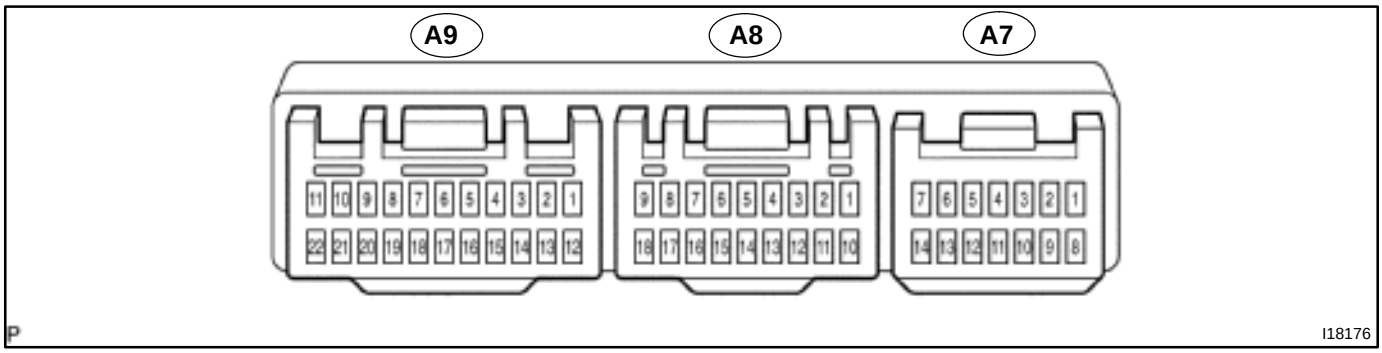

Symbols (Terminals No.)	Wiring Color	Condition	STD Voltage (V)
IG ↔GND (A7–1 ↔ A7–7)	R ↔ W–B	IG ON.	10 – 14
BLW ↔ GND (A7–3 ↔ A7–7)	V ↔ W–B	IG ON. Blower motor: Operate	Pulse generation
MP2+ ↔ GND (A7–4 ↔ A7–7)	GR–B ↔ W–B	IG ON.	Pulse generation
GND ↔ Body ground (A7–7 ↔ Body ground)	W–B ↔ Body ground	Always	Continuity
+B ↔ GND (A7–8 ↔ A7–7)	R–G ↔ W–B	Always	10 – 14
IDH ↔ GND (A8–10 ↔ A7–7)	Y ↔ W–B	IG ON. Head lamp: ON Rear defogger: ON Set temp.: MAX. HOT	10 – 14
		IG ON. Head lamp: OFF Rear defogger: OFF	Below 1.0
MPX+ ↔ GND (A7–11 ↔ A7–7)	GR ↔ W–B	IG ON.	Pulse generation
RF ↔ GND (A8–1 ↔ A7–7)	R–W ↔ W–B	Start engine. Water temp.: Below 90˚C Refrigerant pressure: Below 1,520 kPa	10 – 14
		Start engine. Water temp.: Approx. 90˚C Refrigerant pressure: Above 1,520 kPa	Below 1.0
CF ↔ GND (A8–2 ↔ A7–7)	V–Y ↔ W–B	Start engine. A/C compressor: ON	Below 1.0
		Start engine. A/C compressor: OFF	10 – 14
WP ↔ GND (A8–3 ↔ A7–7)	L–R ↔ W–B	Engine speed: Above 500 rpm Blower motor: Operate	Below 1.0
		Engine speed: Above 500 rpm Blower motor: Not operate	10 – 14
NE ↔ GND (A8–4 ↔ A7–7)	LG ↔ W–B	Start engine	Pulse generation
ACT ↔ GND (A8–5 ↔ A7–7)	P–G ↔ W–B	Engine speed: Idle speed	10 – 14
HTR0 ↔ GND (A8–6 ↔ A7–7)	P–B ↔ W–B	Start engine Head lamp: OFF Rear defogger: OFF Set temp.: MAX. WARM Blower mode dial: HI Mode selector: F/D Water temp.: Below 55 ˚C	Below 0.7

LOCk ↔ SGLOCK (A8–9 ↔ A7–18)	W–L ↔ BR–W	Start engine. A/C compressor ON.	Pulse generation
MGC ↔ GND (A8–11 ↔ A7–7)	LG–R ↔ W–B	Start engine. A/C compressor: ON	Below 1.0
		Start engine. A/C compressor: OFF	10 – 14
PSW ↔ GND (A8–11 ↔ A7–7)	L–Y ↔ W–B	A/C refrigerant pressure: less than 0.19 Mpa (2.0 kgf/cm^2) or more than 3.14 Mpa (3,140 kgf/cm^2)	From 10 – 14 to Below 1.0
HTR2 ↔ GND (A8–13 ↔ A7–7)	P ↔ W–B	Start engine Head lamp: OFF Rear defogger: OFF Set temp.: MAX. WARM Blower mode dial: HI Mode selector: F/D Water temp.: 55 – 70˚C	Below 0.7
SGLOCK ↔ GND (A8–18 ↔ A7–7)	BR–W ↔ W–B	Always	Continuity
TE ↔ SGTE (A9–1 ↔ A9–2)	W ↔ W	IG ON. Ambient temp. 25˚C (77˚F)	1.35 – 1.75
		IG ON. Ambient temp. 40˚C (104˚F)	0.85 – 1.25
SGTE ↔ GND (A9–2 ↔ A7–7)	W ↔ W–B	Always	Continuity
SGTR ↔ GND (A9–3 ↔ A7–7)	W ↔ W–B	Always	Continuity
TR ↔ SGTR (A9–4 ↔ A9–3)	W ↔ W	IG ON. Room temp. 25˚C (77˚F)	1.8 – 2.2
		IG ON. Room temp. 40˚C (104˚F)	1.2 – 1.6
TS ↔ S5TS (A9–5 ↔ A9–6)	W ↔ W	IG ON. Solar sensor subject to electric light	1.0 or more
		IG ON. Solar sensor cover by a cloth	Below 1.0
S5TS ↔ GND (A9–6 ↔ A7–7)	W ↔ W–B	IG ON.	4.5 – 5.5
S5TPM ↔ SGTPM (A9–7 ↔ A9–9)	W ↔ W	IG ON.	4.5 – 5.5
TPM ↔ SGTPM (A9–8 ↔ A9–9)	W ↔ W	IG ON. Mode selector: FACE	Below 1.0
		IG ON. Mode selector: DEF	4.5 – 5.5
SGTPM ↔ GND (A9–9 ↔ A7–7)	W ↔ W–B	Always	Continuity
AOF ↔ GND (A9–10 ↔ A7–7)	W ↔ W–B	IG ON. Mode selector: FACE	10 – 14
		IG ON. Mode selector: DEF	Below 1.0
AOD ↔ GND (A9–11 ↔ A7–7)	W ↔ W–B	IG ON. Mode selector: FACE	Below 1.0
		IG ON. Mode selector: DEF	10 – 14
AMH ↔ GND (A9–13 ↔ A7–7)	W ↔ W–B	IG ON. Set temp.: Max. COOL	10 – 14
		IG ON. Set temp.: Max. WARM	Below 1.0
AMC ↔ GND (A9–14 ↔ A7–7)	W ↔ W	IG ON. Set temp.: Max. COOL	Below 1.0
		IG ON. Set temp.: Max. WARM	10 – 14
SGTP ↔ GND (A9–15 ↔ A7–7)	W ↔ W–B	Always	Continuity
TP ↔ SGTP (A9–16 ↔ A9–15)	W ↔ W	IG ON. Set temp.: Max. COOL	Below 1.0
		IG ON. Set temp.: Max. WARM	4.5 – 5.5
S5TP ↔ SGTP (A9–17 ↔ A9–15)	W ↔ W	IG ON.	4.5 – 5.5
S5TPI ↔ SGTPI (A9–18 ↔ A9–20)	W ↔ W	IG ON.	4.5 – 5.5

TPI ↔ SGTPI (A9–19 ↔ A9–20)	W ↔ W	IG ON. Air intake selector: FRESH	Below 1.0
		IG ON. Air intake selector: RECIRCULATE	4.5 – 5.5
SGTPI ↔ GND (A9–20 ↔ A7–7)	W ↔ W–B	Always	Continuity
AIR ↔ GND (A9–21 ↔ A7–7)	W ↔ W–B	IG ON. Air intake selector: FRESH	Below 1.0
		IG ON. Air intake selector: RECIRCULATE	10 – 14
AIF ↔ GND (A9–22 ↔ A7–7)	W ↔ W–B	IG ON. Air intake selector: FRESH	10 – 14
		IG ON. Air intake selector: RECIRCULATE	Below 1.0

DI7S3–01

PROBLEM SYMPTOMS TABLE

Symptom	Suspect Area	See page
Whole function of the does not operate	3. A/C amplifier 4. IG power source circuit	IN–41 DI–916
Air Flow Control: No blower operation	1. IG power source circuit 2. Heater main relay circuit 3. Blower motor circuit 4. A/C amplifier	DI–916 DI–921 DI–924 IN–41
Air Flow Control: No blower control	1. Heater main relay circuit 2. Blower motor circuit 3. A/C amplifier	DI–921 DI–924 IN–41
Air Flow Control: Insufficient air flow	1. Blower motor circuit	DI–924
Temperature Control: No cool air comes out	1. Refrigerant volume 2. Drive belt tension 3. Refrigeration system inspection with manifold gauge set 4. Compressor circuit 5. Pressure switch circuit 6. Compressor lock sensor circuit 7. Air mix damper position sensor circuit 8. Air mix damper control servomotor circuit 9. Room temperature sensor circuit 10.Ambient temperature sensor circuit 11.A/C amplifier	AC–3 AC–15 AC–3 DI–927 DI–894 DI–891 DI–897 DI–906 DI–874 DI–879 IN–41
Temperature Control: No warm air comes out	1. Air mix damper position sensor circuit 2. Air mix damper control servomotor circuit 3. DC/DC converter circuit 4. PTC heater circuit 5. Room temperature sensor circuit 6. Ambient temperature sensor circuit 7. Evaporator temperature sensor circuit 8. A/C amplifier	DI–897 DI–906 DI–934 DI–937, DI–942 DI–876 DI–882 DI–885 IN–41
Temperature Control: Output air is warmer or cooler that the set temperature or response is slow	1. Refrigerant volume 2. Drive belt tension 3. Refrigeration system inspection with manifold gauge set 4. Radiator fan and condenser fan circuit 5. Solar sensor circuit 6. Room temperature sensor circuit 7. Ambient temperature sensor circuit 8. Evaporator temperature sensor circuit 9. Air mix damper position sensor circuit 10.Air mix damper control servomotor circuit 11.Evaporator 12.Heater radiator 13.Expansion valve 14.A/C amplifier	AC–3 AC–15 AC–3 DI–947 DI–888 DI–876 DI–879 DI–885 DI–897 DI–906 AC–28 AC–28 AC–52 IN–41
Temperature Control: No temperature control (only Max. cool or Max. warm)	1. Room temperature sensor circuit 2. Ambient temperature sensor circuit 3. Air mix damper position sensor circuit 4. Air mix damper control servomotor circuit 5. A/C amplifier	DI–876 DI–882 DI–897 DI–906 IN–41
No air inlet control	1. Air inlet damper position sensor circuit 2. Air inlet damper control servomotor circuit 3. A/C amplifier	DI–900 DI–909 IN–41

Engine idle up does not occur, or is continuous	1. Compressor circuit 2. A/C amplifier	DI–927 IN–41
Blinking of A/C indicator	1. Compressor lock sensor circuit 2. A/C amplifier	DI–891 IN–41

DI7S5–01

CIRCUIT INSPECTION

DTC	11	Room Temperature Sensor Circuit

CIRCUIT DESCRIPTION

This sensor detects the temperature inside the cabin and sends the appropriate signals to the A/C amplifier.

DTC No.	Detection Item	Trouble Area
11	Open or short in room temperature sensor circuit.	• Room temperature sensor. • Harness or connector between room temp. sensor and A/C amplifier. • A/C amplifier.

WIRING DIAGRAM

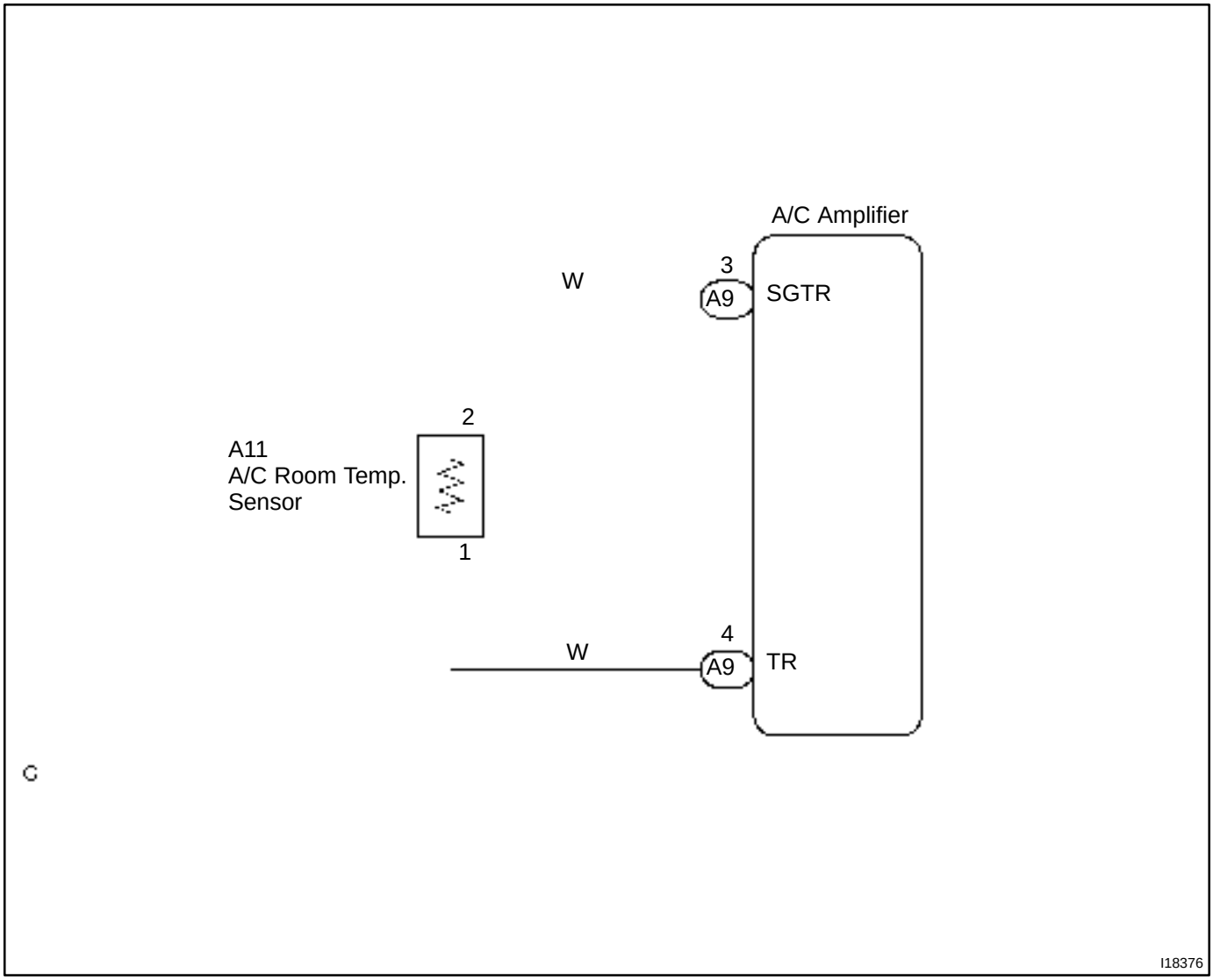

INSPECTION PROCEDURE

1	**Check voltage between terminals TR and SGTR of A/C amplifier connector.**

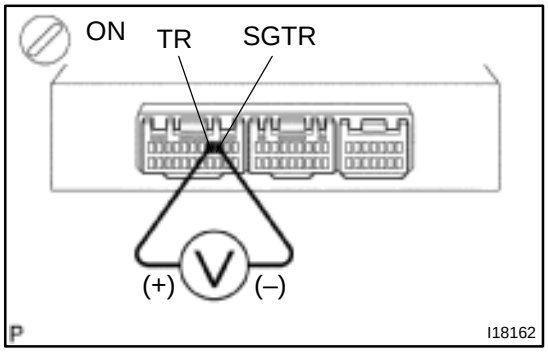

PREPARATION:

(a) Remove center cluster module control with connectors still connected.

(b) Turn the ignition switch ON.

CHECK:

Check voltage between terminals TR and SGTR of A/C amplifier connector at each temperature.

OK:

at 25 °C (77 °F) : 1.8 – 2.2 V

at 40 °C (104 °F) : 1.2 – 1.6 V

HINT:

As the temperature increases, the voltage decreases.

NG → **Go to step 2.**

OK

Proceed to next circuit inspection shown on problem symptoms table (See page DI–874). However, if DTC 11 is output, check and replace A/C amplifier.

2	**Check room temperature sensor.**

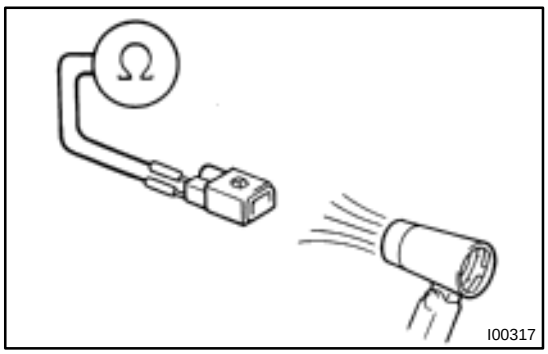

PREPARATION:

Remove room temperature sensor (See page AC–60).

CHECK:

Check resistance between terminals 1 and 2 of room temperature sensor connector at each temperature.

OK:

at 25 °C (77 °F) : 1.6 – 1.8 kΩ

at 40 °C (104 °F) : 0.5 – 1.7 kΩ

HINT:

As the temperature increases, the resistance decreases.

NG → **Replace room temperature sensor.**

OK

3	**Check harness and connector between A/C amplifier and room temperature sensor (See page IN–41).**

NG → **Repair or replace harness or connector.**

OK

Check and replace A/C amplifier.

DI7S6–01

DTC	12	Ambient Temperature Sensor Circuit

CIRCUIT DESCRIPTION

This sensor detects the ambient temperature and sends the appropriate signals to the A/C amplifier.

DTC No.	Detection Item	Trouble Area
12	Open or short in ambient temperature sensor circuit	• Ambient temperature sensor • Harness or connector between ambient temperature sensor and ECM • ECM • Harness or connector between ECM and A/C amplifier • A/C amplifier.

WIRING DIAGRAM

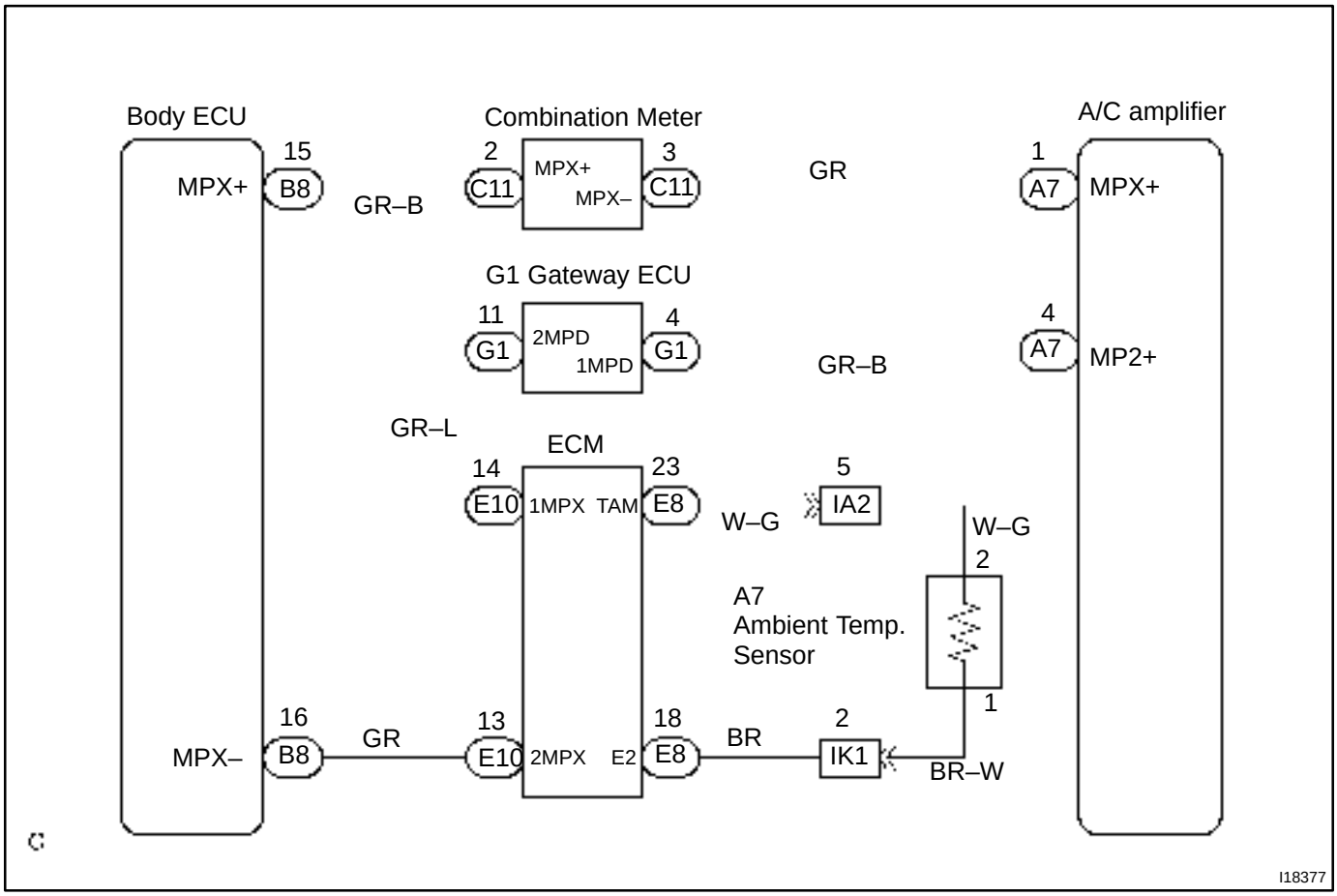

INSPECTION PROCEDURE

1	**Check voltage between terminals TAM and E2 of ECM connector.**

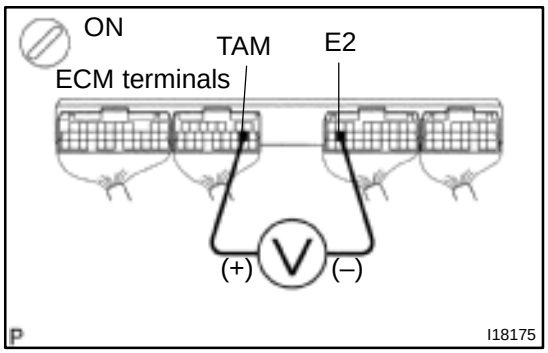

PREPARATION:

(a) Remove ECM with connectors still connected.

(b) Turn ignition switch ON.

CHECK:

Check voltage between terminals TAM and E2 of ECM connector at each temperature .

OK:

Voltage
at 25 °C (77 °F) : 1.35 – 1.75 V
at 40 °C (104 °F) : 0.85 – 1.25 V

HINT:

As the temperature increases, the voltage decreases.

NG → **Go to step 2.**

OK

Proceed to the next circuit inspection shown on problem symptoms table (See page DI–874). However, if DTC 12 is displayed, check and replace A/C amplifier.

2	Check ambient temperature sensor.

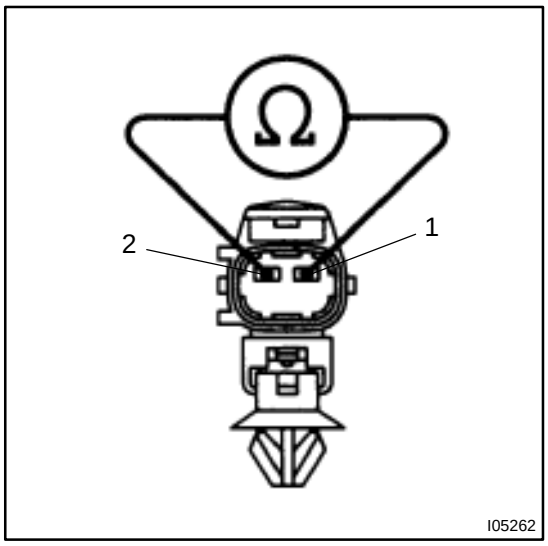

PREPARATION:
Disconnect ambient temperature sensor connector.
CHECK:
Check resistance between terminals 1 and 2 of ambient temperature sensor connector at each temperature.
OK:

Resistance
at 25 °C (77 °F) : 1.6 – 1.8 kΩ
at 40 °C (104 °F) : 0.5 – 0.7 kΩ

HINT:
As the temperature increases, the resistance decreases.

NG → **Replace ambient temperature sensor.**

OK

Check multiplex communication system (See page DI–750).

DI7S7–01

DTC	13	Evaporator Temperature Sensor Circuit

CIRCUIT DESCRIPTION

This sensor detects the temperature inside the cooling unit and sends the appropriate signals to the A/C amplifier.

DTC No.	Detection Item	Trouble Area
13	Open or short in evaporator temperature sensor circuit.	• Evaporator temperature sensor. • Harness or connector between evaporator temperature sensor and A/C amplifier. • A/C amplifier.

WIRING DIAGRAM

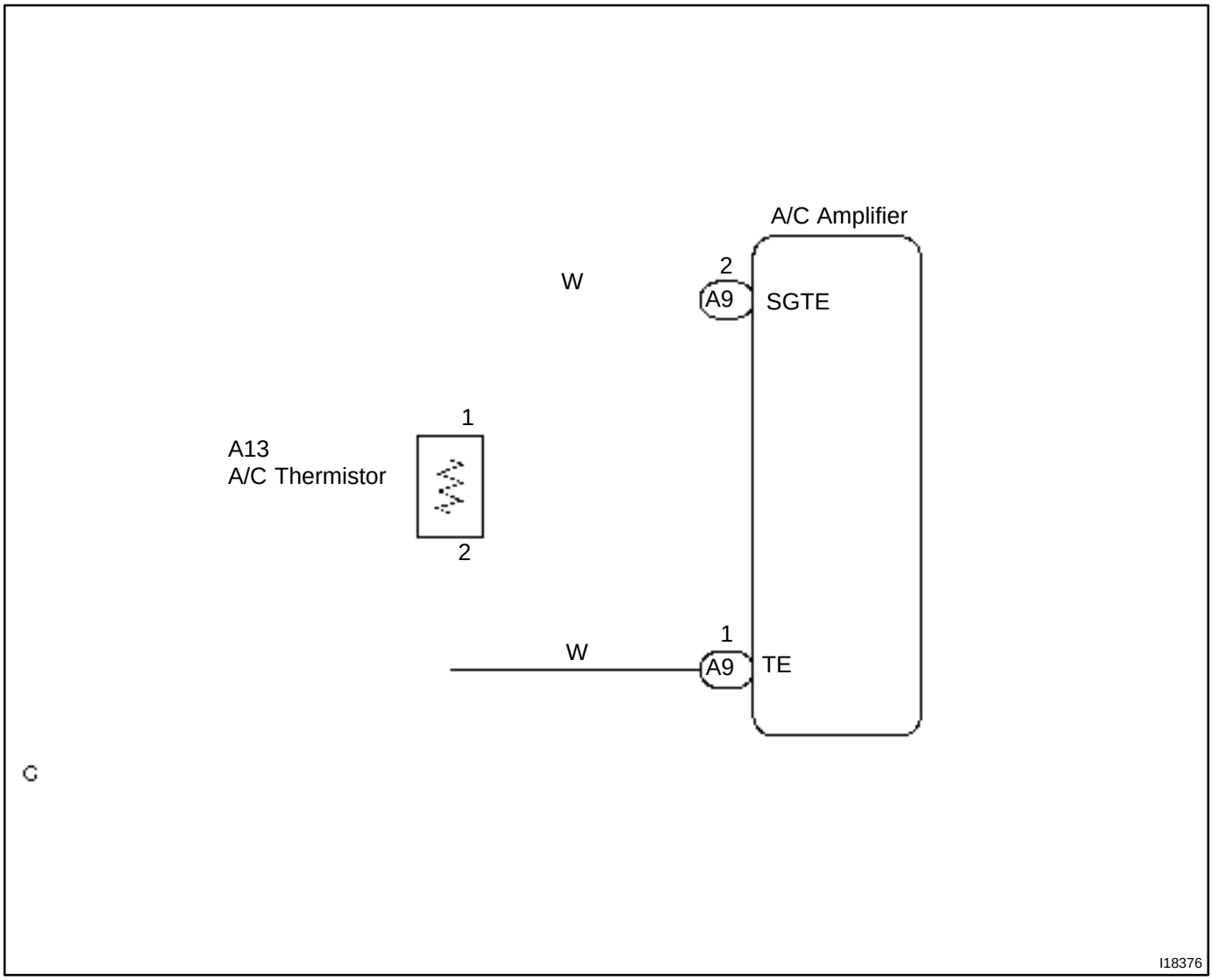

1	Check voltage between terminals TE and SGTE of A/C amplifier connector.

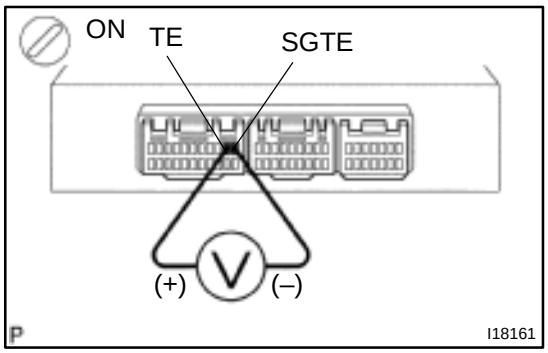

PREPARATION:

(a) Remove center cluster module control with connectors still connected.

(b) Turn ignition switch ON.

CHECK:

Measure voltage between terminals TE and SGTE of A/C amplifier connector at each temperature.

OK:

Voltage
at 0 ˚C (32 ˚F) : 2.0 – 2.4 V
at 15 ˚C (59 ˚F) : 1.4 – 1.8 V

HINT:

As the temperature increases, the voltage decreases.

NG → **Go to step 2.**

OK

Proceed to next circuit inspection shown on problem symptoms table (See page DI–874). However, if DTC 13 is displayed, check and replace A/C amplifier.

2	Check evaporator temperature sensor.

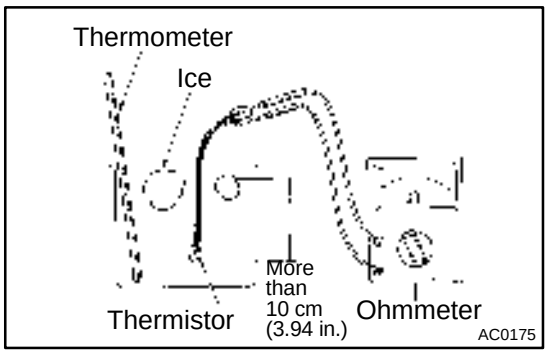

PREPARATION:

Remove evaporator temperature sensor (See page AC–27).

CHECK:

Check resistance between terminals 1 and 2 of evaporator temperature sensor connector at each temperature.

OK:

Resistance
at 0 ˚C (32 ˚F) : 4.6. – 5.1 kΩ
at 15 ˚C (59 ˚F) : 2.1 – 2.6 kΩ

HINT:

As the temperature increases, the voltage decreases.

NG → **Replace evaporator temperature sensor.**

OK

3	**Check harness and connector between A/C amplifier and evaporator temperature sensor (See page IN–41).**

NG → **Repair or replace harness or connector.**

OK

Check and replace A/C amplifier.

DI7S8–01

DTC	14	Engine Coolant Temperature Sensor Circuit

CIRCUIT DESCRIPTION

This sensor detects the engine coolant temperature and sends the appropriate signals to the A/C amplifier. These signals are used for warm up control when the engine is cold.

DTC No.	Detection Item	Trouble Area
14	Open or short in water temperature sensor circuit.	• Water temperature sensor • Harness or connector between engine coolant temp. sensor and ECM • Harness or connector between ECM and A/C amplifier • A/C amplifier

WIRING DIAGRAM

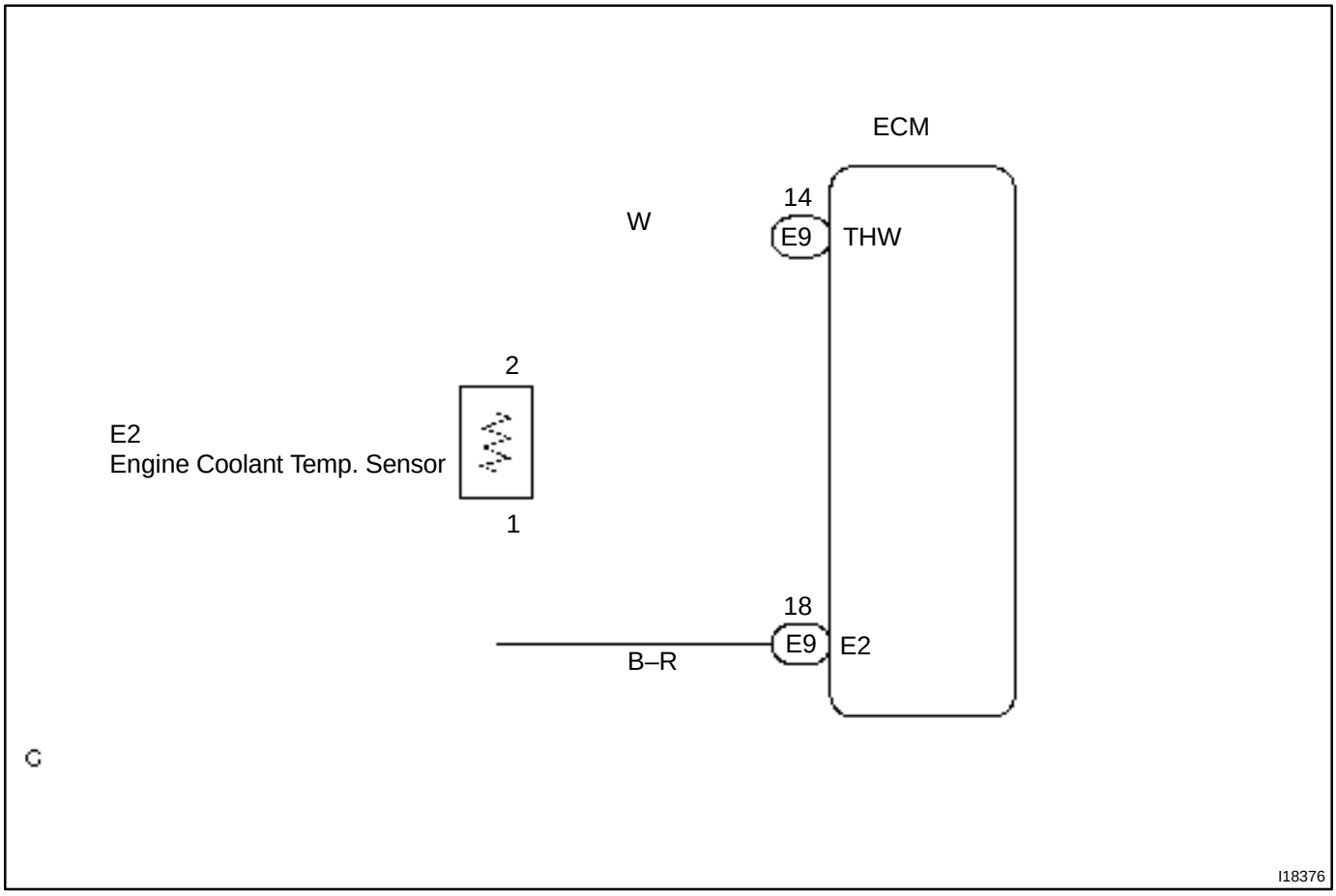

INSPECTION PROCEDURE

1	**Check engine coolant temp. sensor using hand–held tester.**

PREPARATION:
Connect the hand–held tester to the DLC3.
CHECK:
Check the engine coolant temp. sensor using DATA LIST.

OK → **Check or replace A/C amplifier.**

NG

2	**Check engine coolant temp. sensor.**

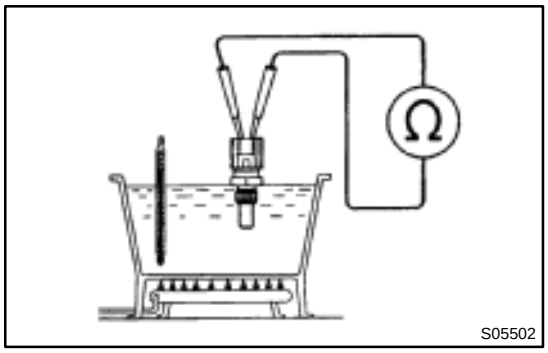

PREPARATION:
Remove engine coolant temp. sensor.
CHECK:
Measure resistance between terminals.
OK:
Resistance is within acceptable zone on chart.

Water temperature	Resistance
20°C (68°F)	2 – 3 kΩ
80°C (176°F)	0.2 – 0.4 kΩ

NG → **Replace engine coolant temp. sensor.**

OK

3	**Check for open and short in harness and connector between ECM and engine coolant temp. sensor (See page IN–41).**

NG → **Repair or replace harness or connector.**

OK

Check multiplex communication system (See page DI–750).

DI7S9–01

DTC	21	Solar Sensor Circuit

CIRCUIT DESCRIPTION

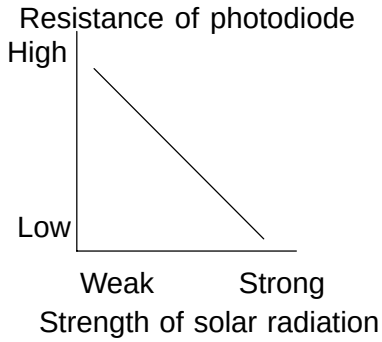

A photo diode in the solar sensor detects solar radiation and sends signals to the A/C amplifier.

DTC No.	Detection Item	Trouble Area
21	Open or short in solar sensor circuit. (Please note that display of DTC 21 is not abnormal when the sensor is not receiving solar radiation.)	• Solar sensor • Harness or connector between solar sensor and A/C amplifier. • A/C amplifier.

WIRING DIAGRAM

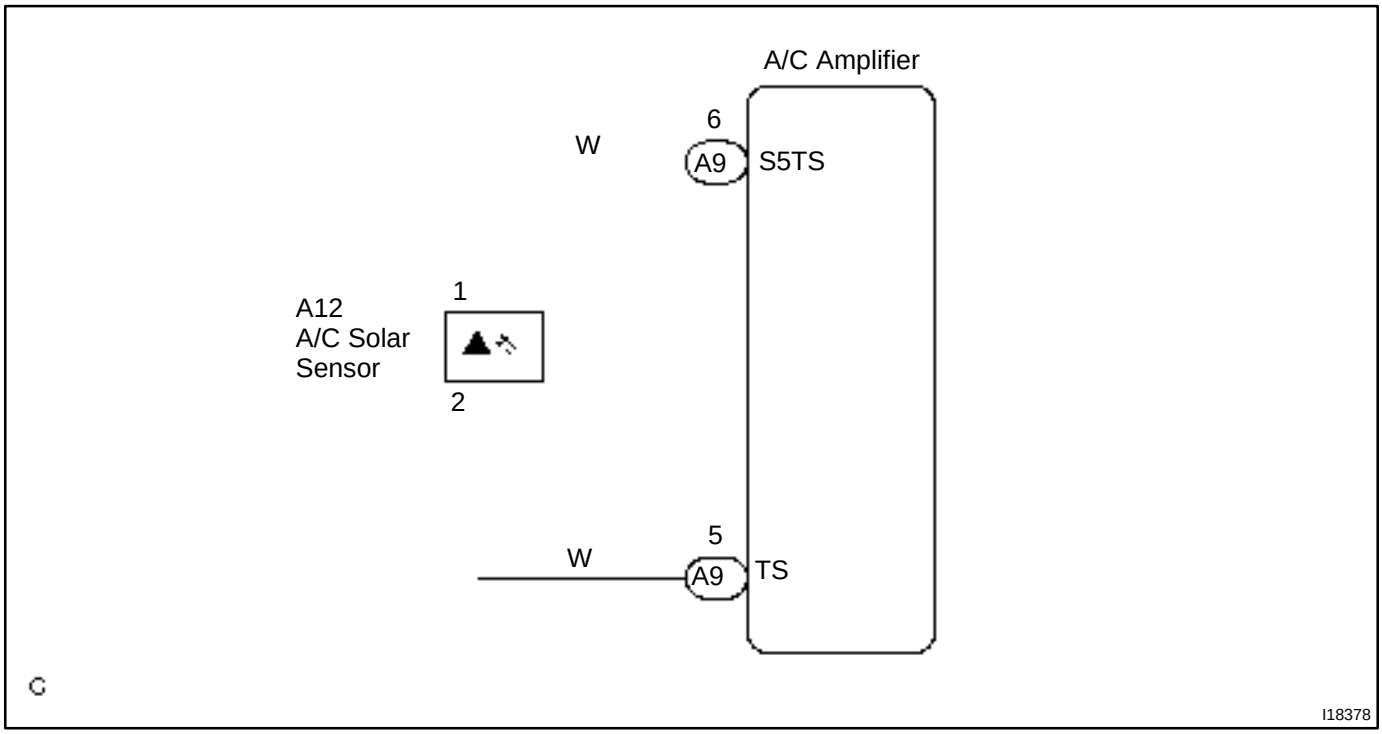

INSPECTION PROCEDURE

1	**Check voltage between terminals S5TS and TS of A/C amplifier connector.**

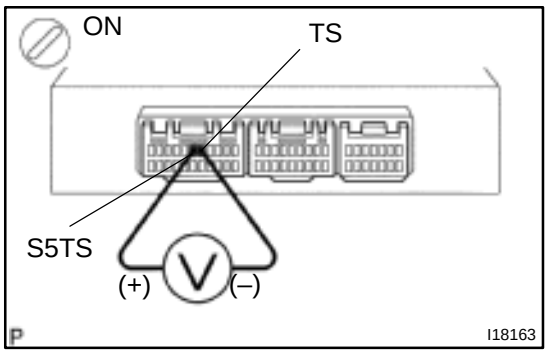

PREPARATION:

(a) Remove center cluster module control with connectors still connected.

(b) Turn ignition switch ON.

CHECK:

Measure voltage between terminals S5TS and TS of A/C amplifier connector when the solar sensor is subjected to an electric light, and when the sensor is covered by a cloth.

OK:

Condition	Voltage
Sensor subjected to electric light	Below 4.0 V
Sensor covered by a cloth	4.0 – 4.5 V

HINT:

As the inspection light is gradually moved away from the sensor, the voltage increases.

NG	**Go to step 2.**

NG

Proceed to next circuit inspection shown on problem symptoms table (See page DI–874). However, if DTC 21 is displayed, check and replace A/C amplifier.

2	Check solar sensor.

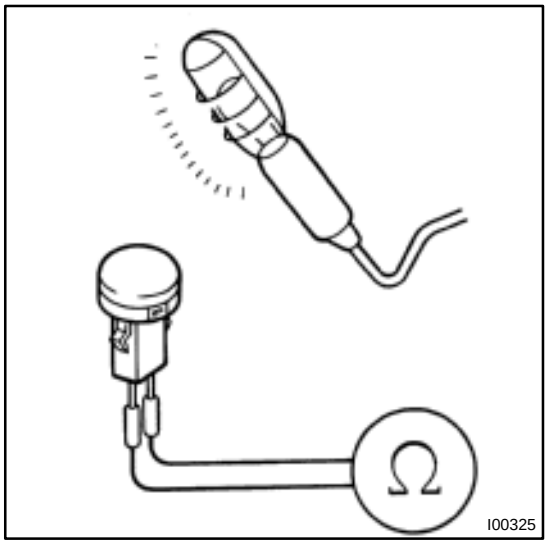

PREPARATION:

Remove solar sensor (See page AC–59).

CHECK:

(a) Cover the sensor by a cloth.

(b) Measure resistance between terminals 1 and 2 of solar sensor connector.

HINT:

Connect positive (+) lead of ohmmeter to terminal 2 and negative (–) lead to terminal 1 of the solar sensor.

OK:

Resistance : ∞ Ω (No continuity)

PREPARATION:

Remove the cloth from the solar sensor and subject the sensor to electric light.

CHECK:

Measure resistance.

OK:

Resistance : Below 10 kΩ (Continuity)

HINT:

As the electric light is moved gradually away from the sensor, the resistance increases.

NG → **Replace solar sensor.**

OK ↓

3	Check harness and connector between A/C amplifier and solar sensor (See page IN–41).

NG → **Repair or replace harness or connector.**

OK ↓

Check and replace A/C amplifier.

DI7SA–01

DTC	22	Compressor Lock Sensor Circuit

CIRCUIT DESCRIPTION

This sensor sends 1 pulse par engine revolution to the A/C amplifier. If the number ratio of the compressor speed divided by the engine speed is smaller than a predetermined value, the A/C amplifier turns the compressor off. And, the indicator flashes at about 1 sec. intervals.

DTC No.	Detection Item	Trouble Area
22	All conditions below are detected for 3 secs. or more. (a) Engine speed : 450 rpm or more. (b) Ratio between engine and compressor speed deviates 20 % or more in comparison to normal operation.	• Compressor • Compressor drive belt • Compressor lock sensor • Harness or connector between compressor and A/C amplifier • A/C amplifier

WIRING DIAGRAM

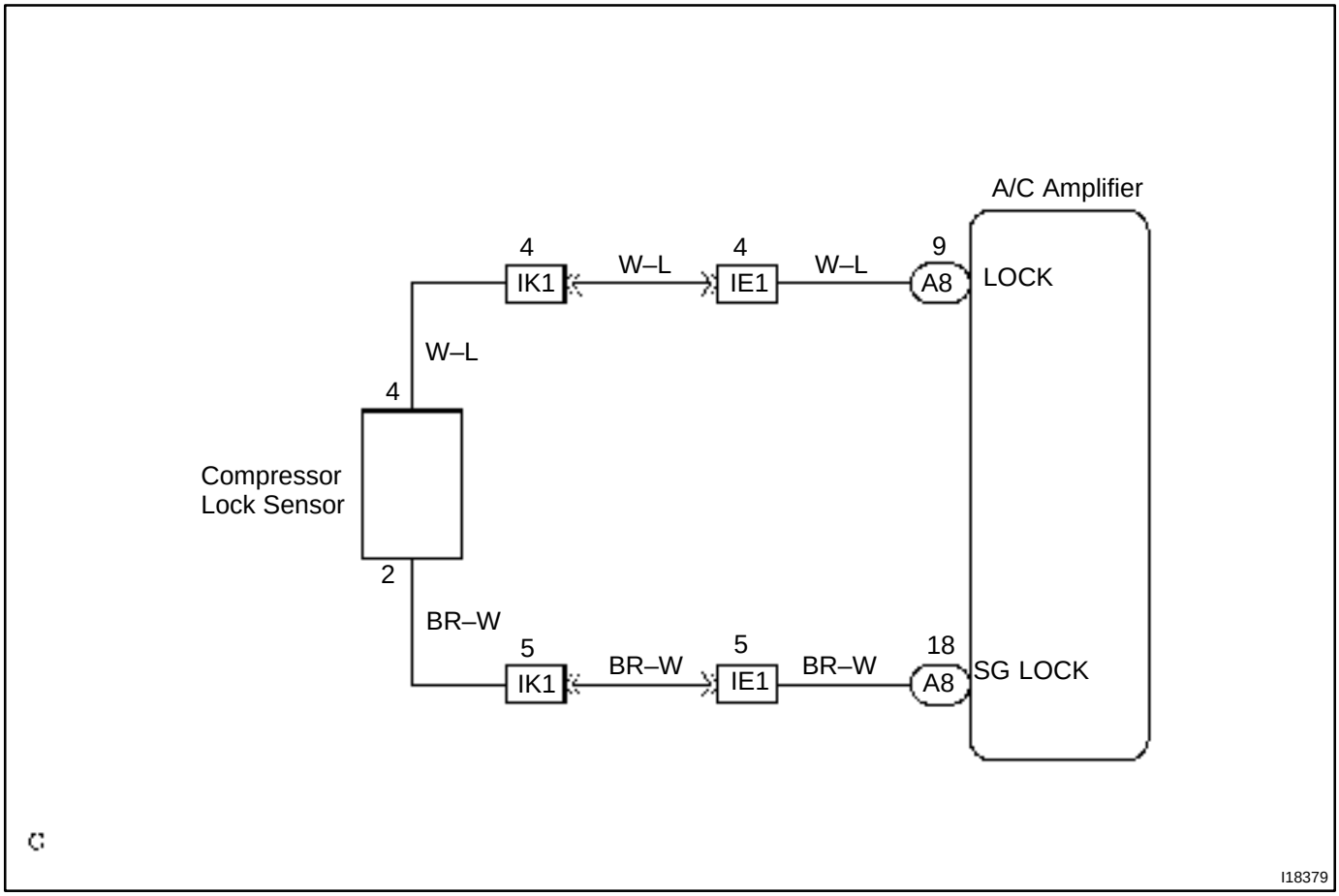

INSPECTION PROCEDURE

1	**Check compressor.**

PREPARATION:

(a) Check compressor drive belt tension (See page AC–15).

(b) Check if the compressor does not lock during operation with engine started and blower switch and A/C switch ON.

NG → **Adjust drive belt tension or repair compressor.**

OK

2	**Check compressor lock sensor.**

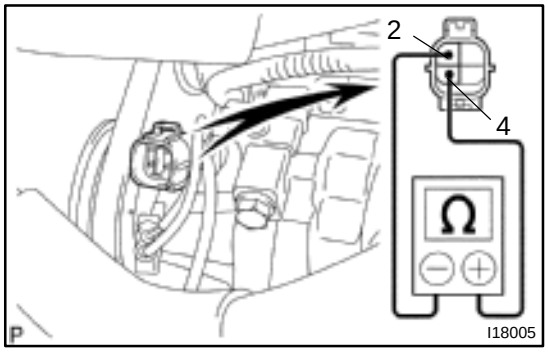

PREPARATION:

Disconnect compressor lock sensor connector.

CHECK:

Measure resistance between terminals 2 and 4 of compressor lock sensor connector.

OK:

Resistance : at 20 ˚C (68 ˚F) : 65 – 125 Ω

Reference : Inspection using oscilloscope

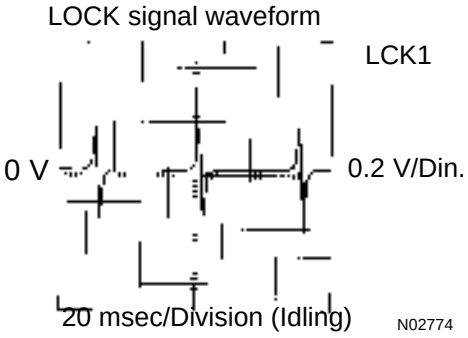

During cranking or idling, measure voltage between terminals LOCK and SGLOCK of A/C amplifier.

HINT:

The correct waveform appears as shown in the illustration on the left.

NG → **Replace compressor.**

OK

3	**Check harness and connector between A/C amplifier and compressor lock sensor (See page IN–41).**

NG → **Repair or replace harness or connector.**

OK

Proceed to next circuit inspection shown on problem symptoms table (See page DI–874). However, if DTC 22 is displayed, check and replace A/C amplifier.

DI7SB–01

DTC	23	Pressure Switch Circuit

CIRCUIT DESCRIPTION

This pressure switch sends the appropriate signals to the A/C amplifier when the A/C refrigerant pressure drops too low or rises too high. When the A/C amplifier receives these signals, if outputs signals via the A/C amplifier to switch off the compressor relay and turns the magnetic clutch off.

DTC No.	Detection Item	Trouble Area
23	• Open in pressure sensor circuit. • Abnormal refrigerant pressure. below 196 kPa (2.0 kgf/cm^2. 28 psi) over 3,140 kPa (32.0 kgf/cm^2. 455 psi)	• Pressure switch • Harness or connector between pressure switch and A/C amplifier • Refrigerant pipe line • A/C amplifier

WIRING DIAGRAM

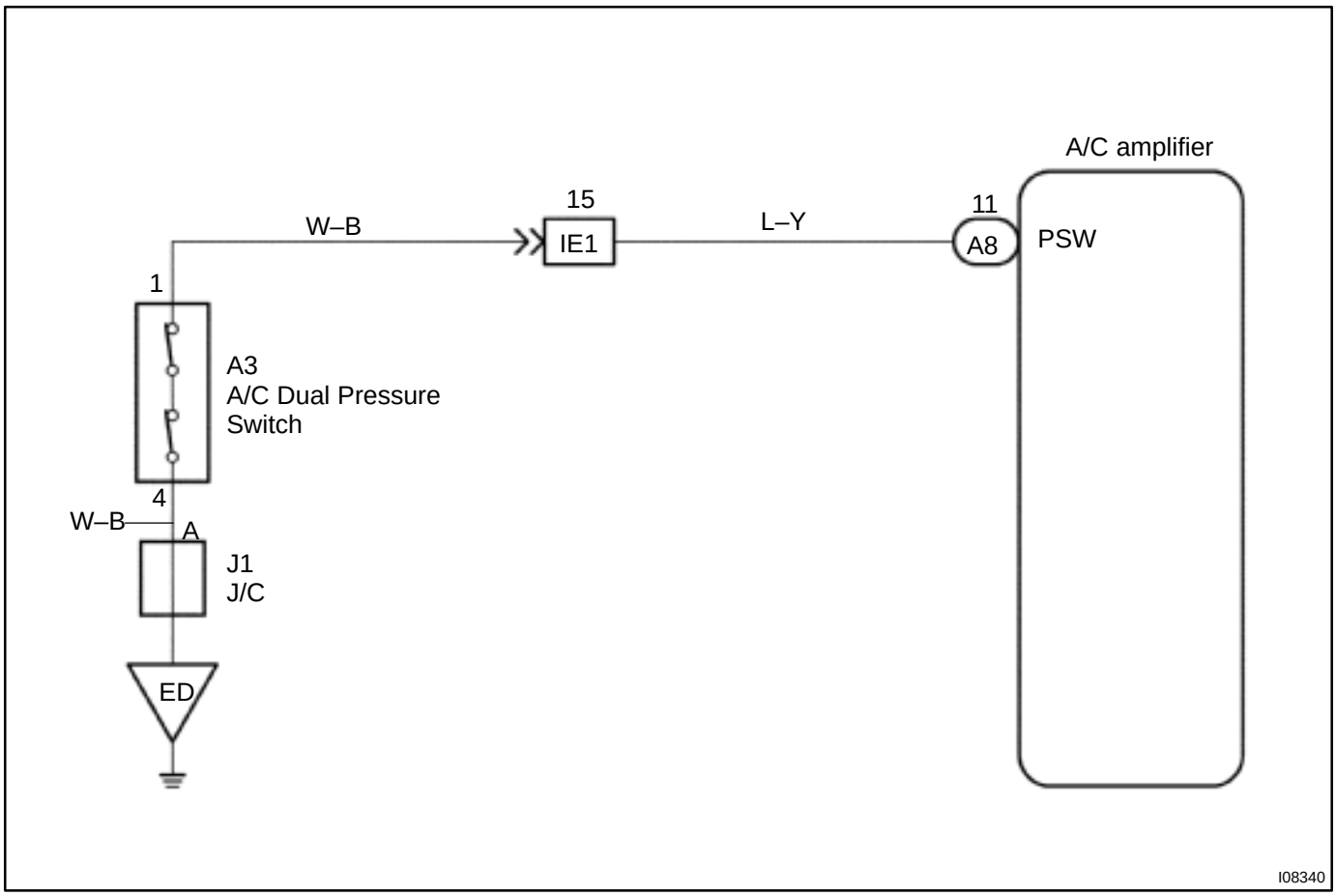

INSPECTION PROCEDURE

1	**Check voltage between terminals PSW of A/C amplifier and body ground.**

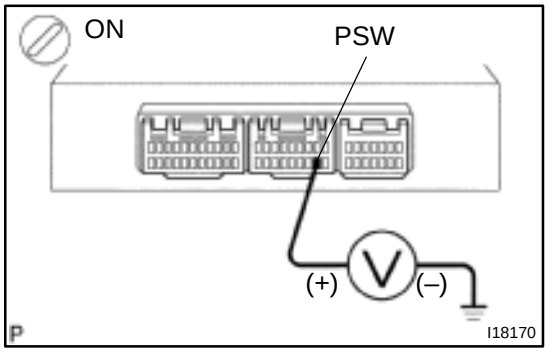

PREPARATION:

(a) Install the manifold gauge set (See page AC–18).
(b) Remove the center cluster module control with connectors still connected.
(c) Turn ignition switch ON.

CHECK:

Check voltage between terminals PSW of A/C amplifier connector and body ground when refrigerant pressure is changed.

OK:

The voltage changes refrigerant pressure, as shown in the chart below.

Low Pressure Cut Side	Referaence : High Pressure Cut SIde
ON (0 V) 225 kPa 196 kPa OFF (12V)	ON (0 V) 2,550 kPa 3,140 kPa OFF (12V)

OK → **Proceed to next circuit inspection shown on problem symptoms table (See page DI–874).**

NG

2	Check pressure switch.

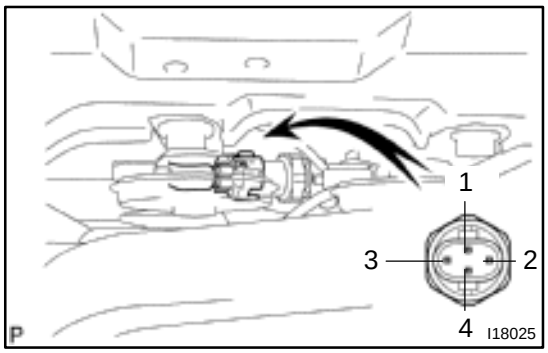

PREPARATION:

Disconnect pressure switch connector.

CHECK:

Check continuity between terminals 1 and 4 of pressure switch when refrigerant is changed.

OK:

The continuity changes with refrigerant pressure as shown in the chart below.

Low Pressure Cut Side	Referaence : High Pressure Cut SIde
ON (Continuity) 225 kPa 196 kPa OFF (No continuity)	ON (Continuity) 2,550 kPa 3,140 kPa OFF (No continuity)

NG → **Replace pressure switch.**

OK ↓

3	Check harness and connector between A/C amplifier and pressure switch, pressure switch and body ground (See page IN–41).

NG → **Repair or replace harness or connector.**

OK ↓

Check and replace A/C amplifier.

DI7SC–01

DTC	31, 41	Air Mix Damper Position Sensor Circuit

CIRCUIT DESCRIPTION

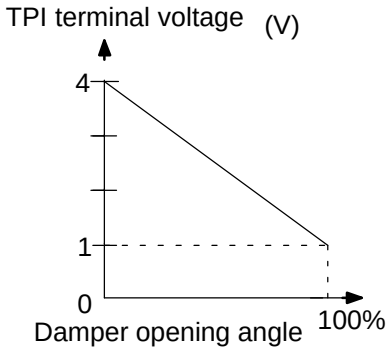

This sensor detects the position of the air mix damper and sends the appropriate signals to the A/C amplifier. The position sensor is built into the air mix control servomotor.

DTC No.	Detection Item	Trouble Area
31	Short to ground or power source circuit in air mix damper position sensor circuit.	• Air mix damper position sensor. • Harness of connector between air mix control servomotor and A/C amplifier. • A/C amplifier.
41	Air mix damper position sensor value does not change even if A/C amplifier operates air mix control servomotor.	

WIRING DIAGRAM

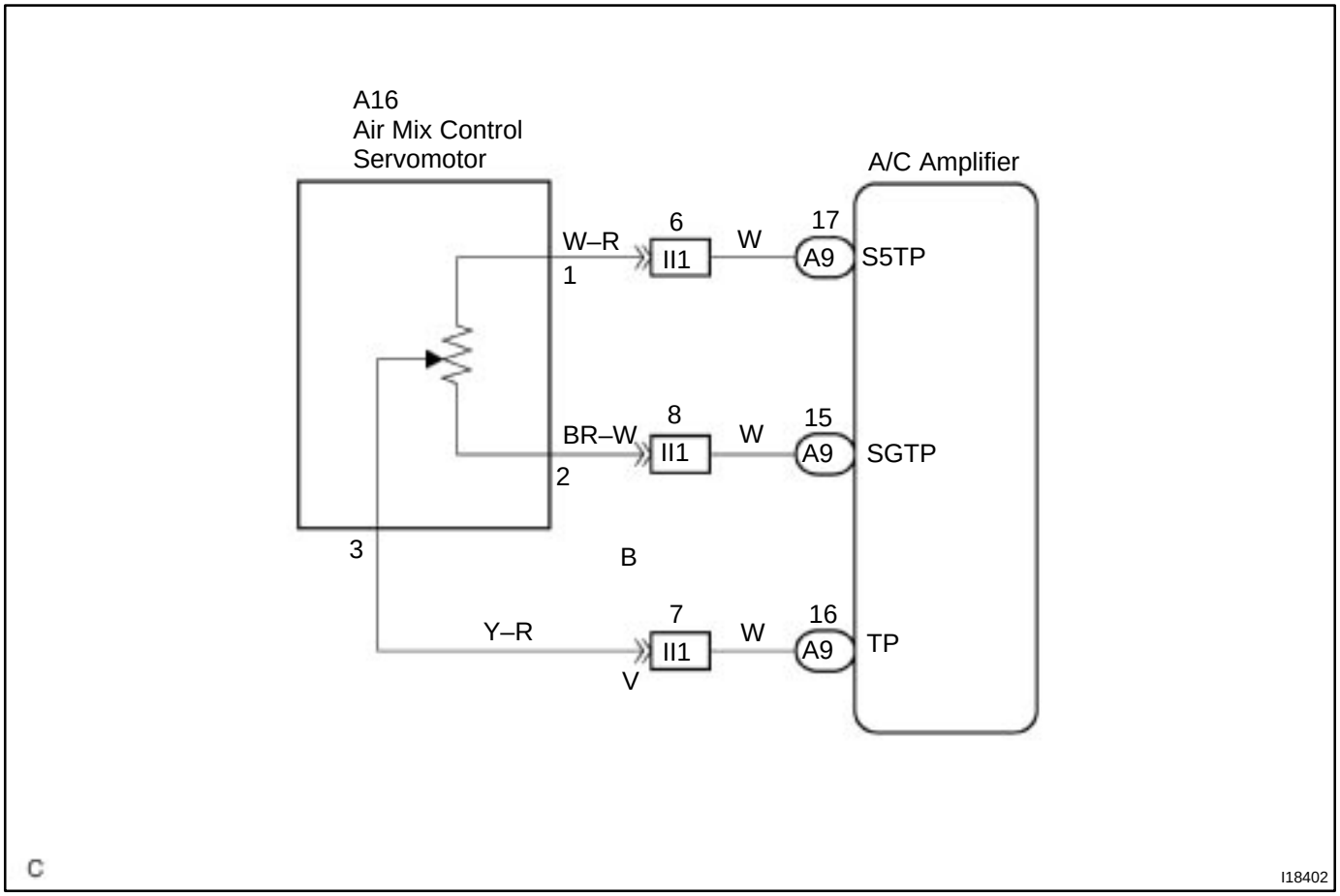

INSPECTION PROCEDURE

1	**Check voltage between terminals TP and SGTP of A/C amplifier connector.**

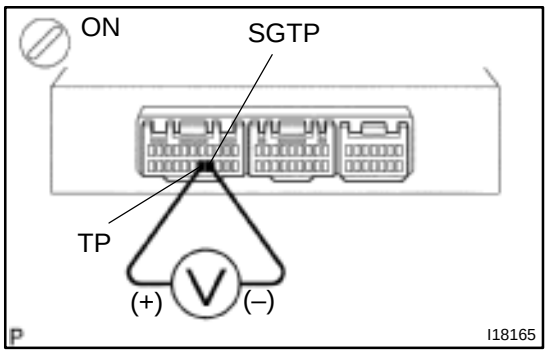

PREPARATION:

(a) Remove center cluster module control with connectors still connected.

(b) Turn ignition switch ON.

CHECK:

Change the set temperature to activate the air mix damper, and measure the voltage between terminals TP and SGTP of A/C amplifier connector each time when the set temperature is changed.

OK:

Set Temperature	Voltage
Max. COOL	3.5 – 4.5 V
Max. WARM	0.5 – 1.8 V

HINT:

As the set temperature increases, the voltage decreases gradually without interruption.

NG → **Go to step 2.**

OK

Proceed to next circuit inspection shown on problem symptoms table (See page DI–874). However, if DTC 31 or 41 is displayed, check and replace A/C amplifier.

2	Check air mix damper position sensor.

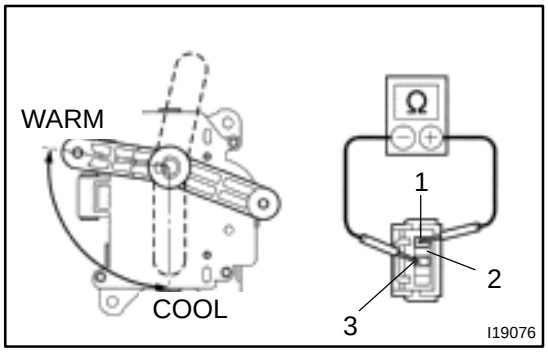

PREPARATION:

Remove air mix control servomotor (See page AC–56).

CHECK:

Measure resistance between terminals 1 and 2 of air mix control servomotor connector.

OK:

Resistance : 4.2 – 7.8 kΩ

CHECK:

While operating air mix control servomotor as shown in the procedure on page DI–906, measure resistance between terminals 2 and 3 of air mix control servomotor connector.

OK:

Position	Resistance
Max. COOL	3.6 – 6.7 kΩ
Max. WARM	0.6 – 1.1 kΩ

HINT:

As the air mix control servomotor moves from cool side to hot side, the resistance decreases gradually without interruption.

NG → **Replace air mix control servomotor.**

OK

3	Check harness and connector between A/C amplifier and air mix control servomotor (See page IN–41).

NG → **Repair or replace harness or connector.**

OK

Check and replace A/C amplifier.

DI7SD–01

DTC	32, 42	Air Inlet Damper Position Sensor Circuit

CIRCUIT DESCRIPTION

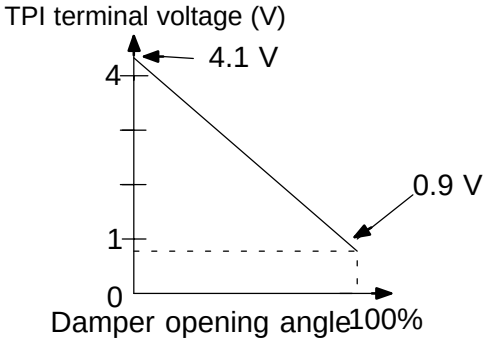

This sensor detects the position of the air inlet damper and sends the appropriate signals to the A/C amplifier. The position sensor is built into the air inlet control servomotor.

DTC No.	Detection Item	Trouble Area
32	Short to ground or power source circuit in air inlet damper position sensor circuit.	• Air inlet damper position sensor • Harness or connector between air inlet control servomotor and A/C amplifier • A/C amplifier
42	Air inlet damper position sensor value does not change even if A/C amplifier operates air inlet control servomotor.	

WIRING DIAGRAM

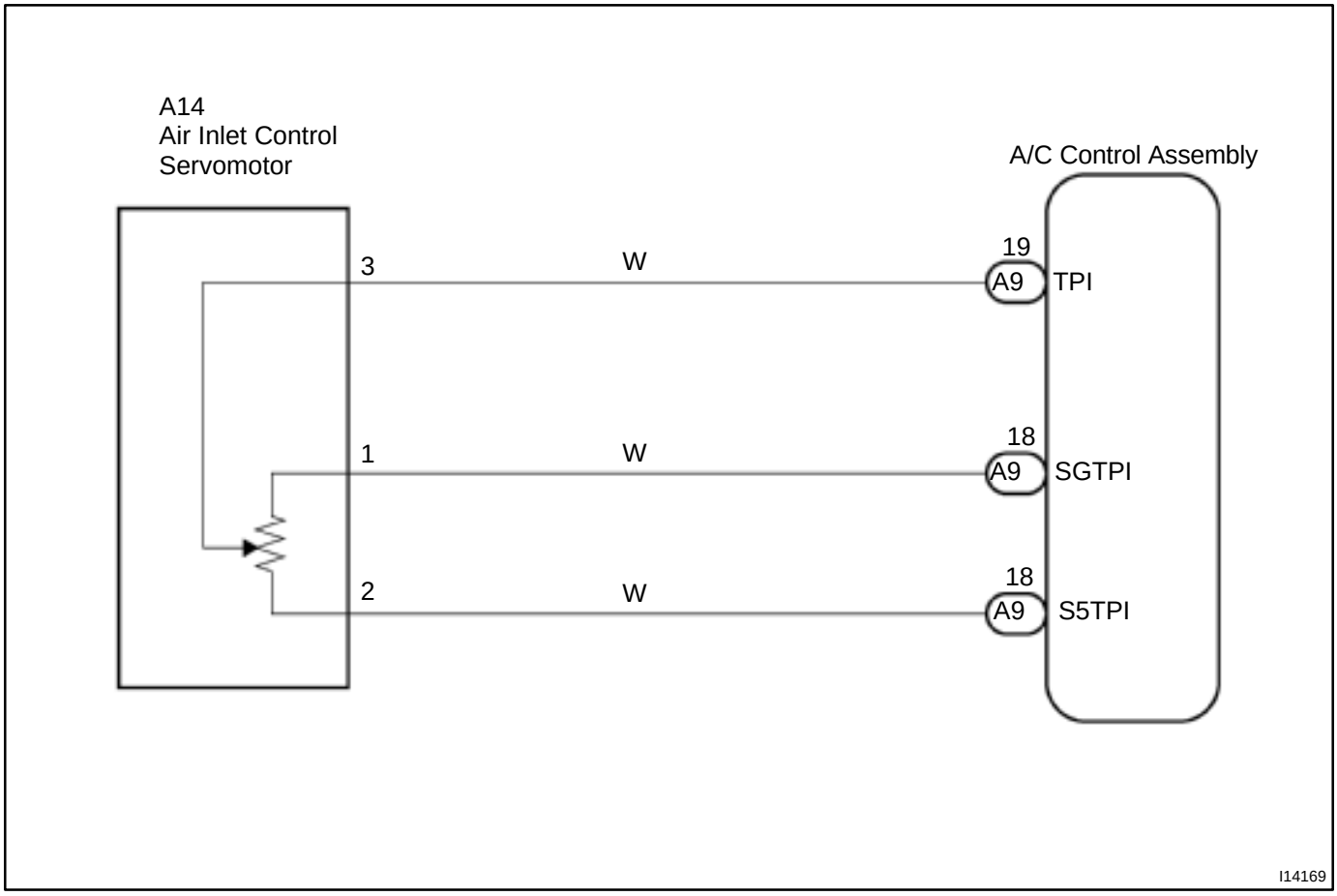

INSPECTION PROCEDURE

1	**Check voltage between terminals TPI and SGTPI of A/C amplifier connector.**

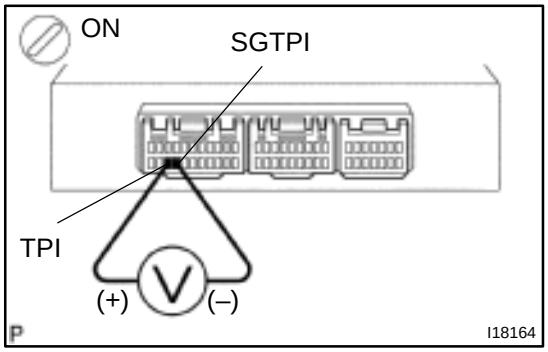

PREPARATION:

(a) Remove center cluster module control with connectors still connected.

(b) Turn ignition switch ON.

CHECK:

Press REC/FRS switch to change air inlet between fresh and recirculation air and measure voltage between terminals TPI and SGTPI of A/C amplifier when the air inlet servomotor operates.

OK:

REC/FRS Switch	Voltage
REC	3.5 – 4.5 V
FRS	0.5 – 1.8 V

HINT:

As the air inlet control servomotor is moved from REC side to FRS side, the voltage decreases gradually without interruption.

NG → **Go to step 2.**

OK

Proceed to next circuit inspection shown on problem symptoms table (See page DI–874). However, if DTC 32 or 42 is displayed, check and replace A/C amplifier.

2	Check air inlet damper position sensor.

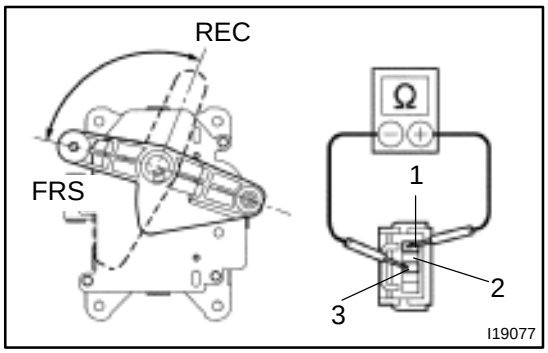

PREPARATION:
Remove air inlet control servomotor (See page AC–33).
CHECK:
Measure resistance between terminals 1 and 2 of air inlet control servomotor connector.
OK:
Resistance : 4.2 – 7.8 kΩ
CHECK:
While operating air inlet control servomotor as in the procedure on page DI–909, measure resistance between terminals 2 and 3 of air inlet control servomotor connector.
OK:
Resistance :

Damper Position	Resistance
REC side	3.4 – 6.2 kΩ
FRS side	0.8 – 1.6 kΩ

HINT:
As the air inlet control servomotor is moved from REC side to FRS side, the resistance decreases gradually without interruption.

NG → **Replace air inlet control servomotor.**

OK ↓

3	Check harness and connector between A/C amplifier and air inlet control servomotor (See page IN–41).

NG → **Repair or replace harness or connector.**

OK ↓

Check and replace A/C amplifier.

DI7SE–01

DTC	33, 43	Air Outlet Damper Position Sensor Circuit

CIRCUIT DESCRIPTION

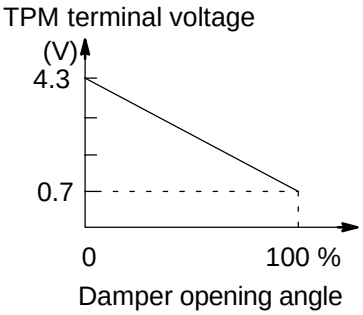

This sensor detects the position of the air outlet damper and sends the appropriate signals to the A/C amplifier.
The position sensor is built into the air outlet damper control servomotor assembly.

DTC No.	Detection Item	Trouble Area
33	Short to ground or power source circuit in air outlet damper position sensor circuit.	• Air outlet damper position sensor. • Harness or connector between air outlet damper control servomotor assembly and A/C amplifier. • A/C amplifier.
43	Air outlet damper position sensor value does not change even if A/C amplifier operates air outlet damper control servomotor.	

WIRING DIAGRAM

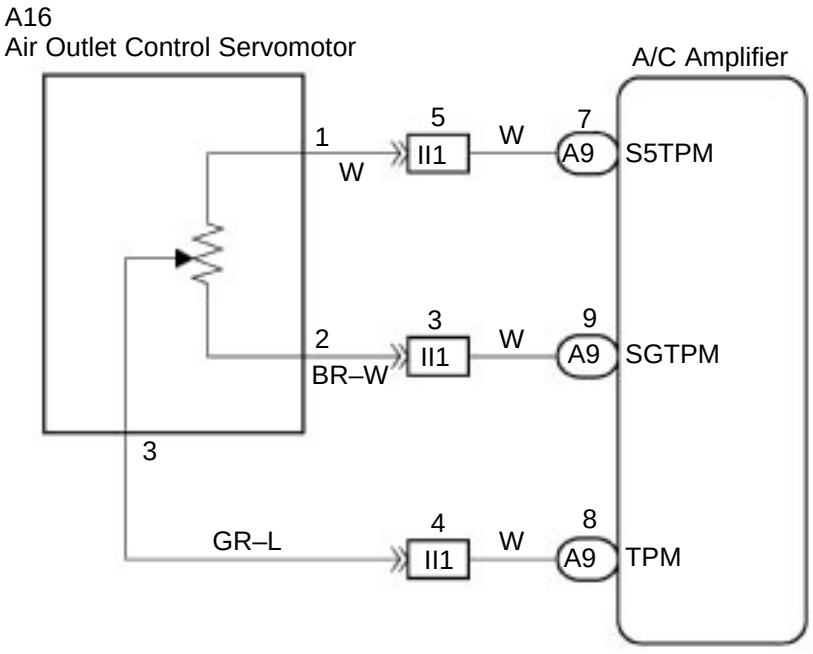

C

I18402

1	Check voltage between terminals TPM and SGTPM of A/C amplifier connector.

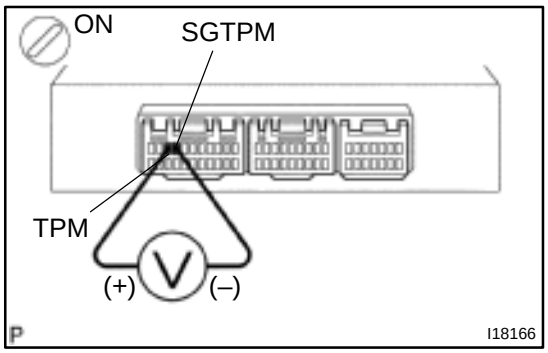

PREPARATION:

(a) Remove center cluster module control with connectors still connected.

(b) Turn ignition switch ON.

CHECK:

Measure the voltage between terminals TPM and SGTPM of A/C amplifier.

OK:

Air inlet selector	Voltage
FACE	3.5 – 4.5 V
DEF	0.5 – 1.5 V

HINT:

As the air outlet damper control servomotor is moved from FACE side to DEF side, the voltage decreases gradually without interruption.

NG → **Go to step 2.**

OK

Proceed to next circuit inspection shown on problem symptoms table (See page DI–874). However, if DTC 34 or 44 is displayed, check and replace A/C amplifier.

2	Check air outlet damper position sensor.

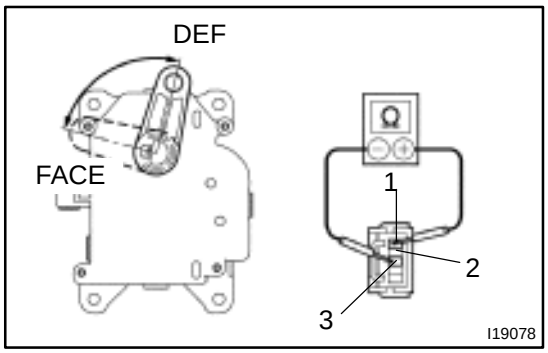

PREPARATION:
Remove air outlet servomotor (See page AC–57).
CHECK:
Measure resistance between terminals 1 and 2 of air outlet servomotor assembly connector.
OK:
Resistance : 4.2 – 7.8 kΩ
CHECK:
While operating air outlet damper control servomotor as in the procedure on page DI–912, measure resistance between terminals 2 and 3 of air outlet damper control servomotor.
OK:
Resistance:

Damper Position	Resistance
DEF	3.6 – 6.7 kΩ
FACE	0.6 – 1.1 kΩ

HINT:
As the air outlet servomotor moves from DEF side to FACE side, the resistance decreases gradually without interruption.

NG → **Replace air outlet control servomotor assembly.**

OK

3	Check harness and connector between A/C amplifier and air outlet control servomotor assembly (See page IN–41).

NG → **Repair or replace harness or connector.**

OK

Check and replace A/C amplifier.

DI7SF–01

DTC	41	Air Mix Control Servomotor Circuit

CIRCUIT DESCRIPTION

This air mix control servomotor is controlled by the A/C amplifier and moves the air mix damper to the desired position.

DTC No.	Detection Item	Trouble Area
41	Air mix damper position sensor value does not change even if A/C amplifier operates air mix control servomotor.	• Air mix control servomotor. • Air mix damper position sensor. • Harness or connector between A/C amplifier and air mix control servomotor, air mix damper position sensor. • A/C amplifier.

WIRING DIAGRAM

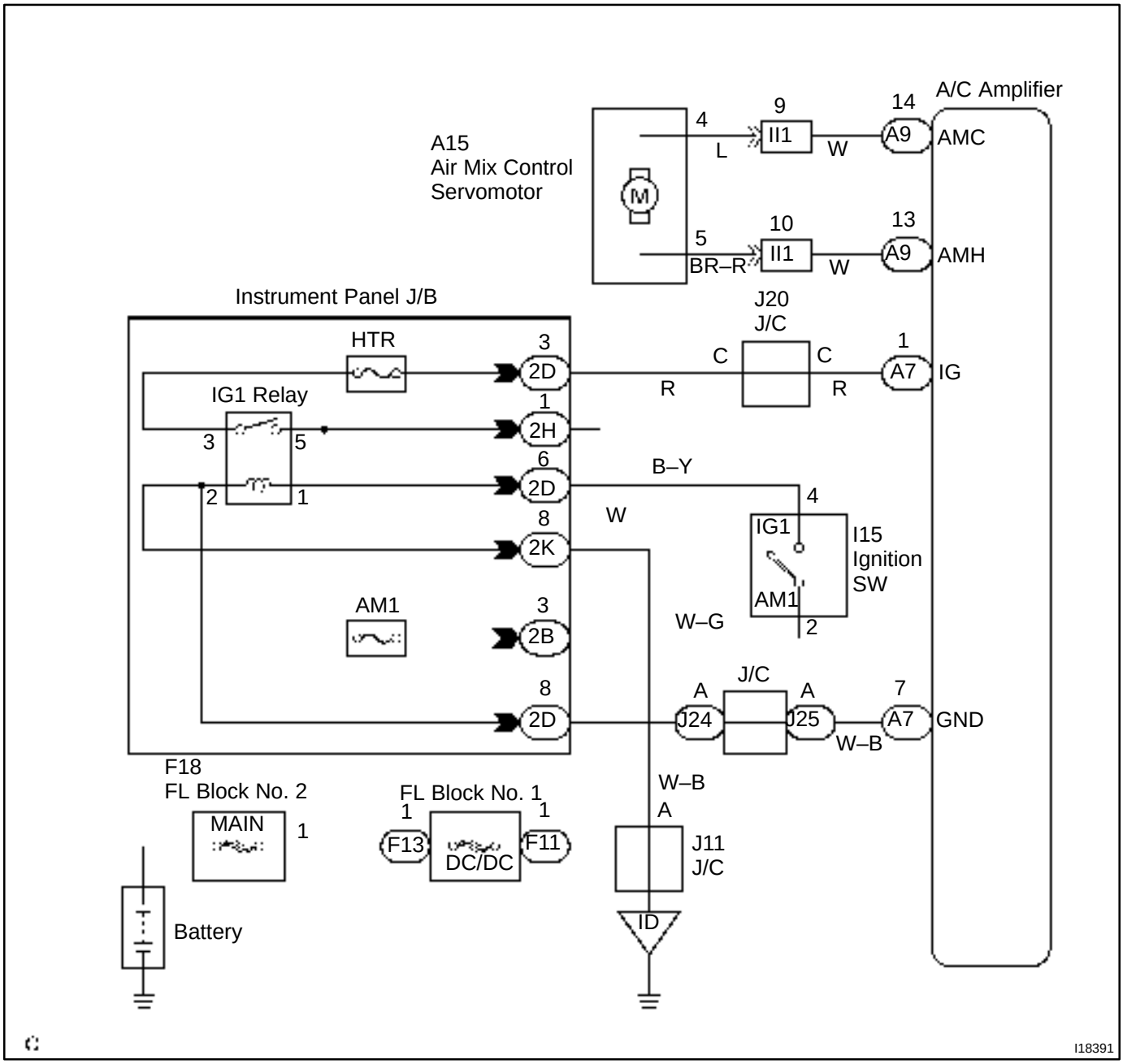

INSPECTION PROCEDURE

1	**Actuator check.**

PREPARATION:

(a) Warm up the engine.

(b) Set to the actuator check mode (See page DI–866).

CHECK:

Operate the temperatur control switch and check the operation of the air mix damper and the condition of the blower.

OK:

Temp. Setting ˚C (˚F)	Air Mix Damper	Condition
Max. COOL ↔ 20.5 (66)	–10 % (Fully closed)	Cool air comes out
21.0 ↔ 23.5 (67 ↔ 72)	↑	↑
24.0 ↔ 26.0 (73 ↔ 77)	50 %	
26.5 ↔ 29.0 (78 ↔ 83)	↑	
29.5 (84) ↔ Max. WARM	100 % (Fully opened)	Warm air comes out

OK → **Proceed to next circuit inspection shown on problem symptoms table (See page DI–874).**

NG

2	Check air mix control servomotor.

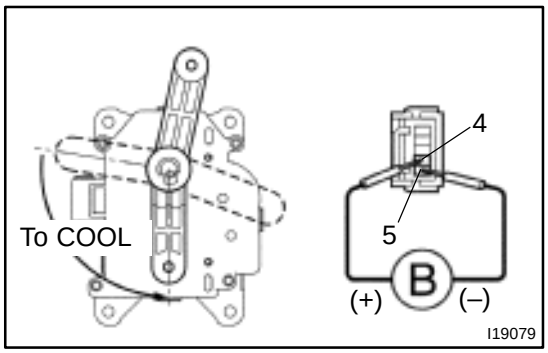

PREPARATION:
Remove air mix control servomotor (See page AC–56).
CHECK:
Connect positive (+) lead to terminal 4 and the negative (–) lead to terminal 5.
OK:
The lever turns smoothly to COOL side.

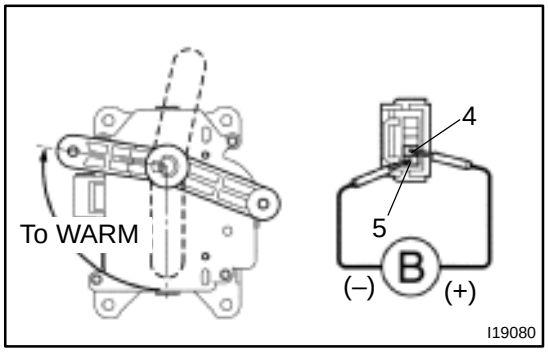

CHECK:
Connect negative (–) lead to terminal 4 and positive (+) lead to terminal 5.
OK:
The lever turns smoothly to WARM side.

NG → **Replace air mix control servomotor.**

OK

3	Check harness and connector between A/C amplifier and air mix control servomotor (See page IN–41).

NG → **Repair or replace harness or connector.**

OK

Check and replace A/C amplifier.

DI7SG–01

DTC	42	Air Inlet Control Servomotor Circuit

CIRCUIT DESCRIPTION

The air inlet control servomotor is controlled by the A/C amplifier and moves the air inlet damper to the desired position.

DTC No.	Detection Item	Trouble Area
42	Air inlet damper position sensor value does not change even if A/C amplifier operates air inlet control servomotor.	• Air inlet damper position sensor • Harness or connector between air inlet control servomotor and A/C amplifier • A/C amplifier

WIRING DIAGRAM

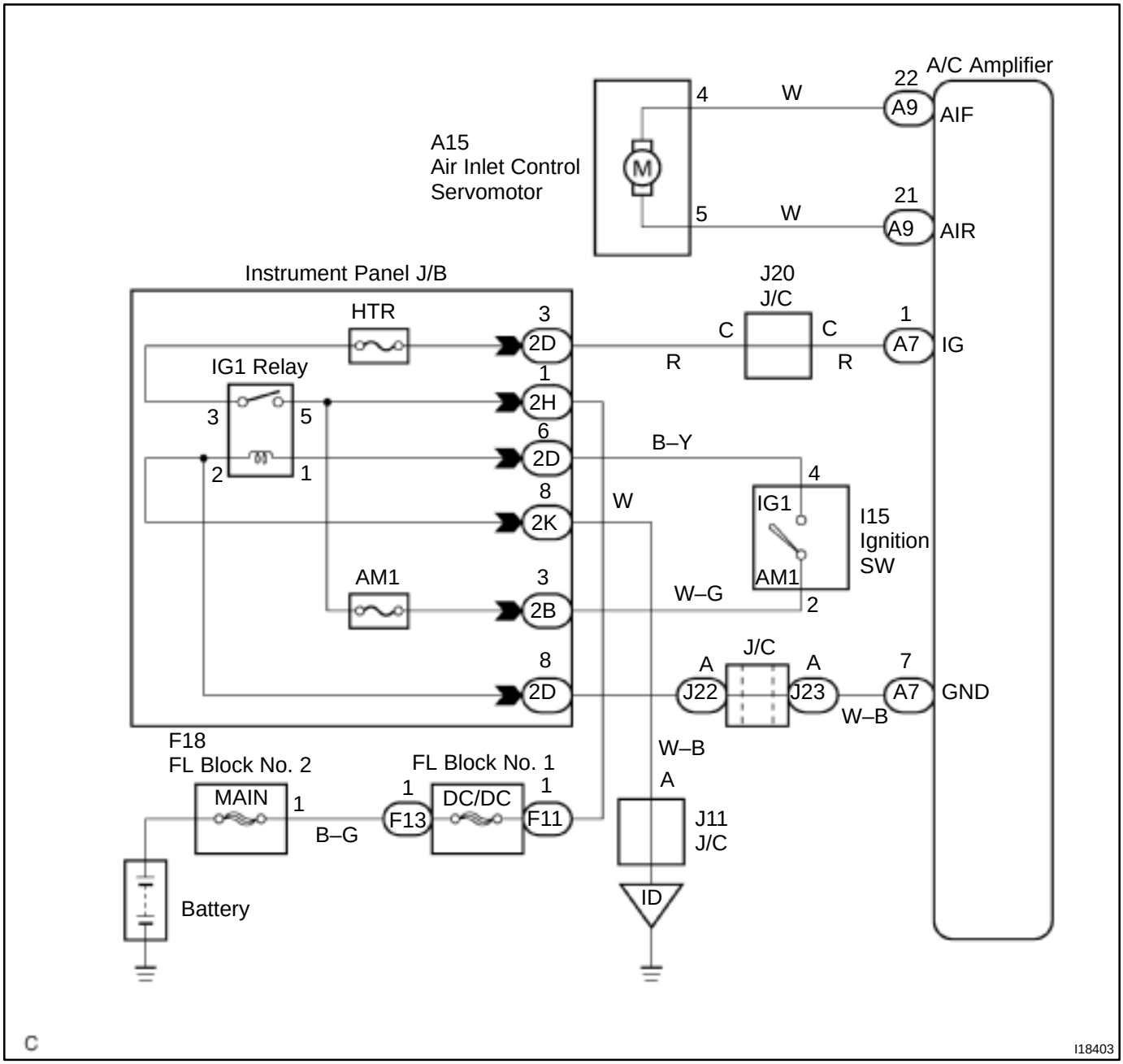

INSPECTION PROCEDURE

1	Actuator check.

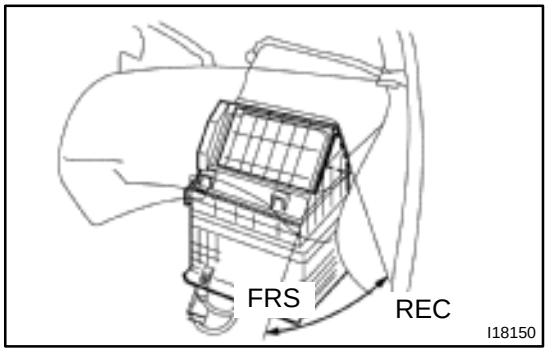

PREPARATION:

(a) Remove glove compartment door to see and check the air inlet damper operation.

(b) Set to the actuator check mode (See page DI–866).

(c) Operate the temperature control switch and change it to step operation.

CHECK:

Operate the temperature control switch and check the operation air inlet damper.

OK:

Temp. setting ˚C (˚F)	Air Inlet Damper
Max. COOL ↔ 20.5 (66)	REC
21.0 ↔ 26.0 (67 ↔ 77)	REC/FRS
26.5 (78) ↔ Max. WARM	FRS

OK → **Proceed to next circuit inspection shown on problem symptoms table (See page DI–874).**

NG

2	Check air inlet control servomotor.

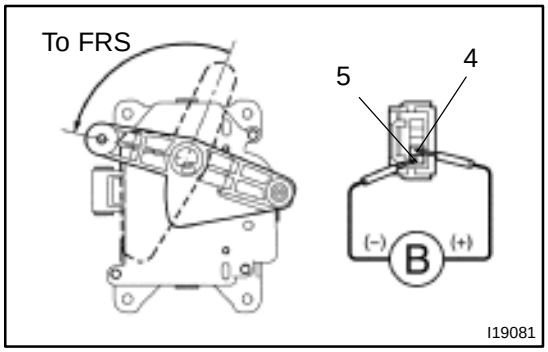

PREPARATION:
Remove air inlet control servomotor (See page AC–33).
CHECK:
Connect positive (+) lead from the battery to terminal 4 and negative (–) lead to terminal 5.
OK:
The lever moves smoothly to FRS position.

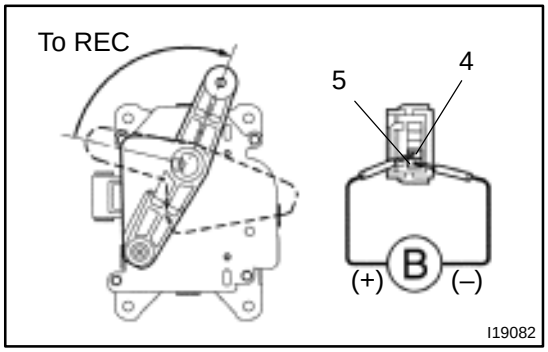

CHECK:
Connect negative (+) lead from the battery to terminal 5 and positive (–) lead to terminal 4.
OK:
The lever moves smoothly to REC position.

NG → **Replace air inlet control servomotor assembly.**

OK ↓

3	Check harness and connector between A/C amplifier and air inlet control servomotor (See page IN–41).

NG → **Repair or replace harness or connector.**

OK ↓

Check and replace A/C amplifier.

DI7SH–01

DTC	43	Air Outlet Damper Control Servomotor Circuit

CIRCUIT DESCRIPTION

This circuit turns the servomotor and changes each mode damper position by the signals from the A/C amplifier. When the AUTO switch is on, the A/C amplifier changes the mode automatically between (FACE), (BI–LEVEL) and (FOOT) according to the temperature setting.

DTC No.	Detection Item	Trouble Area
43	Air outlet damper position sensor value does not change even if A/C amplifier operated air outlet damper control servomotor.	• Air outlet damper control servomotor. • Air outlet damper position sensor. • Harness or connector between A/C amplifier air outlet damper control servomotor, air outlet damper position sensor. • A/C amplifier.

WIRING DIAGRAM

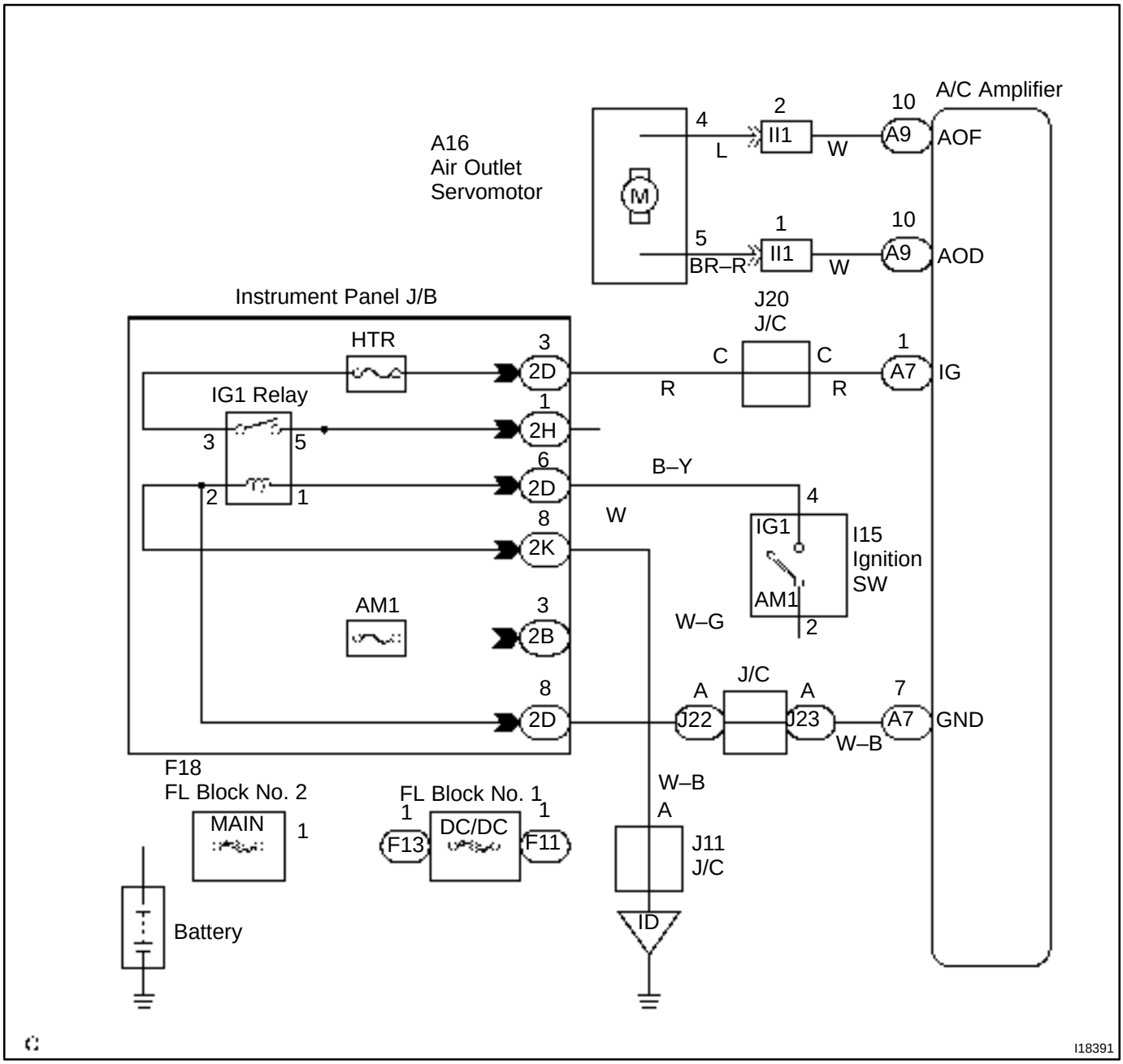

INSPECTION PROCEDURE

1	**Actuator check.**

Temp. setting ˚C (˚F)	Air Flow
Max. COOL ↔ 20.5 (66)	FACE
21.0 ↔ 23.5 (67 ↔ 72)	B/L
24.0 ↔ 26.0 (73 ↔ 77)	FOOT
26.5 ↔ 29.0 (78 ↔ 83)	DEF
29.5 (84) ↔ Max. WARM	FOOT/DEF

PREPARATION:

(a) Set to the actuator check mode (See page DI–866).

(b) Press the DEF switch and change to step operation.

CHECK:

Press the DEF switch in order and check the condition of air flow mode.

OK:

The mode changes with the change in the temperature setting as shown in the table.

OK → **Proceed to next circuit inspection shown on problem symptoms table (See page DI–874).**

NG

2	Check air outlet control servomotor.

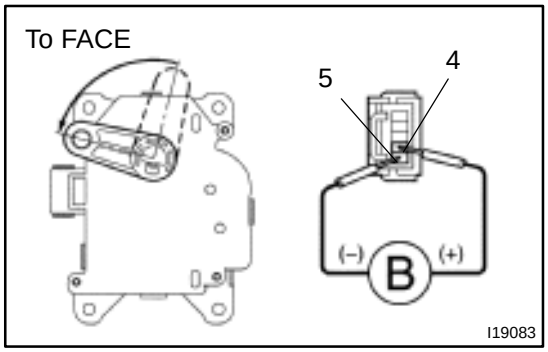

PREPARATION:
Remove air outlet control servomotor (See page AC–57).
CHECK:
Connect positive (+) lead to terminal 4 and negative (–) lead to terminal 5.
OK:
The lever moves smoothly to FACE position.

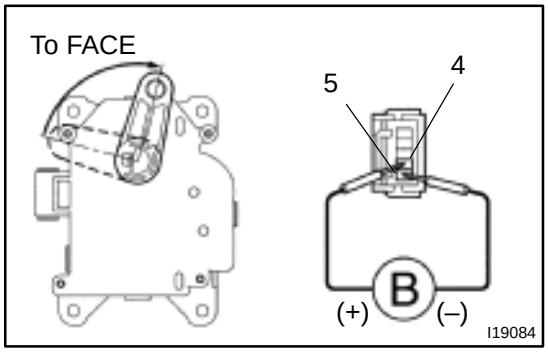

CHECK:
Connect positive (+) lead to terminal 5 and negative (–) lead to terminal 4.
OK:
The lever moves smoothly to DEF position.

NG → **Replace air outlet servomotor.**

OK

3	Check for open and short in harness and connector between A/C amplifier and air outlet servomotor (See page IN–41).

NG → **Repair or replace harness or connector.**

OK

Check and replace A/C amplifier.

DI7SI–01

IG Power Source Circuit

CIRCUIT DESCRIPTION

This is the power source for the A/C amplifier (contains the ECU) and servomotors, etc.

WIRING DIAGRAM

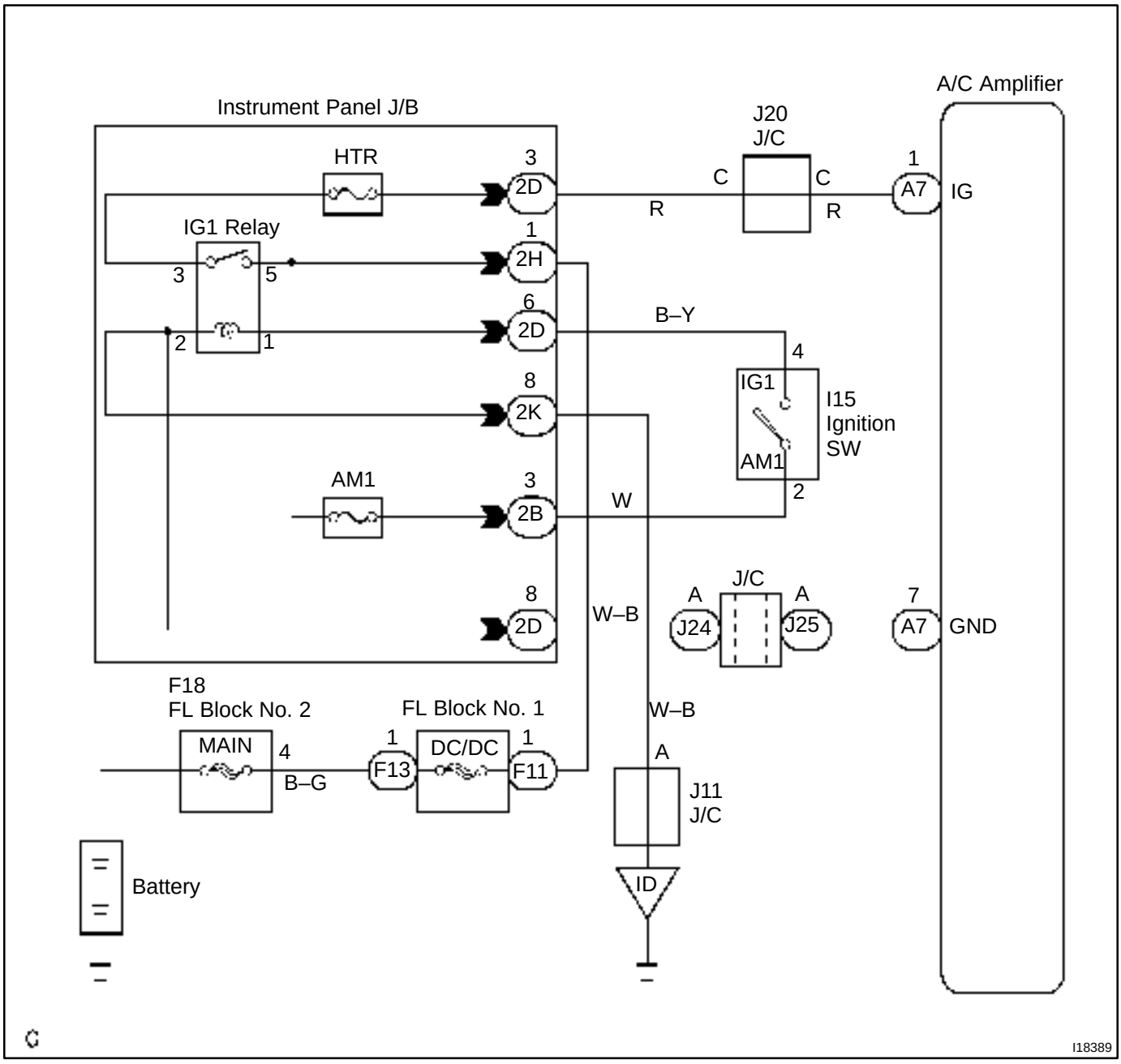

INSPECTION PROCEDURE

1	Check voltage between terminals IG and GND of A/C amplifier connector.

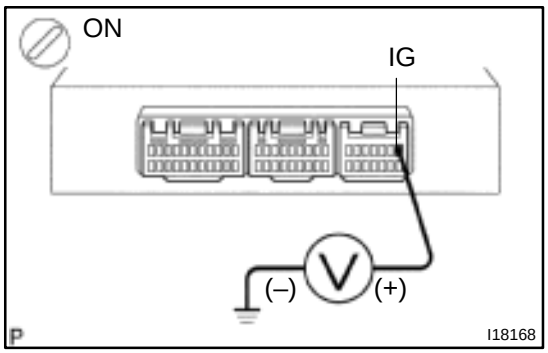

PREPARATION:

(a) Remove center cluster module control with connectors still connected.

(b) Turn ignition switch ON.

CHECK:

Measure voltage between terminals IG and GND of A/C amplifier.

OK:

Voltage : 10 – 14 V

OK	Proceed to next circuit inspection shown on problem symptoms table (See page DI–874).

NG

2	Check continuity between terminal GND of A/C amplifier and body ground.

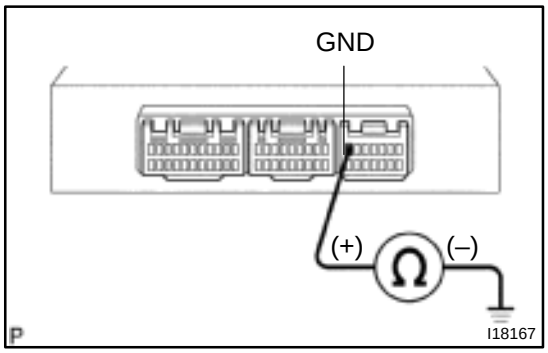

CHECK:

Measure resistance between terminal GND of A/C amplifier and body ground.

OK:

Resistance : Below 1 Ω

NG	Repair or replace harness or connector.

OK

3	Check HTR fuse.

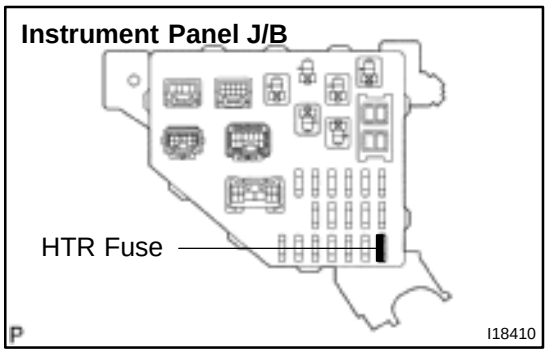

PREPARATION:
Remove HTR fuse from instrument panel J/B.
CHECK:
Check continuity of HTR fuse.
OK:
Continuity exists.

NG → **Check for shot in all the harness and components connected to the HTR fuse.**

OK

Check and repair harness and connector between A/C amplifier and battery.

DI7SJ–01

Back Up Power Source Circuit

CIRCUIT DESCRIPTION

This is the back–up power source for the A/C amplifier. Power is supplied even when the ignition switch is off.

WIRING DIAGRAM

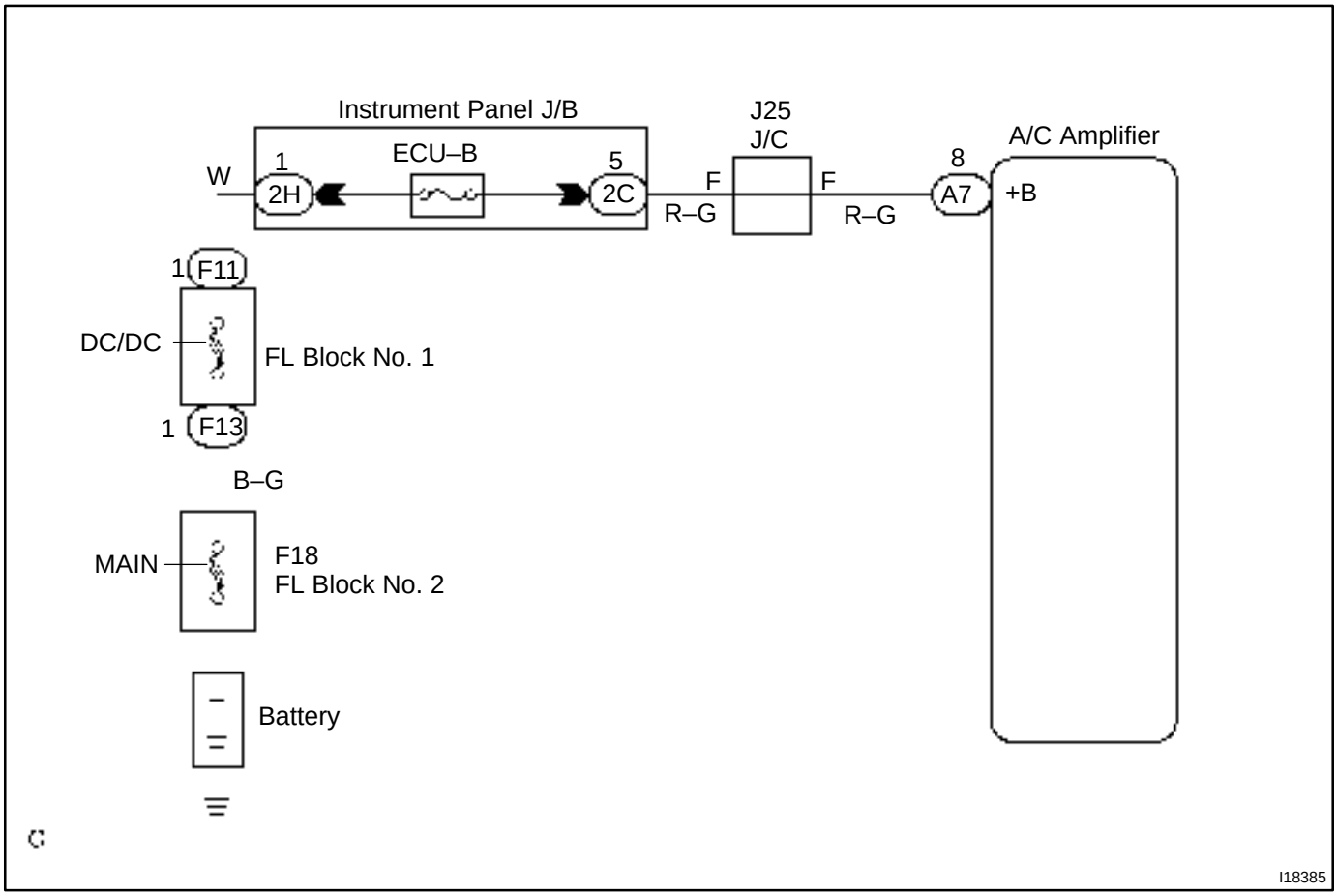

INSPECTION PROCEDURE

1	**Check voltage between terminal +B of A/C amplifier connector and body ground.**

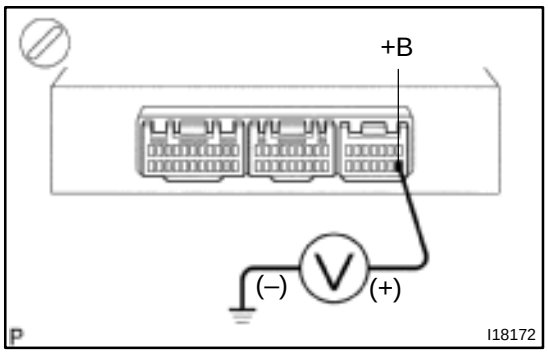

PREPARATION:
Remove A/C amplifier with connectors still connected.
CHECK:
Measure voltage between terminal +B of A/C amplifier connector and body ground.
OK:

Voltage : 10 – 14 V

OK → **Proceed to next circuit inspection shown on problem symptoms table (See page DI–874).**

NG

2	**Check ECU–B fuse.**

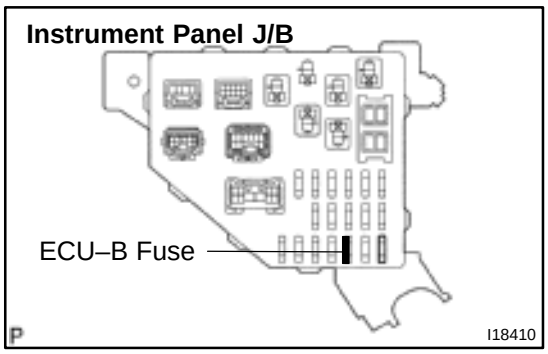

PREPARATION:
Remove ECU–B fuse from instrument panel J/B.
CHECK:
Check continuity of ECU–B fuse.
OK:

Continuity exists.

NG → **Check for short in all the harness and components connected to the ECU–B fuse (See page IN–41).**

OK

Check and repair harness and connector between A/C amplifier and battery.

DI7SK–01

Heater Main Relay Circuit

CIRCUIT DESCRIPTION

The heater main relay is switched on by signals from the A/C amplifier. It supplies power to the blower motor.

WIRING DIAGRAM

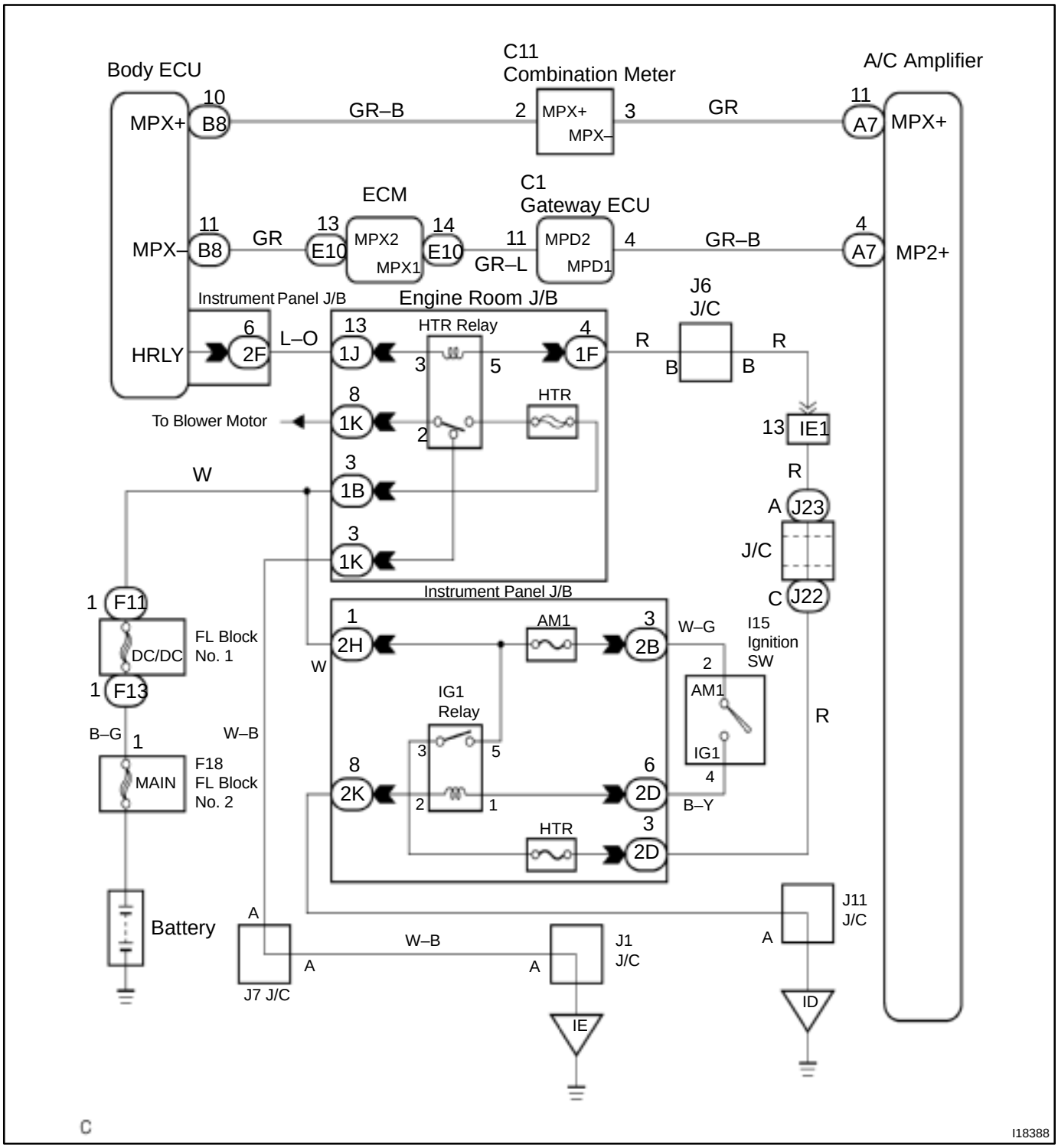

INSPECTION PROCEDURE

1	Check heater main relay.

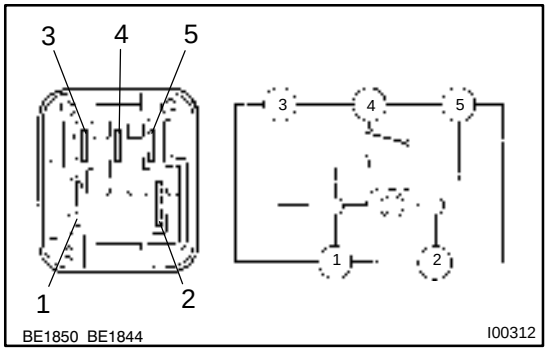

PREPARATION:
Remove heater main relay from engine room J/B.
CHECK:
Check continuity between each pair of terminals of heater main relay shown below.
OK:

Tester connection	Specified condition
1 – 4	No continuity
2 – 4	Continuity
3 – 5	62.5 – 90.9 Ω

PREPARATION:
Apply battery positive voltage between terminals 3 and 5.
CHECK:
Check continuity between each pair of terminal shown below.
OK:

Tester connection	Specified condition
1 – 2	Continuity
2 – 4	No continuity

NG → **Replace hater main relay.**

OK

2	Check HTR fuse

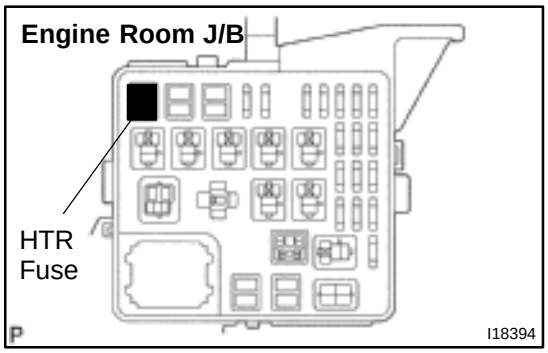

PREPARATION:
Remove HTR fuse from engine room J/B.
CHECK:
Check continuity of HTR fuse.
OK:

Continuity exists.

NG → **Check for short in all the harness and components connected to the HTR fuse (See page IN–41).**

OK

3	**Check harness and connector between heater main relay and body ground, heater main relay and body ECU (See page IN–41).**

NG → **Check and replace harness and connector.**

OK

Check multiplex communication system (See page DI–750).

DI7SL–01

Blower Motor Circuit

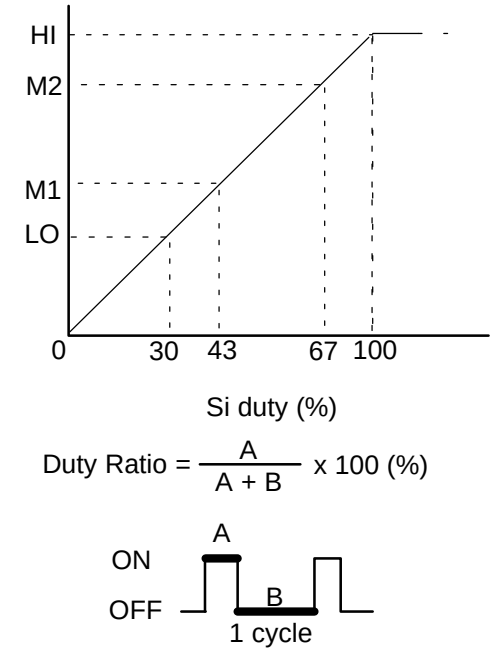

CIRCUIT DESCRIPTION

The blower motor is operated by signals from the A/C amplifier. Blower motor speed signals are transmitted by changes in the Duty Ratio.

Duty Ratio

The duty ratio is the ratio of the period of continuity in one cycle. For example, if A is the period of continuity in one cycle, and B is the period of non–continuity, then.

WIRING DIAGRAM

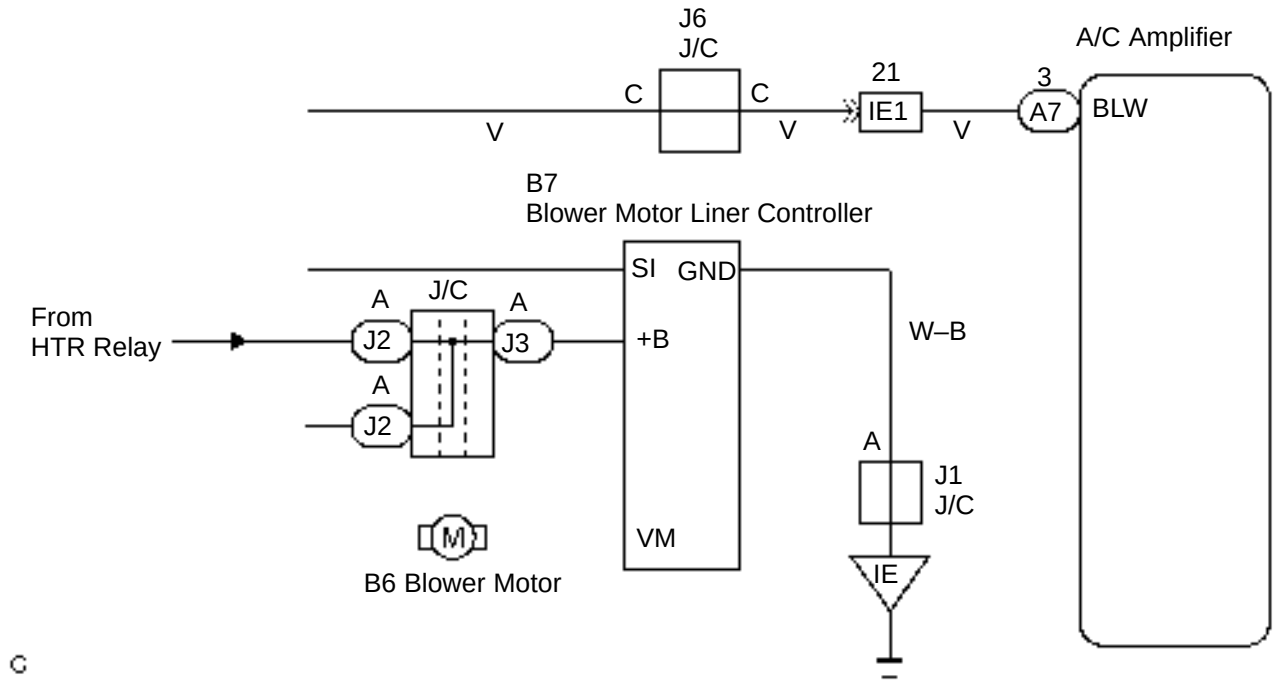

I18383

INSPECTION PROCEDURE

1	**Check blower motor.**

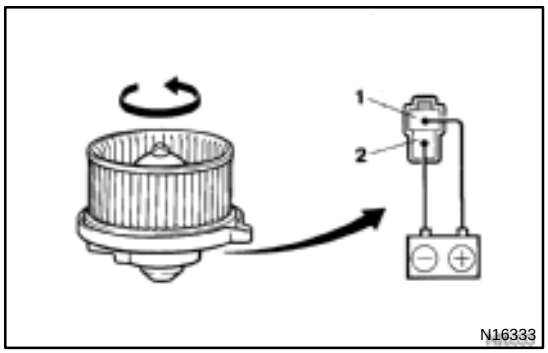

PREPARATION:
Remove blower motor (See page AC–33).
CHECK:
Connect positive (+) lead connected to terminal 2 of blower motor connector, negative (–) lead to terminal 1.
OK:
Blower motor operates smoothly.

NG → **Replace blower motor.**

OK

2	**Check harness and connector between battery and blower motor, blower motor and body ground (See page IN–41).**

NG → **Repair or replace harness or connector.**

OK

3	**Check harness and connector between blower motor linear controller and A/C amplifier (See page IN–41).**

NG → **Repair or replace harness or connector.**

OK

4	**Check A/C amplifier (See page IN–41).**

NG → **Replace A/C amplifier.**

OK

Replace blower motor linear controller.

DI7SM–01

Compressor Circuit

CIRCUIT DESCRIPTION

A/C amplifier switches the A/C magnetic clutch relay ON, thus turning the A/C compressor magnetic clutch ON.

WIRING DIAGRAM

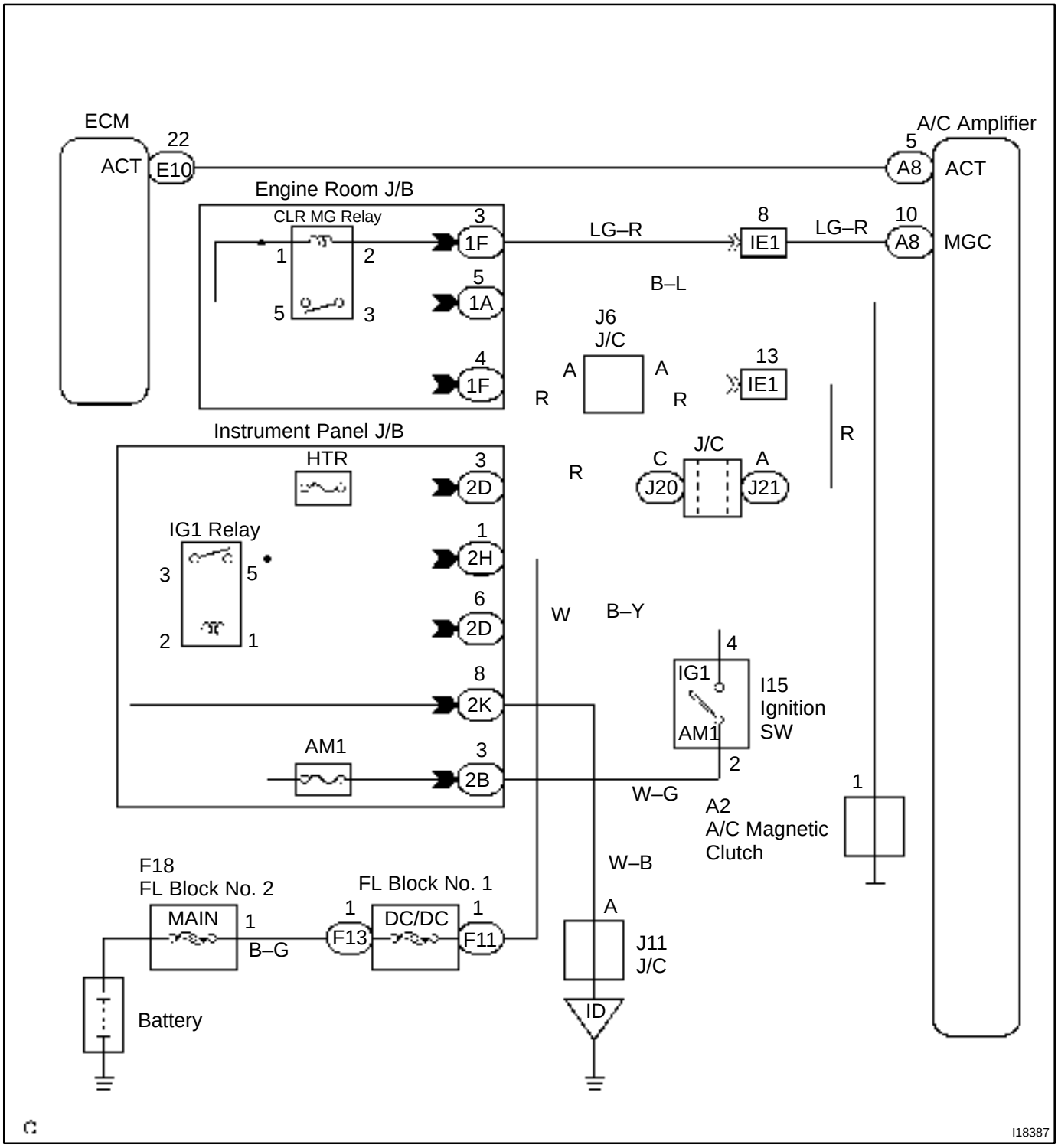

INSPECTION PROCEDURE

1	**Check voltage between terminal MGC of A/C amplifier and body ground.**

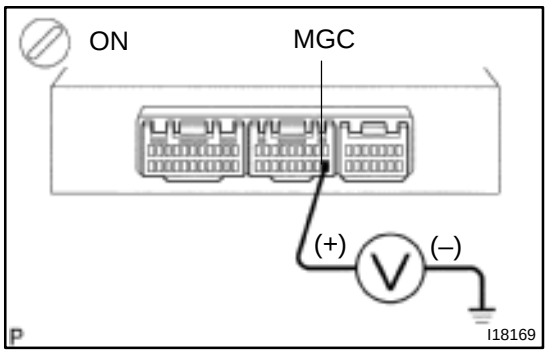

CHECK:

(a) Start engine.
(b) Push AUTO SW.
(c) Measure voltage between terminal MGC of A/C amplifier connector and body ground when A/C switch is On and OFF.

OK:

A/C switch	Voltage
ON	Below 0.7 V
OFF	10 – 14 V

OK	**Go to step 5.**

NG

2	**Check magnetic clutch relay.**

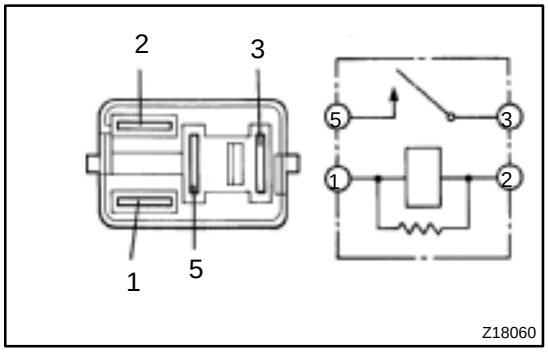

PREPARATION:

Remove magnetic clutch relay from engine room J/B.

CHECK:

Check continuity between each pair of terminals shown below of magnetic clutch relay.

OK:

Tester connection	Specified condition
1 – 2	62.5 – 90.9 Ω
3 – 5	No continuity

PREPARATION:

Apply battery positive (+) voltage between terminals 1 and 2.

CHECK:

Check continuity between terminals 3 and 5.

OK:

Continuity exists.

NG	**Replace magnetic clutch relay.**

OK

3	Check A/C magnetic clutch.

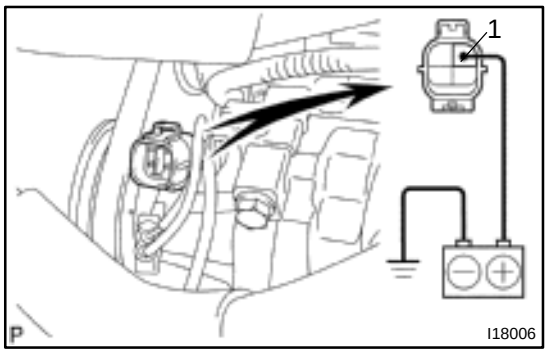

PREPARATION:
Disconnect magnetic clutch connector.
CHECK:
Connect positive (+) lead connected to battery to magnetic clutch connector terminal 3 and negative (–) lead to body ground.
OK:
Magnetic clutch is energized.

NG	Repair A/C magnetic clutch.

OK

4	Check harness and connector between magnetic clutch relay and A/C amplifier, A/C compressor and body ground (See page IN–41).

NG	Repair or replace harness or connector.

OK

Proceed to next circuit inspection shown on problem symptons table (See page DI–874).

5	Check voltage between terminal ACT of A/C amplifier connector side and body ground.

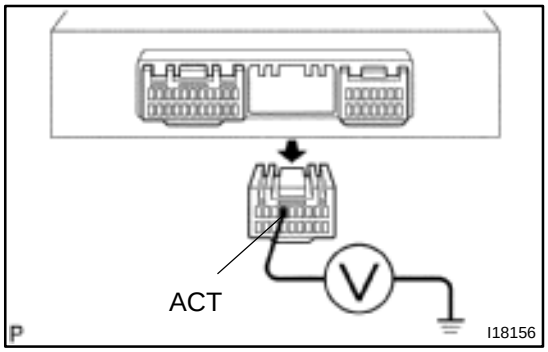

PREPARATION:
(a) Disconnect A/C amplifier connector.
(b) Turn ignition switch ON.
CHECK:
Check voltage between terminal ACT of A/C amplifier harness side connector.
OK:
Voltage : 10 – 14 V

NG	Check and replace engine ECU.

OK

6	Check voltage between terminal ACT of A/C amplifier connector and body ground.

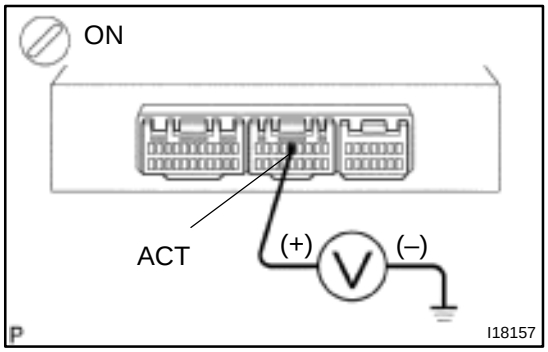

PREPARATION:

(a) Remove center cluster module control with connector still connected.

(b) Start the engine and push AUTO switch.

CHECK:

Check the voltage between terminal ACT of A/C amplifier connector and body ground when magnetic clutch is ON and OFF by A/C switch.

OK:

Magnetic clutch	Voltage
ON	10 – 14 V
OFF	Below 1.0 V

NG → **Check and replace A/C amplifier.**

OK ↓

7	Check harness and connector between magnetic clutch relay and A/C amplifier (See page IN–41).

NG → **Repair or replace harness or connector.**

OK ↓

Proceed to next circuit inspection shown on problem symptoms table (See page DI–874).

DI7SN–01

Water Pump Circuit

CIRCUIT DESCRIPTION

This is hte power source for the water pump motor.

WIRING DIAGRAM

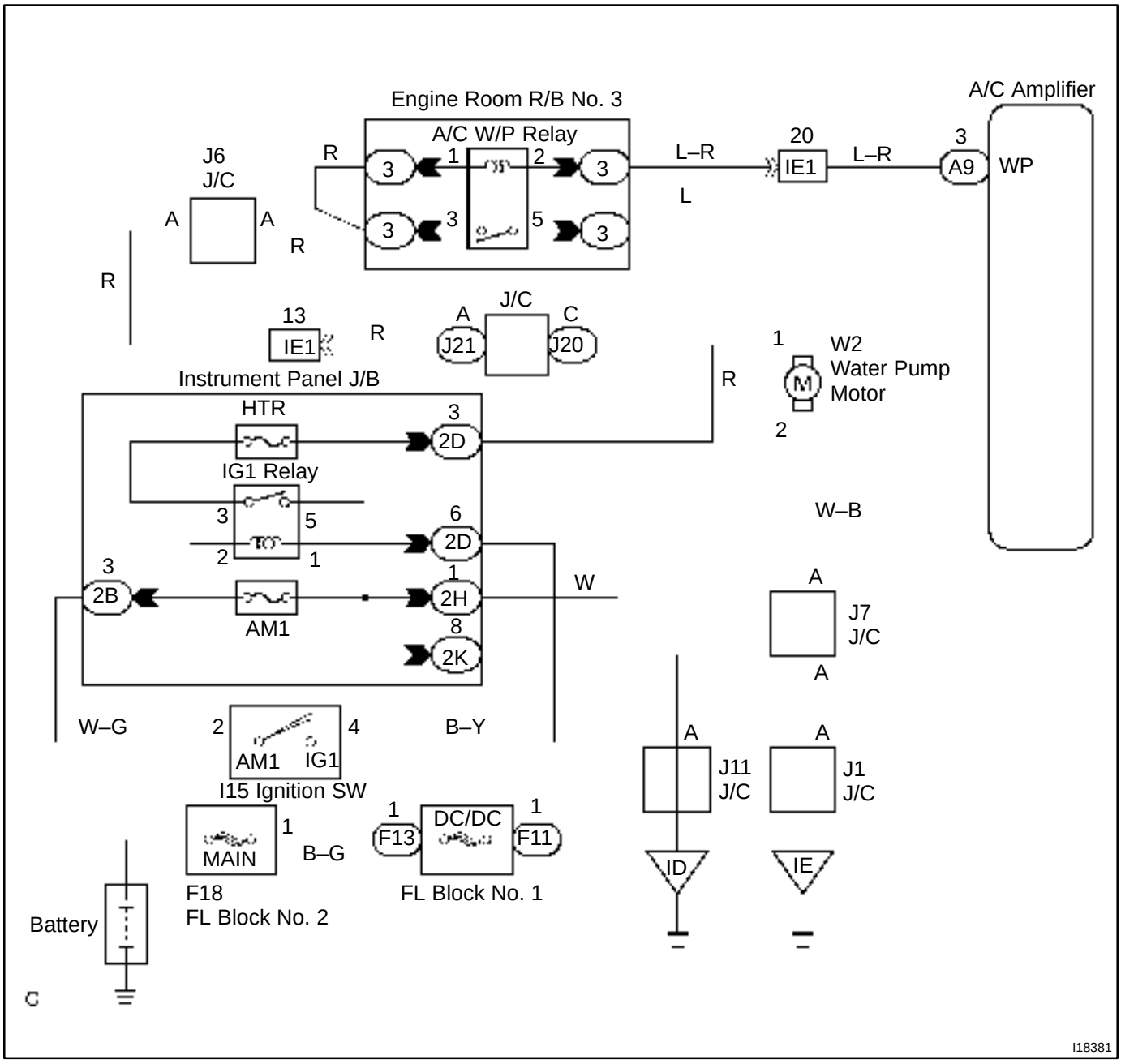

INSPECTION PROCEDURE

1	Check voltage between terminal WP of A/C amplifier and body ground.

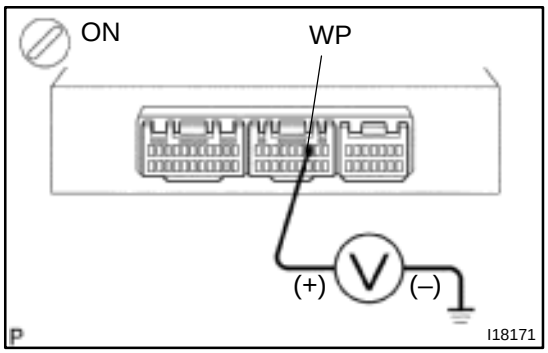

PREPARATION:

(a) Remove the center cluster module control with connectors still connected.
(b) Start engine.
(c) Operate blower motor.

CHECK:

Measure voltage between terminal WP of A/C amplifier and body ground when each condition as shown in the chart.

OK:

condition	Voltage
Engine running	10 – 14 V
Engine stop	Below 1.0 V

OK → **Proceed to next circuit inspection shown on problem symptoms table (See page DI–874).**

NG

2	Check A/C water pump relay.

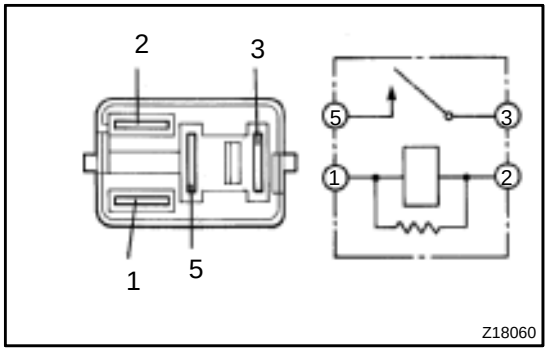

PREPARATION:

Remove the A/C water pump relay from engine room R/B NO. 3.

CHECK:

Check continuity between each pair of terminals shown below of magnetic clutch relay.

OK:

Tester connection	Specified condition
1 – 2	62.5 – 90.9 Ω
3 – 5	No continuity

PREPARATION:

Apply battery positive (+) voltage between terminals 1 and 2.

CHECK:

Check continuity between terminals 3 and 5.

OK:

Continuity exists.

NG → **Replace magnetic clutch relay.**

OK

3	**Check water pump motor.**

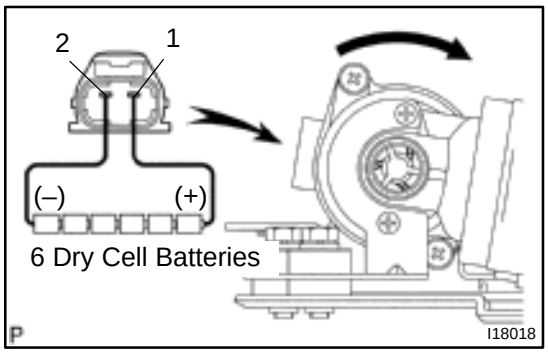

PREPARATION:

Remove the water pump (See page AC–55).

CHECK:

Connect the positive (+) lead from the 6 dry cell batteries (7 – 10.5 V) to terminal 1 and negative (–) lead to terminal 2, then check that the motor operation.

NOTICE:

- **Do not apply battery voltage.**
- **Operate without water should be done within 10 sec.**

OK:

Motor operation smoothly.

NG → **Replace water pump.**

OK

4	**Check harness and connector between water pump motor and A/C amplifier, water pump motor and body ground (See page IN–41).**

NG → **Repair or replace harness or connector.**

OK

Check and replace A/C amplifier.

DI7SO–01

Converter Circuit

WIRING DIAGRAM

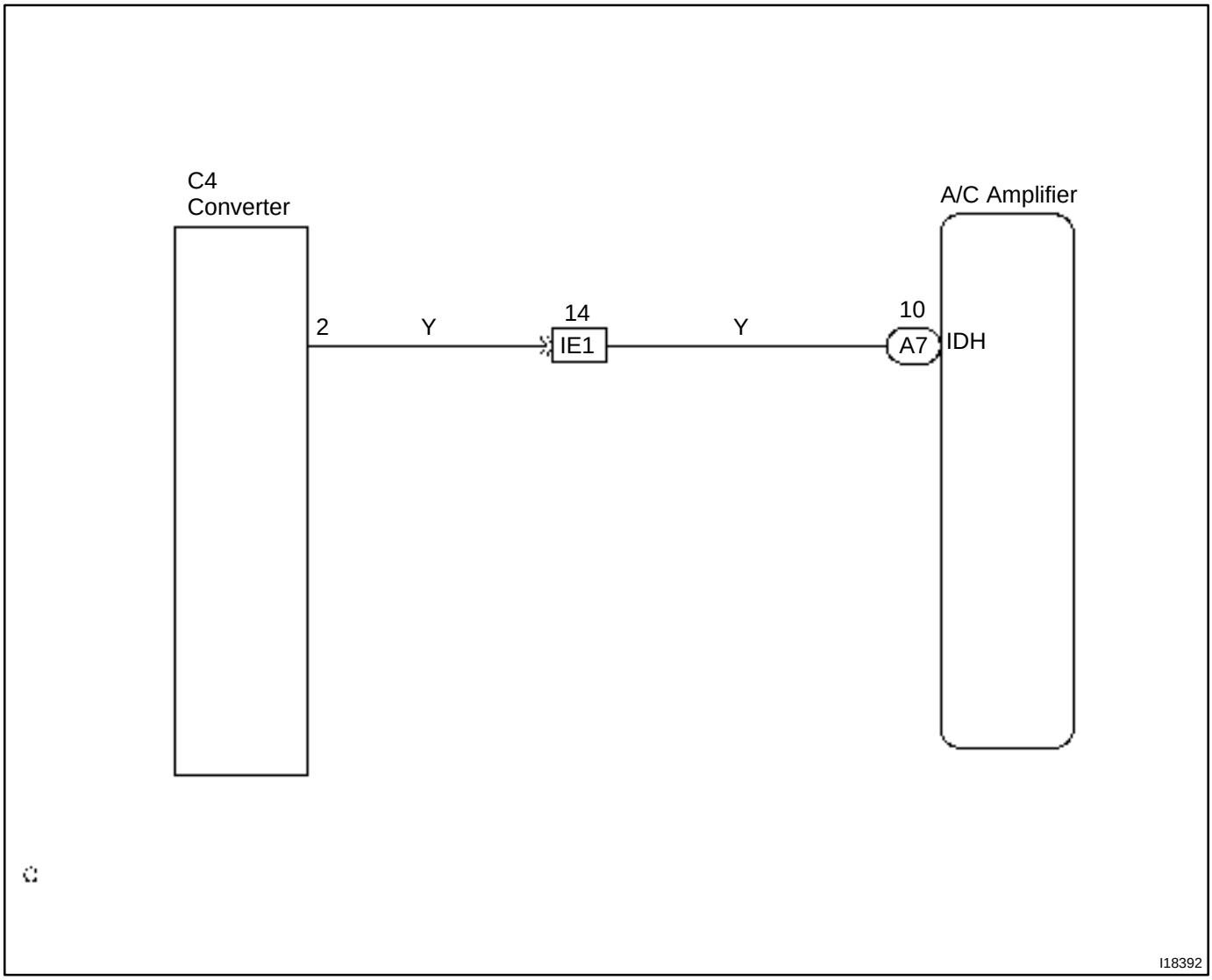

INSPECTION PROCEDURE

1	**Check voltage between terminal IDH of A/C amplifier and body ground.**

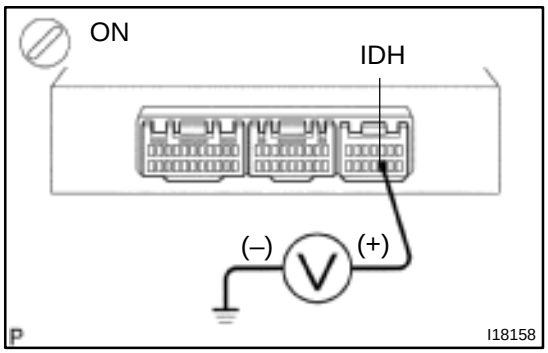

PREPARATION:
Remove the center cluster module control with connectors still connected.
CHECK:
(a) Turn ignition switch ON.
(b) Turn light control switch OFF.
(c) Turn rear defogger switch OFF.
(d) Measure voltage between terminal IDH of A/C amplifier.
OK:
Voltage: Below 1.0 V

OK	**Proceed to next circuit inspection shown on problem symptoms table (See page DI–874).**

NG

2	**Check voltage between terminal IDH of A/C amplifier and body ground.**

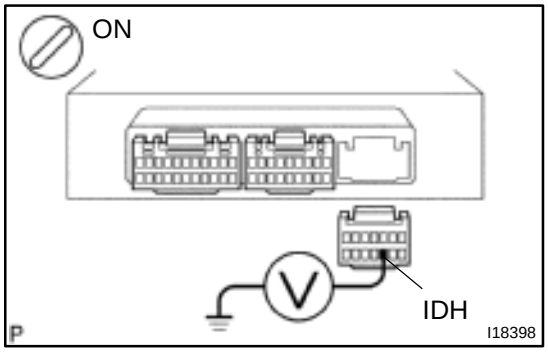

PREPARATION:
Disconnect the connector from A/C amplifier.
CHECK:
(a) Turn ignition switch ON.
(b) Turn light control switch OFF.
(c) Turn rear defogger switch OFF.
(d) Measure voltage between terminal IDH of A/C amplifier on wire harness side connector.
OK:
Voltage: Below 1.0 V

OK	**Check and replace A/C amplifier.**

NG

3	**Check harness and connector between A/C amplifier and converter (See page IN–41).**

NG → **Repair and replace harness and connector.**

OK

Check and replace converter.

DI7SP–01

PTC Heater Circuit (Quick Heater)

CIRCUIT DESCRIPTION

A/C amplifier switches the HTR3 relay ON by signal from the A/C amplifier. It supplies power to PTC heater (Quick heater).

WIRING DIAGRAM

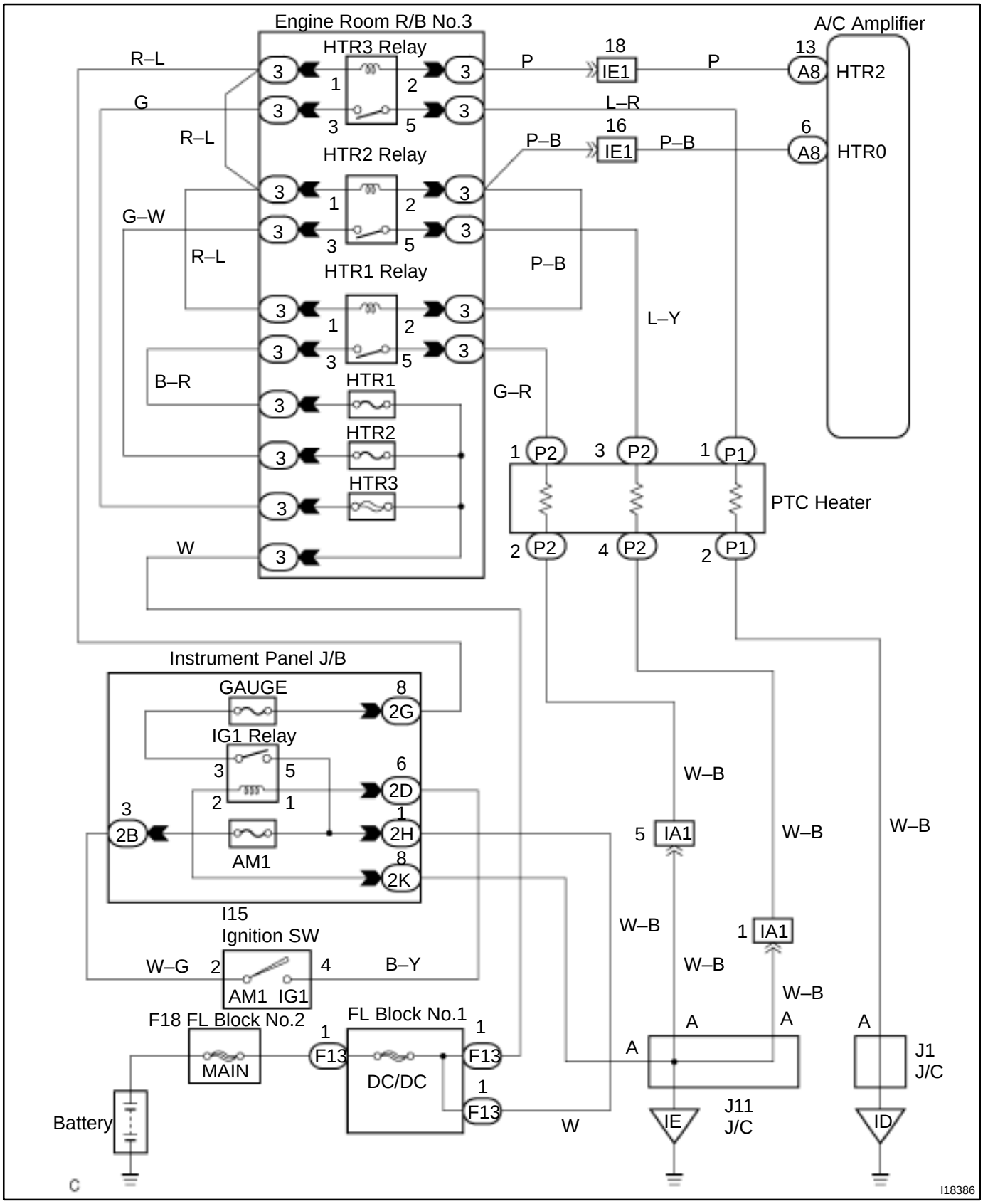

INSPECTION PROCEDURE

1	**Check converter circuit (See page DI–934).**

2	**Check voltage between terminal HTR2 of A/C amplifier and body ground.**

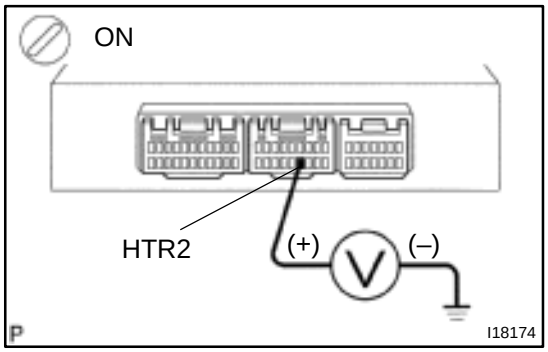

PREPARATION:

Remove the center cluster module control with connectors still connected.

CHECK:

(a) Start engine.
(b) Set temperature control switch on ”MAX. WARM” position.
(c) Set blower switch on ”HI” position.
(d) Turn light control switch OFF.
(e) Turn defogger switch OFF.
(f) Check voltage between terminal HTR2 of A/C amplifier and body ground at each conditions, as shown in the chart.

OK:

Condition	Voltage
• Air flow selector: FOOT • Water temp. : Below 65˚C (149˚F)	Below 0.7 V
• Air flow selector: FOOT/DEF • Water temp. : Below 60˚C (140˚F)	Below 0.7 V
• Air flow selector: DEF • Water temp. : 75˚C (167˚F)	Below 0.7 V

OK	**Go to step 6.**

NG

3	Check HTR3 fuses.

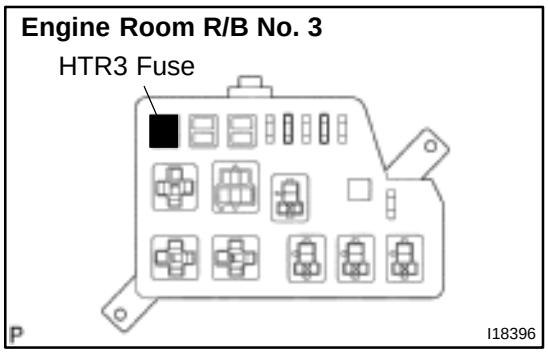

PREPARATION:
Remove the HTR3 fuse from engine room R/B No. 3.
CHECK:
Check continuity of HTR1 and HTR2 fuses.
OK:
Continuity exists.

NG → **Check for short in all the harness and components connected to the HTR1 and HTR2 fuses (See attached wiring diagram).**

OK

4	Check HTR3 relays.

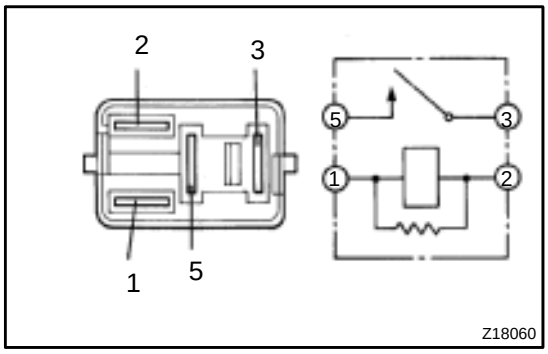

PREPARATION:
Remove the HTR3 relays from engine room relay block No. 3.
CHECK:
Check continuity between each pair of terminals shown below of magnetic clutch relay.
OK:

Tester connection	Specified condition
1 – 2	62.5 – 90.9 Ω
3 – 5	No continuity

PREPARATION:
Apply battery positive (+) voltage between terminals 1 and 2.
CHECK:
Check continuity between terminals 3 and 5.
OK:
Continuity exists.

NG → **Replace HTR3 relay.**

OK

5	**Check harness and connector between A/C amplifier and HTR1 and HTR2 fuses (See page IN–41).**

NG → **Check and replace harness and connector.**

OK

Check and replace A/C amplifier.

6	**Check PTC heater.**

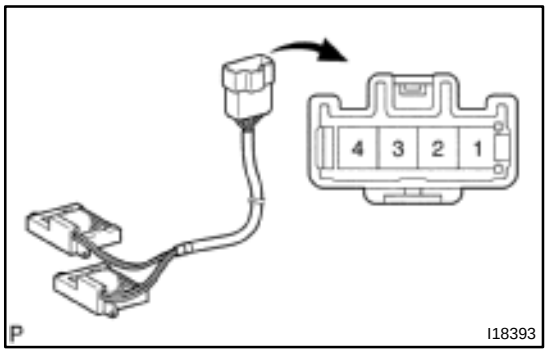

PREPARATION:
Remove the heater radiator (See page AC–51).
CHECK:
Check continuity between terminals of PTC heater connector, as shown in the chart.
OK:

Tester connection	Result
1 – 2	Continuity
3 – 4	Continuity

NG → **Replace heater radiator.**

OK

Check harness and connector between PTC heater and HTR1, HT2 relays, PTC heater and body ground (See page IN–41).

DI7SQ–01

PTC Heater Circuit (Heater Radiator)

CIRCUIT DESCRIPTION

A/C amplifier switches the HTR1 relay and HTR2 relay ON by signal from the A/C amplifier. It supplies power to PTC heater (Heater radiator).

WIRING DIAGRAM

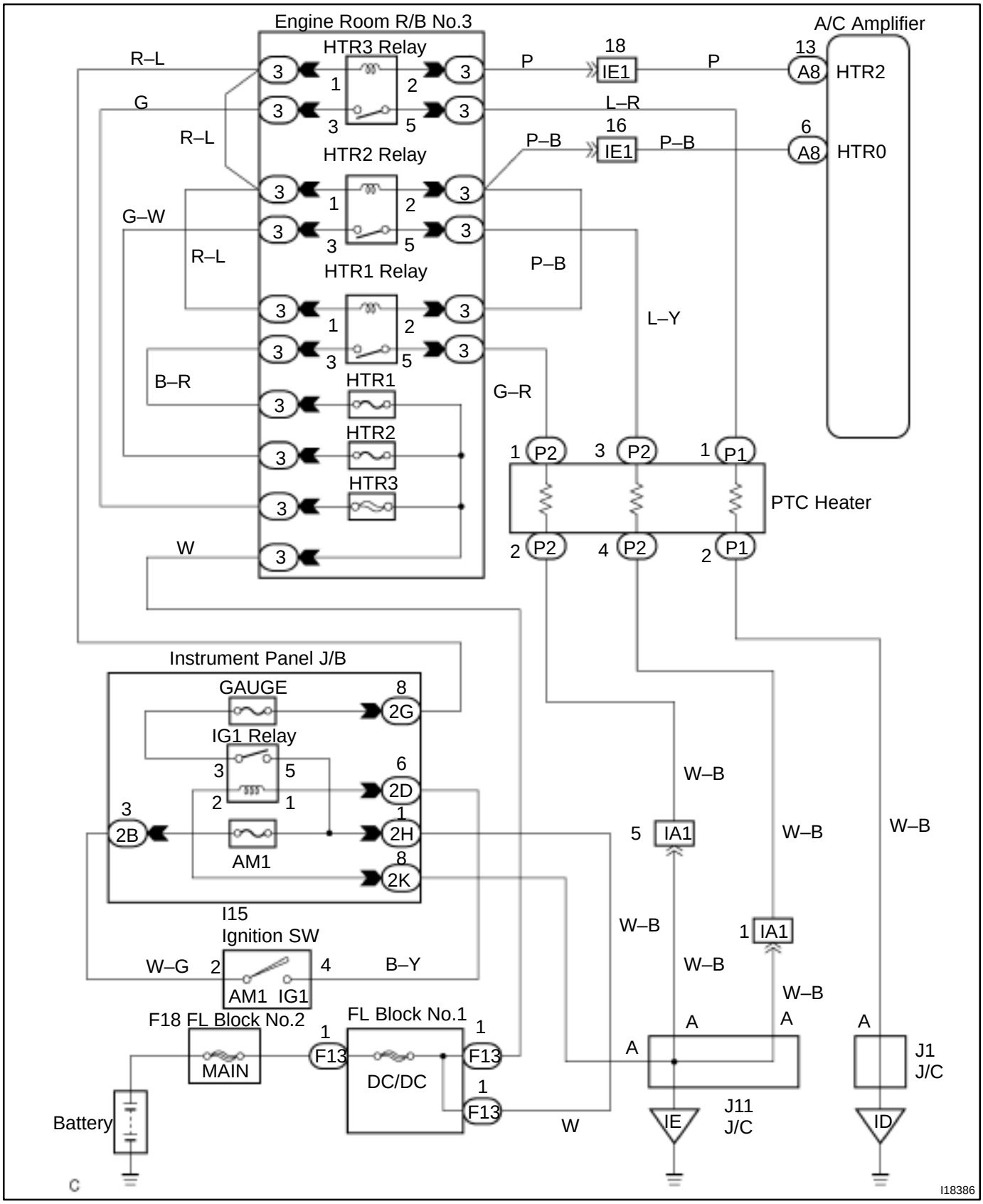

INSPECTION PROCEDURE

1	**Check converter circuit (See page DI–934).**

2	**Check voltage between terminal HTR0, of A/C amplifier and body ground.**

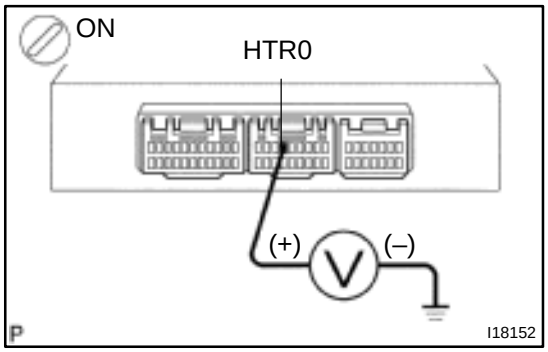

PREPARATION:
Remove the center cluster module control with connectors still connected.

CHECK:
(a) Start engine.
(b) Set temperature control switch on ”MAX WARM” position.
(c) Set blower switch on ”HI” position.
(d) Turn light control switch to OFF.
(e) Turn defogger switch OFF.
(f) Check voltage between terminal HTR0 of A/C amplifier and body ground at each conditions, as shown in the chart.

OK:

Condition	Voltage
• Air flow selector: FOOT • Water temp. : Below 60˚C (140˚F)	Below 0.7 V
• Air flow selector: FOOT/DEF • Water temp. : Below 50˚C (122˚F)	Below 0.7 V

OK	**Go to step 6.**

NG

3	Check HTR1 and HTR2 fuses.

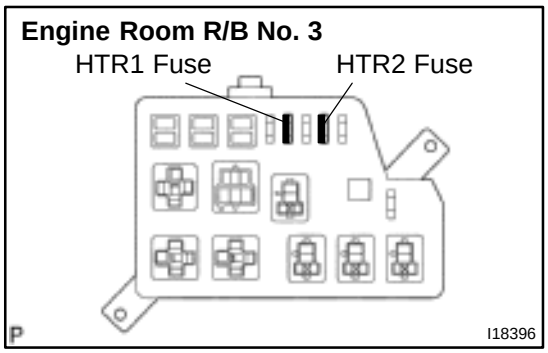

PREPARATION:
Remove the HTR1 and HTR2 fuses from engine room R/B NO. 3.
CHECK:
Check continuity of HTR1 and HTR2 fuses.
OK:
Continuity exists.

NG → **Check for short in all the harness and components connected to the HTR1 and HTR2 fuses (See attached wiring diagram).**

OK

4	Check HTR1 and HTR2 relays.

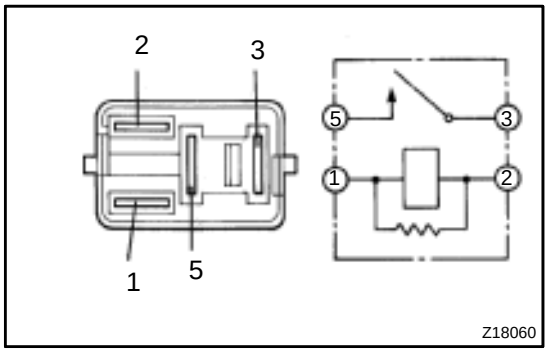

PREPARATION:
Remove the HTR1 and HTR2 relays from engine room relay block NO. 3.
CHECK:
Check continuity between each pair of terminals shown below of magnetic clutch relay.
OK:

Tester connection	Specified condition
1 – 2	62.5 – 90.9 Ω
3 – 5	No continuity

PREPARATION:
Apply battery positive (+) voltage between terminals 1 and 2.
CHECK:
Check continuity between terminals 3 and 5.
OK:
Continuity exists.

NG → **Replace HTR1 and (or) HTR2 relay.**

OK

5	**Check harness and connector between A/C amplifier and HTR3 fuse (See page IN–41).**

NG → **Check and replace harness and connector.**

OK

Check and replace A/C amplifier.

6	**Check PTC heater (Heater Radiator).**

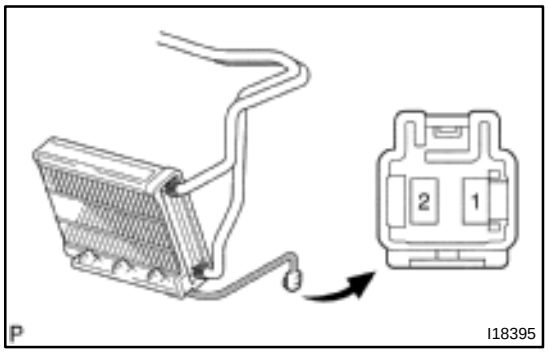

PREPARATION:
Remove the heater radiator (See page AC–27).
CHECK:
Check continuity between terminals of PTC heater connector.
OK:
Continuity exists.

NG → **Replace heater radiator.**

OK

Check harness and connector between PTC heater and HTR3 relay, PTC heater and body ground (See page IN–41).

DI7SR–01

Radiator Fan and Condenser Fan Circuit

CIRCUIT DESCRIPTION

The electric fan speed is controlled as described below, in accordance with the following signals:

- ON/OFF signal of A/C switch
- ON/OFF signal detected by the pressure switch (that cut out at medium pressure)
- ON/OFF signal detected by water temperature switch

WIRING DIAGRAM

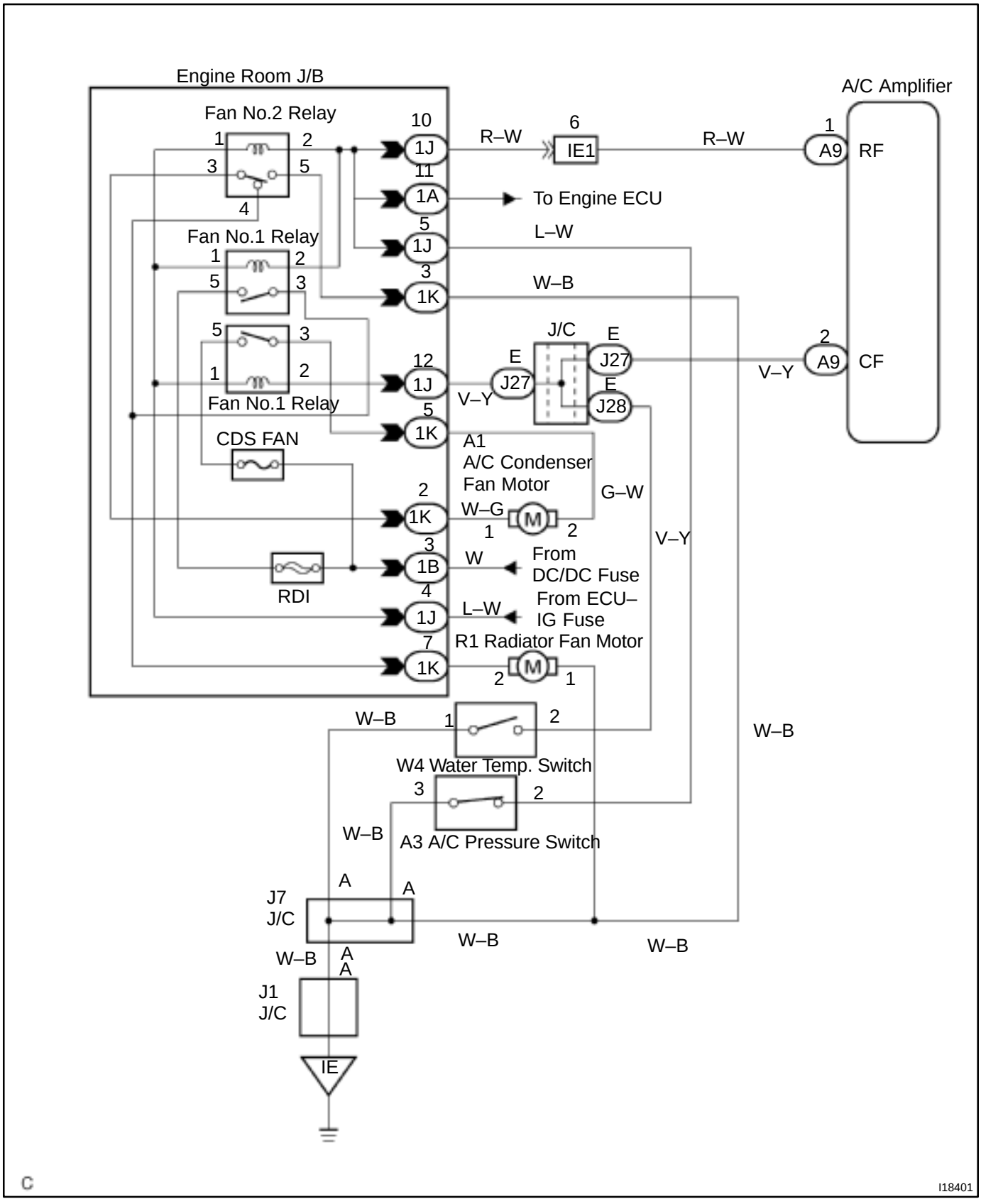

INSPECTION PROCEDURE

1	**Check voltage between terminals RF, CF of A/C amplifier and body ground.**

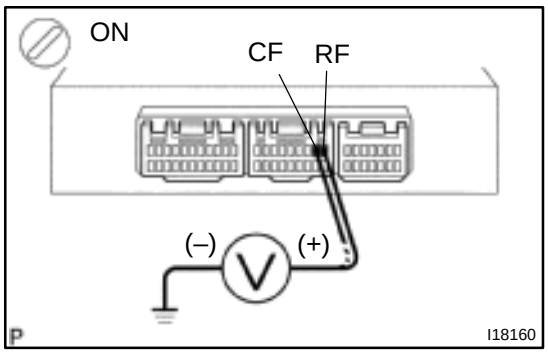

PREPARATION:

Remove the center cluster module control with connectors still connected.

CHECK:

(a) Start engine.
(b) Turn A/C switch ON.
(c) Measure voltage between terminal RF, CF of A/C amplifier and body ground at each conditions as shown in the chart.

OK:

Terminal	Condition	Voltage
RF ↔ Body ground	Water temp.: Below 90°C (194 °F) Refrigerant pressure: Below 1,520 kPa (15.5 kgf/cm^2, 220 psi)	10 – 14 V
	Water temp.: Above 90°C (194 °F) Refrigerant pressure: Above 1,520 kPa (15.5 kgf/cm^2, 220 psi)	Below 1.0 V
CF ↔ Body ground	A/C switch: ON	Below 1.0 V
	A/C switch: OFF	10 – 14 V

OK → **Go to step 4.**

NG

2	**Check Fan No. 1, No. 2 and No. 3 relays (See page AC–65).**

NG → **Replace faulty relay**

OK

3	**Check RDI fuse and CDS fuse.**

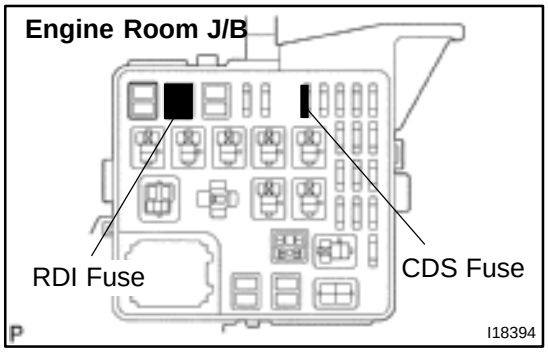

PREPARATION:
Remove RDI fuse and CDS fuse from engine room J/B.
CHECK:
Check continuity of RDI fuse and CDS fuse.
OK:
Continuity exists.

NG → **Check for short in all the harness and components connected to the RDI fuse (See attached wiring diagram).**

OK →

Check harness and connector between A/C control amplifier and battery (See page IN–41).

4	**Check fan motor operation (See page AC–67).**

NG → **Replace fan motor.**

OK →

5	**Check pressure switch (See page AC–62).**

NG → **Replace pressure switch.**

OK →

6	Check engine coolant temp. switch (See page AC–84).

NG → Replace water temp. switch.

OK

7	Check harness and connector between A/C amplifier and pressure switch, pressure switch and body ground (See page IN–41).

NG → Repair and replace harness and connector.

OK

8	Check harness and connector between A/C amplifier and water temp. switch, water temp. switch and body ground (See page IN–41).

NG → Repair and replace harness and connector.

OK

Check and replace A/C amplifier.

CO/HC

EM167–04

INSPECTION

HINT:

This check is used only to determine whether or not the idle CO/HC complies with regulations.

1. INSTALL CONDITIONS

(a) Air cleaner installed
(b) Air pipes and hoses of air induction system connected
(c) All accessories switched OFF
(d) All vacuum lines properly connected
(e) EFI system wiring connectors fully plugged
(f) Ignition timing check correctly
(g) Transmission in parking range
(h) Tachometer and CO/HC meter calibrated by hand

2. ACTIVATE INSPECTION MODE AND WARM UP ENGINE (See page IN–10)

3. RACE ENGINE AT 2,250 RPM FOR APPROX. 180 SECONDS

HINT:

At the accelerator opening angle of 60% or more, the engine speed is controlled at 2,250 rpm.

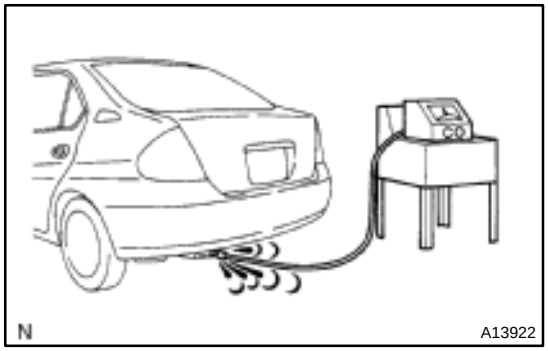

4. INSERT CO/HC METER TESTING PROBE AT LEAST 40 cm (1.3 ft) INTO TAILPIPE DURING IDLING

5. IMMEDIATELY CHECK CO/HC CONCENTRATION AT IDLE AND/OR 2,250 RPM

Complete the measuring with 3 minutes.

HINT:

When doing the 2 mode (idle and 2,250 rpm) test, these measurement order prescribed by the applicable local regulations.

6. STOP ENGINE

If the CO/HC concentration does not comply with regulations, troubleshoot in the order given below.

- Check heated oxygen sensor operation.
  (See page DI–44)
- See the table below for possible causes, and then inspect and correct the applicable causes if necessary.

CO	HC	Problems	Causes
Normal	High	Rough idle	1. Faulty ignitions: • Incorrect timing • Fouled, shorted or improperly gapped plugs • Open or crossed high–tension cords 2. Incorrect valve clearance 3. Leaky intake and exhaust valves 4. Leaky cylinders
Low	High	Rough idle (Fluctuating HC reading)	1. Vacuum leaks: • PCV hoses • Intake manifold • Throttle body 2. Lean mixture causing misfire
High	High	Rough idle (Black smoke from exhaust)	1. Restricted air filter 2. Plugged PCV valve 3. Faulty EFI systems: • Faulty pressure regulator • Defective water temperature sensor • Defective air flow meter • Faulty ECM • Faulty injectors • Faulty throttle position sensor
Normal	High		1. Faulty HCAC: • Faulty VSV • Faulty actuator

COMPRESSION

INSPECTION

EM1IT–02

HINT:

If there is lack of power, excessive oil consumption or poor fuel economy, measure the compression pressure.

NOTICE:

The measurement of compression pressure should be performed in the Cranking Mode.

1. WARM UP AND STOP ENGINE

Allow the engine to warm up to normal operating temperature.

2. REMOVE AIR CLEANER ASSEMBLY

3. REMOVE IGNITION COIL (See page IG–6)

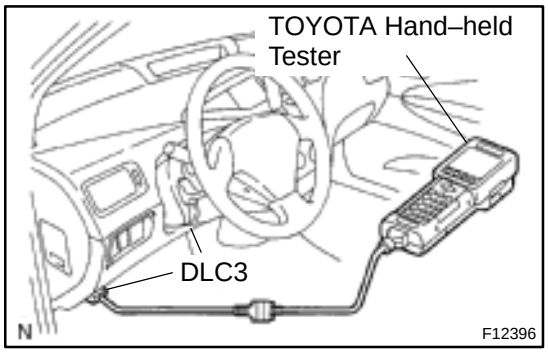

4. REMOVE SPARK PLUGS

5. CONNECT TOYOTA HAND–HELD TESTER

(a) Connect the TOYOTA hand–held tester to the DLC3.

(b) Select the cranking mode on the TOYOTA hand–held tester.

(c) Please refer TOYOTA hand–held tester operato's manual for further details.

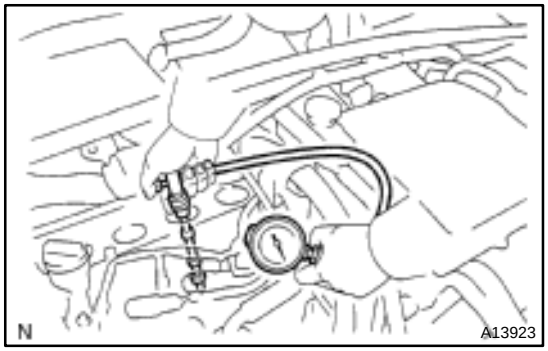

6. INSPECT CYLINDER COMPRESSION PRESSURE

(a) Insert a compression gauge into the spark plug hole.

(b) Fully open the throttle.

(c) While cranking the engine, measure the compression pressure.

HINT:

In the Cranking Mode, the engine speed is automatically controlled at 250 rpm and the throttle valve is also automatically set in fully–opened condition.

(d) Repeat steps (a) through (c) for each cylinder.

NOTICE:

This measurement must be done in as short a time as possible.

Compression pressure:
728 kPa (7.4 kgf/cm^2, 106 psi)
Minimum pressure:
534 kPa (5.4 kgf/cm^2, 77 psi)
Difference between each cylinder:
98 kPa (1.0 kgf/cm^2, 14 psi) or less

(e) If the cylinder compression in one more cylinders is low, pour a small amount of engine oil into the cylinder through the spark plug hole and repeat steps (a) through (c) for cylinders with low compression.

- If adding oil helps the compression, it is likely that the piston rings and/or cylinder bore are worn or damaged.
- If pressure stays low, a valve may be sticking or seating is improper, or there may be leakage past the gasket.

7. REINSTALL SPARK PLUGS

8. REINSTALL IGNITION COIL (See page IG–7)

VALVE CLEARANCE

ADJUSTMENT

EM169–02

HINT:

Inspect and adjust the valve clearance when the engine is cold.

1. REMOVE CYLINDER HEAD COVER

(See page EM–15)

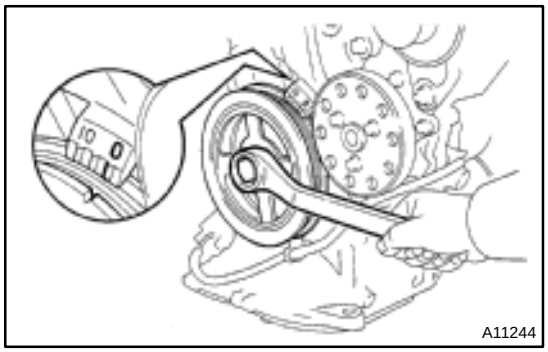

2. SET NO.1 CYLINDER TO TDC/COMPRESSION

(a) Turn the crankshaft pulley, and align its groove with the timing mark ”0” of the timing chain cover.

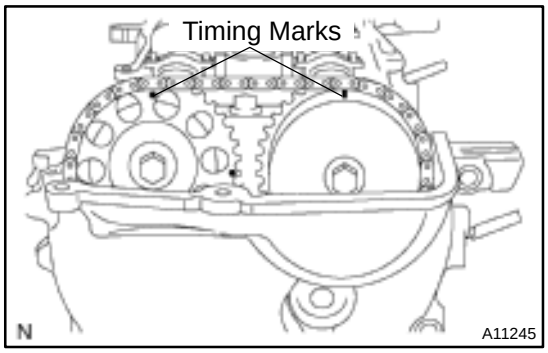

(b) Check that both timing marks on the camshaft timing sprocket and valve timing controller assembly are facing right upas shown in the illustration.

If not, turn the crankshaft 1 revolution (360˚) and align the marks as above.

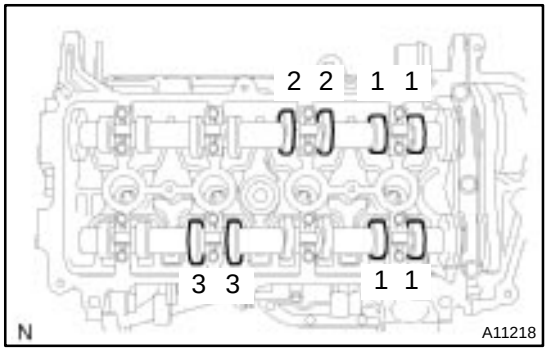

3. INSPECT VALVE CLEARANCE

(a) Check only the valves indicated.

- Using a feeler gauge, measure the clearance between the valve lifter and camshaft.
- Record the out–of–specification valve clearance measurements. They will be used later to determine the required replacement adjusting shim.

Valve clearance (Cold):

Intake: 0.17 – 0.23 mm (0.007 – 0.009 in.)

Exhaust: 0.27 – 0.33 mm (0.011 – 0.013 in.)

(b) Turn the crankshaft 1 revolution (360˚) and align the mark as above. (See procedure in step 2)

(c) Check only the valves indicated as shown. Measure the valve clearance. (See procedure in step (a))

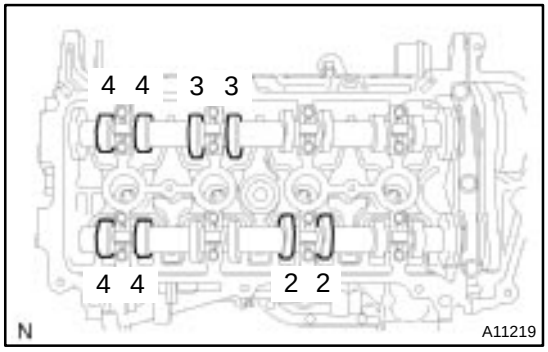

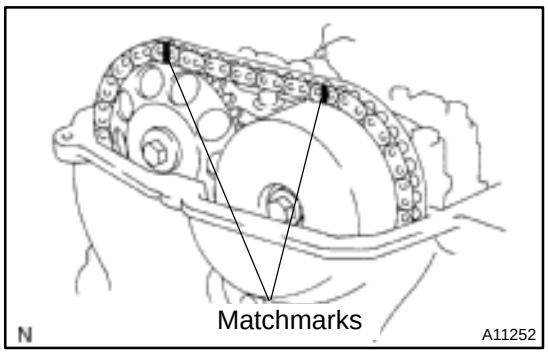

4. ADJUST VALVE CLEARANCE

(a) Set the No.1 cylinder to the TDC/compression (See procedure in step 2).

(b) Place matchmarks on the timing chain and camshaft timing sprockets.

(c) Remove the 2 plug from the timing chain cover.

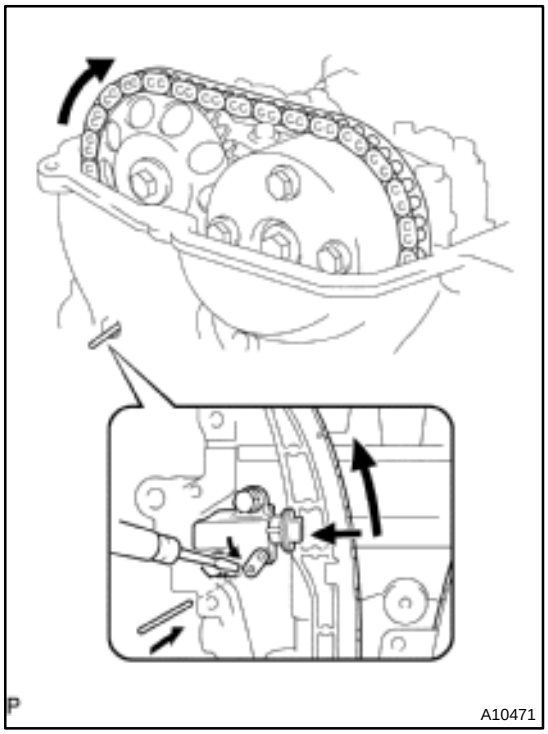

(d) Using drivers or equipment, while rotating the stopper plate of the tensioner downward, turn the exhaust camshaft right a little and push in the plunger of the chain tensioner as shown in the illustration.

HINT:

When the stopper plate cannot be lowered easily, rotate the exhaust camshaft right and left a little.

(e) Insert a bar of ø 2 – 3 mm (0.08 – 0.12 in.) into the holes in the stopper plate and tensioner to fix the stopper plate.

HINT:

- At this time, it is easier to fix by installing the bar while rotate the camshaft right and left a little.
- Fix the bar with tape so that the bar does not come off.

(f) Remove the timing chain from the camshaft timing sprocket.

NOTICE:

- **Never rotate the crankshaft with the timing chain removed.**
- **When rotating the camshaft with the timing chain removed, rotate the crankshaft counterclockwise 40˚ from the TDC and align the oil jet hole with the paint mark before rotating it.**
- **When installing the timing chain, make sure to return it to the position of the matchmarks for camshaft and then rotate the crankshaft clockwise to return.**

HINT:

When the chain cannot be removed easily, rotate the intake camshaft right and left a little.

(g) Hold the hexagonal portion of the camshaft with a wrench, and remove the bolt and valve timing controller assembly with the chain.

NOTICE:

Do not disassembled the valve timing controller assembly.

(h) Remove the intake and exhaust camshaft assembly.

HINT:

When disconnect the timing chain from the camshaft timing sprocket, holding the timing chain.

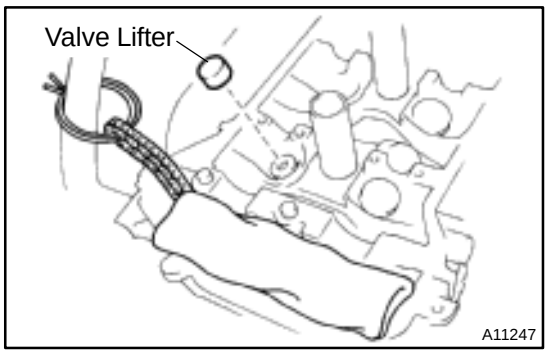

(i) Tie the timing chain with a string as shown in the illustration.

NOTICE:

- **Be careful not to drop anything inside the timing chain cover.**
- **Do not allow the chain to come into contact with water or dust.**

(j) Remove the valve lifters.

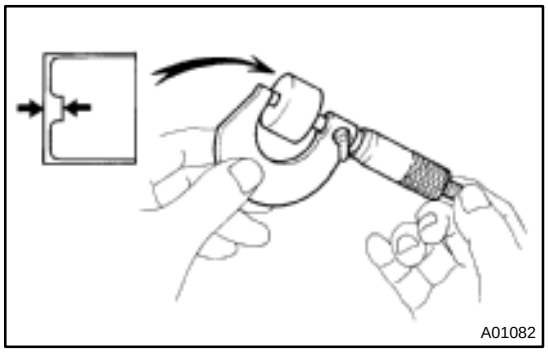

(k) Determine the replacement valve lifter size according to these Formula or Charts:

- Using a micrometer, measure the thickness of the removed lifter.
- Calculate the thickness of a new lifter so the valve clearance comes within the specified value.

T..... Thickness of used lifter
A..... Measured valve clearance
N..... Thickness of new lifter
Intake: N = T + (A – 0.20 mm (0.008 in.))
Exhaust: N = T + (A – 0.30 mm (0.012 in.))

- Select a new lifter with a thickness as close as possible to the calculated values.

HINT:
Lifter are available in 35 sizes in increments of 0.020 mm (0.0008 in.), from 5.060 mm (0.1992 in.) to 5.740 mm (0.2260 in.).

Valve Lifter Selection Chart (Intake)

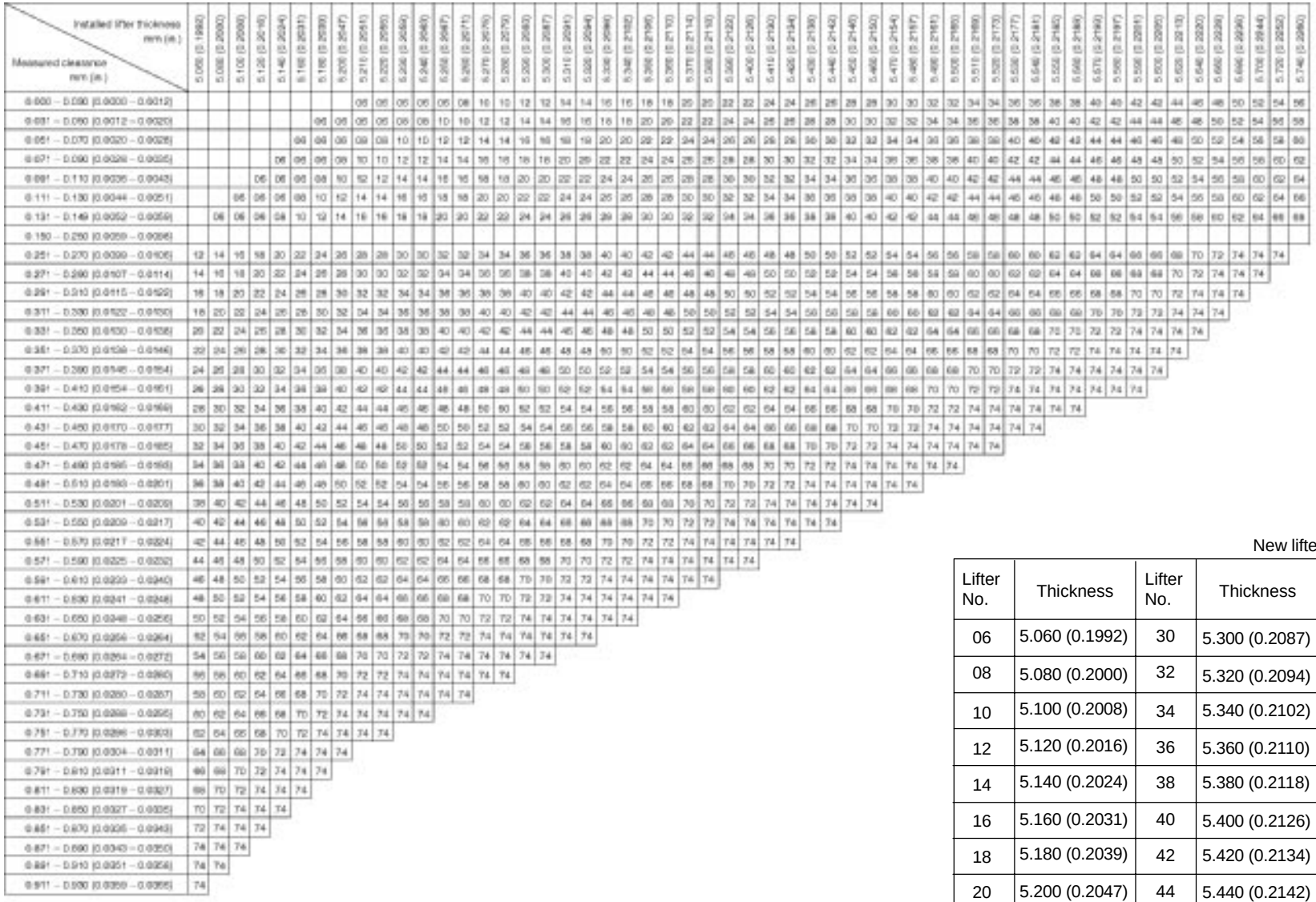

New lifter thickness mm (in.)

Lifter No.	Thickness	Lifter No.	Thickness	Lifter No.	Thickness
06	5.060 (0.1992)	30	5.300 (0.2087)	54	5.540 (0.2181)
08	5.080 (0.2000)	32	5.320 (0.2094)	56	5.560 (0.2189)
10	5.100 (0.2008)	34	5.340 (0.2102)	58	5.580 (0.2197)
12	5.120 (0.2016)	36	5.360 (0.2110)	60	5.600 (0.2205)
14	5.140 (0.2024)	38	5.380 (0.2118)	62	5.620 (0.2213)
16	5.160 (0.2031)	40	5.400 (0.2126)	64	5.640 (0.2220)
18	5.180 (0.2039)	42	5.420 (0.2134)	66	5.660 (0.2228)
20	5.200 (0.2047)	44	5.440 (0.2142)	68	5.680 (0.2236)
22	5.220 (0.2055)	46	5.460 (0.2150)	70	5.700 (0.2244)
24	5.240 (0.2063)	48	5.480 (0.2157)	72	5.720 (0.2252)
26	5.260 (0.2071)	50	5.500 (0.2165)	74	5.740 (0.2260)
28	5.280 (0.2079)	52	5.520 (0.2173)		

Intake valve clearance (Cold):
0.15 – 0.25 mm (0.006 – 0.010 in.)

EXAMPLE: The 5.250 mm (0.2067 in.) lifter is installed, and the measured clearance is 0.400 mm (0.0157 in.).
Replace the 5.250 mm (0.2067 in.) lifter with a new No. 46 lifter.

A01234

Valve Lifter Selection Chart (Exhaust)

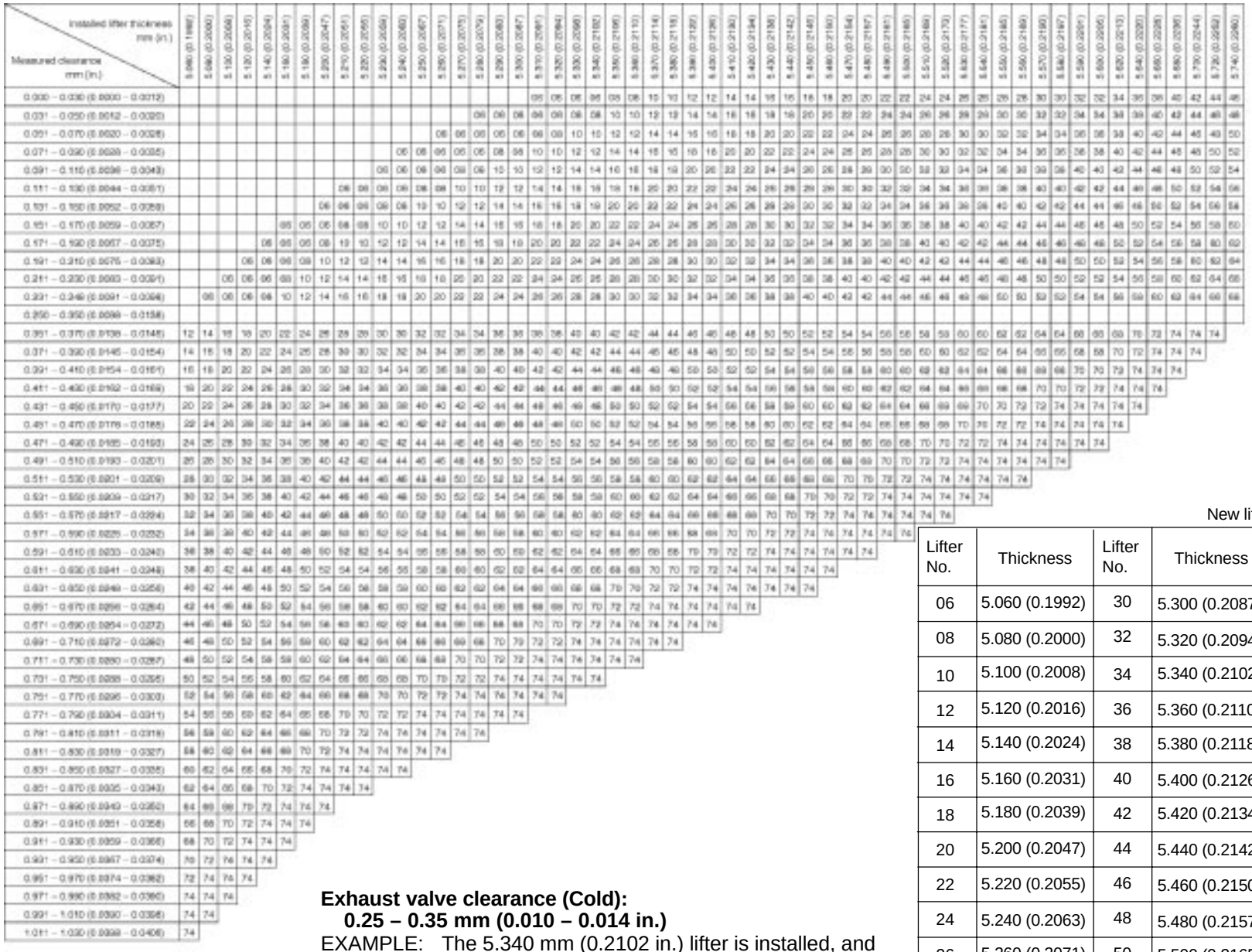

Exhaust valve clearance (Cold):
0.25 – 0.35 mm (0.010 – 0.014 in.)

EXAMPLE: The 5.340 mm (0.2102 in.) lifter is installed, and the measured clearance is 0.440 mm (0.0173 in.).
Replace the 5.340 mm (0.2102 in.) lifter with a new No. 48 lifter.

New lifter thickness mm (in.)

Lifter No.	Thickness	Lifter No.	Thickness	Lifter No.	Thickness
06	5.060 (0.1992)	30	5.300 (0.2087)	54	5.540 (0.2181)
08	5.080 (0.2000)	32	5.320 (0.2094)	56	5.560 (0.2189)
10	5.100 (0.2008)	34	5.340 (0.2102)	58	5.580 (0.2197)
12	5.120 (0.2016)	36	5.360 (0.2110)	60	5.600 (0.2205)
14	5.140 (0.2024)	38	5.380 (0.2118)	62	5.620 (0.2213)
16	5.160 (0.2031)	40	5.400 (0.2126)	64	5.640 (0.2220)
18	5.180 (0.2039)	42	5.420 (0.2134)	66	5.660 (0.2228)
20	5.200 (0.2047)	44	5.440 (0.2142)	68	5.680 (0.2236)
22	5.220 (0.2055)	46	5.460 (0.2150)	70	5.700 (0.2244)
24	5.240 (0.2063)	48	5.480 (0.2157)	72	5.720 (0.2252)
26	5.260 (0.2071)	50	5.500 (0.2165)	74	5.740 (0.2260)
28	5.280 (0.2079)	52	5.520 (0.2173)		

A01235

(l) Reinstall the valve lifters (See page EM–43).
(m) Align the crankshaft pulley groove with the timing mark ”0” of the timing chain cover.
(n) Hold the timing chain, and place the exhaust camshaft and timing sprocket assembly.
(o) Align the matchmarks on the timing chain and camshaft timing sprocket.

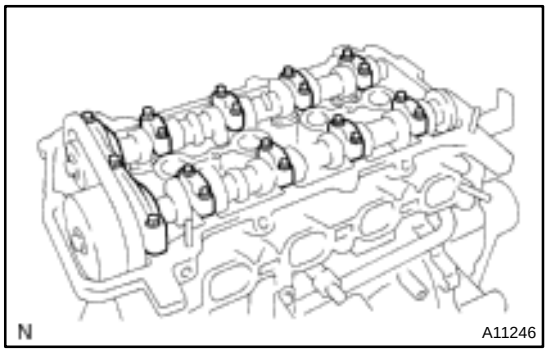

(p) Reinstall the intake camshaft, valve timing controller assembly and camshaft bearing caps (See page EM–45).
(q) Remove the bar from the timing chain tensioner.

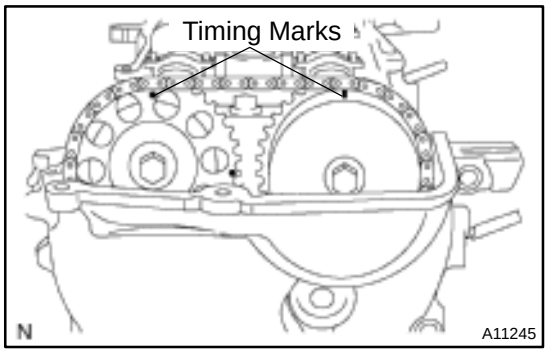

(r) Check that both timing marks on the camshaft timing sprocket and valve timing controller assembly are facing right upas shown in the illustration.

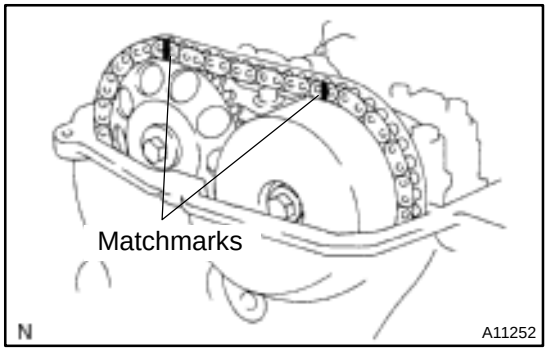

(s) Check that the matchmarks on the timing chain and camshaft timing sprockets.
(t) Install a new plug to the timing chain cover.
Torque: 15 N·m (150 kgf·cm, 11 ft·lbf)
(u) Recheck the valve clearance (See procedure in step 3).
(v) Check the valve timing (See page EM–19).

5. REINSTALL CYLINDER HEAD COVER
(See page EM–21)

TIMING CHAIN

COMPONENTS

EM173–04

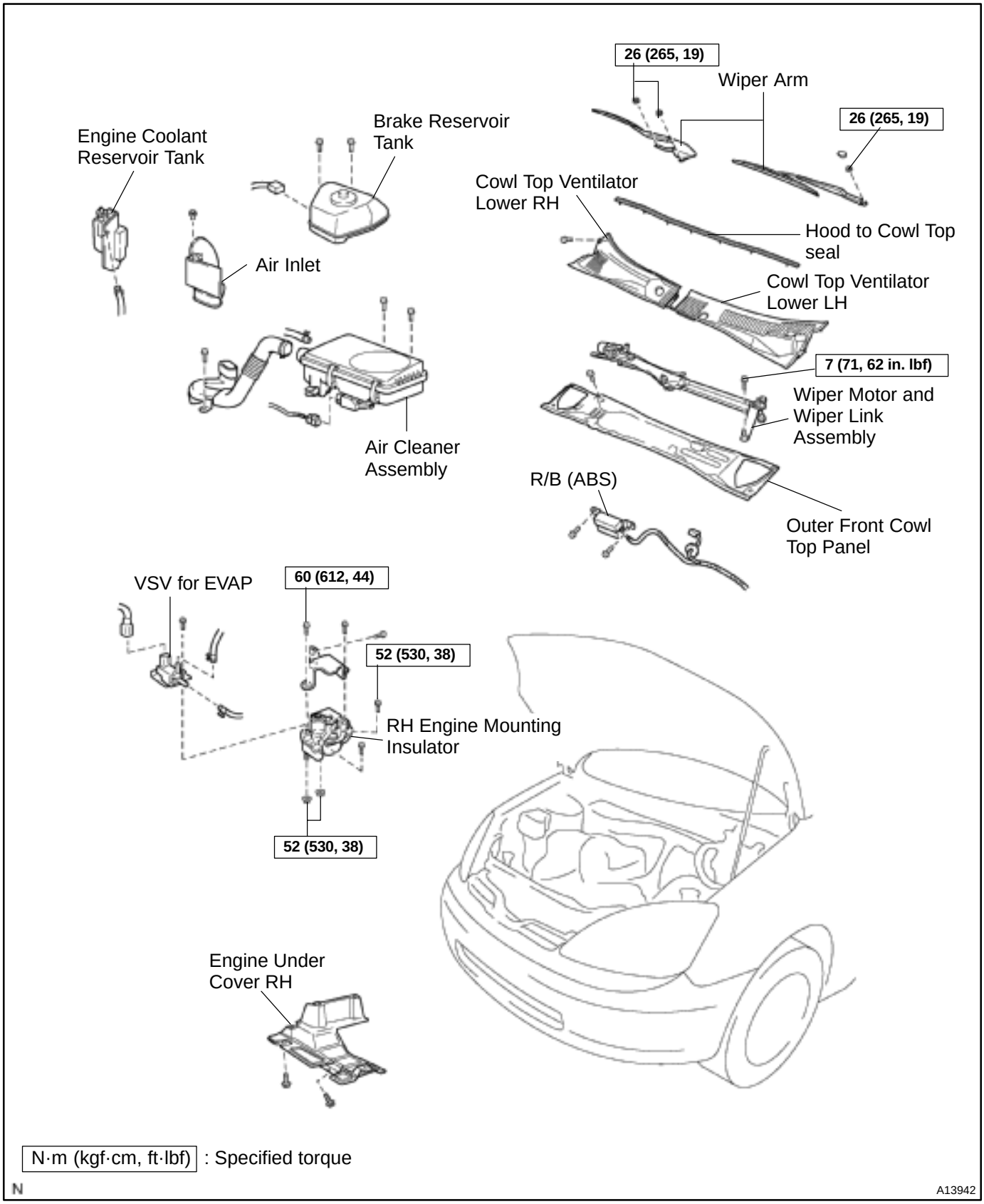

N·m (kgf·cm, ft·lbf) : Specified torque

N

A13942

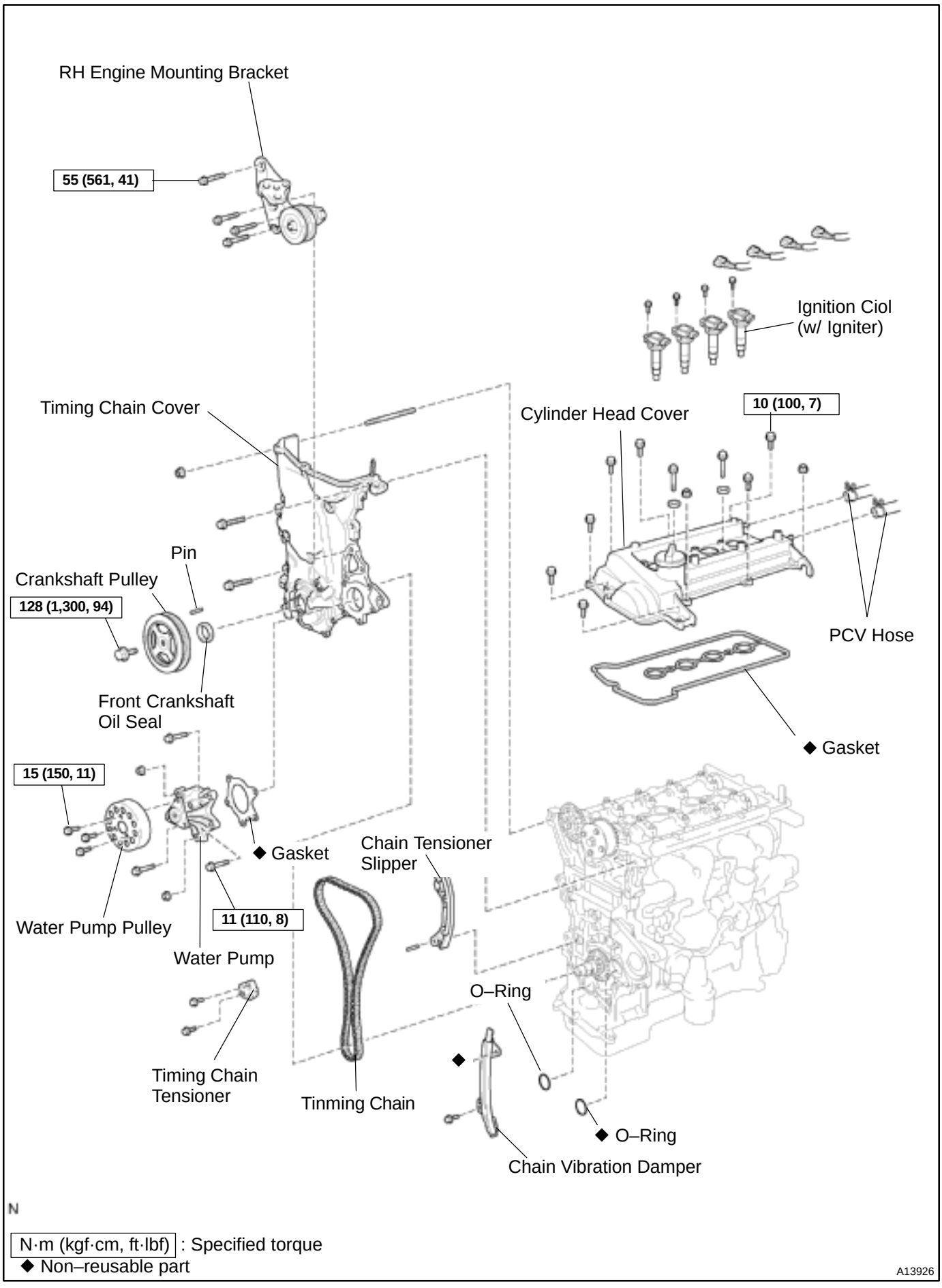
RH Engine Mounting Bracket
55 (561, 41)
Ignition Ciol
(w/ Igniter)
Timing Chain Cover
Cylinder Head Cover
10 (100, 7)
Pin
Crankshaft Pulley
128 (1,300, 94)
PCV Hose
Front Crankshaft
Oil Seal
◆ Gasket
15 (150, 11)
◆ Gasket
Chain Tensioner
Slipper
Water Pump Pulley
11 (110, 8)
Water Pump
O–Ring
Timing Chain
Tensioner
Tinming Chain
◆
◆ O–Ring
Chain Vibration Damper
N
N·m (kgf·cm, ft·lbf) : Specified torque
◆ Non–reusable part
A13926

EM1IU–03

REMOVAL

1. DISCONNECT BATTERY NEGATIVE (–) TERMINAL AND HV BATTERY SERVICE PLUG
(See page HV–1)

2. REMOVE OUTER FR COWL TOP PANEL ASSEMBLY
(See page BO–32)

3. REMOVE RH ENGINE UNDER COVER

4. DRAIN ENGINE COOLANT

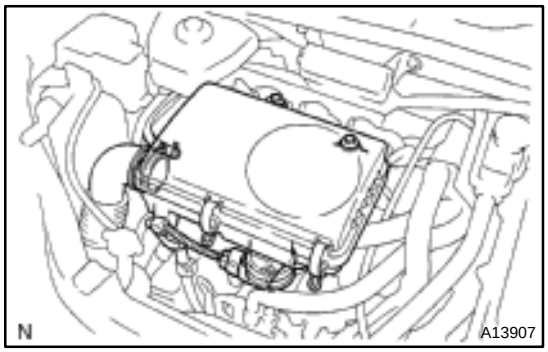

5. REMOVE AIR CLEANER ASSEMBLY

(a) Disconnect the MAF meter connector.
(b) Disconnect the EVAP hose from the air cleaner case.
(c) Loosen the 2 hose clamps.
(d) Remove the 3 bolts and air cleaner assembly.

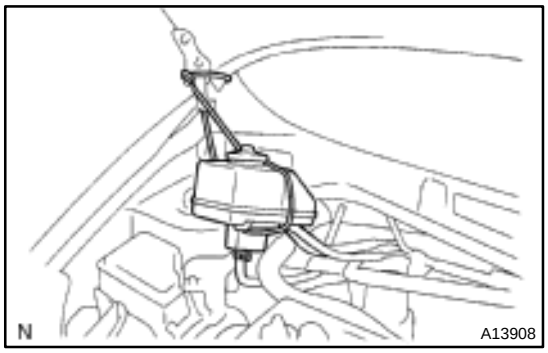

6. REMOVE BRAKE RESERVOIR TANK

(a) Disconnect the brake fluid level sensor connector.
(b) Remove the 2 bolts and remove the reservoir tank and suspend it.
(c) Remove the 3 bolts and reservoir tank bracket.

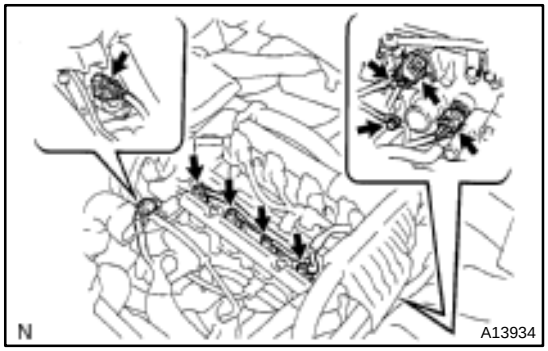

7. DISCONNECT CONNECTORS

(a) Disconnect the 4 ignition connectors.
(b) Disconnect the 4 injector connectors.
(c) Disconnect the 2 VSV connectors.
(d) Disconnect the camshaft position sensor connector.
(e) Disconnect the water temperature connector.
(f) Disconnect the Camshaft timing oil control valve connector.

8. REMOVE AIR INLET

9. REMOVE ENGINE COOLANT RESERVOIR TANK

10. REMOVE VSV FROM ENGINE MOUNTING INSULATOR

11. REMOVE DRIVE BELT

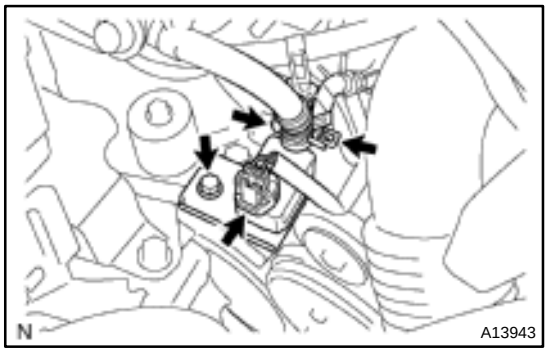

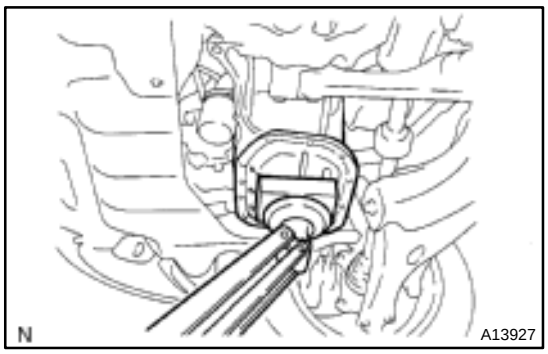

12. REMOVE RH ENGINE MOUNTING INSULATOR

(a) Set the jack to the engine.

HINT:

Place the wooden block between the jack and engine.

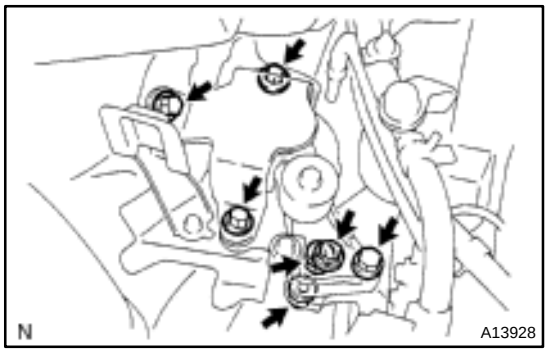

(b) Remove the 5 bolts, 2 nuts and RH engine mounting insulator.

13. DISCONNECT ENGINE WIRE FROM CYLINDER HEAD COVER

Remove the 3 bolts and disconnect the engine wire from the cylinder head.

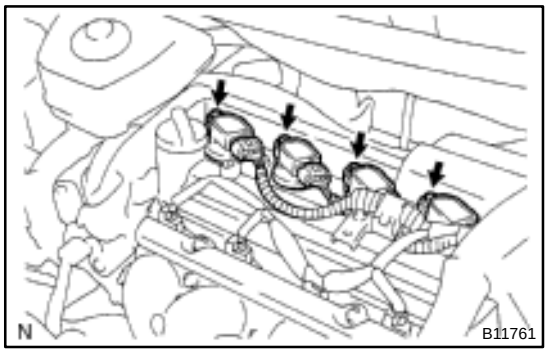

14. REMOVE CYLINDER HEAD COVER

(a) Remove the ignition coils (See page IG–6)

(b) Remove the 2 PCV hoses from the cylinder head cover.

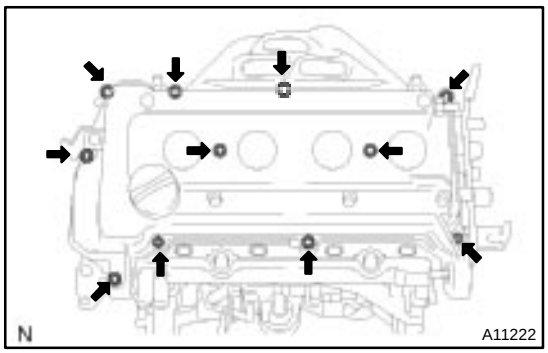

(c) Remove the 7 bolts, 2 seal washers, 2 nuts, cylinder head cover and gasket.

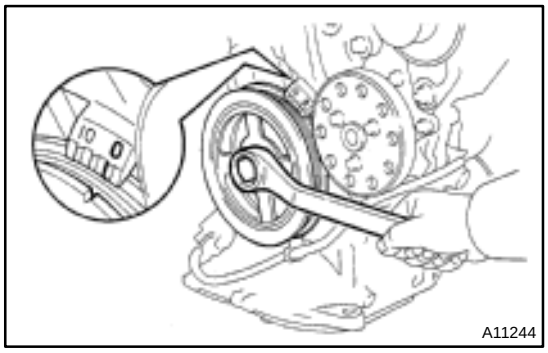

15. SET NO.1 CYLINDER TO TDC/COMPRESSION

(a) Turn the crankshaft pulley, and align its groove with timing mark ”0” of the timing chain cover.

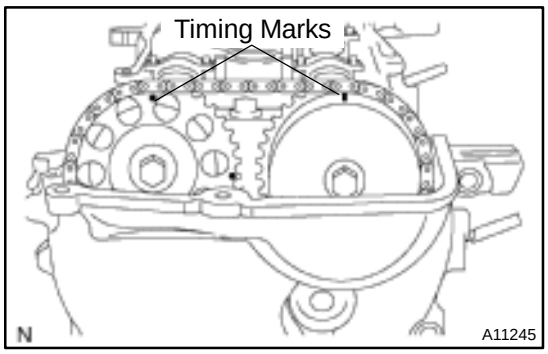

(b) Check that both timing marks on the camshaft timing sprocket and valve timing controller assembly are facing right up as shown in the illustration.

If not, turn the crankshaft 1 revolution (360˚) and align the marks as above.

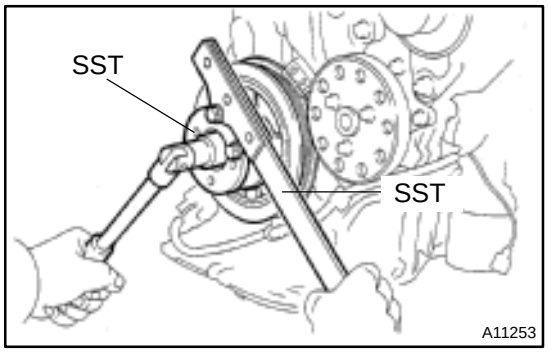

16. REMOVE CRANKSHAFT PULLEY

(a) Using SST, remove the pulley bolt.
SST 09213–70010, 09330–00021

(b) Remove the crankshaft pulley and pin.

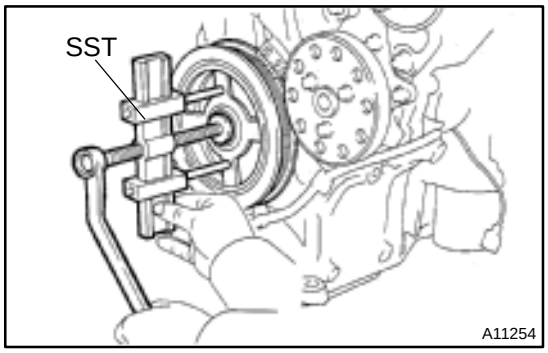

HINT:
If necessary, remove the pulley with SST.
SST 09950–50012 (09951–05010, 09952–05010, 09953–05020, 09954–05020)

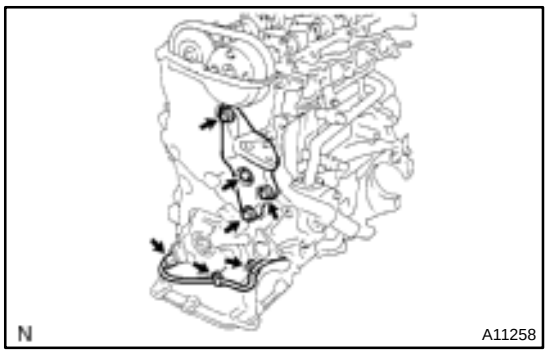

17. REMOVE CRANKSHAFT POSITION SENSOR (See page IG–12)

18. REMOVE RH ENGINE MOUNTING BRACKET

Remove the 4 bolts and mounting bracket.

19. REMOVE WATER PUMP (See page CO–6)

20. REMOVE OIL CONTROL VALVE (See page EM–29)

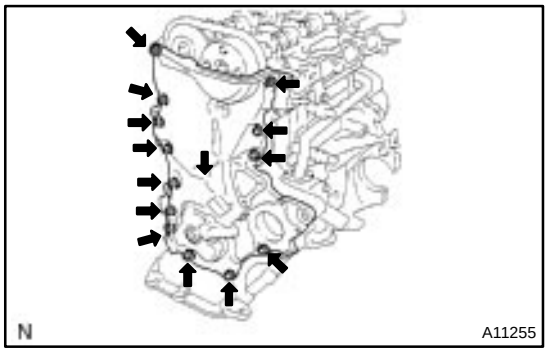

21. REMOVE TIMING CHAIN COVER

(a) Remove the 13 bolts and nut.

(b) Using a torx wrench socket (E8), remove the stud bolt.

(c) Remove the timing chain cover by prying the portions between the cylinder head and cylinder block with a screwdriver.

NOTICE:
Be careful not to damage the contact surfaces of the timing chain cover, cylinder head and cylinder block.

(d) Remove the 2 O–rings from the cylinder block and oil pan No.1.

22. REMOVE CHAIN TENSIONER

Remove the 2 bolts and chain tensioner.

23. REMOVE CHAIN TENSIONER SLIPPER

24. REMOVE CHAIN VIBRATION DAMPER

Remove the 2 bolts and damper.

25. REMOVE TIMING CHAIN

EM1IV–02

INSTALLATION

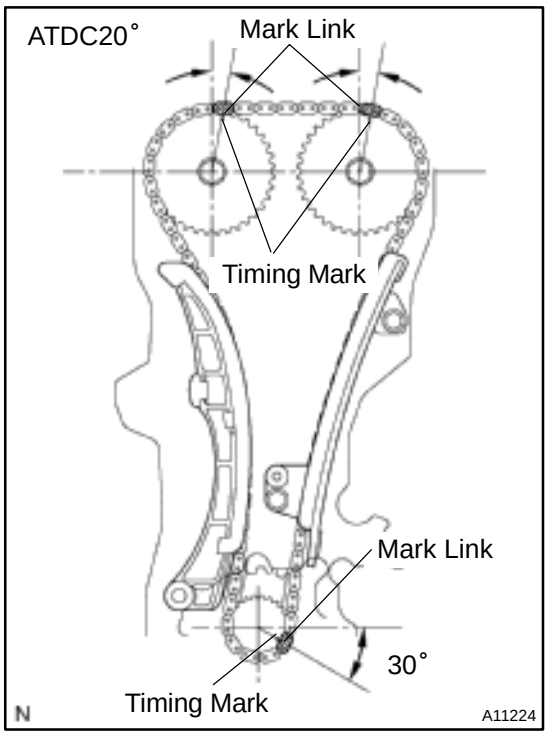

1. INSTALL TIMING CHAIN

(a) After setting the crankshaft at ATDC40–140 ˚, set cams of intake and exhaust timing sprockets at ATDC 20 ˚ and then the reset the crankshaft at ATDC 20 ˚.

(b) Install the chain vibration damper with the 2 bolts.
Torque: 9.0 N·m (92 kgf·cm, 80 in.·lbf)

(c) Align the match marks of timing chain mark plate (Yellow), camshaft timing sprocket, camshaft timing gear and crankshaft timing sprocket to install the timing chain as shown in the illustration.

HINT:

To prevent the exhaust camshaft from spring back turn it using a wrench and set it at the mark on a chain.

(d) Install the chain tensioner slipper.

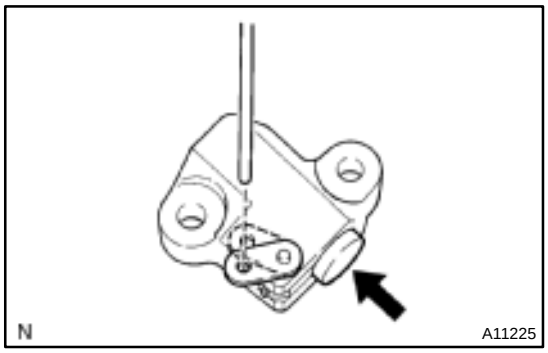

2. INSTALL CHAIN TENSIONER

(a) While rotating the lock plate of the tensioner up–ward, push in the plunger of the tensioner as shown in the illustration.

(b) While rotating the lock plate of the tensioner down–ward, insert a bar of 2.5 mm (0.098 in.) into the holes in the lock plate.

(c) Install the chain tensioner with the 2 bolts.
Torque: 9.0 N·m (92 kgf·cm, 80 in.·lbf)

(d) Remove the bar from the chain tensioner.

(e) Check that the tension between the intake and exhaust camshaft timing sprocket.

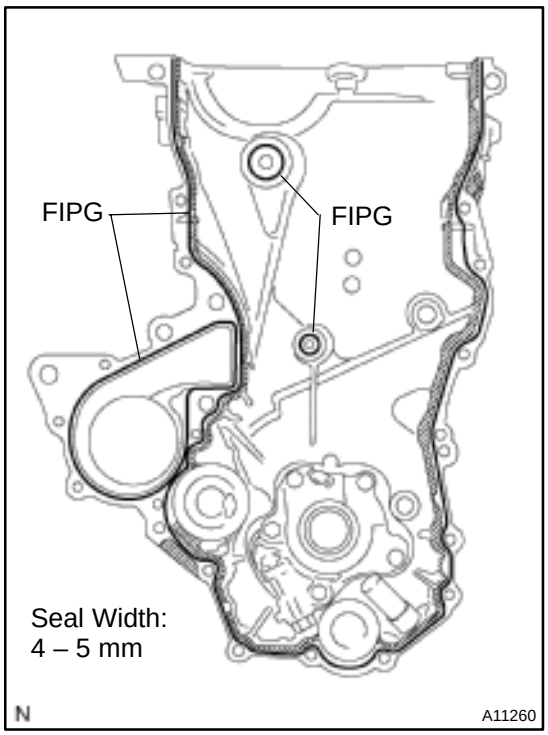

3. INSTALL TIMING CHAIN COVER AND WATER PUMP

(a) Remove any old packing (FIPG) material and be careful not to drop any oil on the contact surfaces of the timing chain cover, cylinder head and cylinder block.
- Using a razor blade and a gasket scraper, remove all the old packing (FIPG) material from the gasket surfaces and sealing grooves.
- Thoroughly clean all components to remove all the loose material.
- Using a non–residue solvent, clean both sealing surfaces.

(b) Apply seal packing to the timing chain cover as shown in the illustration.

Seal packing:
Part No. 08826 – 00100 or equivalent
- Install a nozzle that has been cut to a 4 – 5 mm (0.16 – 0.20 in.) opening.
- FIPG shall be accumulated in the groove for FIPG to a depth of 2.5 mm (0.10 in.) or more.

HINT:
Avoid applying an excessive amount to the surface.
- Parts must be assembled within 3 minutes of application. Otherwise the material must be removed and reapplied.
- Immediately remove nozzle from the tube and reinstall cap.

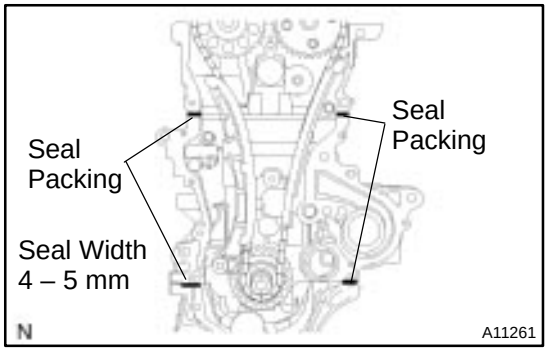

(c) Apply seal packing to 4 locations as shown in the illustration.

Seal packing:
Part No. 08826 – 00080 or equivalent
- Install a nozzle that has been cut to a 4 – 5 mm (0.16 – 0.20 in.) opening.

HINT:
Avoid applying an excessive amount to the surface.
- Parts must be assembled within 3 minutes of application. Otherwise the material must be removed and reapplied.
- Immediately remove nozzle from the tube and reinstall cap.

(d) Install 2 new O–rings to the cylinder block and oil pan No. 1.

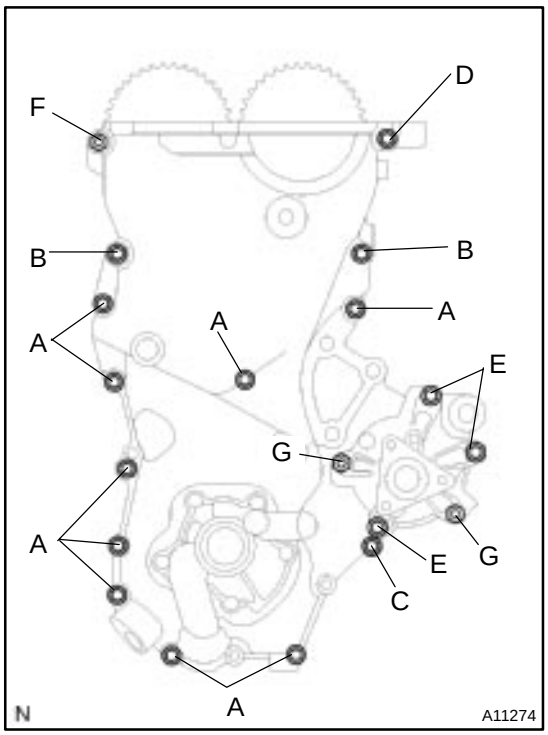

(e) Install the timing chain cover, new O–ring and water pump with the 16 bolts and 3 nuts. Uniformly tighten the bolts and nut in several passes.

Torque:
Bolt A 11 N·m (113 kgf·cm, 8 ft·lbf)
Bolt B 24 N·m (245 kgf·cm, 18 ft·lbf)
Bolt C 11 N·m (113 kgf·cm, 8 ft·lbf)
Bolt D 24 N·m (245 kgf·cm, 18 ft·lbf)
Bolt E 11 N·m (113 kgf·cm, 8 ft·lbf)
Nut F 24 N·m (245 kgf·cm, 18 ft·lbf)
Nut G 11 N·m (113 kgf·cm, 8 ft·lbf)

NOTICE:

- **Pay attention not to wrap the chain and slipper over the chain cover seal line.**
- **After installing the chain cover, must install the mounting bracket and water pump within 15 minutes.**

HINT:
Each bolt length in indicated in the illustration.
A 20 mm (0.787 in.)
B 30 mm (1.181 in.)
C 35 mm (1.378 in.)
D 20 mm (0.787 in.)
E 35 mm (1.378 in.)

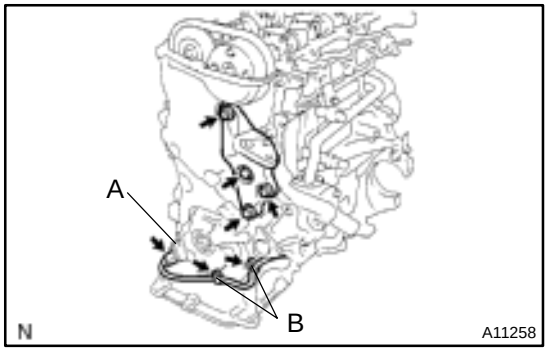

4. INSTALL RH ENGINE MOUNTING BRACKET

(a) Apply seal packing to threads of the mounting bolt.

Seal packing:
Part No. 08826 – 00080 or equivalent

HINT:
Do not apply seal packing to 2 or 3 threads of the bolt end.

(b) Install the mounting bracket with the 4 bolts.

Torque: 55 N·m (561 kgf·cm, 41 ft·lbf)

5. INSTALL CRANKSHAFT POSITION SENSOR

Torque:
Bolt A 7.5 N·m (76 kgf·cm, 66 in.·lbf)
Bolt B 11 N·m (113 kgf·cm, 8 ft·lbf)

6. INSTALL OIL CONTROL VALVE (See page EM–45)

Torque: 7.5 N·m (76 kgf·cm, 66 in.·lbf)

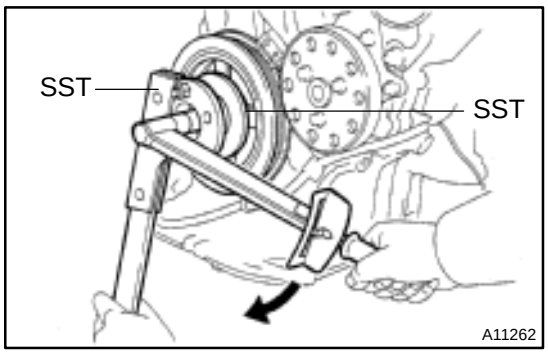

7. INSTALL CRANKSHAFT PULLEY

(a) Clean the crankshaft pulley inside.

(b) Install the pin to the crankshaft.

(c) Align the hole in the crank pulley with the pin position and install the crank pulley.

(d) Using SST, install the pulley bolt.

SST 09213–70010, 09330–00021

Torque: 128 N·m (1,300 kgf·cm, 94 ft·lbf)

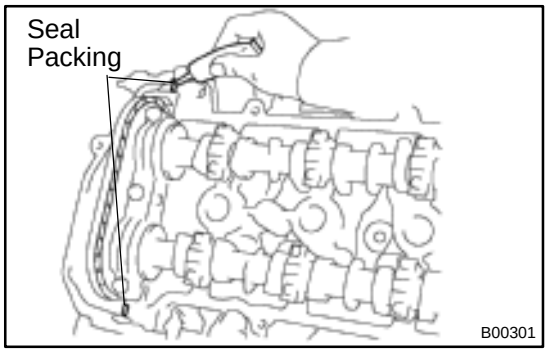

8. INSTALL CYLINDER HEAD COVER

(a) Remove any old packing (FIPG) material.

(b) Apply seal packing to 2 locations as shown in the illustration.

Seal packing:

Part No. 08826 – 00080 or equivalent

(c) Install the gasket to the cylinder head cover.

HINT:

Part must be assembled within 3 minutes of application. Otherwise the material must be remove and reapplied.

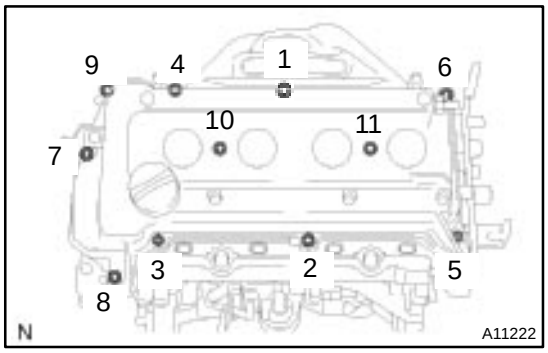

(d) Install the cylinder head cover and cable bracket with the 7 bolts, 2 seal washers and 2 nuts.

Uniformly tighten the bolts and nuts, in the several passes, in the sequence shown.

Torque: 10 N·m (100 kgf·cm, 7 ft·lbf)

(e) Connect the 2 PCV hoses to the cylinder head cover.

9. CONNECT ENGINE WIRE TO CYLINDER HEAD COVER

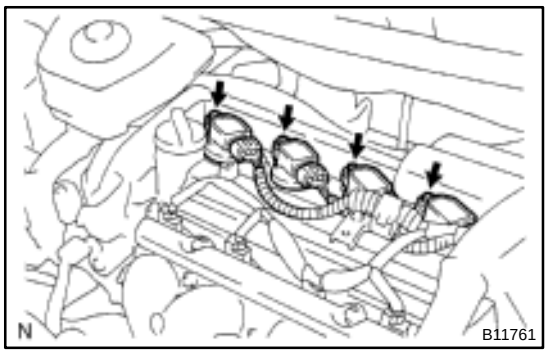

10. INSTALL IGNITION COILS (See page IG–7)

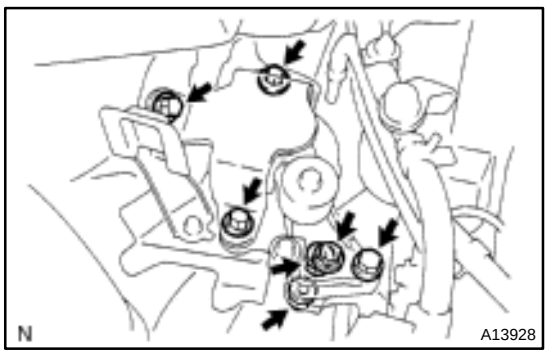

11. REMOVE RH ENGINE MOUNTING INSULATOR

Install the RH engine mounting insulator with the 5 bolts and 2 nuts.

12. INSTALL VSV TO RH ENGINE MOUNTING INSULATOR

13. INSTALL DRIVE BELT

14. INSTALL ENGINE COOLANT RESERVOIR TANK

15. INSTALL AIR INLET

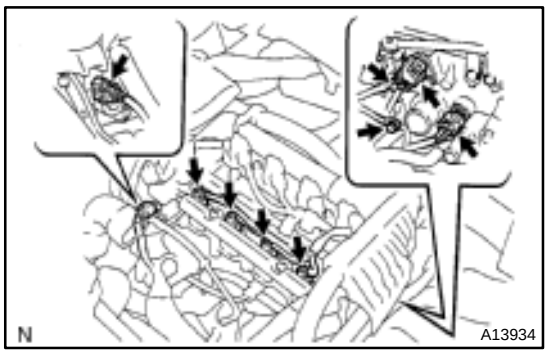

16. CONNECT CONNECTORS

(a) Connect the Camshaft timing oil control valve connector.
(b) Connect the water temperature sensor connector.
(c) Connect the camshaft position sensor connector.
(d) Connect the 2 VSV connectors.
(e) Connect the 4 injector connectors.
(f) Connect the 4 ignition connectors.

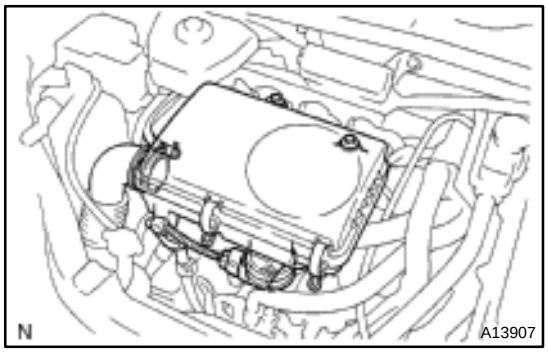

17. INSTALL AIR CLEANER ASSEMBLY

(a) Install the air cleaner assembly with the 2 bolts.
(b) Tighten the 2 hose clamps.
(c) Connect the EVAP hose to the air cleaner case.
(d) Connect the MAF meter connector.

18. INSTALL BRAKE RESERVOIR TANK

19. INSTALL OUTER FR COWL TOP PANEL ASSEMBLY (See page BO–35)

20. FILL WITH ENGINE COOLANT

21. INSTALL ENGINE UNDER COVERS

22. CONNECT BATTERY NEGATIVE (–) TERMINAL AND HV BATTERY SERVICE PLUG (See page HV–1)

23. ROAD TEST VEHICLE

Check for abnormal noises, shock slippage, correst shift points and smooth operation.

24. RECHECK ENGINE COOLANT AND HV TRANSAXLE COOLANT

CYLINDER HEAD

COMPONENTS

EM1IW–02

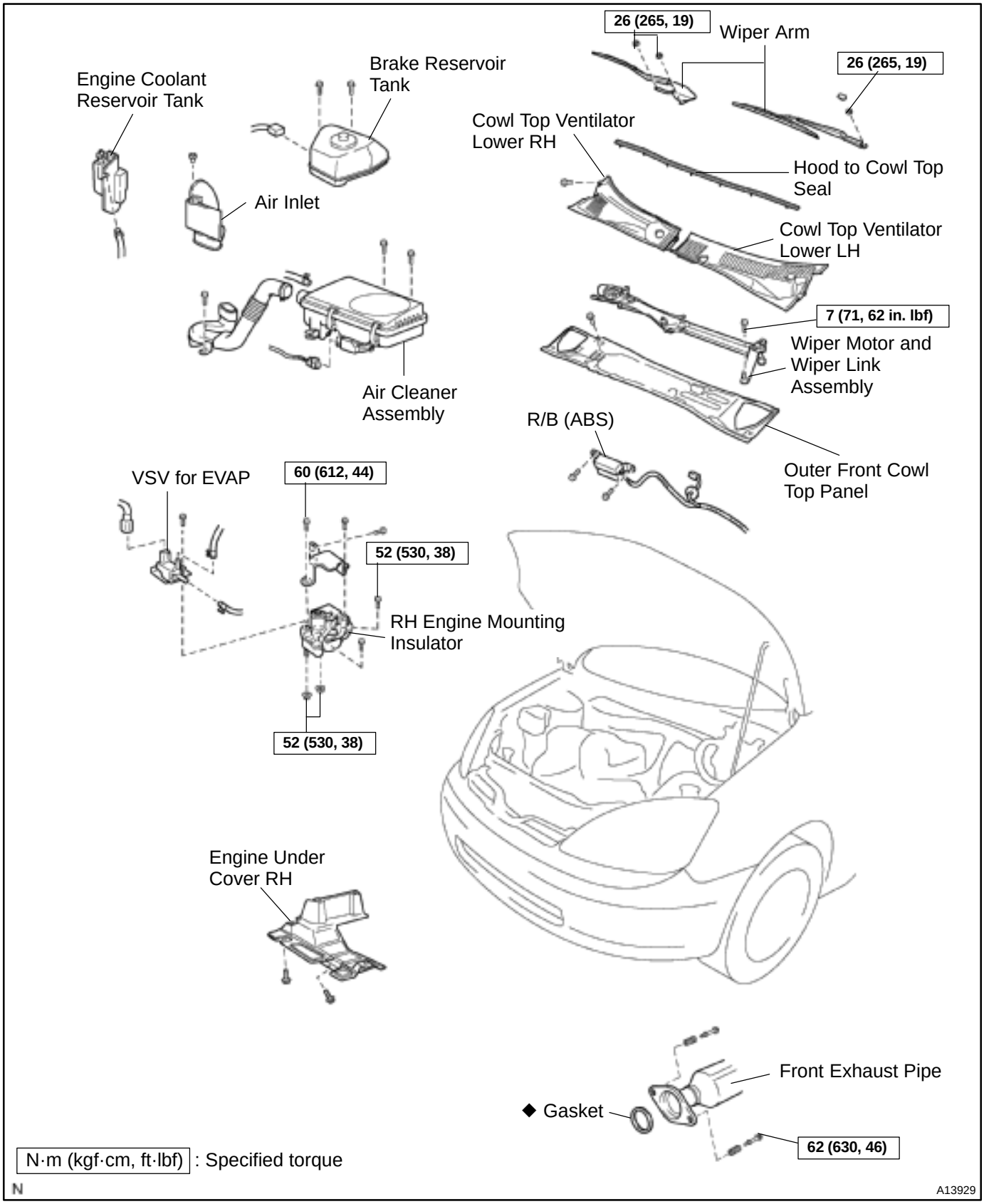

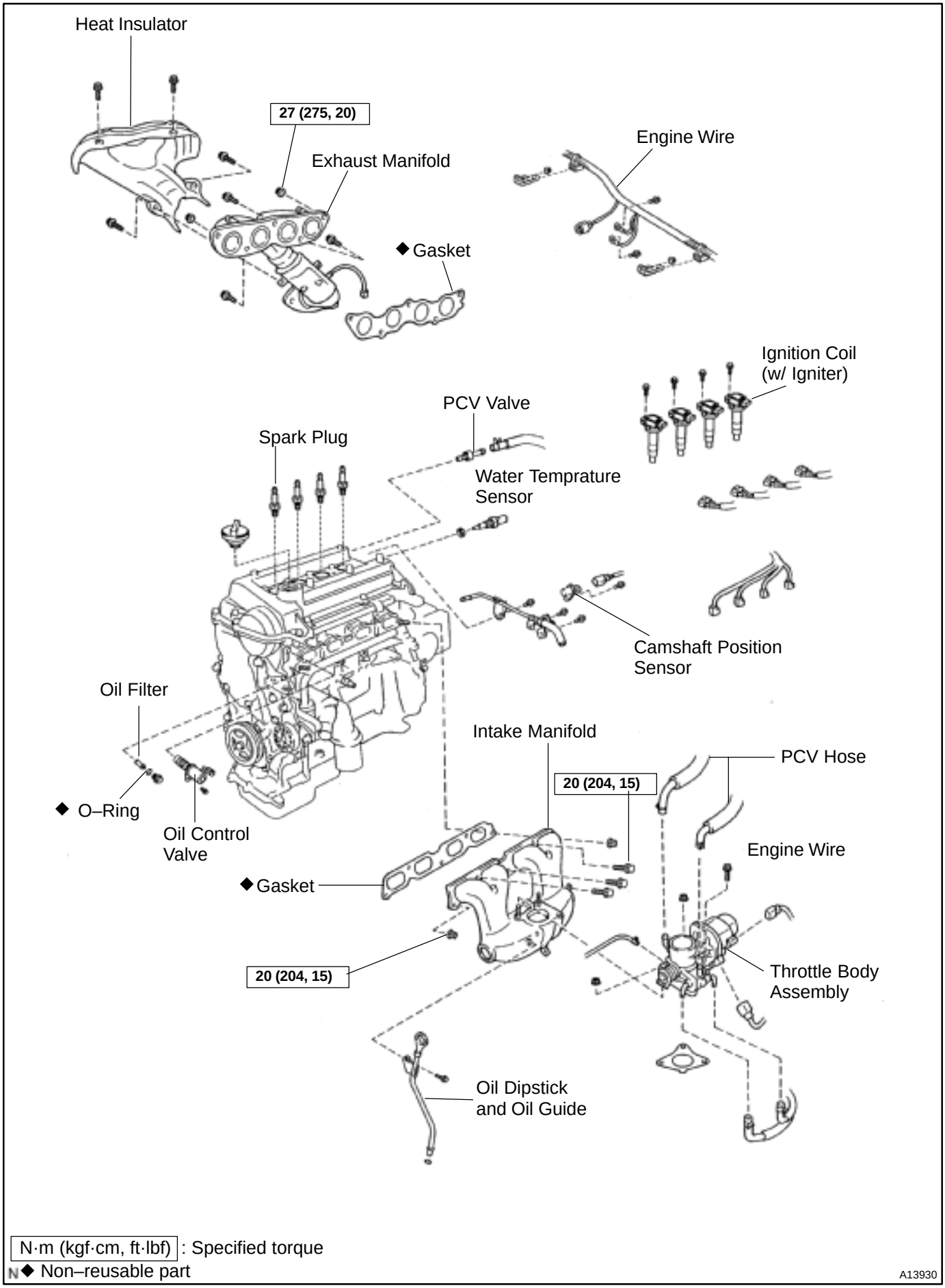
Heat Insulator
27 (275, 20)
Exhaust Manifold
Engine Wire
◆Gasket
Ignition Coil
(w/ Igniter)
PCV Valve
Spark Plug
Water Temprature
Sensor
Camshaft Position
Sensor
Oil Filter
Intake Manifold
PCV Hose
20 (204, 15)
◆ O–Ring
Oil Control
Valve
Engine Wire
◆Gasket
20 (204, 15)
Throttle Body
Assembly
Oil Dipstick
and Oil Guide
N·m (kgf·cm, ft·lbf) : Specified torque
N◆ Non–reusable part
A13930

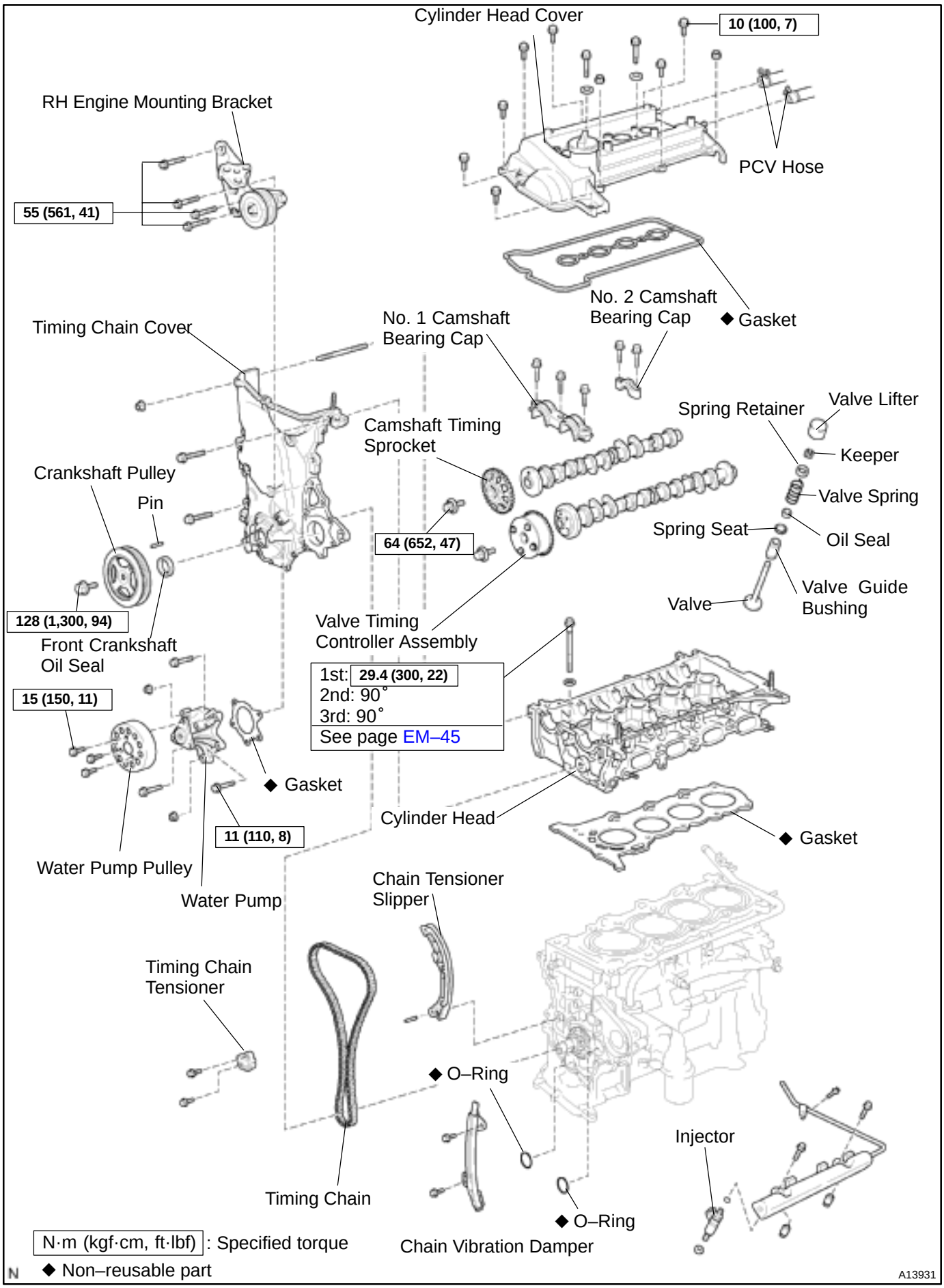
Cylinder Head Cover
10 (100, 7)
RH Engine Mounting Bracket
PCV Hose
55 (561, 41)
No. 2 Camshaft Bearing Cap
◆ Gasket
Timing Chain Cover
No. 1 Camshaft Bearing Cap
Spring Retainer
Valve Lifter
Camshaft Timing Sprocket
Keeper
Crankshaft Pulley
Pin
Valve Spring
Spring Seat
Oil Seal
64 (652, 47)
Valve
Valve Guide Bushing
128 (1,300, 94)
Valve Timing Controller Assembly
Front Crankshaft Oil Seal
1st: 29.4 (300, 22)
2nd: 90°
3rd: 90°
See page EM–45
15 (150, 11)
◆ Gasket
Cylinder Head
◆ Gasket
11 (110, 8)
Water Pump Pulley
Water Pump
Chain Tensioner Slipper
Timing Chain Tensioner
◆ O–Ring
Injector
Timing Chain
◆ O–Ring
N·m (kgf·cm, ft·lbf) : Specified torque
Chain Vibration Damper
◆ Non–reusable part
N
A13931

EM1IX–02

REMOVAL

1. DISCONNECT BATTERY NEGATIVE (–)TERMINAL AND HV BATTERY SERVICE PLUG (See page HV–1)

2. REMOVE OUTER FRONT COWL TOP PANEL ASSEMBLY (See page BO–32)

3. DRAIN HV TRANSAXLE COOLANT (See page HT–6)

4. DRAIN ENGINE COOLANT

5. REMOVE CONVERTER AND INVERTER ASSEMBLY (See page HV–18)

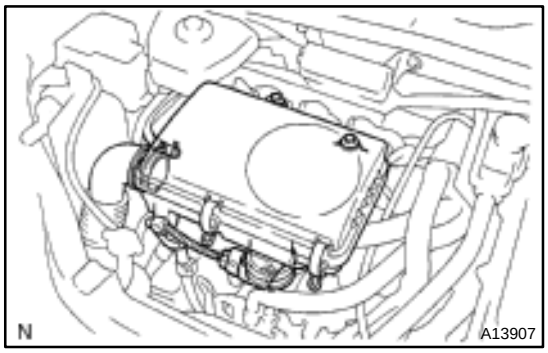

6. REMOVE AIR CLEANER ASSEMBLY

(a) Disconnect the MAF meter connector.

(b) Disconnect the EVAP hose from the air cleaner case.

(c) Loosen the 2 hose clamps.

(d) Remove the 3 bolts and air cleaner assembly.

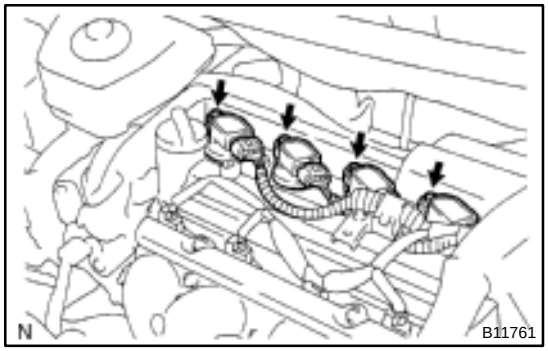

7. REMOVE IGNITION COILS (See page IG–6)

8. REMOVE SPARK PLUGS (See page IG–1)

9. REMOVE PCV HOSES

10. REMOVE THROTTLE BODY (See page SF–28)

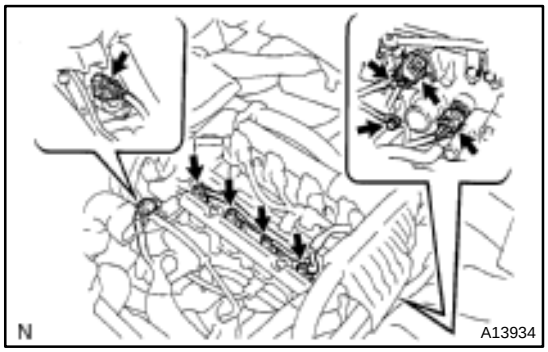

11. DISCONNECT ENGINE WIRE FROM CYLINDER HEAD

(a) Disconnect the ECT sensor connector.

(b) Disconnect the camshaft position sensor connector.

(c) Disconnect the oil control valve connector.

(d) Disconnect the 4 injector connectors.

(e) Remove the 3 bolts and disconnect the engine wire protector from the cylinder head cover.

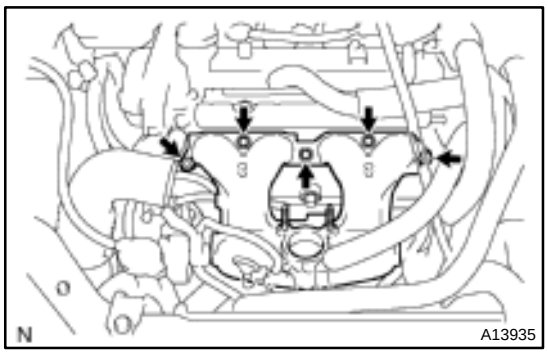

12. REMOVE INTAKE MANIFOLD

Remove the 3 bolts, 2 nuts intake manifold and gasket.

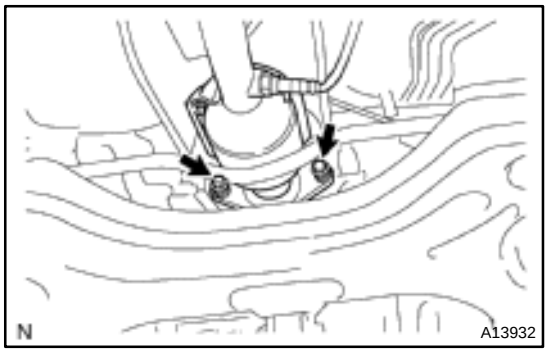

13. DISCONNECT FRONT EXHAUST PIPE FROM EXHAUST MANIFOLD

(a) Remove the 2 bolts and 2 springs holding the front exhaust pipe to the exhaust manifold.

(b) Remove the gasket.

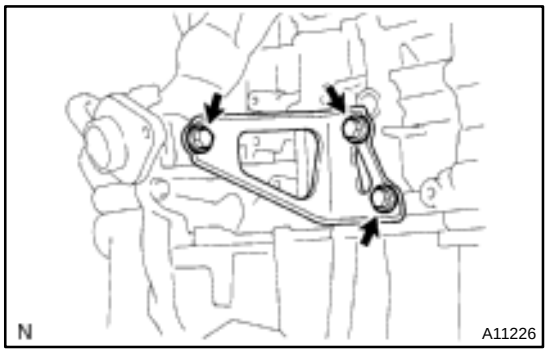

14. REMOVE EXHAUST MANIFOLD STAY

Remove the 3 bolts and exhaust manifold stay.

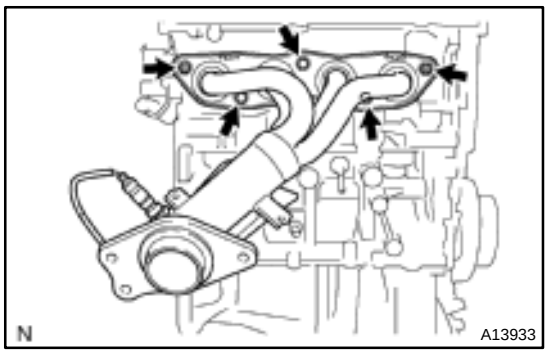

15. REMOVE EXHAUST MANIFOLD

(a) Remove the 4 bolts and upper heat insulator.

(b) Remove the 3 bolts 2 nuts, exhaust manifold and gasket.

16. REMOVE CAMSHAFT POSITION SENSOR

17. REMOVE ECT SENSOR

18. REMOVE OIL CONTROL VALVE

19. REMOVE PCV VALVE

20. REMOVE OIL FILLER CAP

21. REMOVE HEAD COVER (See page EM–15)

22. REMOVE INJECTOR (See page SF–11)

23. REMOVE TIMING CHAIN COVER (See page EM–15)

24. REMOVE CAMSHAFT TIMING SPROCKET AND VALVE TIMING CONTROL ASSEMBLY

Hold the hexagonal head portion of the camshaft with a wrench, and remove the 2 bolts and timing sprocket and valve timing controller assembly.

NOTICE:

- **Be careful not to damage the cylinder head and valve lifter with the wrench.**

- **Do not disassembly the valve timing controller assembly.**

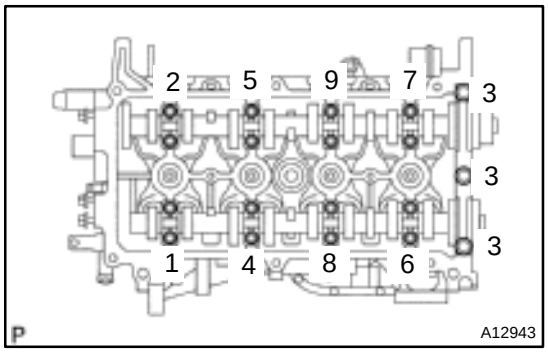

25. REMOVE CAMSHAFTS

Uniformly loosen and remove the 19 bearing cap bolts, in several passes, in the sequence shown, and remove the 9 bearing caps, intake and exhaust camshafts.

26. REMOVE CYLINDER HEAD

(a) Disconnect the upper radiator hose from the water hose union

(b) Disconnect the heater water hose from the water hose union

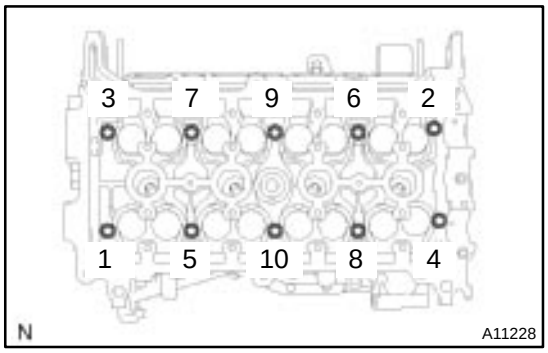

(c) Using a 8 mm bi–hexagon wrench, uniformly loosen and remove the 10 cylinder head bolts, in several passes, in the sequence shown. Remove the 10 cylinder head bolts and plate washers.

NOTICE:

Head warpage or cracking could result from removing bolts in an incorrect order.

(d) Remove the bolt holding the water bypass pipe to the cylinder head.

(e) Lift the cylinder head from the dowels on the cylinder block and replace the cylinder head on wooden blocks on a bench.

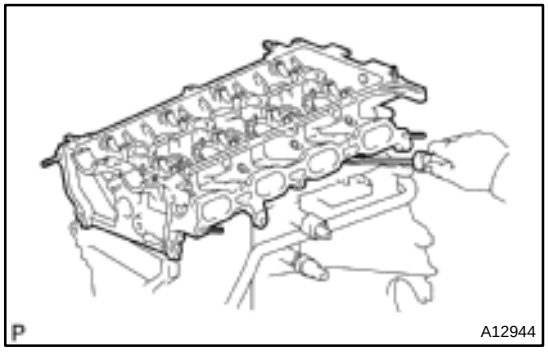

HINT:

If the cylinder head is difficult to lift off, pry between the cylinder head and cylinder block with a screwdriver.

NOTICE:

Be careful not to damage the contact surfaces of the cylinder head and cylinder block.

EM16K–03

INSPECTION

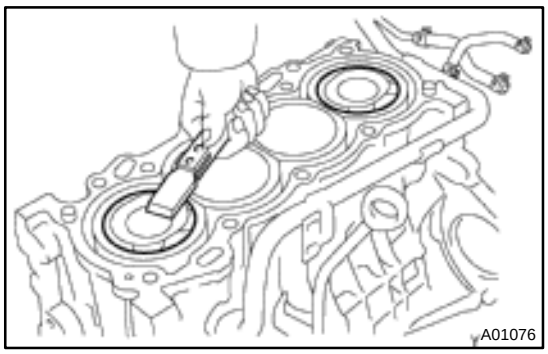

1. CLEAN TOP SURFACES OF PISTONS AND CYLINDER BLOCK

(a) Turn the crankshaft, and bring each piston to top dead center (TDC). Using a gasket scraper, remove all the carbon from the piston surface.

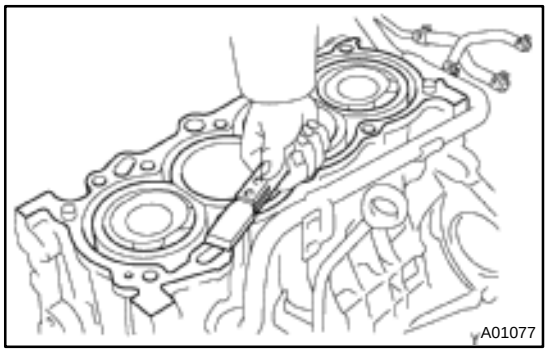

(b) Using a gasket scraper, remove all the gasket material from the cylinder block surface.

(c) Using compressed air, blow carbon and oil from the bolt holes.

CAUTION:

Protect your eyes when using high pressure compressed air.

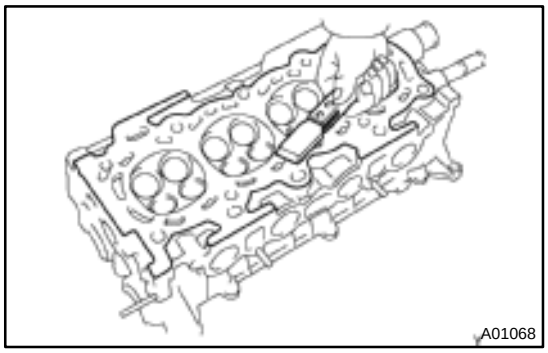

2. REMOVE GASKET MATERIAL

Using a gasket scraper, remove all the gasket material from the cylinder block contact surface.

NOTICE:

Be careful not to scratch the cylinder block contact surface.

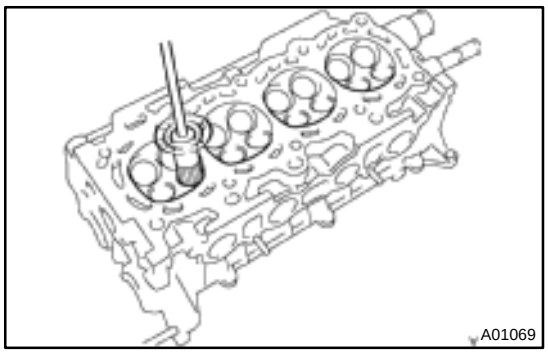

3. CLEAN COMBUSTION CHAMBERS

Using a wire brush, remove all the carbon from the combustion chambers.

NOTICE:

Be careful not to scratch the cylinder block contact surface.

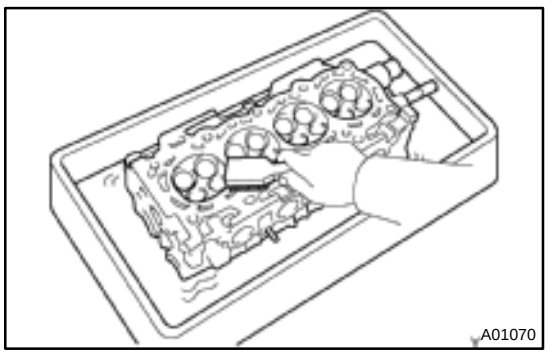

4. CLEAN CYLINDER HEAD

Using a soft brush and solvent, thoroughly clean the cylinder head.

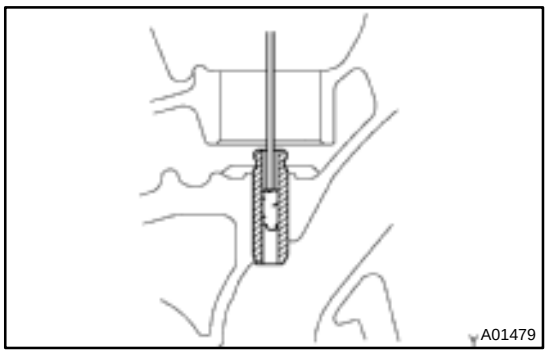

5. CLEAN VALVE GUIDE BUSHINGS

Using a valve guide bushing brush and solvent, clean all the guide bushings.

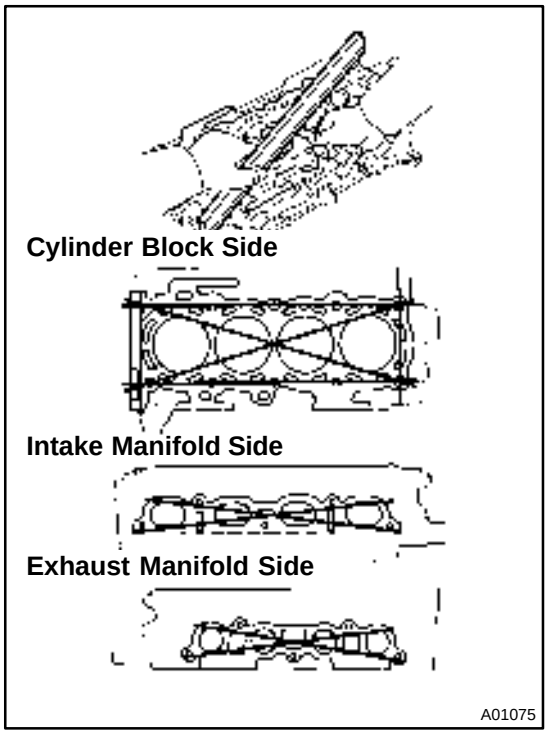

6. INSPECT FOR FLATNESS

Using a precision straight edge and feeler gauge, measure the surface contacting the cylinder block and the manifolds for warpage.

Maximum warpage:

Cylinder block side	0.05 mm (0.0020 in.)
Intake Manifold side	0.10 mm (0.0394 in.)
Exhaust manifold side	0.10 mm (0.0394 in.)

If warpage is greater than maximum, replace the cylinder head.

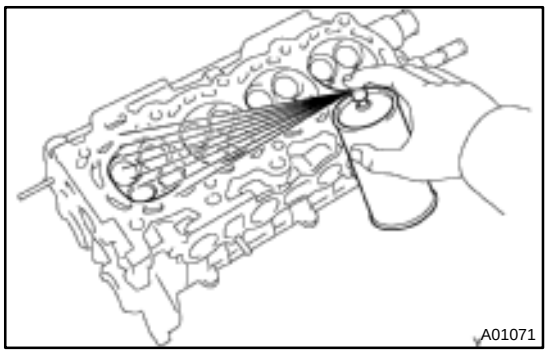

7. INSPECT FOR CRACKS

Using a dye penetrant, check the combustion chamber, intake ports, exhaust ports and cylinder block surface for cracks.
If cracked, replace the cylinder head.

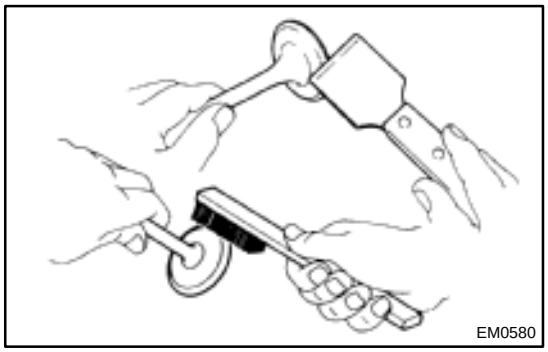

8. CLEAN VALVES

(a) Using a gasket scraper, chip off any carbon from the valve head.
(b) Using a wire brush, thoroughly clean the valve.

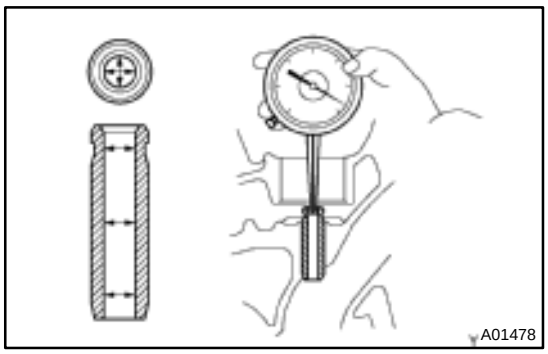

9. INSPECT VALVE STEMS AND GUIDE BUSHINGS

(a) Using a caliper gauge, measure the inside diameter of the guide bushing.

Bushing inside diameter:
5.010 – 5.030 mm (0.19724 – 0.19803 in.)

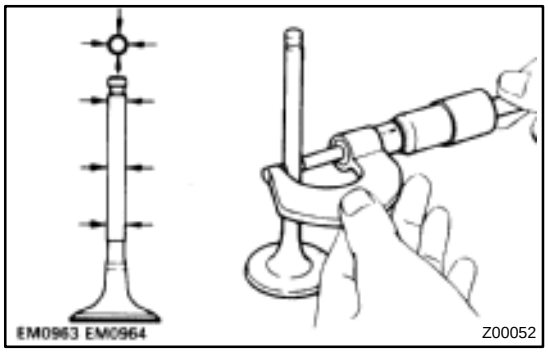

(b) Using a micrometer, measure the diameter of the valve stem.

Valve stem diameter:
Intake 4.970 – 4.985 mm (0.19567 – 0.19626 in.)
Exhaust 4.965 – 4.980 mm (0.19547 – 0.19606 in.)

(c) Subtract the valve stem diameter measurement from the guide bushing inside diameter measurement.

Standard oil clearance:
Intake 0.025 – 0.060 mm (0.00098 – 0.00236 in.)
Exhaust 0.030 – 0.065 mm (0.00118 – 0.00256 in.)
Maximum oil clearance:
Intake 0.08 mm (0.0031 in.)
Exhaust 0.10 mm (0.0039 in.)

If the clearance is greater than maximum, replace the valve and guide bushing.

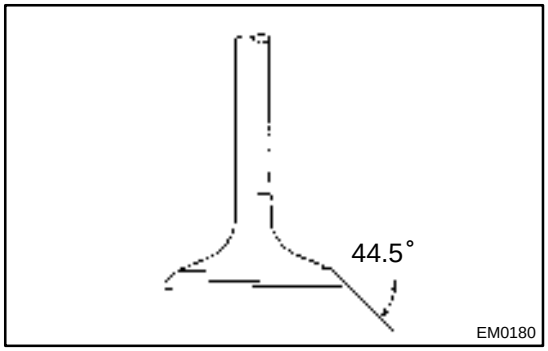

10. INSPECT VALVES

(a) Check the valve is ground to the correct valve face angle.
Valve face angle: 44.5°

(b) Check that the surface of the valve for wear.

If the valve face is worn, replace the valve.

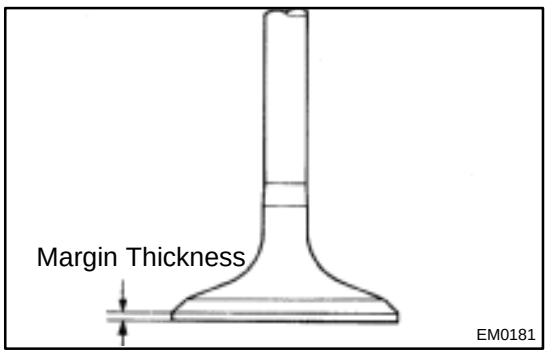

(c) Check the valve head margin thickness.

Standard margin thickness:
1.00 – 1.15 mm (0.0393 – 0.0453 in.)
Minimum margin thickness: 0.7 mm (0.028 in.)

If the margin thickness is less than minimum, replace the valve.

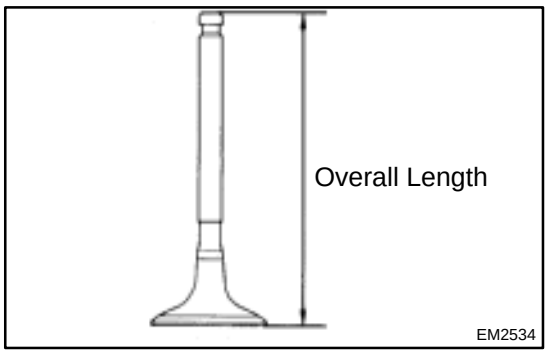

(d) Check the valve overall length.

Standard overall length:
Intake 89.25 mm (3.5138 in.)
Exhaust 87.90 mm (3.4606 in.)
Minimum overall length:
Intake 88.95 mm (3.5020 in.)
Exhaust 87.60 mm (3.4488 in.)

If the overall length is less than minimum, replace the valve.

(e) Check the surface of the valve stem tip for wear.

If the valve stem tip is worn, replace the valve.

11. INSPECT AND CLEAN VALVE SEATS

(a) Using a 45° carbide cutter, resurface the valve seats. Remove only enough metal to clean the seats.

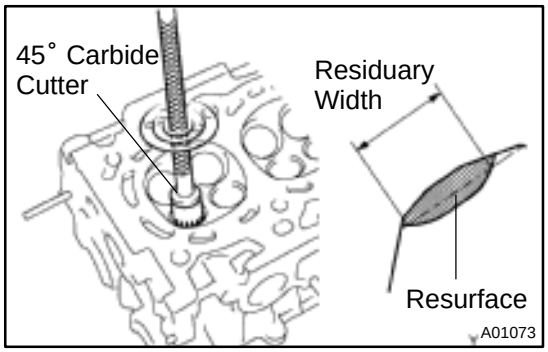

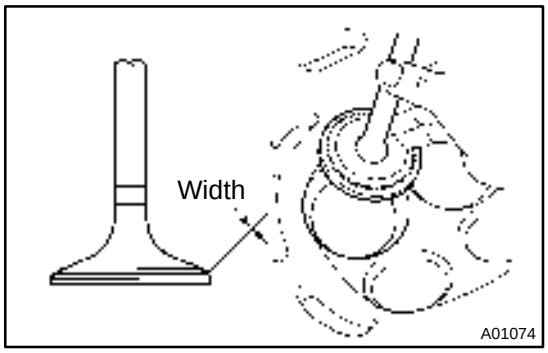

(b) Check the valve seating position.

Apply a light coat of prussian blue (or white lead) to the valve face. Lightly press the valve against the seat. Do not rotate valve.

(c) Check the valve face and seat for the following:

- If blue appears 360° around the face, the valve is concentric. If not, replace the valve.
- If blue appears 360° around the valve seat, the guide and face are concentric. If not, resurface the seat.
- Check that the seat contact is in the middle of the valve face with the following width:

1.0 – 1.4 mm (0.039 – 0.055 in.)

If not, correct the valve seats as follows:

(1) If the seating is too high on the valve face, use 20° and 45° cutters to correct the seat.

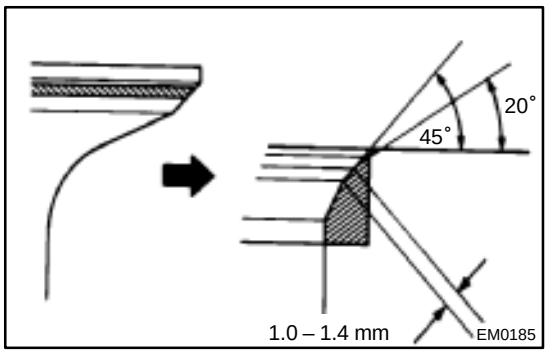

(2) If the seating is too low on the valve face, use 75° and 45° cutters to correct the seat.

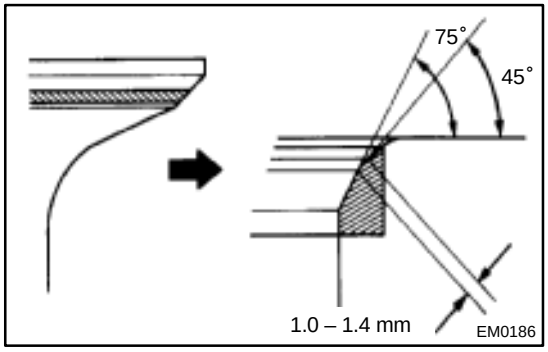

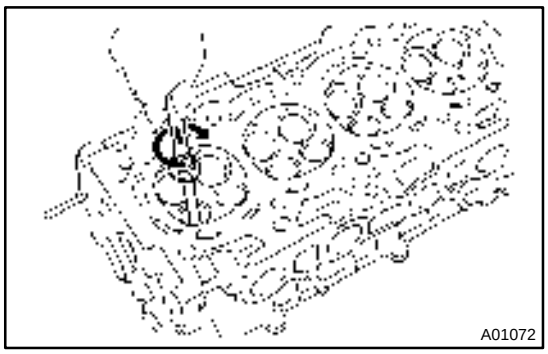
A01072

(d) Hand–lap the valve and valve seat with an abrasive compound.
(e) After hand–lapping, clean the valve and valve seat.

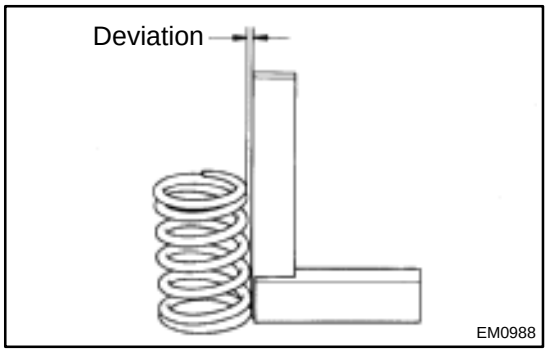

EM0988

12. INSPECT VALVE SPRINGS

(a) Using a steel square, measure the deviation of the valve spring.
Maximum deviation: 1.6 mm (0.063 in.)
Maximum angle (reference): 2°

If the deviation is greater than maximum, replace the valve spring.

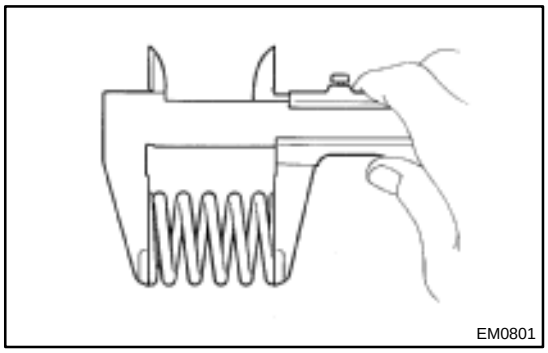
EM0801

(b) Using vernier calipers, measure the free length of the valve spring.
Free length: 59.77 mm (2.353 in.)

If the free length is not as specified, replace the valve spring.

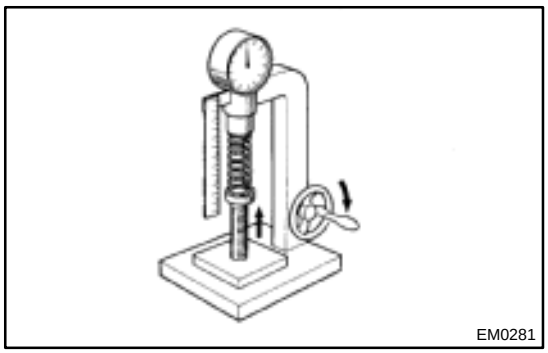
EM0281

(c) Using a spring tester, measure the tension of the valve spring at the specified installed length.
Installed tension:
140 – 154 N (14.3 – 15.7 kgf, 31.5 – 34.6 lbf)
at 32.5 mm (1.280 in.)
Maximum working tension:
180 – 198 N (18.4 – 20.2 kgf, 40.4 – 44.8 lbf)
at 25.1 mm (0.988 in.)

If the installed tension is not as specified, replace the valve spring

13. INSPECT CAMSHAFT FOR RUNOUT

(a) Place the camshaft on V–blocks.
(b) Using a dial indicator, measure the circle runout at the center journal.
Maximum circle runout: 0.03 mm (0.0012 in.)

If the circle runout is greater than maximum, replace the camshaft.

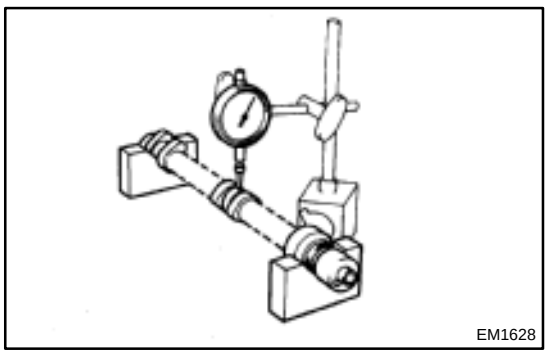
EM1628

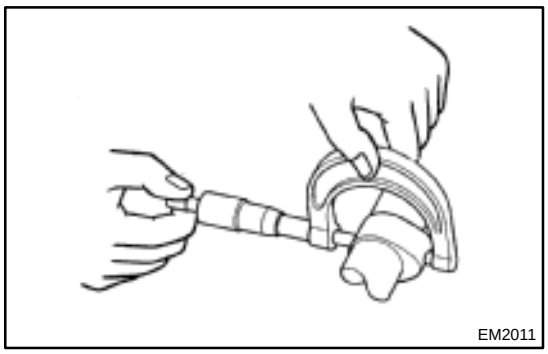
EM2011

14. INSPECT CAM LOBES

Using a micrometer, measure the cam lobe height.

Standard cam lobe height:
Intake 42.310 – 42.410 mm (1.62637 – 1.66968 in.)
Exhaust 44.046 – 44.146 mm (1.73409 – 1.73803 in.)
Minimum cam lobe height:
Intake 42.16 mm (1.6598 in.)
Exhaust 43.90 mm (1.7283 in.)

If the cam lobe height is less than minimum, replace the camshaft.

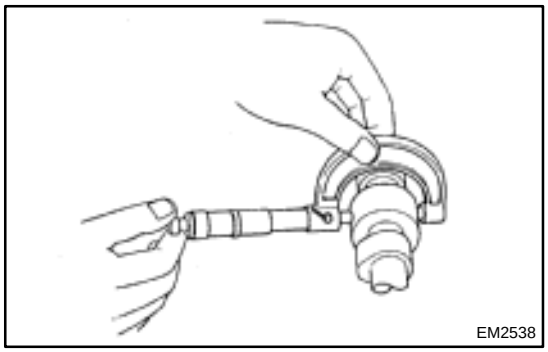
EM2538

15. INSPECT CAMSHAFT JOURNALS

Using a micrometer, measure the journal diameter.

No.1 journal diameter:
34.449 – 34.465 mm (1.35626 – 1.35689 in.)
Others journal diameter:
22.949 – 22.965 mm (0.90350 – 0.90413 in.)

If the journal diameter is not as specified, check the oil clearance.

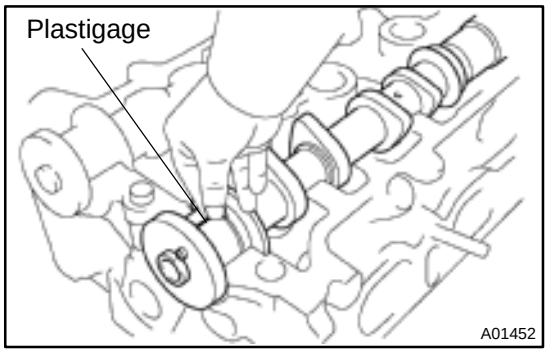

A01452

16. INSPECT CAMSHAFT JOURNAL CLEARANCE

(a) Clean the bearing caps and camshaft journals.
(b) Place the camshafts on the cylinder head.
(c) Lay a strip of Plastigage across each of the camshaft journal.

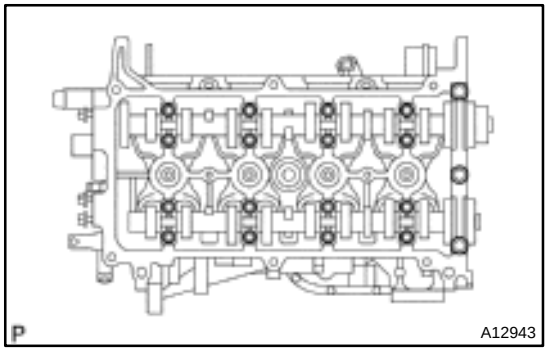
A12943

(d) Install the bearing caps (See page EM–45).

Torque:
No.1 23 N·m (235 kgf·cm, 17 ft·lbf)
No.2 12.7 N·m (130 kgf·cm, 10 ft·lbf)

NOTICE:
Do not turn the camshaft.

(e) Remove the bearing caps.

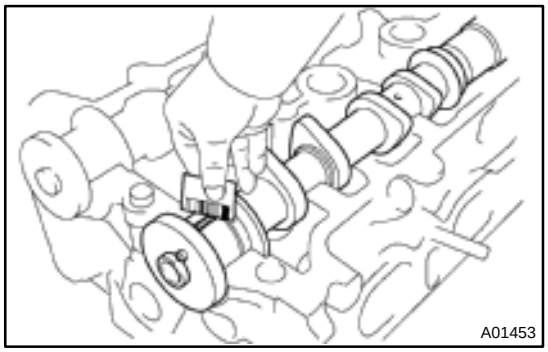
A01453

(f) Measure the plastigage at its widest point.

Standard oil clearance:
0.040 – 0.095 mm (0.00157 – 0.00374 in.)
Maximum oil clearance:
0.115 mm (0.00453 in.)

If the oil clearance is greater than maximum, replace the camshaft. If necessary, replace the bearing caps and cylinder head as a set.

(g) Completely remove the Plastigage.
(h) Remove the camshafts.

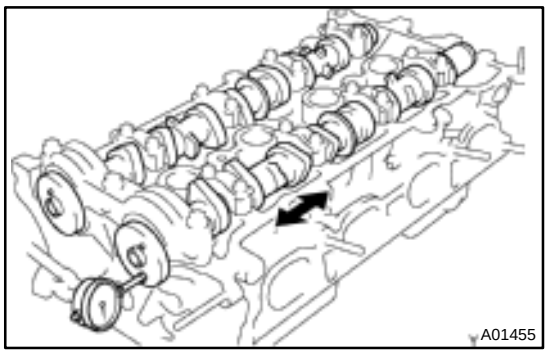

17. INSPECT CAMSHAFT THRUST CLEARANCE

(a) Install the camshafts (See page EM–45).

(b) Using a dial indicator, measure the thrust clearance while moving the camshaft back and forth.

Standard thrust clearance:
0.040 – 0.095 mm (0.0016 – 0.0037 in.)
Maximum thrust clearance:
0.11 mm (0.0043 in.)

If the thrust clearance is greater than maximum, replace the camshaft. If necessary, replace the bearing caps and cylinder head as a set.

(c) Remove the camshafts.

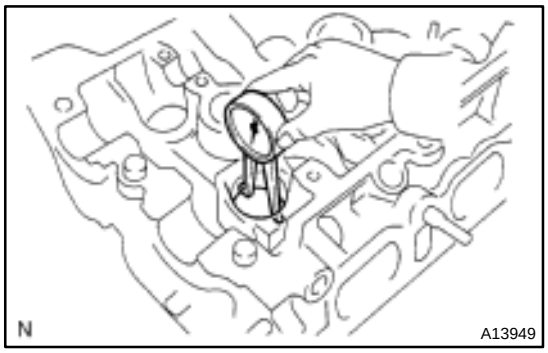

18. INSPECT VALVE LIFTERS AND LIFTER BORES

(a) Using a caliper gauge, measure the lifter bore diameter of the cylinder head.

Lifter bore diameter:
31.009 – 31.025 mm (1.22082 – 1.22145 in.)

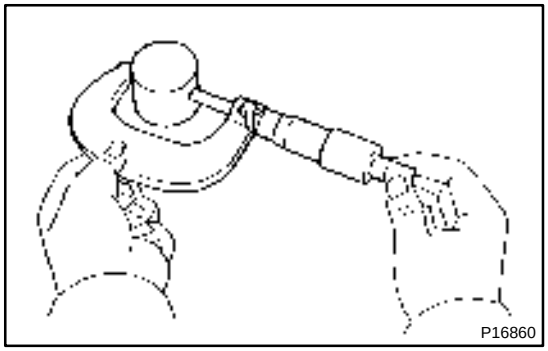

(b) Using a micrometer, measure the lifter diameter.

Lifter diameter:
30.966 – 30.976 mm (1.21913 – 1.21953 in.)

(c) Subtract the lifter diameter measurement from the lifter bore diameter measurement.

Standard oil clearance:
0.031 – 0.059 mm (0.00122 – 0.00232 in.)
Maximum oil clearance:
0.1 mm (0.004 in.)

If the oil clearance is greater than maximum, replace the lifter. If necessary, replace the cylinder head.

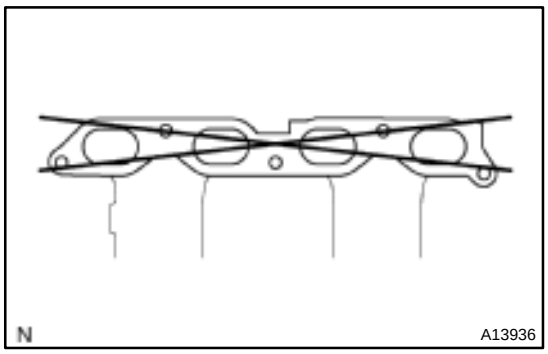

19. INSPECT INTAKE MANIFOLD

Using a precision straight edge and feeler gauge, measure the surface contacting the cylinder head for warpage.

Maximum warpage: 0.10 mm (0.0039 in.)

If warpage is greater than maximum, replace the manifold.

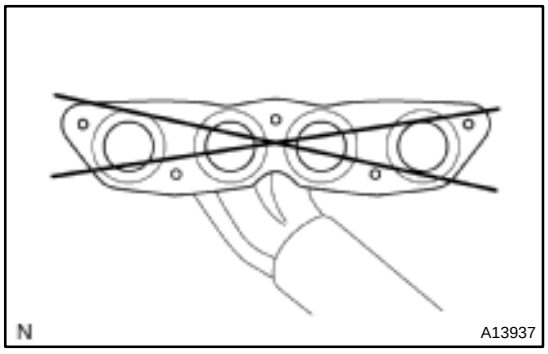

20. INSPECT EXHAUST MANIFOLD

Using a precision straight edge and feeler gauge, measure the surface contacting the cylinder head for warpage.

Maximum warpage: 0.70 mm (0.0276 in.)

If warpage is greater than maximum, replace the manifold.

EM16L–02

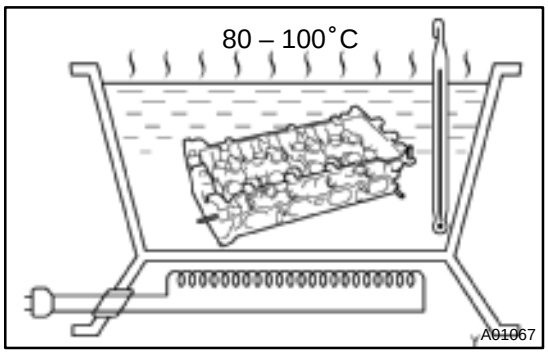

REPLACEMENT

REPLACE VALVE GUIDE BUSHINGS

(a) Gradually heat the cylinder head to 80 – 100˚C (176 – 212˚F).

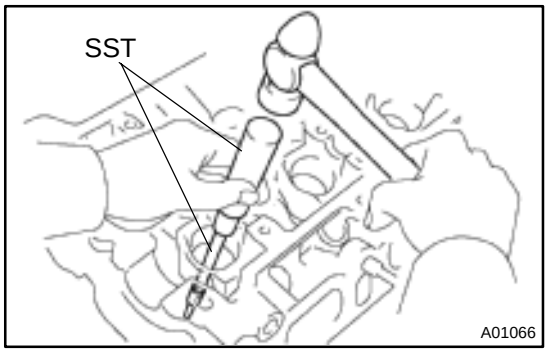

(b) Using SST and a hammer, tap out the guide bushing.
SST 09201–01055, 09950–70010 (09951–07100)

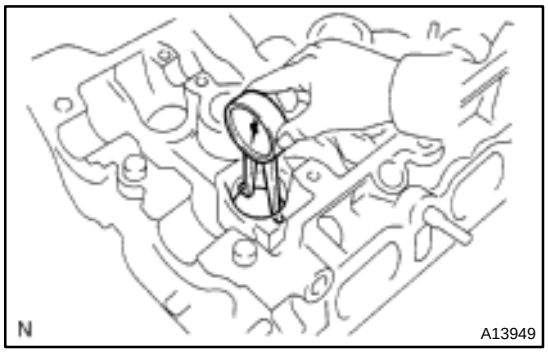

(c) Using a caliper gauge, measure the bushing bore diameter of the cylinder head.

(d) Select the new guide bushing (STD or O/S 0.05).

If the bushing bore diameter of the cylinder head is greater than 9.706 mm (0.38213 in.), machine the bushing bore to the following dimension:

9.735 – 9.756 mm (0.38327 – 0.38493 in.)

If the bushing bore diameter of the cylinder head is greater than 9.756 mm (0.38493 in.), replace the cylinder head.

Both intake and exhaust

Bushing bore diameter mm (in.)	Bushing size
9.685 – 9.706 (0.38130 – 0.38213)	Use STD
9.735 – 9.756 (0.38327 – 0.38493)	Use O/S 0.05

(e) Gradually heat the cylinder head to 80 – 100˚C (176 – 212˚F).

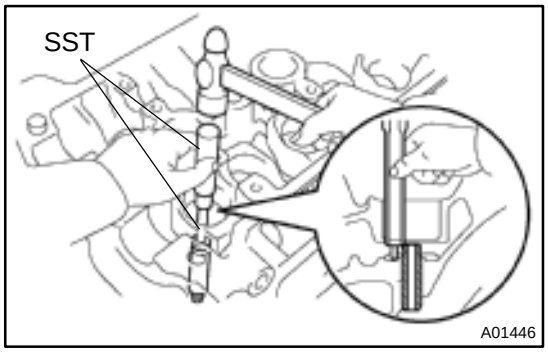

(f) Using SST and a hammer, tap in a new guide bushing to the specified protrusion height.
SST 09201–01055, 09950–70010 (09951–07100)
Protrusion height:
9.0 – 9.4 mm (0.354 – 0.370 in.)

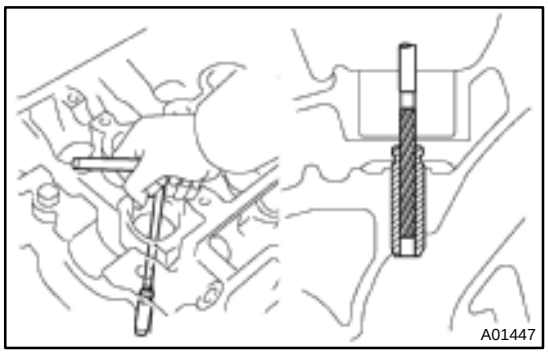

(g) Using a sharp 5 mm reamer, ream the guide bushing to obtain the standard specified clearance (See page EM–33) between the guide bushing and valve stem.

EM16M–02

REASSEMBLY

HINT:

- Thoroughly clean all parts to be assembled.
- Before installing the parts, apply fresh engine oil to all sliding and rotating surfaces.
- Replace oil seals with new ones.

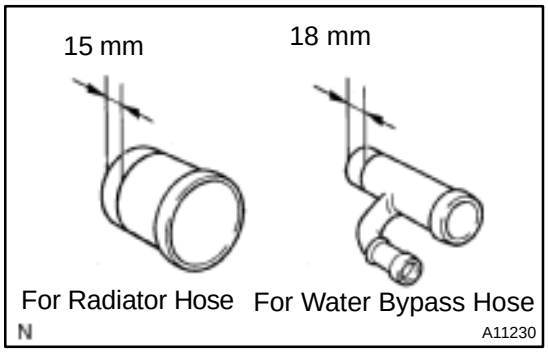

1. INSTALL WATER HOSE UNIONS

HINT:

When using a new cylinder head, water hose unions must be installed.

(a) Mark the standard position away from the edge, onto the water hose union.

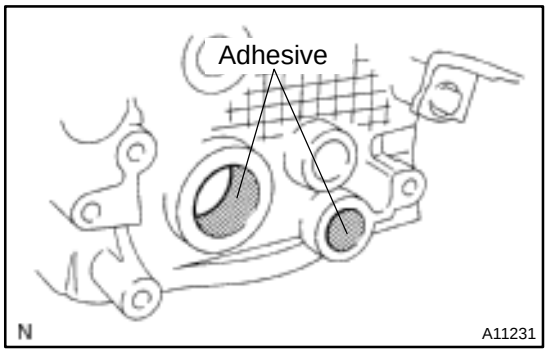

(b) Apply adhesive to the water hose union hole of the cylinder head.

Adhesive:
Part No.08833–00070, THREE BOND 1324 or equivalent

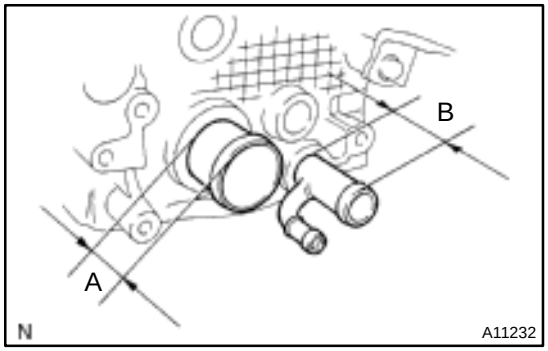

(c) Using a press, press in a new water hose union until there is protruding from the cylinder head.

Standard protrusion:
A 29 mm (1.14 in.)
B 44 mm (1.73 in.)

NOTICE:

Avoid pressing a new water hose union in too far by measuring the amount of protrusion while pressing.

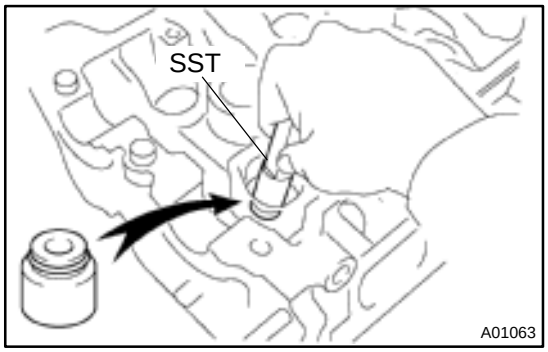

2. INSTALL VALVES

(a) Using SST, push in a new oil seal.
SST 09201–41020

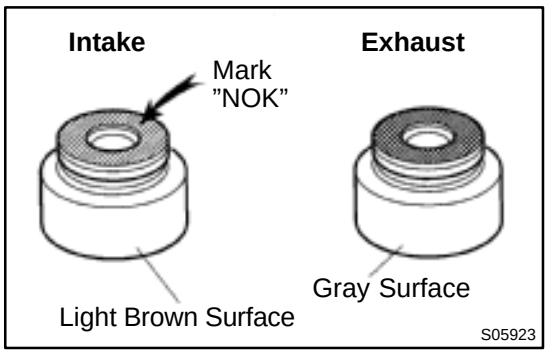

HINT:
The intake valve oil seal is light brown and the exhaust valve oil seal is gray.

NOTICE:

Pay much attention assembling the oil seal for intake and exhaust. Assembling the wrong one may cause a failure.

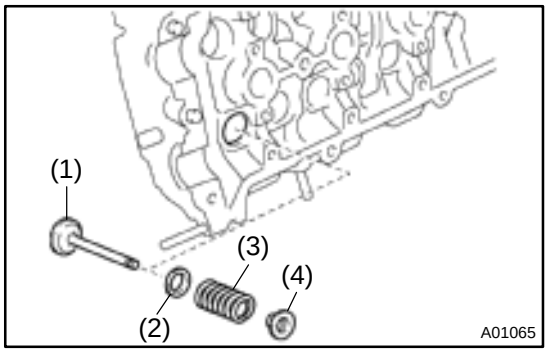

(b) Install the valve (1), spring (2), valve spring (3), and spring retainer (4).

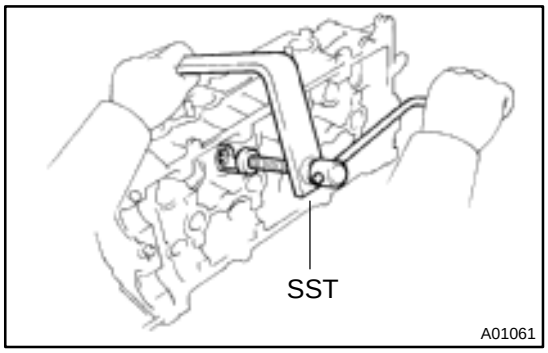

(c) Using SST, compress the valve spring and place the 2 keepers around the valve stem.
SST 09202–70020 (09202–00010)

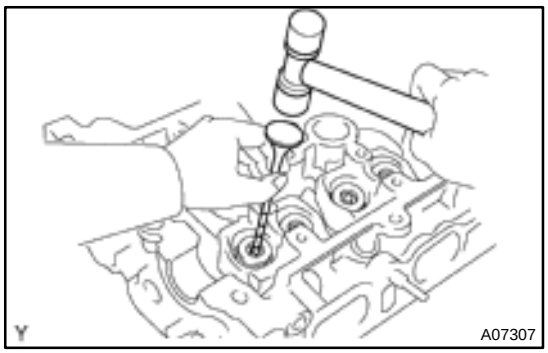

(d) Using a plastic–faced hammer and the valve stem (not in use) tip wound with vinyl tape, lightly tap the valve stem tip to ensure a proper fit.

NOTICE:

Be careful not to damage the valve stem tip.

3. INSTALL VALVE LIFTERS

(a) Install the valve lifter.

(b) Check that the valve lifter rotates smoothly by hand.

EM1IY–02

INSTALLATION

HINT:

- Thoroughly clean all parts to be assembled.
- Before installing the parts, apply fresh engine oil to all sliding and rotating surfaces.
- Replace all gaskets and oil seals with new ones.

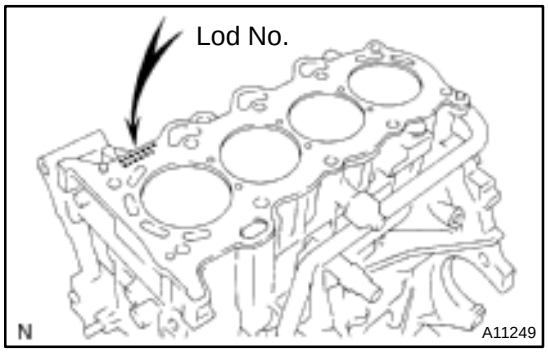

1. PLACE CYLINDER HEAD ON CYLINDER BLOCK

(a) Place a new cylinder head gasket on the cylinder block surface with the Lod No. stamp upward.

NOTICE:

Be careful of the installation direction.

(b) Place the cylinder head quietly in order not to damage the gasket with the bottom part of the head.

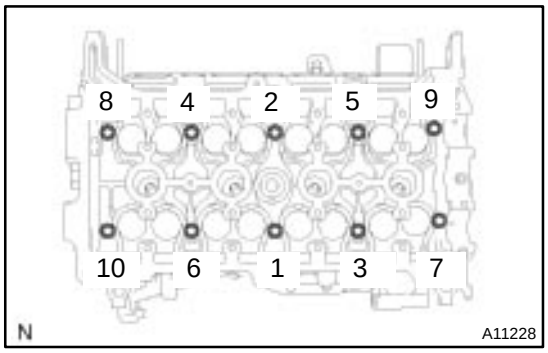

2. INSTALL CYLINDER HEAD BOLTS

HINT:

- The cylinder head bolts are tightened in 2 progressive steps (steps (b) and (d)).
- If any cylinder head bolt is broken or deformed, replace it.

(a) Apply a light coat if engine oil on the threads and under the heads of the cylinder head bolts.

(b) Using a 10 mm bi–hexagon wrench, install and uniformly tighten the 10 cylinder head bolts and plate washers, in several passes, in the sequence shown.

Torque: 29.4 N·m (300 kgf·cm, 22 ft·lbf)

If any one of the cylinder head bolts does not meet the torque specification, replace the cylinder head bolt.

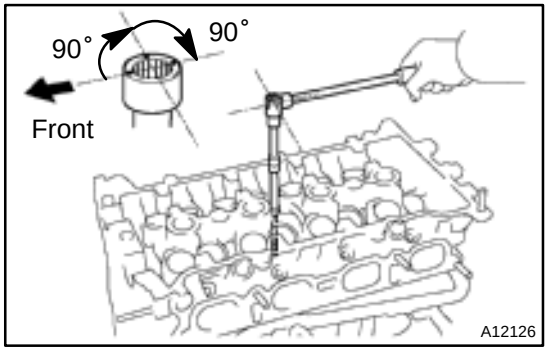

(c) Mark the front of the cylinder head bolt with paint.

(d) Retighten the cylinder head bolts by 90˚ and 90˚ in the numerical order shown.

(e) Check that the paint mark is now at a 180˚ angle to the front.

(f) Install the bolt holding the water bypass pipe to the cylinder head.

Torque: 9.0 N·m (92 kgf·cm, 80 in.·lbf)

(g) Connect the upper radiator hose to the water hose unions.
(h) Connect the heater hose to the water hose unions.

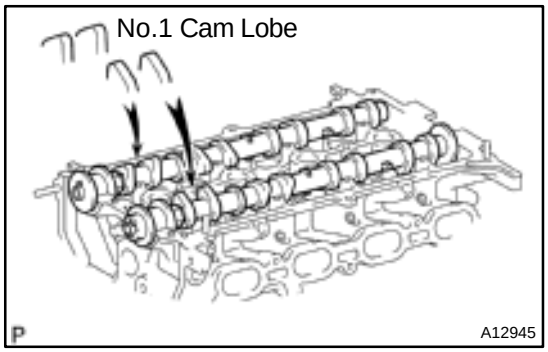

3. INSTALL CAMSHAFTS

(a) Place the 2 camshafts on the cylinder head with the No.1 cam lobes facing as shown the illustration.

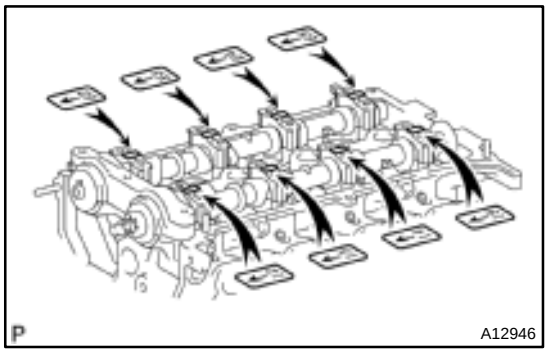

(b) Install the bearing caps in their proper locations.

HINT:

No. 2 camshaft bearing cap has a number and front mark.

(c) Apply a light coat of engine oil on the threads and under the heads of the bearing cap bolts.

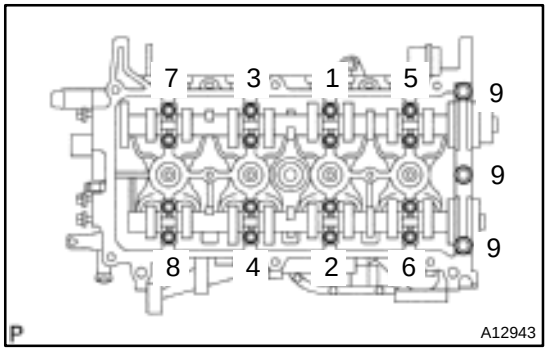

(d) Install and uniformly tighten the 19 bearing cap bolts.
After tightening the No.1 camshaft bearing cap, tighten then in several passes, in the sequence shown.
Torque:
No. 1 23 N·m (235 kgf·cm, 17 ft·lbf)
No. 2 12.7 N·m (130 kgf·cm, 10 ft·lbf)

4. INSTALL VALVE TIMING CONTROLLER ASSEMBLY AND CAMSHAFT TIMING SPROCKET

(a) Apply engine oil in the rage from the tip of the intake camshaft to 16 mm from that tip.
(b) Except leaded gasoline spec:
Align the timing mark on the valve timing controller assembly with the knock pin, and install the value timing controller assembly to the camshaft.

NOTICE:

Do not push valve timing controller assembly to the camshaft forcibly when installing it.

(c) Align the knock pin hole in the camshaft timing sprocket with the knock pin of the camshaft, and install the sprocket to the camshaft.

(d) Temporarily install the timing sprocket bolt.
(e) Hold the hexagon head portion of the camshaft with a wrench, and install the bolt.
Torque: 64 N·m (650 kgf·cm, 47 ft·lbf)

5. CHECK AND ADJUST VALVE CLEARANCE
(See page EM–5)

6. INSTALL CYLINDER HEAD COVER
(See page EM–21)

7. INSTALL OIL CONTROL VALVE

8. INSTALL OIL FILTER CAP

9. INSTALL PCV VALVE

10. INSTALL ECT SENSOR
(See page SF–49)

11. INSTALL CAMSHAFT POSITION SENSOR
(See page IG–10)

12. INSTALL TIMING CHAIN COVER
(See page EM–21)

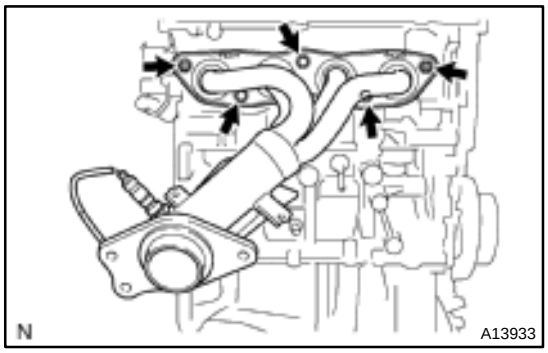

13. INSTALL EXHAUST MANIFOLD
(a) Install a new gasket and the exhaust manifold with the 3 bolts 2 nuts. Uniformly tighten the bolts and nuts in several passes.
Torque: 27 N·m (275 kgf·cm, 20 ft·lbf)
(b) Install the upper heat insulator with the 4 bolts.
Torque: 8.0 N·m (82 kgf·cm, 71 in.·lbf)

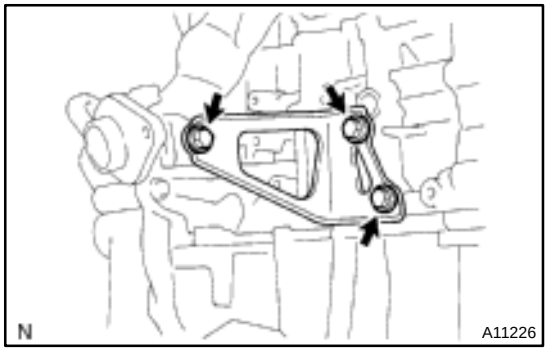

14. INSTALL EXHAUST MANIFOLD STAY
Install the manifold stay with the 3 bolts. Alternately tighten the bolts.
Torque: 37 N·m (377 kgf·cm, 27 ft·lbf)

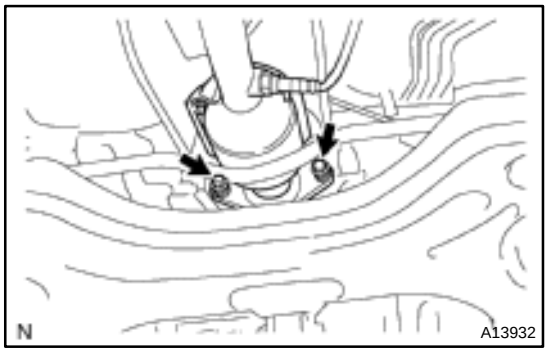

15. CONNECT FRONT EXHAUST PIPE TO EXHAUST MANIFOLD
(a) Place a new gasket to the exhaust manifold.
(b) Install the 2 bolts and 2 springs holding the front exhaust pipe to the exhaust manifold.
Torque: 62 N·m (630 kgf·cm, 46 ft·lbf)

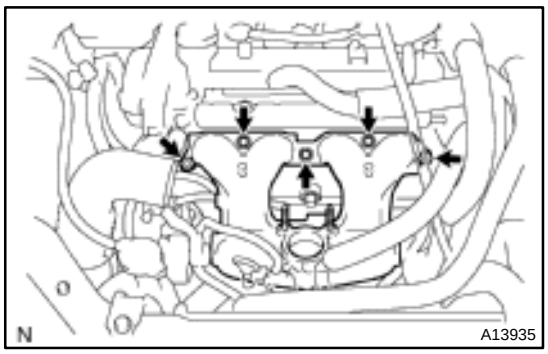

16. INSTALL INTAKE MANIFOLD

Install a new gasket, the intake manifold and 2 brackets with the 2 bolts and 2 nuts. Uniformly tighten the bolts and nuts in several passes.

Torque: 20 N·m (204 kgf·cm, 15 ft·lbf)

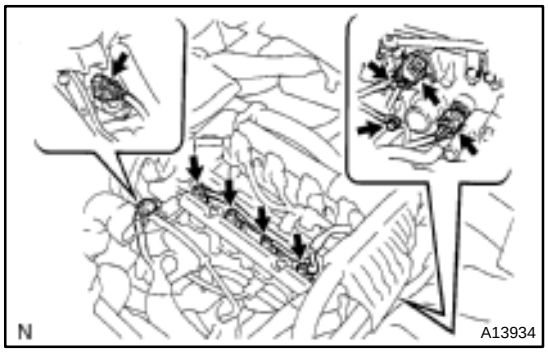

17. CONNECT ENGINE WIRE TO CYLINDER HEAD

(a) Install the engine wire protector to the cylinder head cover with the 2 bolts.
(b) Connect the water ECT sensor connector.
(c) Connect the camshaft position sensor connector.
(d) Connect the oil control valve connector.
(e) Connect the 4 injector connectors.

18. INSTALL THROTTLE BODY (See page SF–31)

19. INSTALL PCV HOSES

20. INSTALL SPARK PLUGS (See page IG–1)

21. INSTALL IGNITION COILS (See page IG–7)

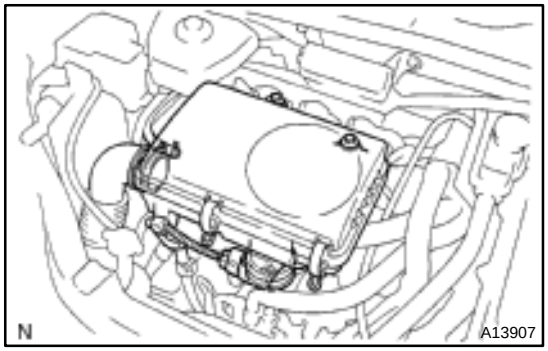

22. INSTALL AIR CLEANER ASSEMBLY

(a) Install the air cleaner assembly with the 2 bolts.
(b) Tighten the 2 hose clamps.
(c) Connect the EVAP hose to the air cleaner case.
(d) Connect the MAF meter connector.

23. INSTALL CONVERTER AND INVERTER ASSEMBLY (See page HV–18)

24. INSTALL OUTER FR COWL TOP PANEL ASSEMBLY (See page BO–32)

25. FILL WITH ENGINE COOLANT

26. FILL WITH HV COOLANT

27. INSTALL ENGINE UNDER COVERS

28. CONNECT BATTERY NEGATIVE (–) TERMINAL AND HV BATTERY SERVICE PLUG (See page HV–1)

29. ROAD TEST VEHICLE

Check for abnormal noises, shock slippage, correct shift points and smooth operation.

30. RECHECK ENGINE COOLANT AND HV COOLANT

ENGINE UNIT

COMPONENTS

EM1IZ–02

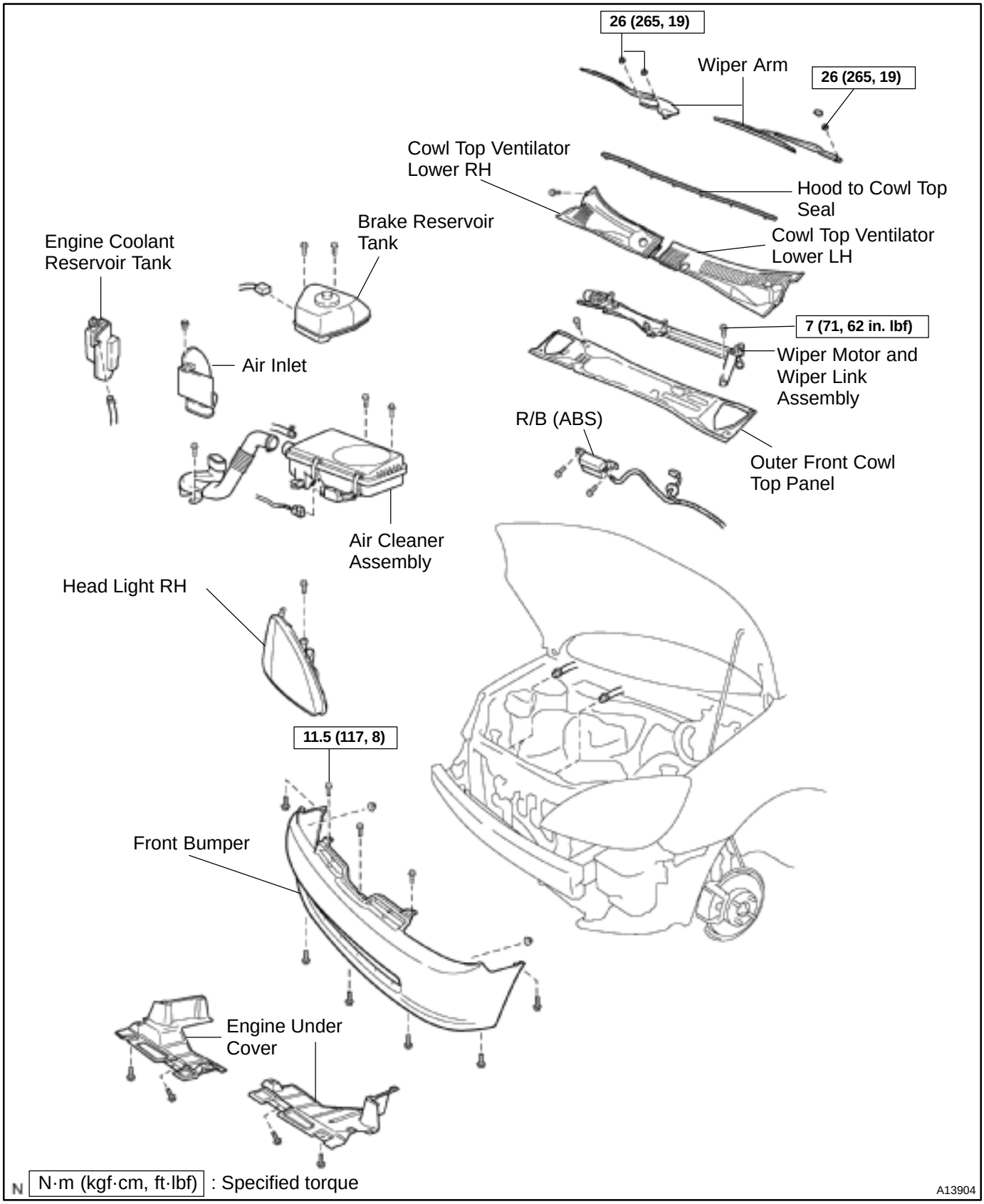

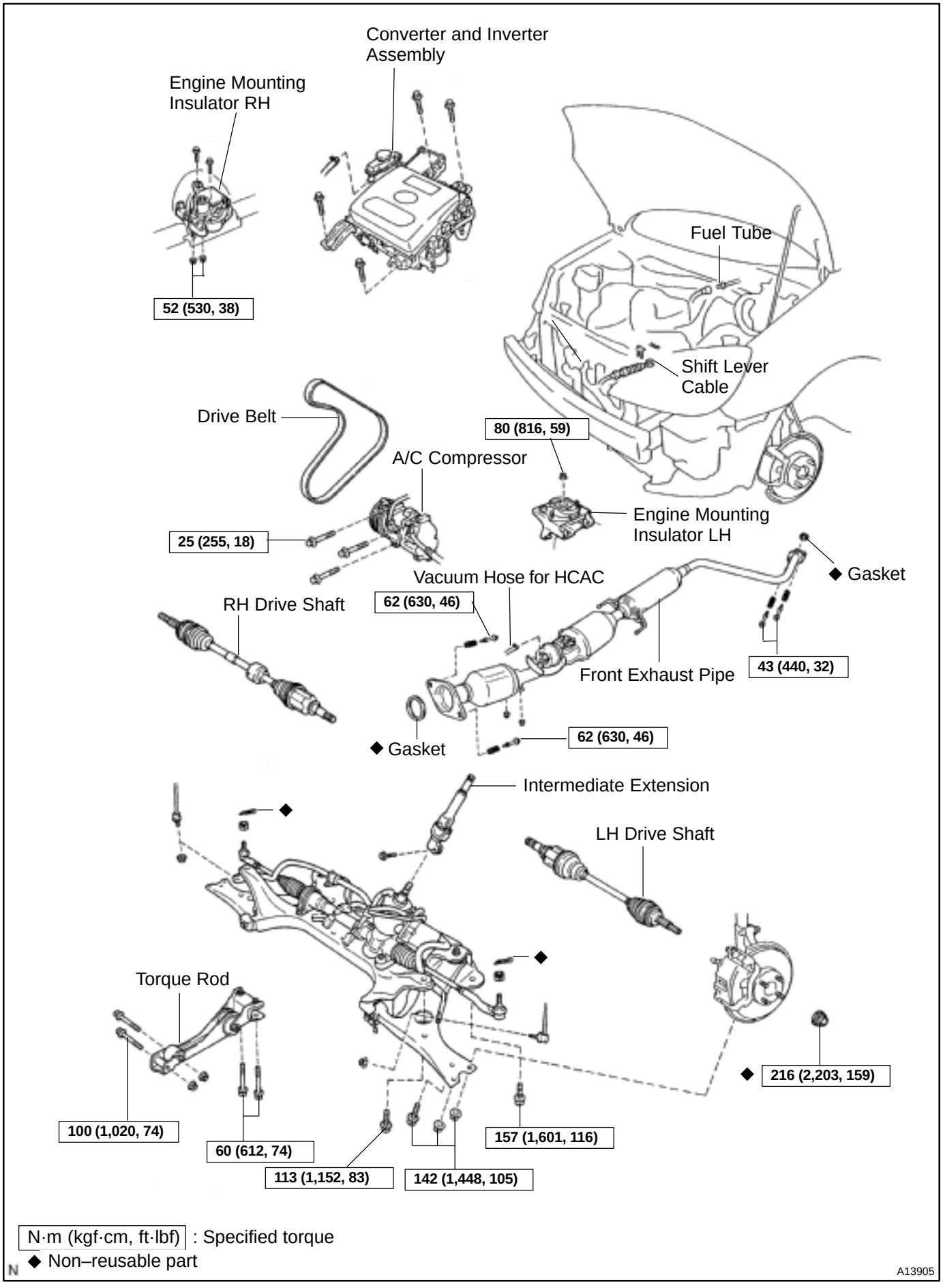
Converter and Inverter Assembly
Engine Mounting Insulator RH
52 (530, 38)
Fuel Tube
Shift Lever Cable
Drive Belt
80 (816, 59)
A/C Compressor
Engine Mounting Insulator LH
25 (255, 18)
Vacuum Hose for HCAC
◆ Gasket
RH Drive Shaft
62 (630, 46)
43 (440, 32)
Front Exhaust Pipe
◆ Gasket
62 (630, 46)
Intermediate Extension
LH Drive Shaft
Torque Rod
◆ 216 (2,203, 159)
100 (1,020, 74)
60 (612, 74)
157 (1,601, 116)
113 (1,152, 83)
142 (1,448, 105)
N·m (kgf·cm, ft·lbf) : Specified torque
◆ Non–reusable part
A13905

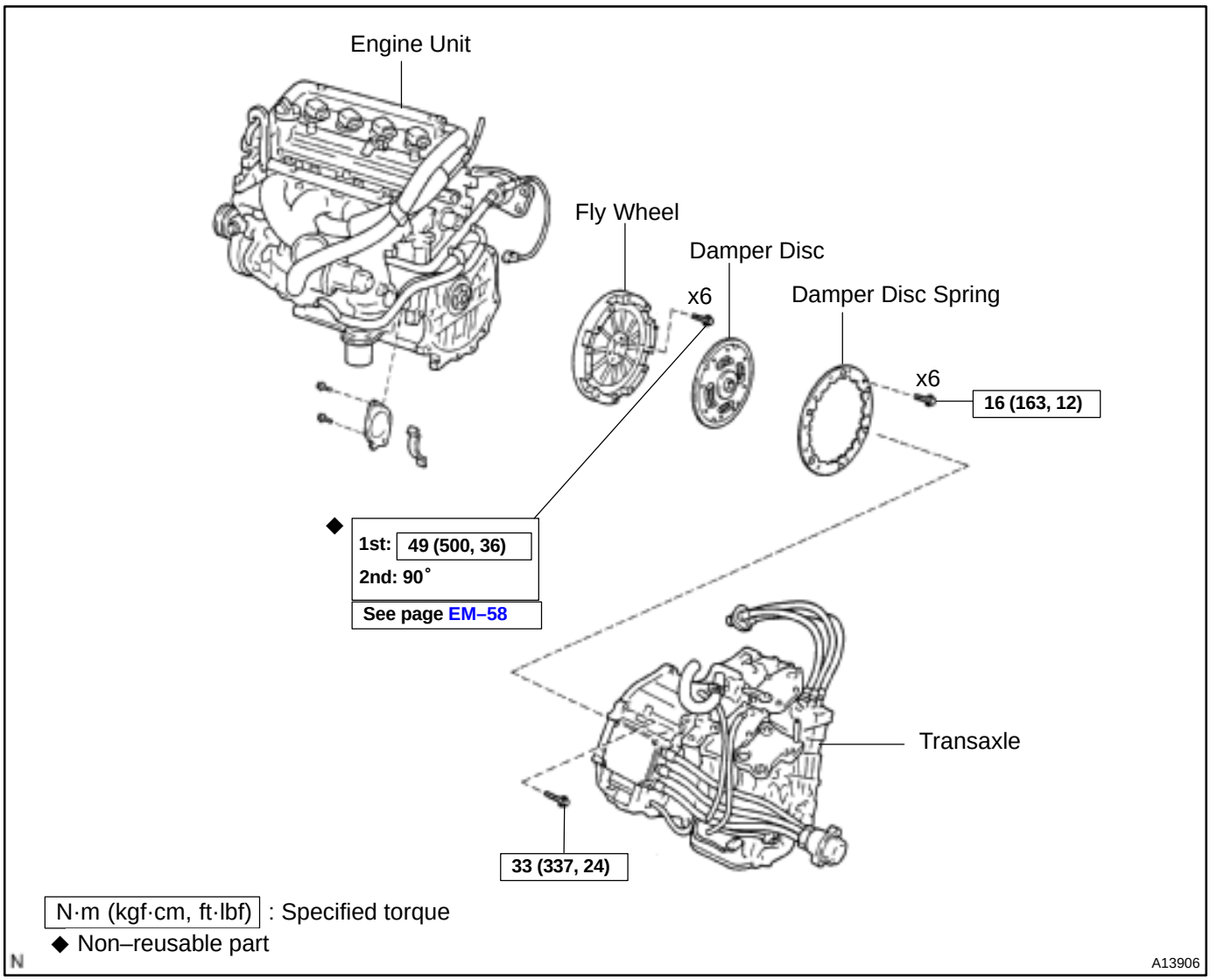
Engine Unit
Fly Wheel
Damper Disc
x6
Damper Disc Spring
x6
16 (163, 12)
◆
1st: 49 (500, 36)
2nd: 90°
See page EM–58
Transaxle
33 (337, 24)
N·m (kgf·cm, ft·lbf) : Specified torque
◆ Non–reusable part
N
A13906

EM1J0–02

REMOVAL

1. DISCONNECT BATTERY NEGATIVE (–) TERMINAL AND HV BATTERY SERVICE PLUG
(See page HV–1)

2. REMOVE OUTER FRONT COWL TOP PANEL ASSEMBLY (See page BO–32)

3. DRAIN HV COOLANT (See page HT–8)

4. DRAIN ENGINE COOLANT

5. REMOVE CONVERTER AND INVERTER ASSEMBLY (See page HV–18)

6. REMOVE HEATER UNIT WATER PUMP
(See page AC–55)

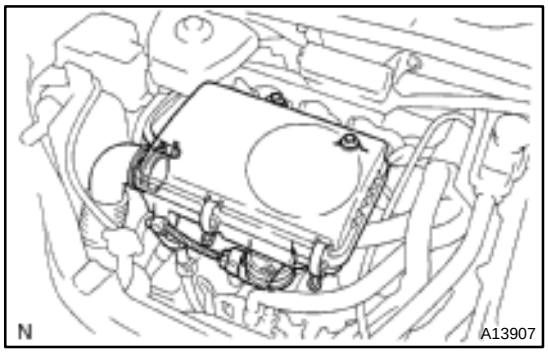

7. REMOVE AIR CLEANER ASSEMBLY

(a) Disconnect the MAF meter connector.
(b) Disconnect the EVAP hose from the air cleaner case.
(c) Loosen the 2 hose clamps.
(d) Remove the 2 bolts and air cleaner assembly.

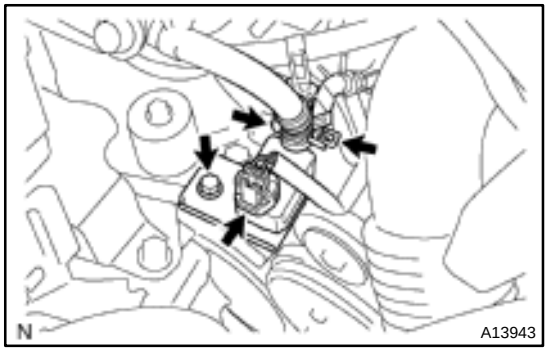

8. DISCONNECT CONNECTORS, CLAMPS AND HOSES

(a) Disconnect the engine wire clamps.
(b) Disconnect the heated oxygen sensor connector.
(c) Disconnect the 2 power steering connectors.
(d) Disconnect the VSV connector for purge line.
(e) Disconnect the VSV hose for purge line.
(f) Disconnect the ground strap from RH fender apron.
(g) Disconnect the ground strap from LH fender apron.

9. REMOVE AIR INLET

10. REMOVE ENGINE COOLANT RESERVOIR TANK

11. DISCONNECT 2 RADIATOR HOSES FROM RADIATOR

12. DISCONNECT HEATER HOSE FROM CYLINDER BLOCK

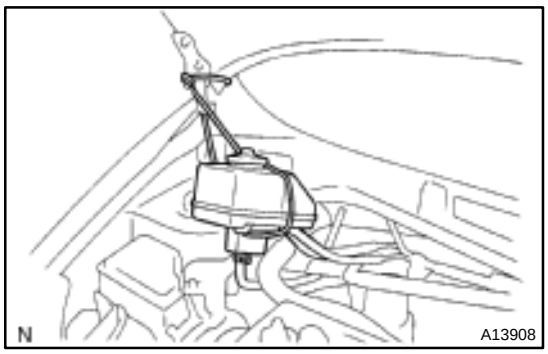

13. DISCONNECT SHIFT LEVER CABLE

14. REMOVE BRAKE RESERVOIR TANK

(a) Disconnect the brake fluid level sensor connector.

(b) Remove the 2 bolts and remove the reservoir tank and suspend it.

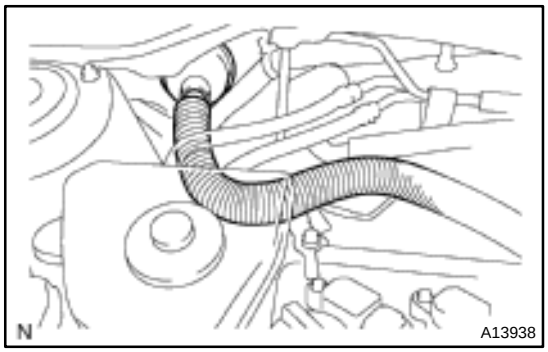

15. DISCONNECT ENGINE WIRE FROM CABIN

(a) Remove the ECM (See page SF–63).

(b) Disconnect the grommet from the cowl panel, and pull out the engine wire.

16. REMOVE J/B NO. 1 FROM RH FENDER APRON

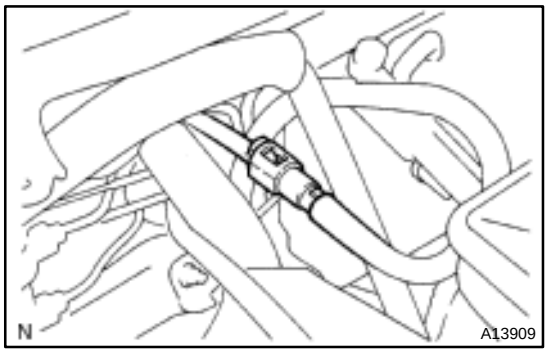

17. DISCONNECT FUEL TUBE

Disconnect the fuel tube from the fuel pump.

18. REMOVE DRIVE BELT

19. REMOVE ENGINE UNDER COVERS

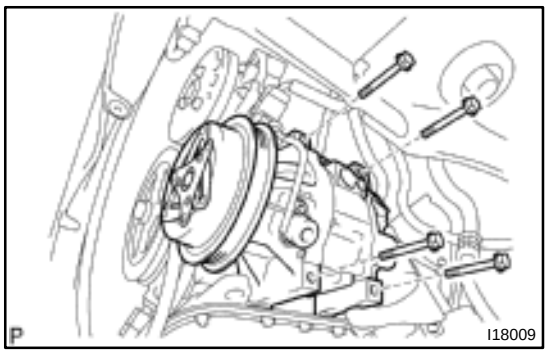

20. REMOVE A/C COMPRESSER

(a) Disconnect the A/C compresser connector.

(b) Remove the 4 bolts and disconnect the A/C compresser from the engine.

HINT:

Suspend the A/C compresser securely.

21. DISCONNECT INTERMEDIATE EXTENSION FROM STEERING ASSEMBLY (See page SR–6)

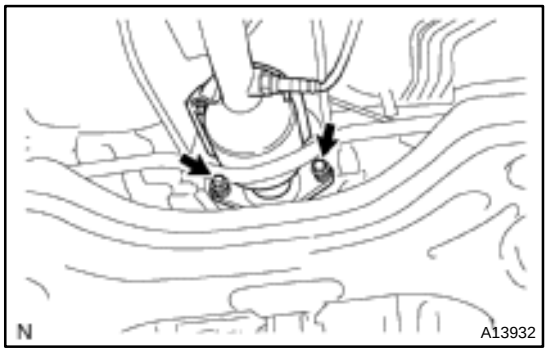

22. REMOVE EXHAUST PIPE

(a) Disconnect the heated oxygen sensor from the exhaust pipe.

(b) Remove the 2 springs and 3 bolts.

(c) Disconnect the 2 O–rings, and remove the exhaust pipe and 2 gaskets.

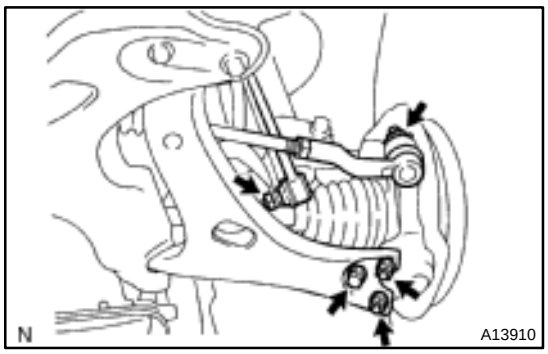

23. DISCONNECT TIE ROD END FROM STEERING KNUCKLE (See page SA–9)

24. DISCONNECT STABILIZER BAR LINK

Remove the nut and disconnect the stabilizer bar link from the suspension member.

25. DISCONNECT BALL JOINT FROM LOWER ARM

Remove the 2 bolts and 4 nuts, disconnect the ball joint.

26. REMOVE DRIVE SHAFTS (See page SA–17)

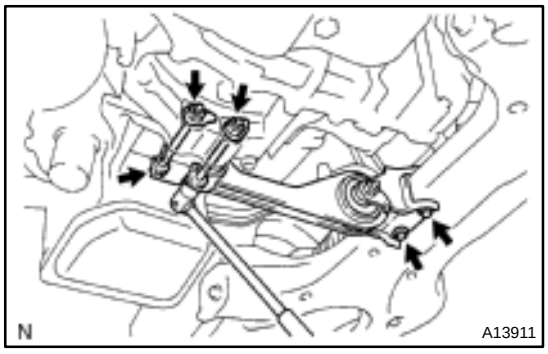

27. REMOVE TORQUE ROD

Remove the 4 bolts and 2 nuts and torque rod from the body.

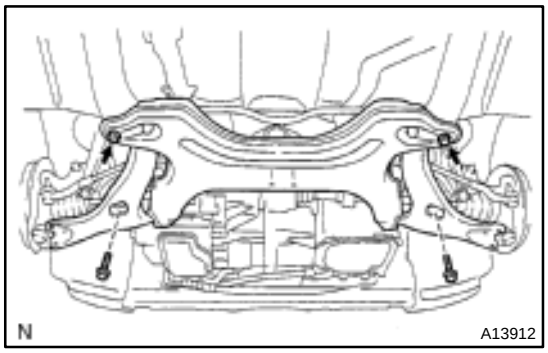

28. REMOVE SUSPENSION MEMBER

Remove the 4 bolts and disconnect the suspension member from the body.

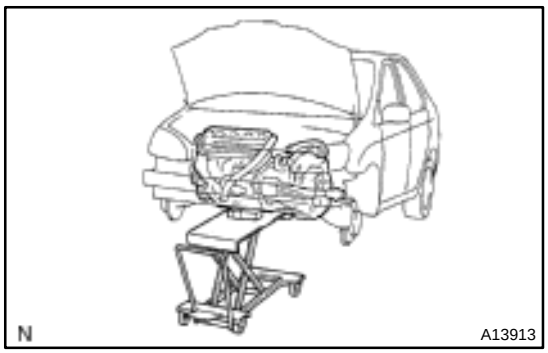

29. SET ENGINE JACK

NOTICE:

Using chain, hold the engine tightly.

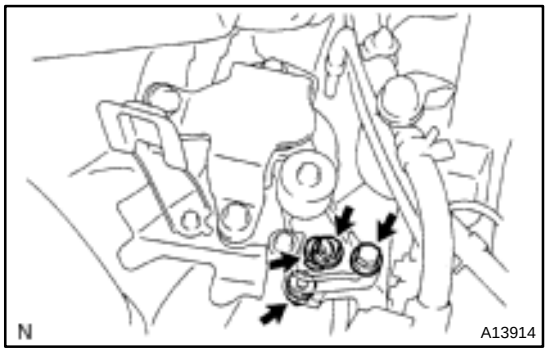

30. DISCONNECT ENGINE MOUNTINGS

(a) Remove the 2 bolts, 2 nuts and disconnect the RH engine mounting insulator from the bracket.

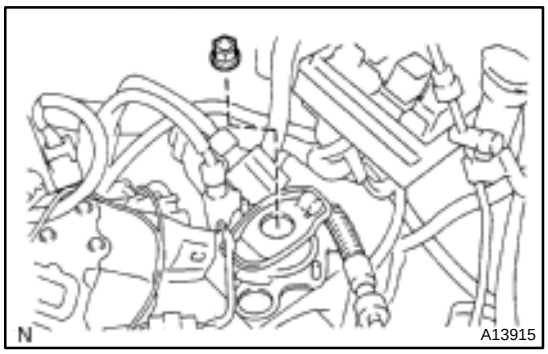

(b) Remove the nut and disconnect the LH engine mounting from the insulator.

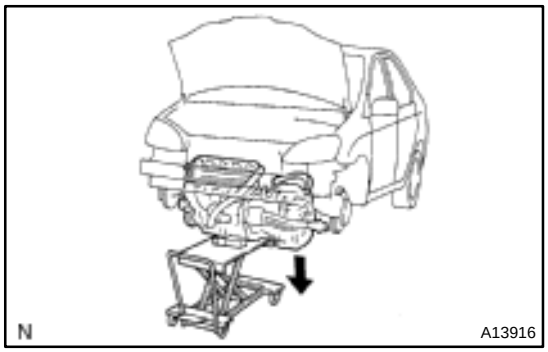

31. REMOVE ENGINE AND TRANSAXLE ASSEMBLY

(a) Lower the engine out of vehicle slowly and carefully.

NOTICE:

Make sure the engine is clear of all wiring, hoses and cables.

(b) Using a engine sliding device, and place the engine and transaxle assembly onto the stand.

32. SEPARATE ENGINE AND TRANSAXLE

(a) Remove the 2 bolts and dust cover.

(b) Remove the 6 bolts and transaxle from the engine.

33. REMOVE DAMPER DISC

Using SST, hold the crankshaft pulley, remove the 6 bolts and damper disc and spring.

SST 09213–58012 (91111–580845), 09330–00021

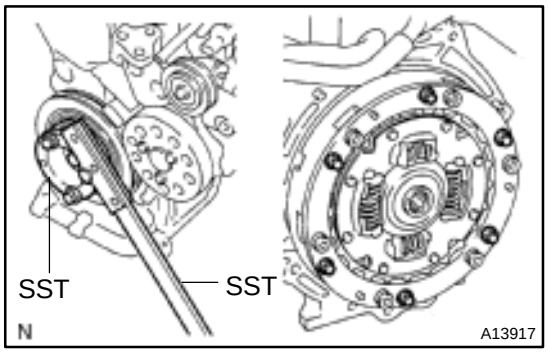

34. REMOVE FLYWHEEL

Using SST, hold the crankshaft pulley, remove the 6 bolts and flywheel.

SST 09213–58012 (91111–580845), 09330–00021

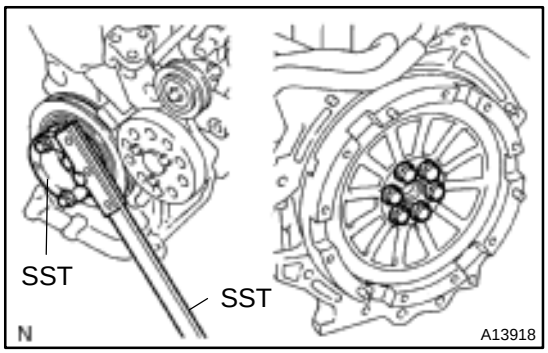

EM1J2–02

INSTALLATION

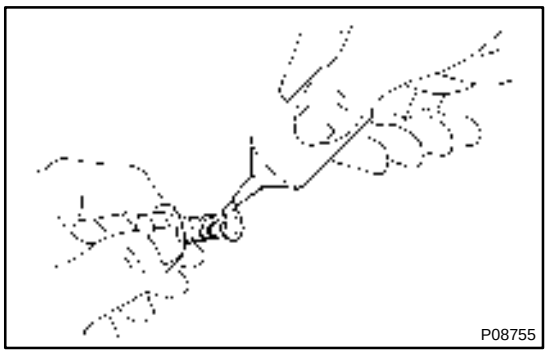

1. INSTALL FLYWHEEL

(a) Apply adhesive to 2 or 3 threads of the bolt end.
Adhesive: Part No. 08833–00070, THREE BOND 1324 or equivalent

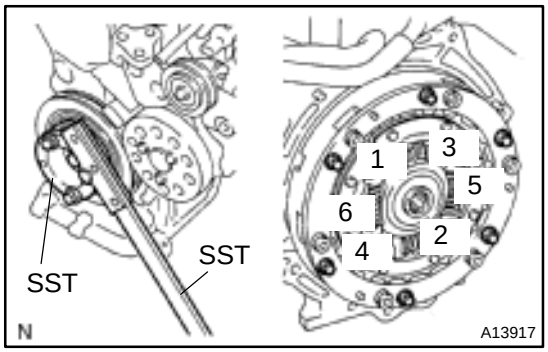

(b) Install and uniformly tighten the new 6 bolts in several passes, in the sequence shown.
Torque: 84 N·m (857 kgf·cm, 62 ft·lbf)

(c) Retighten the flywheel bolts by 90° in the numerical order shown.

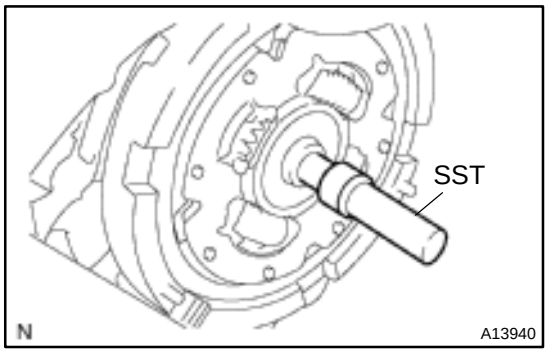

2. INSTALL DAMPER DISC

(a) Insert SST in the damper disc, then insert them in the flywheel.
SST 09301–00110

HINT:
Take care not to insert damper disc in the wrong direction.

(b) Set the damper spring on the damper disc.

(c) Following the procedures shown in the illustration, tighten the 6 bolts in the order starting the bolt locating near the knock pin on the top.
Torque: 16 N·m (163 kgf·cm, 12 ft·lbf)

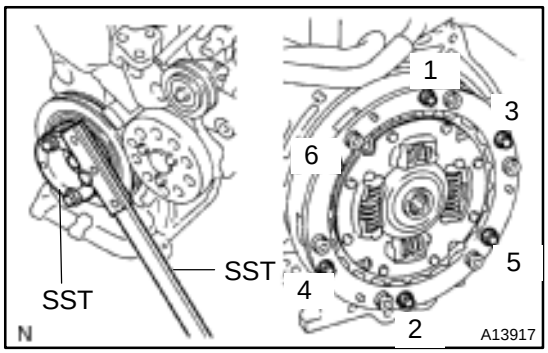

HINT:
- Following the order in the illustration, tighten the bolts at a time evenly.
- Move SST up and down, right and left lightly, after checking that the disc in the center, tighten the bolts.

3. INSTALL TRANSAXLE TO ENGINE

(a) Attach the transaxle to the engine, and install the 6 bolts.
Torque: 33 N·m (337 kgf·cm, 24 ft·lbf)

(b) Install the dust cover.

(c) Install the LH engine mounting bracket.
Torque: 52 N·m (530 kgf·cm, 38 ft·lbf)

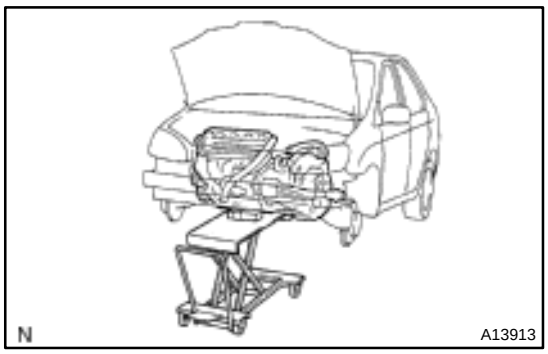

4. SET ENGINE JACK

NOTICE:

Using a chain, hold the engine tightly.

5. INSTALL ENGINE AND TRANSAXLE ASSEMBLY IN VEHICLE

(a) Raise the engine into the engine compartment.

(b) Keep the engine level, and align RH and LH mountings with the insulator.

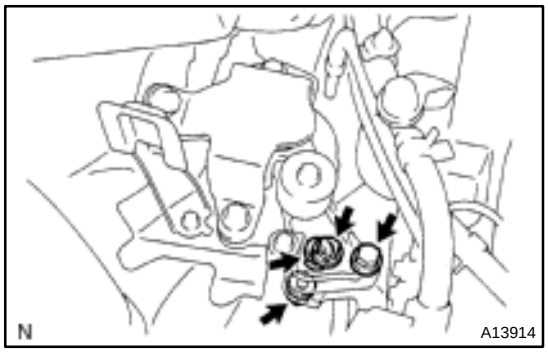

(c) Connect the LH mounting bracket to the insulator with the nut.

Torque: 80 N·m (816 kgf·cm, 59 ft·lbf)

(d) Connect the RH mounting bracket to the insulator with the 2 bolts and 2 nuts.

Torque: 52 N·m (530 kgf·cm, 38 ft·lbf)

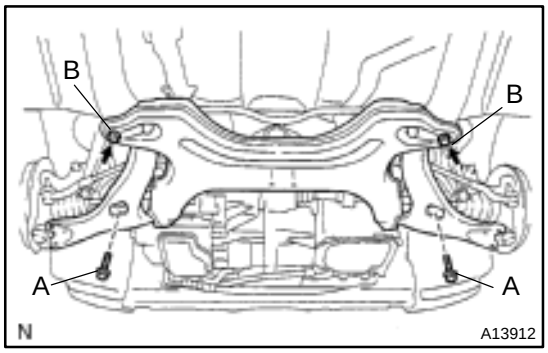

6. INSTALL SUSPENSION MEMBER

Connect the suspension member with the 4 bolts.

Torque:

Bolt A: 113 N·m (1,152 kgf·cm, 83 ft·lbf)

Bolt B: 157 N·m (1,601 kgf·cm, 116 ft·lbf)

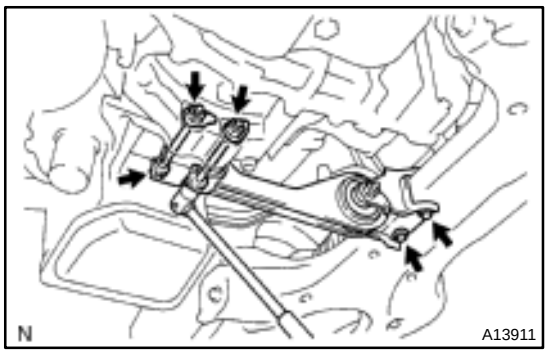

7. INSTALL TORQUE ROD

(a) Install the torque rod through bolt and nut.

Torque: 100 N·m (1,020 kgf·cm, 74 ft·lbf)

(b) Install the 2 bolts.

Torque: 60 N·m (612 kgf·cm, 44 ft·lbf)

8. INSTALL DRIVE SHAFTS (See page SA–23)

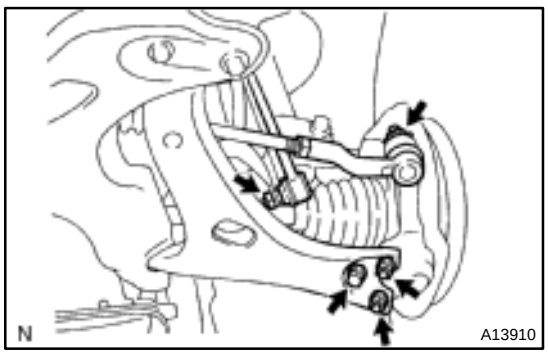

9. CONNECT BALL JOINT TO LOWER ARM

Torque: 142 N·m (1,448 kgf·cm, 105 ft·lbf)

10. CONNECT STABILIZER BAR LINK

Torque: 74 N·m (755 kgf·cm, 55 ft·lbf)

11. CONNECT TIE ROD END TO STEERING KNUCKLE (See page SA–14)

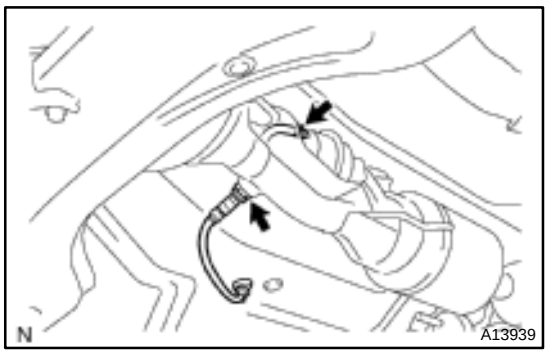

12. INSTALL EXHAUST PIPE

(a) Install the 2 gaskets to the exhaust pipe and connect the 2 O–rings.

(b) Install the 2 springs and 3 bolts.

Torque:
Front exhaust pipe: 62 N·m (630 kgf·cm, 46 ft·lbf)
Tailpipe: 32 N·m (326 kgf·cm, 24 ft·lbf)

(c) Connect the hose to the actuator.

(d) Connect the heated oxygen sensor.

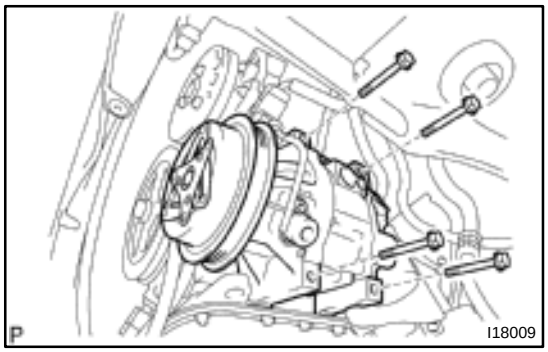

13. INSTALL A/C COMPRESSER

(a) Connect the A/C compresser to the engine with the 4 bolts.

Torque: 25 N·m (255 kgf·cm, 18 ft·lbf)

(b) Connect the A/C compresser connector.

14. CONNECT INTERMEDIATE EXTENSION STEERING ASSEMBLY (See page SR–14)

15. INSTALL DRIVE BELT (See page SA–23)

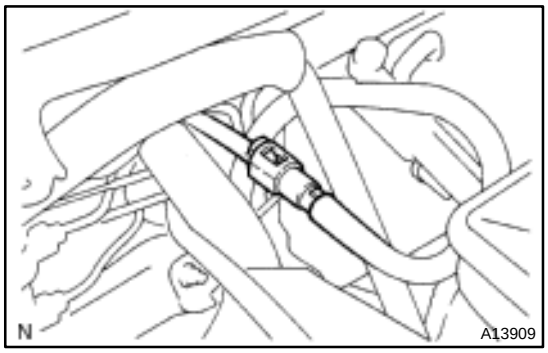

16. CONNECT FUEL TUBE

17. INSTALL J/B NO. 1 TO RH FENDER APRON

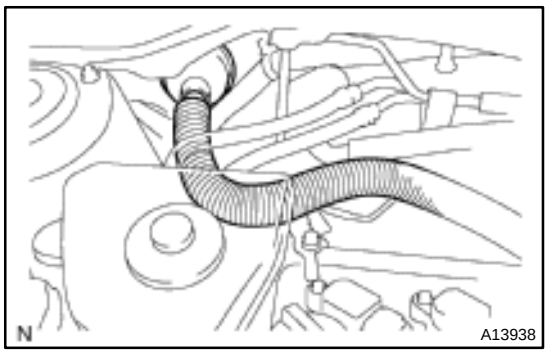

18. CONNECT ENGINE WIRE TO CABIN

(a) Pull in the engine wire to the cowk panel and connect the grommet.

(b) Connect the ECM connectors.

(c) Install the ECM (See page SF–63).

19. INSTALL BRAKE RESERVOIR TANK

(a) Install the reservoir tank with the 2 bolts.

(b) Connect the brake fluid level sensor connector.

20. CONNECT SHIFT LEVER CABLE TO TRANSAXLE

21. CONNECT HEATER HOSE TO CYLINDER BLOCK

22. CONNECT 2 RADIATOR HOSES TO RADIATOR

23. INSTALL ENGINE COOLANT RESERVOIR TANK

24. INSTALL AIR INLET

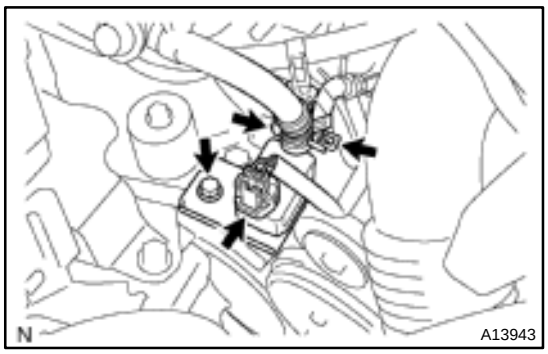

25. CONNECT CONNECTORS, CLAMPS AND HOSES

(a) Connect the Ground strap from LH fender apron.
(b) Connect the Ground strap from RH fender apron.
(c) Connect the VSV hose for purge line.
(d) Connect the VSV connector for purge line.
(e) Connect the 2 power steering connectors.
(f) Connect the Heated oxygen sensor connector.
(g) Connect the Engine wire clamps.

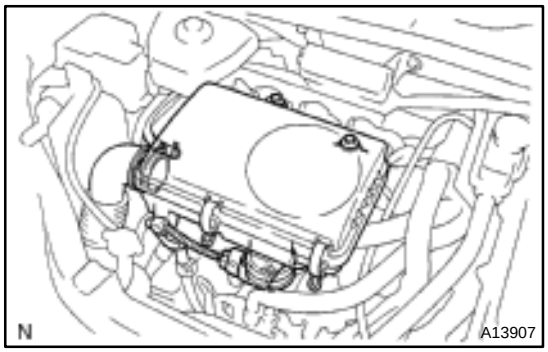

26. INSTALL AIR CLEANER ASSEMBLY

(a) Install the air cleaner assembly with the 2 bolts.
(b) Tighten the 2 hose clamps.
(c) Connect the EVAP hose to the air cleaner case.
(d) Connect the MAF meter connector.

27. INSTALL HEATER UNIT WATER PUMP (See page AC–55)

28. INSTALL CONVERTER AND INVERTER ASSEMBLY (See page HV–22)

29. INSTALL OUTER FR COWL TOP PANEL ASSEMBLY (See page BO–35)

30. FILL WITH ENGINE COOLANT

31. FILL WITH HV COOLANT

32. INSTALL ENGINE UNDER COVERS

33. CONNECT BATTERY NEGATIVE (–) TERMINAL AND HV BATTERY SERVICE PLUG (See page HV–1)

34. ROAD TEST VEHICLE

Check for abnormal noiss, shock slippage, correct shift points and smooth operation.

35. RECHECK ENGINE COOLANT AND HV TRANSAXLE COOLANT

CYLINDER BLOCK

COMPONENTS

EM17B–02

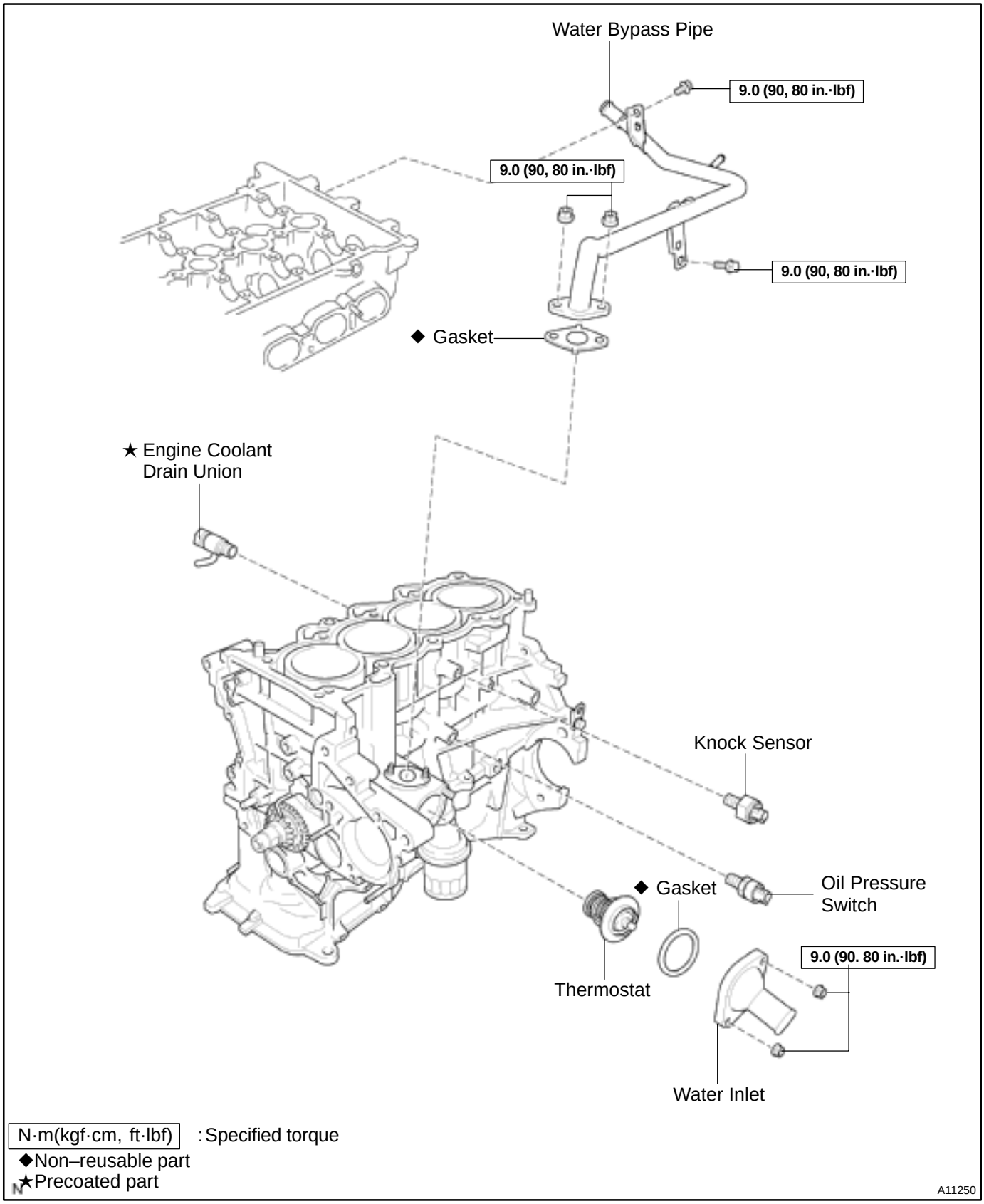

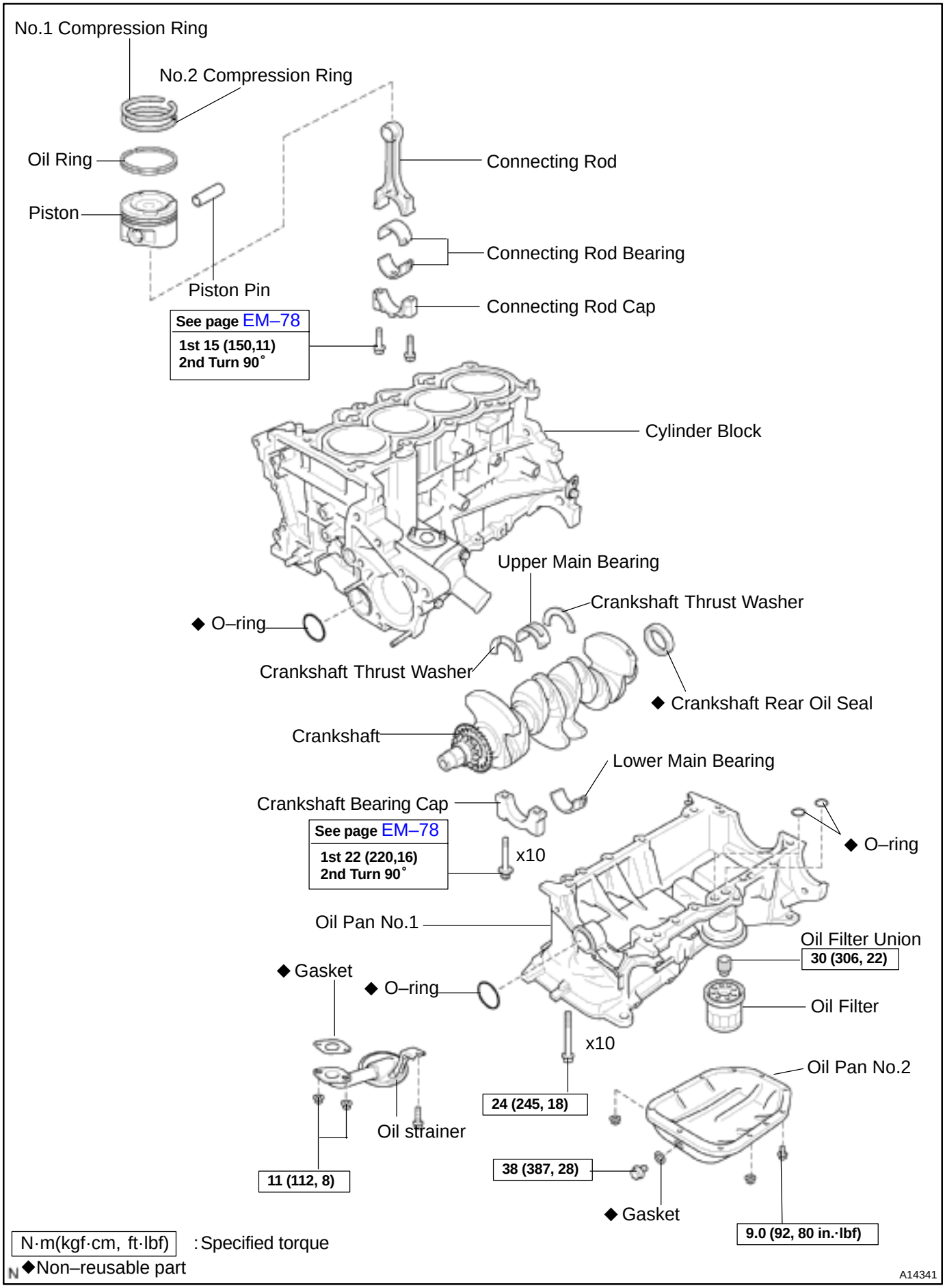
No.1 Compression Ring
No.2 Compression Ring
Oil Ring
Piston
Piston Pin
Connecting Rod
Connecting Rod Bearing
Connecting Rod Cap
See page EM–78
1st 15 (150,11)
2nd Turn 90°
Cylinder Block
Upper Main Bearing
Crankshaft Thrust Washer
◆ O–ring
Crankshaft Thrust Washer
◆ Crankshaft Rear Oil Seal
Crankshaft
Lower Main Bearing
Crankshaft Bearing Cap
See page EM–78
1st 22 (220,16)
2nd Turn 90°
x10
◆ O–ring
Oil Pan No.1
Oil Filter Union
30 (306, 22)
◆ Gasket
◆ O–ring
Oil Filter
x10
Oil Pan No.2
24 (245, 18)
Oil strainer
38 (387, 28)
11 (112, 8)
◆ Gasket
9.0 (92, 80 in.·lbf)
N·m(kgf·cm, ft·lbf) : Specified torque
N ◆Non–reusable part
A14341

EM17C–04

DISASSEMBLY

1. **INSTALL ENGINE TO ENGINE STAND FOR DISASSEMBLY**
2. **REMOVE TIMING CHAIN (See page EM–15)**
3. **REMOVE CYLINDER HEAD (See page EM–29)**
4. **REMOVE ENGINE WIRE**

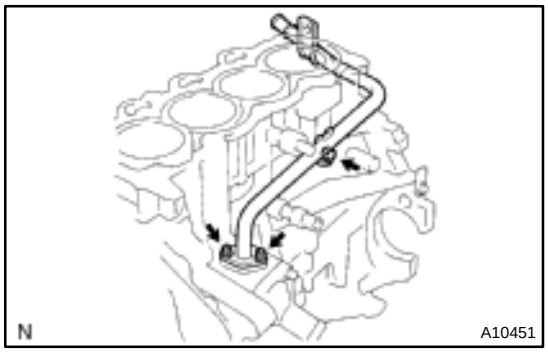

5. **REMOVE WATER BYPASS PIPE**

Remove the 2 nuts, bolt and water bypass pipe.

6. **REMOVE THERMOSTAT (See page CO–10)**
7. **REMOVE KNOCK SENSOR (See page SF–56)**
8. **REMOVE OIL PRESSURE SWITCH (See page LU–1)**
9. **REMOVE ENGINE COOLANT DRAIN UNION**
10. **REMOVE OIL FILTER (See page LU–3)**
11. **REMOVE OIL FILTER UNION**

Using a 12 mm hexagon wrench, remove the oil filter union.

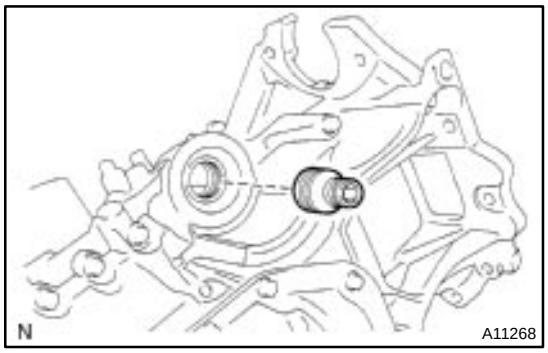

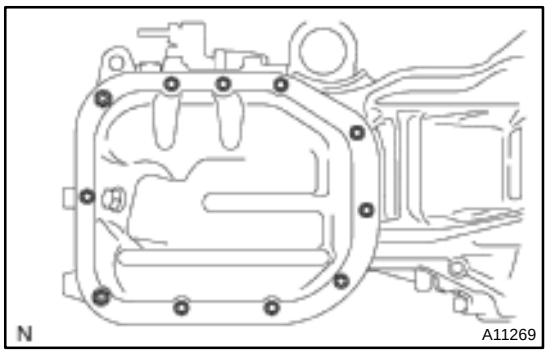

12. **REMOVE OIL PAN NO. 2**

(a) Remove the 9 bolts and 2 nuts.

(b) Insert the blade of SST between the oil pan No. 1 and oil pan No. 2, and cut off applied sealer and remove the oil pan.

SST 09032–00100

NOTICE:

- **Be careful not to the damage the oil pan contact surface of the oil pan No. 1.**
- **Be careful not to damage the oil pan No. 2 flange.**

13. **REMOVE OIL STRAINER**

Remove the bolt and 2 nuts, oil strainer and gasket.

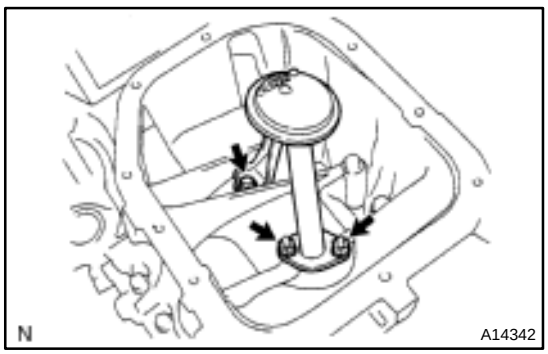

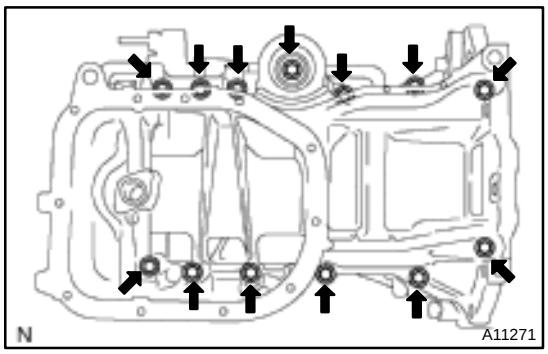

14. REMOVE OIL PAN NO. 1

(a) Uniformly loosen and remove the 13 bolts, in several passes, in the sequence shown.

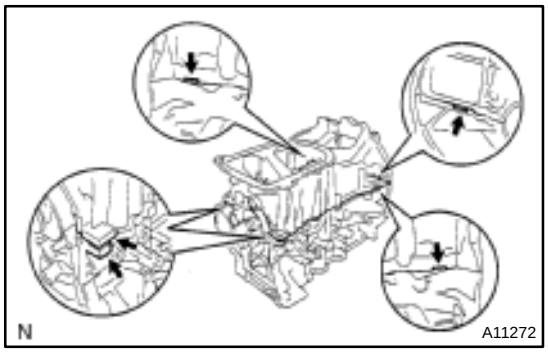

(b) Using screwdriver remove the oil pan No. 1 by prying the portions between the cylinder block and oil pan No. 1.

(c) Remove the 2 O–rings from the cylinder block.

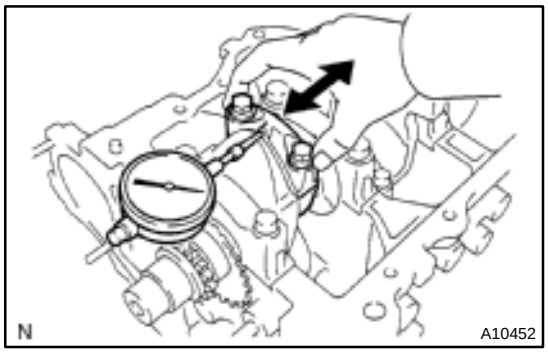

15. CHECK CONNECTING ROD THRUST CLEARANCE

Using a dial indicator, measure the thrust clearance while moving the connecting rod back and forth.

Standard thrust clearance:
0.16 – 0.36 mm (0.0063 – 0.0142 in.)
Maximum thrust clearance:
0.36 mm (0.0142 in.)

If the thrust clearance is greater than maximum, replace the connecting rod assembly(s). If necessary, replace the crankshaft.

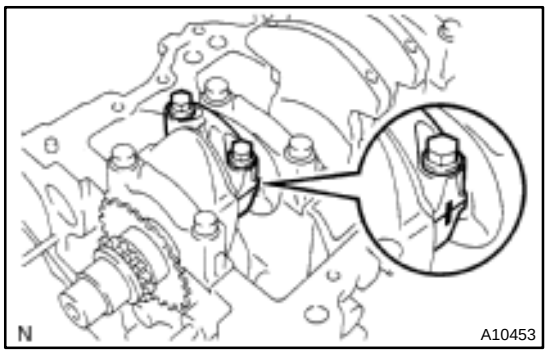

16. REMOVE CONNECTING ROD CAPS AND CHECK OIL CLEARANCE

(a) Check the matchmarks on the connecting rod and cap are aligned to ensure correct reassembly.

(b) Remove the 2 connecting rod cap bolts.

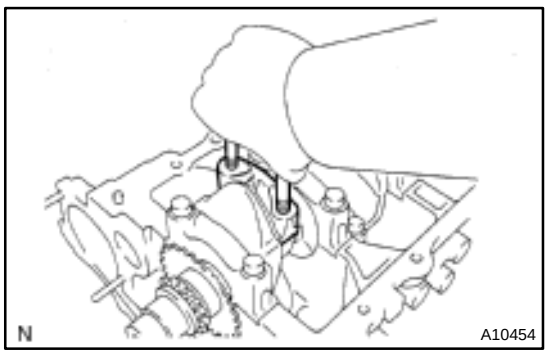

(c) Using the 2 removed connecting rod cap bolts, remove the connecting rod cap and lower bearing by wiggling the connecting rod cap right and left.

HINT:

Keep the lower bearing inserted with the connecting rod cap.

(d) Clean the crank pin and bearing.

(e) Check the crank pin and bearing for pitting and scratches.

If the crank pin or bearing is damaged, replace the bearings.

If necessary, replace the crankshaft.

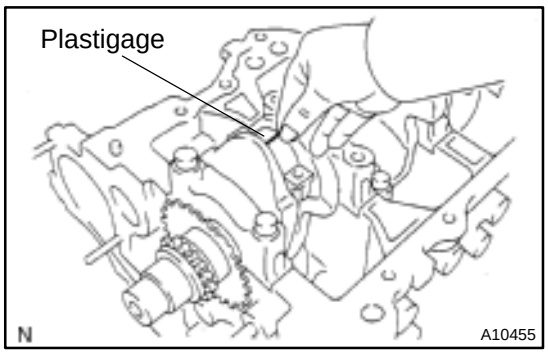

(f) Lay a strip of Plastigage the crank pin.

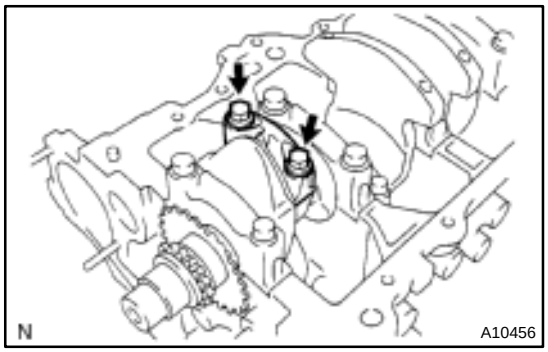

(g) Install the connecting rod cap with the 2 bolts.
(See page EM–78)
Torque:
1ST 15 N·m (150 kgf·cm, 11 ft·lbf)
2ND Turn 90 °

NOTICE:
Do not turn the crankshaft.

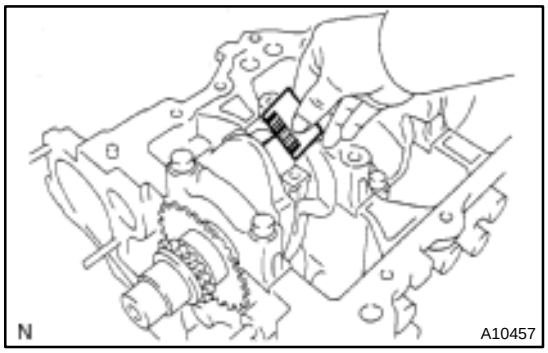

(h) Remove the 2 bolts, connecting rod cap and lower bearing. (See procedure (b) and (c) above)

(i) Measure the Plastigage at its widest point.
Standard oil clearance:
0.016 – 0.040 mm (0.0006 – 0.0016 in.)
Maximum oil clearance:
0.06 mm (0.0024 in.)

If the oil clearance is greater than maximum, replace the bearings. If necessary, grind or replace the crankshaft.

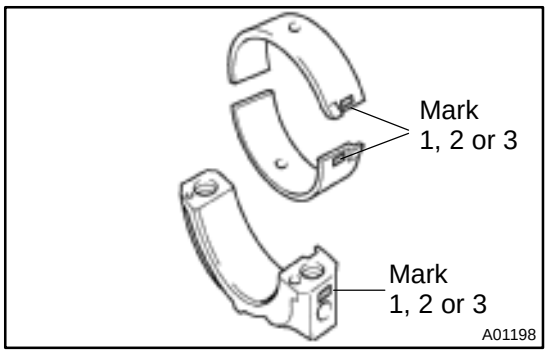

HINT:
If replacing a bearing, replace it with one having the same number as marked on the connecting rod. There are 3 sizes of standard bearings, marked ”1”, ”2” and ”3” accordingly.

Reference
Standard bearing center wall thickness

Mark	mm (in.)
”1”	1.488 – 1.492 (0.0586 – 0.0587)
”2”	1.492 – 1.496 (0.0587 – 0.0589)
”3”	1.496 – 1.500 (0.0589 – 0.0591)

(j) Completely remove the plastigage.

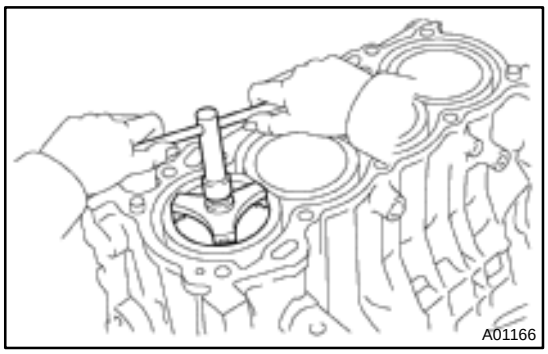

17. REMOVE PISTON AND CONNECTING ROD ASSEMBLIES

(a) Using a ridge reamer, remove all the carbon from the top of the cylinder.

(b) Push the piston, connecting rod assembly and upper bearing through the top of the cylinder block.

HINT:

- Keep the bearings, connecting rod and cap together.
- Arrange the piston and connecting rod assemblies in the correct order.

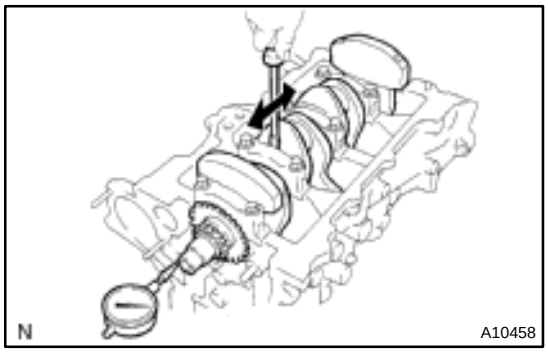

18. CHECK CRANKSHAFT THRUST CLEARANCE

Using a dial indicator, measure the thrust clearance while moving the crankshaft back and forth.

Standard thrust clearance:
0.09 – 0.19 mm (0.0035 – 0.0075 in.)
Maximum thrust clearance:
0.3 mm (0.012 in.)

If the thrust clearance is greater than maximum, replace the thrust washer as a set.

Thrust washer thickness:
2.430 – 2.480 mm (0.09567 – 0.09764 in.)

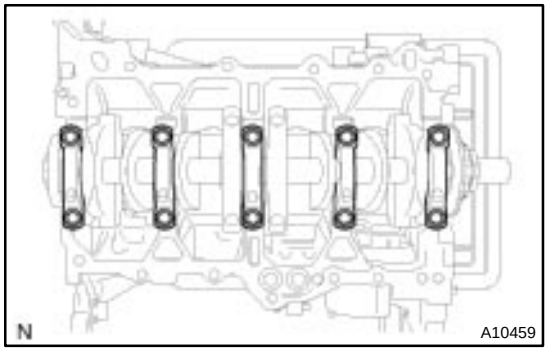

19. REMOVE BEARING CAPS AND CHECK OIL CLEARANCE

(a) Uniformly loosen and remove the 10 bearing cap bolts in several passes in the sequence shown.

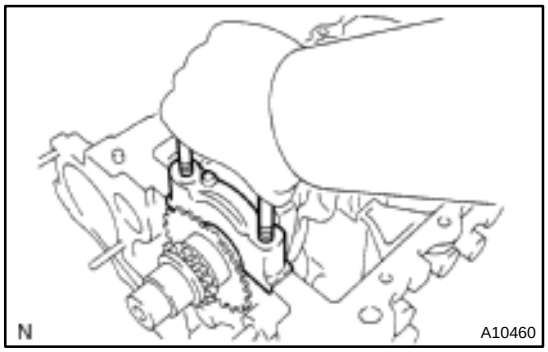

(b) Using the 2 removed bearing cap bolts, remove the bearing cap and lower bearing by wiggling the bearing cap right and left.

HINT:

Keep the lower bearing inserted with the bearing cap.

(c) Lift out the crankshaft.

HINT:

Keep the upper bearings and thrust washers together with the cylinder block.

(d) Clean each main journal and bearing.

(e) Check each main journal and bearing for pitting and scratches.

If the journal or bearing is damaged, replace the bearing.

If necessary, grind or replace the crankshaft.

(f) Place the crankshaft on the cylinder block.

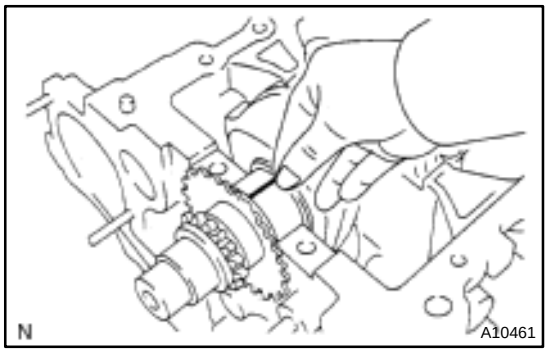

(g) Lay a strip of plastigage acrose each journal.

(h) Install the bearing caps (See page EM–45).

Torque:
1ST 22 N·m (220 kgf·cm, 16 ft·lbf)
2ND Turn 90 °

NOTICE:

Do not turn the crankshaft.

(i) Remove the bearing caps (See procedure (a) and (b) above).

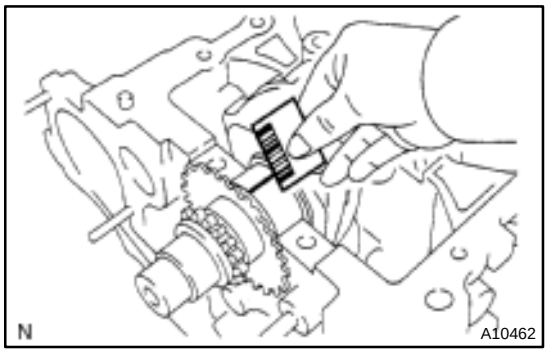

(j) Measure the plastigage at its widest point.

Standard oil clearance:
0.010 – 0.023 mm (0.0004 – 0.0009 in.)
Maximum oil clearance:
0.07 mm (0.0028 in.)

If the oil clearance is greater then maximum, replace the bearings. If necessary, replace the crankshaft.

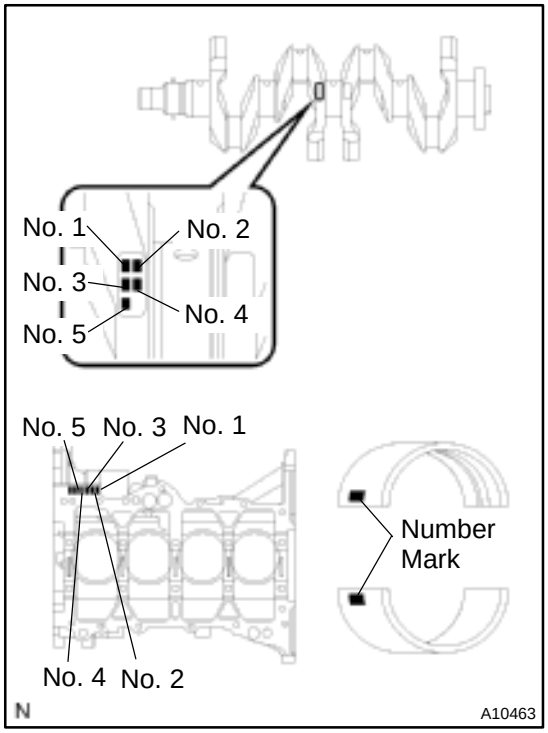

HINT:

If using a standard bearing, replace it with one having the same number. If the number of the bearing cannot be determined, select the correct bearing by adding together the numbers imprinted on the cylinder block and crankshaft, then selecting the bearing with the same number as the total. There are 4 sizes of standard bearings, marked ”1”, ”2”, ”3” and ”4” accordingly.

	Total number			” ”: Number mark
Cylinder block (A) + Crankshaft (B)	0 – 2	3 – 5	6 – 8	9 –11
Use bearing	”1”	”2”	”3”	”4”

EXAMPLE: Cylinder block ”4” (A)
+ Crankshaft ”3” (B)
= Total number 7 (Use bearing ”3”)

Reference

Item	Mark	mm (in.)
Cylinder block main journal bore diameter (A)	”0”	50.000 – 50.003 (1.96850 – 1.96862)
	”1”	50.003 – 50.005 (1.96862 – 1.96870)
	”2”	50.005 – 50.007 (1.96870 – 1.96878)
	”3”	50.007 – 50.010 (1.96878 – 1.96889)
	”4”	50.010 – 50.012 (1.96889 – 1.96897)
	”5”	50.012 – 50.014 (1.96897 – 1.96905)
	”6”	50.014 – 50.016 (1.96905 – 1.96913)
Crankshaft main journal diameter (B)	”0”	46.000 – 46.002 (1.81102 – 1.81110)
	”1”	46.002 – 46.004 (1.81110 – 1.81118)
	”2”	46.004 – 46.006 (1.81118 – 1.81126)
	”3”	46.006 – 46.008 (1.81126 – 1.81133)
	”4”	46.008 – 46.010 (1.81133 – 1.81141)
	”5”	46.010 – 46.012 (1.81141 – 1.81149)
Standard bearing center wall thickness	”1”	1.992 – 1.995 (0.07843 – 0.07854)
	”2”	1.995 – 1.998 (0.07854 – 0.07866)
	”3”	1.998 – 2.001 (0.07866 – 0.07878)
	”4”	2.001 – 2.004 (0.07878 – 0.07890)

(k) Completely remove the Plastigage.

20. REMOVE CRANKSHAFT

(a) Lift out the crankshaft.

(b) Remove the 5 upper main bearings and 2 thrust washers from the cylinder block.

HINT:

Arrange the main bearings and thrust washers in the correct order.

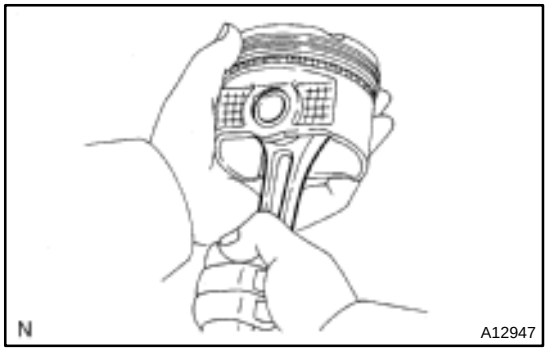

21. CHECK FIT BETWEEN PISTON AND PISTON PIN

Try to move the piston back and forth on the piston pin.

If any movement is felt, replace the piston and pin as a set.

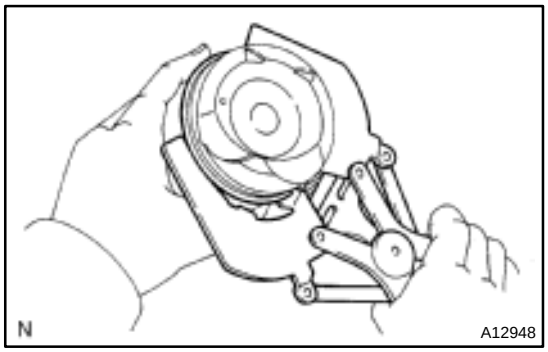

22. REMOVE PISTON RINGS

(a) Using a piston ring expander, remove the 2 compression rings.

(b) Remove the oil ring by hand.

HINT:

Arrange the piston rings in the correct order only.

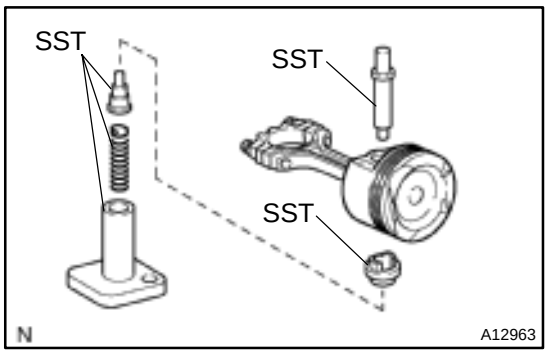

23. DISCONNECT CONNECTING ROD FROM PISTON

Using SST, press out the piston pin from the piston. Remove the piston.

SST 09221–25026 (09221–00021, 09221–00030, 09221–00190, 09221–00141, 09221–00150)

HINT:

- The piston and pin are a matched set.
- Arrange the pistons, pins, rings, connecting rods and bearings in correct order.

EM17D–03

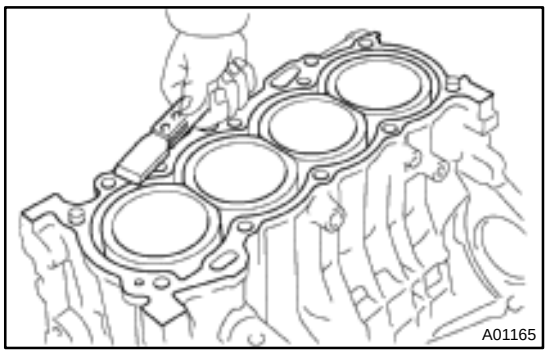

INSPECTION

1. REMOVE GASKET MATERIAL

Using a gasket scraper, remove all the gasket material from the top surface of the cylinder block.

2. CLEAN CYLINDER BLOCK

Using a soft brush and solvent, thoroughly clean the cylinder block.

NOTICE:

If the cylinder is washed at high temperatures, the cylinder liner sticks out beyond the cylinder block, so always wash the cylinder block at a temperature of 45˚C (133˚F) or less.

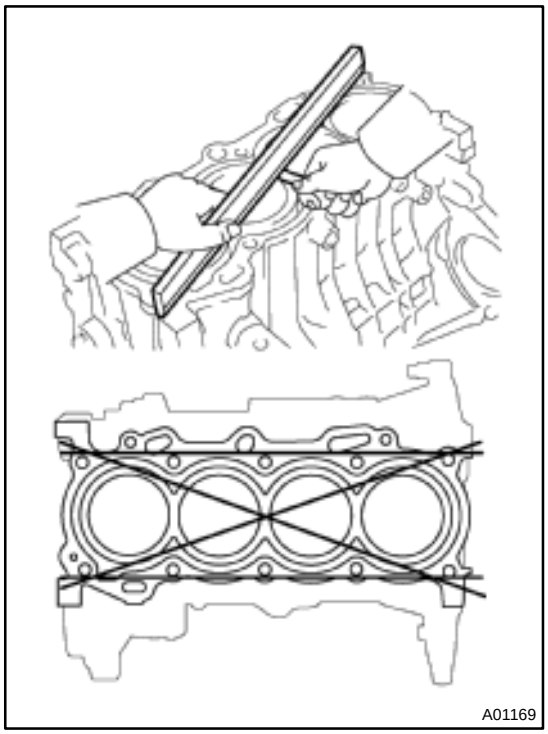

3. INSPECT TOP SURFACE OF CYLINDER BLOCK FOR FLATNESS

Using a precision straight edge and feeler gauge, measure the surface contacting the cylinder head gasket for warpage.

Maximum warpage: 0.05 mm (0.0020 in.)

If warpage is greater than maximum, replace the cylinder block.

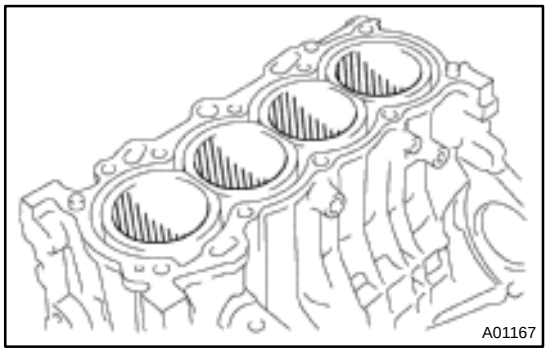

4. INSPECT CYLINDER BORE DIAMETER

Visually check the cylinder for vertical scratches.

If deep scratches are present, replace the cylinder block.

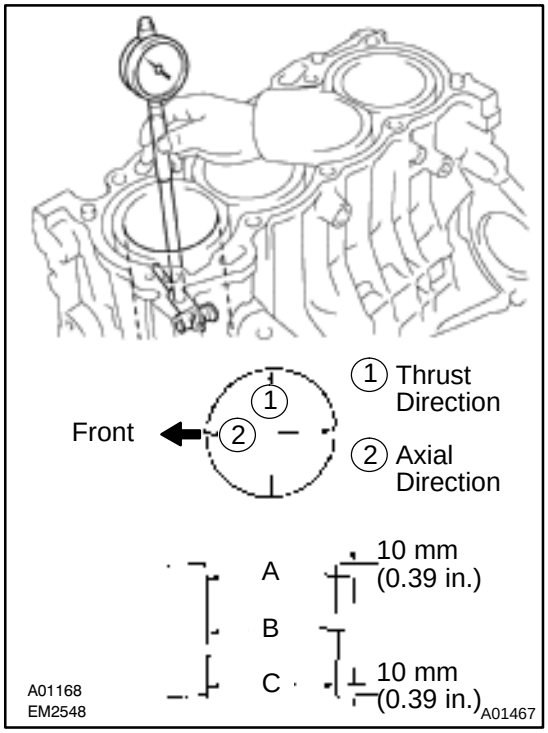

5. INSPECT CYLINDER BORE DIAMETER

Using a cylinder gauge, measure the cylinder bore diameter at positions A, B and C in the thrust and axial directions.

Standard diameter:
75.000 – 75.013 mm (2.95275 – 2.95326 in.)
Maximum diameter:
75.013 mm (2.95326 in.)

If the diameter is greater than maximum, replace the cylinder block.

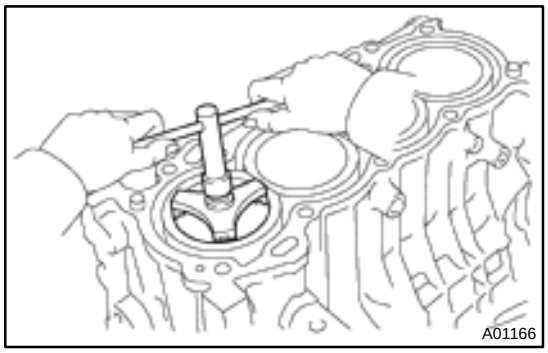

6. REMOVE CYLINDER RIDGE

If the wear is less than 0.2 mm (0.008 in,), using a ridge reamer, grind the top of the cylinder.

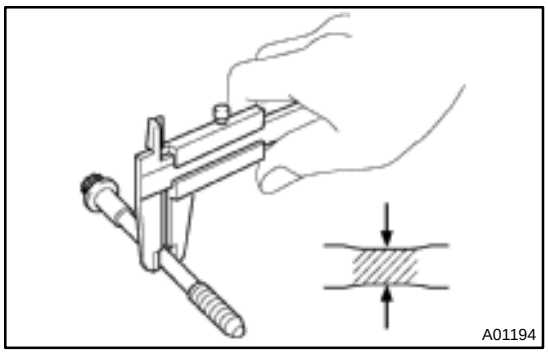

7. INSPECT 12 POINTED HEAD BEARING CAP SUB–ASSEMBLY BOLTS

Using vernier calipers, measure the tension portion diameter of the bolt.

Standard diameter: 7.3 – 7.5 mm (0.287 – 0.295 in.)
Minimum diameter: 7.3 mm (0.287 in.)

If the diameter is less than minimum, replace the bolt.

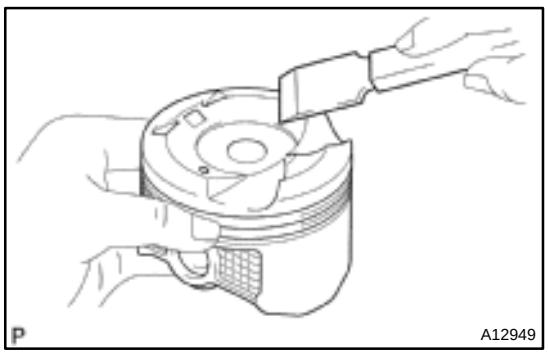

8. CLEAN PISTON

(a) Using a gasket scraper, remove the carbon from the piston top.

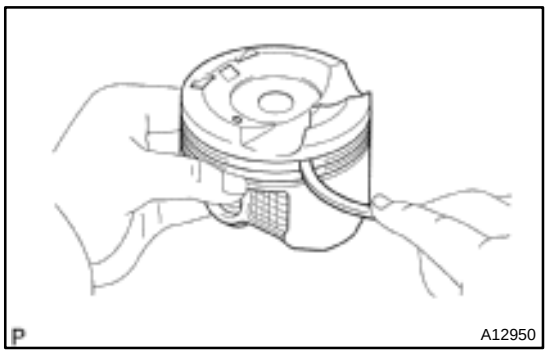

(b) Using a groove cleaning tool or broken ring, clean the piston ring grooves.

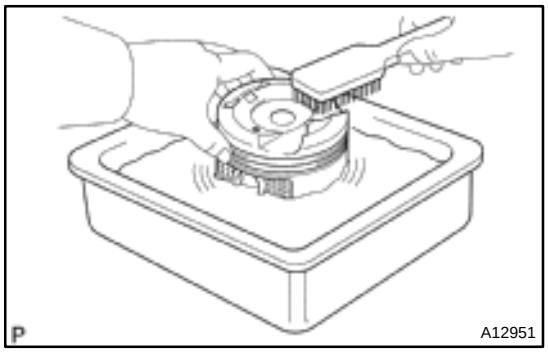

(c) Using solvent and a brush, thoroughly clean the piston.

NOTICE:

Do not use a wire brush.

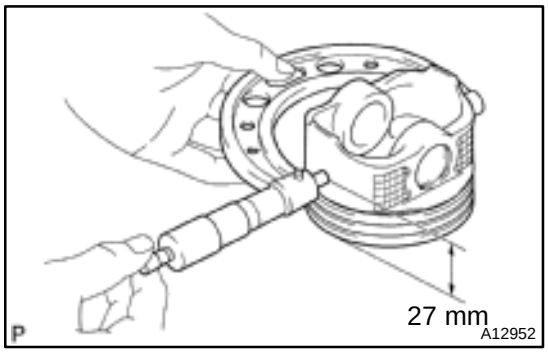

9. INSPECT PISTON OIL CLEARANCE

(a) Using a micrometer, while placing the piston up side down, take measurement at the position of 27 mm (1.06 in.).

Piston diameter:

74.930 – 74.940 mm (2.94999 – 2.95039 in.)

(b) Measure the cylinder bore diameter in the thrust directions. (See procedure in step 5)

(c) Subtract the piston diameter measurement from the cylinder bore diameter measurement.

Standard oil clearance:

0.045 – 0.068 mm (0.00177 – 0.00268 in.)

Maximum oil clearance:

0.095 mm (0.0037 in.)

If the oil clearance is greater than maximum, replace all the 4 pistons. If necessary, replace the cylinder block.

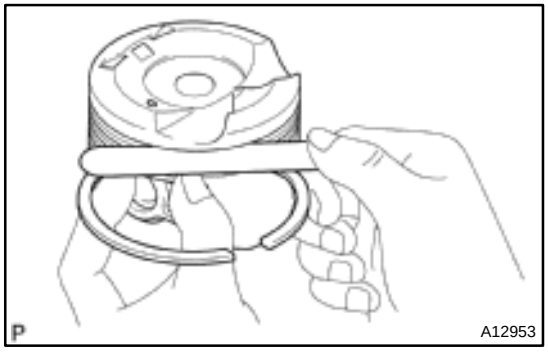

10. INSPECT PISTON RING END GAP

Using a feeler gauge, measure the clearance between new piston ring and the wall of the ring groove.

Ring groove clearance:

0.030 – 0.070 mm (0.0012 – 0.0028 in.)

If the clearance is not as specified, replace the piston.

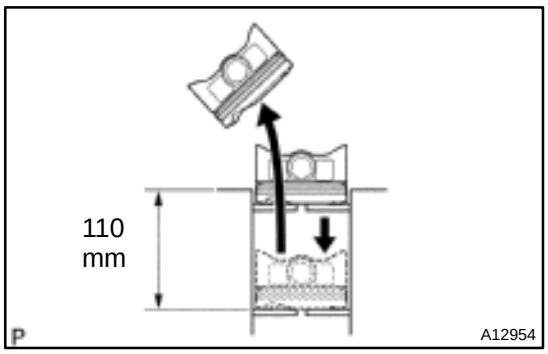

11. INSPECT PISTON RING END GAP

(a) Insert the piston ring into the cylinder bore.

(b) Using a piston, push the piston ring a little beyond the bottom of the ring travel, 110 mm (4.33 in.) from the top of the cylinder block.

(c) Using a feeler gauge, measure the end gap.

Standard end gap:
No. 1 0.22 – 0.32 mm (0.0087 – 0.0126 in.)
No. 2 0.32 – 0.47 mm (0.0126 – 0.0185 in.)
Oil (Side rail) 0.15 – 0.45 mm (0.0059 – 0.0177 in.)
Maximum end gap:
No. 1 0.88 mm (0.0346 in.)
No. 2 1.03 mm (0.0406 in.)
Oil 0.92 mm (0.0362 in.)

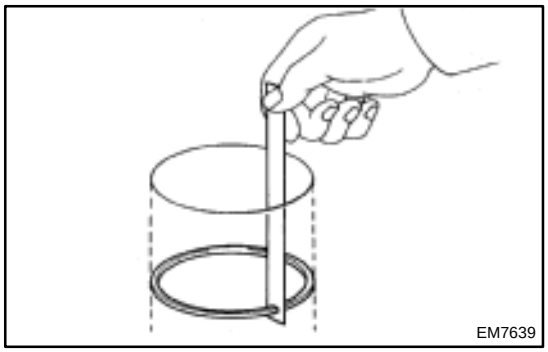

If the end gap is greater than maximum, replace the piston ring.
If the end gap is greater than maximum, even with a new piston ring, replace the cylinder block.

12. INSPECT CONNECTING ROD ALIGNMENT

Using a rod aligner and feeler gauge, check the connecting rod alignment.

- Check for out–of–alignment

Maximum out–of alignment:
0.05 mm (0.0020 in.) per 100 mm (3.94 in.)

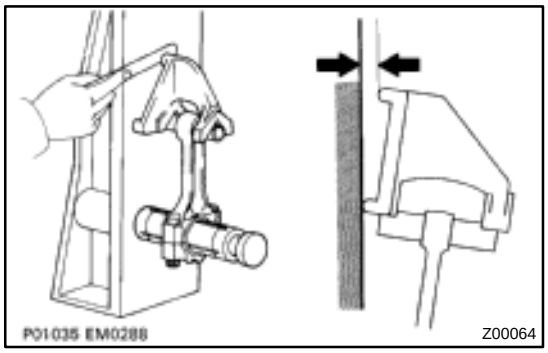

If out–of alignment is greater than maximum, replace the connecting rod assembly.

- Check for twist

Maximum twist:
0.05 mm (0.0020 in.) per 100 mm (3.94 in.)

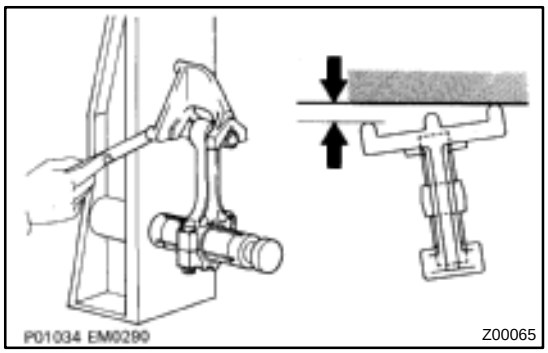

If twist is greater than maximum, replace the connecting rod assembly.

13. INSPECT PISTON PIN OIL CLEARANCE

(a) Using a caliper gauge, measure the inside diameter of the connecting rod bushing.

Bushing inside diameter:
18.010 – 18.019 mm (0.7091 – 0.7094 in.)

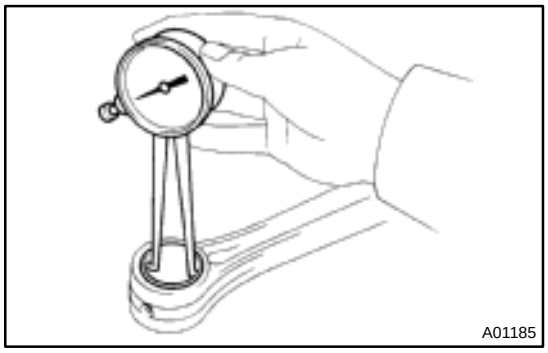

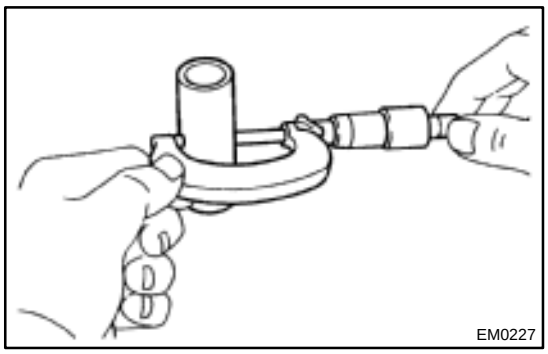

(b) Using a micrometer, measure the piston pin diameter.
Piston pin diameter:
17.988 – 18.007 mm (0.7086 – 0.7089 in.)

(c) Subtract the piston pin diameter measurement from the bushing inside diameter measurement.
Standard oil clearance:
0.009 – 0.015 mm (0.0003 – 0.0006 in.)
Maximum oil clearance:
0.05 mm (0.0020 in.)

If the oil clearance is greater than maximum, replace the connecting rod. If necessary, replace the piston and piston pin as a set.

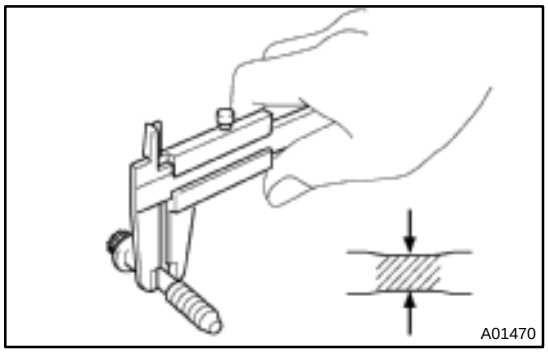

14. INSPECT CONNECTING ROD BOLTS

Using a vernier calipers, measure the tension portion diameter of the bolt.

Standard diameter: 6.6 – 6.7 mm (0.260 – 0.264 in.)
Minimum diameter: 6.4 mm (0.252 in.)

If the diameter is less than minimum, replace the bolt.

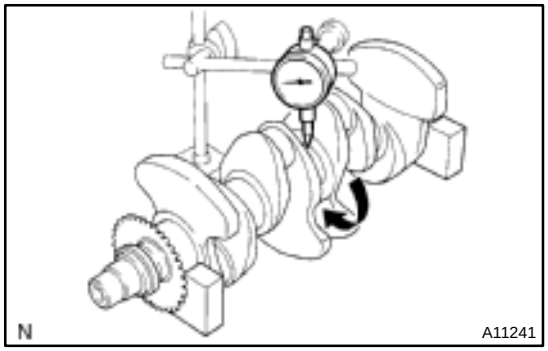

15. INSPECT CRANKSHAFT FOR CIRCLE RUNOUT

(a) Place the crankshaft on V–blocks.

(b) Using a dial indicator, measure the circle runout, as shown in the illustration.
Maximum circle runout: 0.03 mm (0.0012 in.)

If the circle runout is greater than maximum, replace the crankshaft.

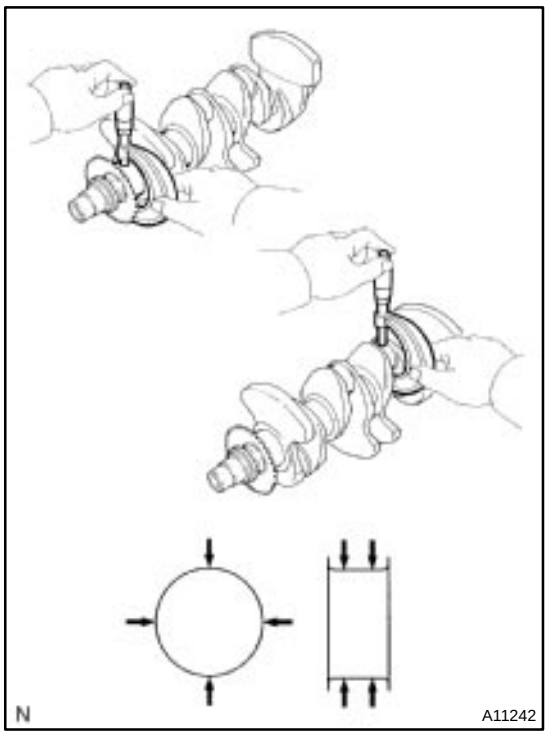

16. INSPECT MAIN JOURNALS AND CRANK PINS

(a) Using a micrometer, measure the diameter of each main journal and crank pin.

Main journal diameter:
45.988 – 46.000 mm (1.81054 – 1.81102 in.)
Crank pin diameter:
39.992 – 40.000 mm (1.5745 – 1.5748 in.)

If the diameter is not as specified, check the oil clearance.
(See page EM–64)
If necessary, replace the crankshaft.

(b) Check each main journal and crank pin for taper and out–of–round as shown.

Maximum taper and out–of–round:
0.02 mm (0.0008 in.)

If the taper and out–of round is greater than maximum, replace the crankshaft.

EM1J4–02

REASSEMBLY

HINT:

- Thoroughly clean all parts to be assembled.
- Before installing the parts, apply fresh engine oil to all sliding and rotating surfaces.
- Replace all gaskets, O–rings and oil seals with new parts.

1. ASSEMBLE PISTON AND CONNECTING ROD

(a) Gradually heat the piston side of connecting rod to 80 – 90˚C (176 – 194˚F).

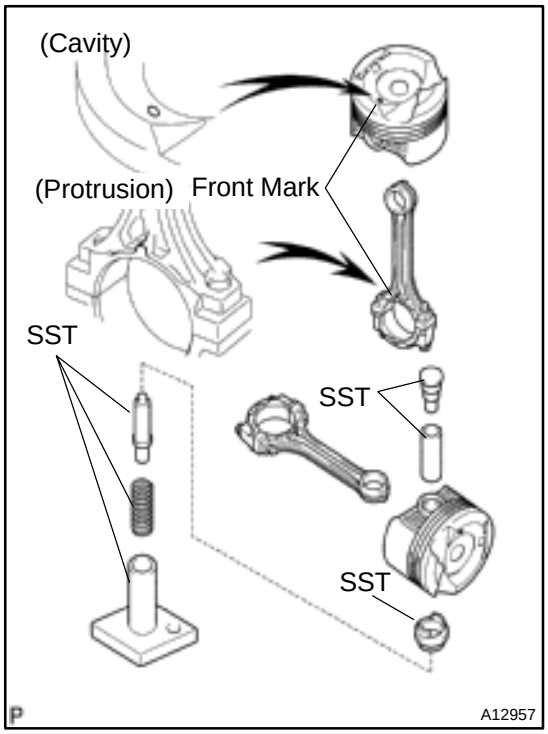

(b) Coat the piston pin and pin holes of the piston with engine oil.

(c) Align the cavity on the piston with the protrusion on the connecting rod.

(d) Using SST, press in the piston pin.
SST 09221–25026 (09221–00021, 09221–00030, 09221–00190, 09221–00141, 09221–00150)

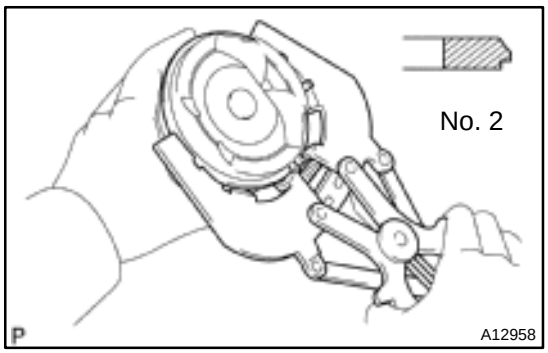

2. INSTALL PISTON RINGS

(a) Install the oil ring expander and 2 side rails by hand.

(b) Using a piston ring expander, install the 2 compression rings.

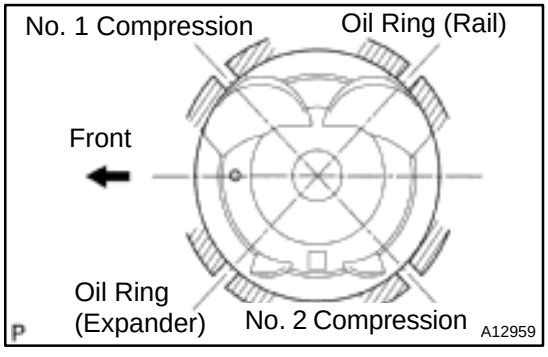

(c) Position the piston rings so that the ring ends are as shown.

NOTICE:
Do not align the ring ends.

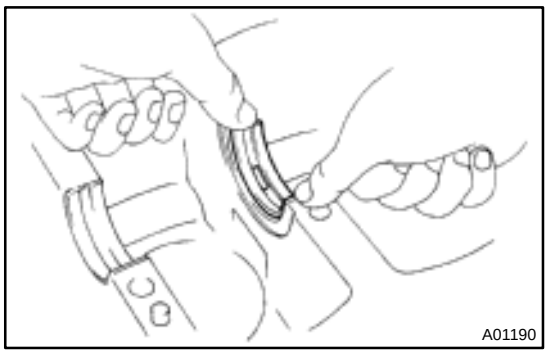

3. Supply parts:
INSTALL MAIN BEARINGS

HINT:

Upper bearings have an oil groove and oil holes; Lower bearings do not.

(a) Align the bearing claw with the claw groove of the cylinder block, and push in the 5 upper bearings.

NOTICE:

Install the bearing with the oil hole in the cylinder block.

(b) Align the bearing claw with the claw grove of the main bearing cap, and push in the 5 lower bearings.

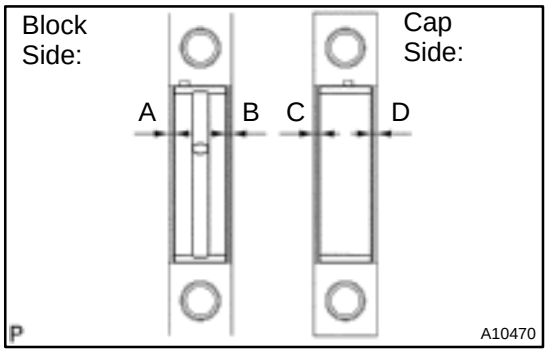

4. Manufacture parts:
INSTALL MAIN BEARINGS

HINT:

Upper bearings have an oil groove and oil holes; Lower bearings do not.

Measure the clearance on both sides of the bearing and install it so that the difference between measured values will be within the specified bellow.

Specified clearance:
A – B = 0.8 mm (0.032 in.)
C – D = 0.4 mm (0.016 in.)

5. PLACE CRANKSHAFT ON CYLINDER BLOCK

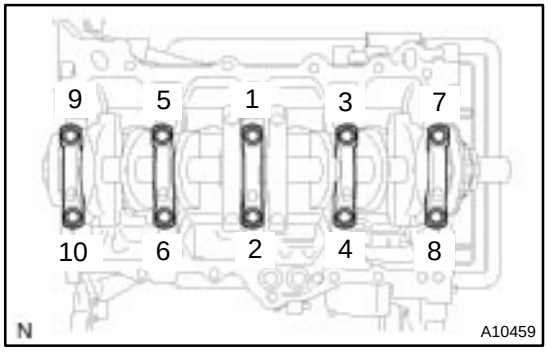

6. INSTALL BEARING CAPS

(a) Install the 5 bearing caps.

HINT:

Each bearing cap has a number and front mark.

(b) Apply a light coat of engine oil on the threads and under the head of the bearing cap bolts.

(c) Install and uniformly tighten the 10 bolts of the bearing cap is several passes, in the sequence shown.
Torque:
1ST 22 N·m (220 kgf·cm, 16 ft·lbf)
2ND Turn 90 °

(d) Check that the crankshaft turns smoothly.

7. CHECK CRANKSHAFT THRUST CLEARANCE
(See page EM–64)

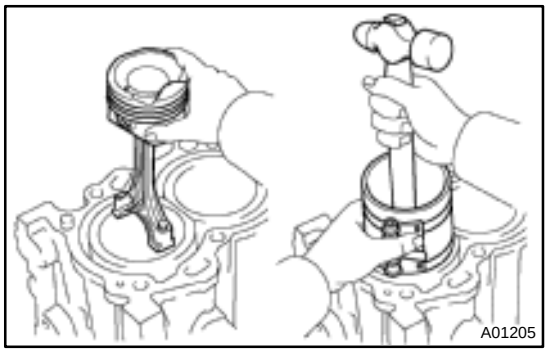

8. INSTALL PISTON AND CONNECTING ROD ASSEMBLES

Using a piston ring compressor, push the correctly numbered piston and connecting rod assemblies into each cylinder with the front mark of the piston facing forward.

9. PLACE CONNECTING ROD CAP ON CONNECTING ROD

(a) Match the numbered connecting rod cap with the connecting rod.

(b) Align the pin dowels of the connecting rod cap with the pins of the connecting rod, and install the connecting rod.

(c) Check that the protrusion of the connecting rod cap is facing in the correct direction.

10. INSTALL CONNECTING ROD CAP BOLTS

HINT:

- The connecting rod cap bolts are tightened in 2 progressive steps (steps (b) and (d)).
- If any of the connecting rod cap bolts is broken or deformed, replace it.

(a) Apply a light coat of engine oil on the threads and under the heads of the connecting rod cap bolts.

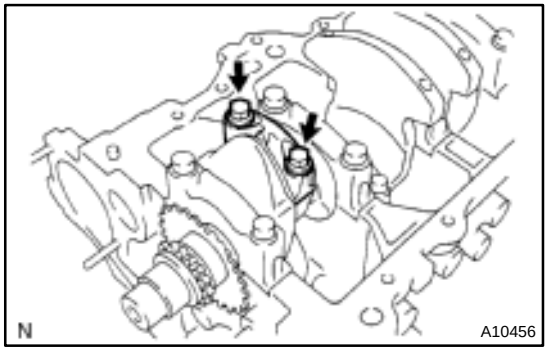

(b) Install and alternately tighten the 2 connecting rod cap bolts in several passes.
Torque:
1ST 15 N·m (150 kgf·cm, 11 ft·lbf)
2ND Turn 90 °

If any of the connecting rod cap bolts does not meet the torque specification, replace the connecting rod cap bolts.

11. CHECK CONNECTING ROD THRUST CLEARANCE
(See page EM–64)

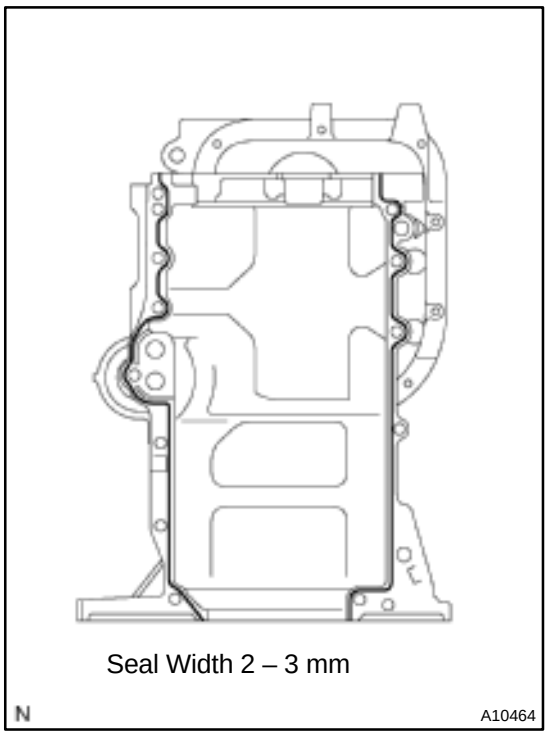

12. INSTALL OIL PAN NO. 1

(a) Remove any old packing (FIPG) material and be careful not to drop any oil on the contact surface of the oil pan No. 1 and cylinder block.
- Using a razor blade and gasket scraper, remove all the old packing (FIPG) material from the gasket surfaces and sealing grooves.
- Thoroughly clean all components to remove all the loose material.
- Using a non–residue solvent, clean both sealing surfaces.

(b) Apply seal packing to the oil pan No. 1 as shown in the illustration.

Seal packing:

Part No. 08826–00080 or equivalent
- Install a nozzle that has been cut to a 2 – 3 mm (0.08 – 0.12 in.) opening.

HINT:

Avoid applying an excessive amount to the surface.
- Parts must be assembled within 3 minutes of application. Otherwise the material must be remove d and reapplied.
- Immediately remove nozzle from the tube and reinstall cap.

(c) Install new O–rings to the cylinder block.

(d) Using a plastic–faced hammer, lightly tap the oil pan No. 1 to ensure a proper fit.

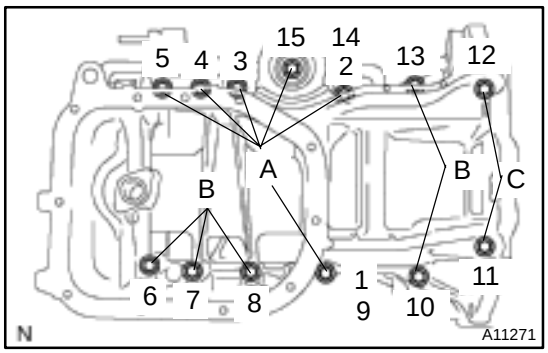

(e) Install and uniformly tighten the 13 bolts, in several passes, in the sequence shown.

Torque: 24 N·m (245 kgf·cm, 18 ft·lbf)

HINT:

Each bolt length in indicated in the illustration.

A: 49 mm (1.929 in.)

B: 88 mm (3.465 in.)

C: 144 mm (5.669 in.)

13. INSTALL REAR CRANKSHAFT OIL SEAL

(See page EM–77)

HINT:

Wipe seal packing away from the contact surface of the cylinder block assembly and oil seal.

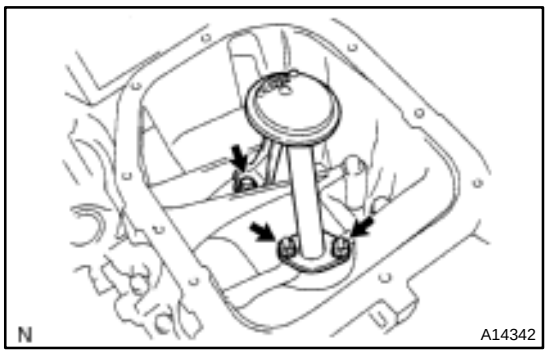

14. INSTALL OIL STRAINER

Install a new gasket, and oil strainer with the bolt and 2 nuts.

Torque: 11 N·m (112 kgf·cm, 8 ft·lbf)

15. INSTALL OIL PAN

(a) Remove any old packing (FIPG) material and be careful not to drop any oil on the contact surface of the main bearing cap and oil pan.

- Using a razor blade and gasket scraper, remove all the old packing (FIPG) material from the gasket surfaces and sealing grooves.
- Thoroughly clean all components to remove all the loose material.
- Using a non–residue solvent, clean both sealing surfaces.

NOTICE:

Do not use a solvent which will affect the painted surfaces.

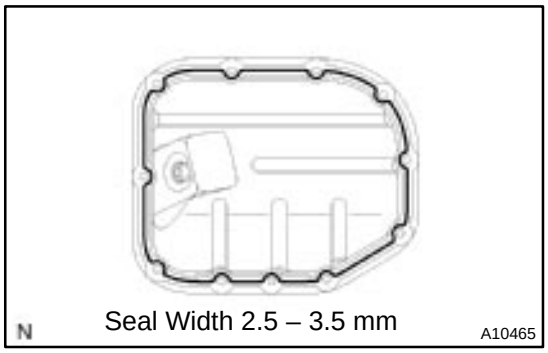

(b) Apply seal packing to the oil pan as shown in the illustration.

Seal packing:

Part No. 08826–00080 or equivalent

- Install a nozzle that has been cut to a 2.5 – 3.5 mm (0.098 – 0.138 in.) opening.

HINT:

Avoid applying an excessive amount to the surface.

- Parts must be assembled within 3 minutes of application. Otherwise the material must be remove d and reapplied.
- Immediately remove nozzle from the tube and reinstall cap.

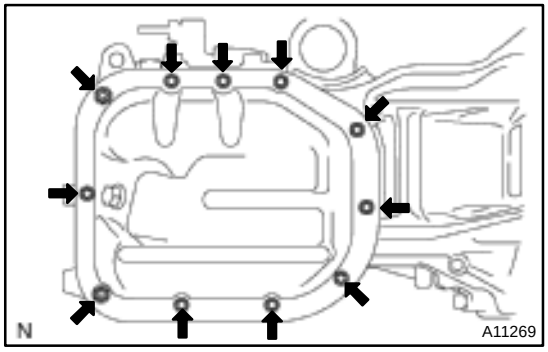

(c) Install the oil pan with the 9 bolts and 2 nuts. Uniformly tighten the bolts and nuts in several passes.

Torque: 9.0 N·m (92 kgf·cm, 80 in.·lbf)

16. INSTALL OIL FILTER UNION

Torque: 30 N·m (306 kgf·cm, 21 ft·lbf)

17. INSTALL OIL FILTER

(See page LU–3)

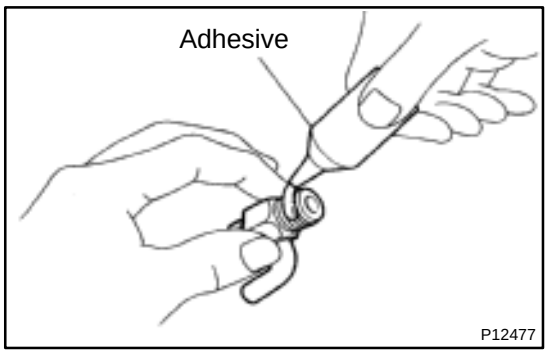

18. INSTALL ENGINE COOLANT DRAIN UNION

(a) Apply adhesive to 2 or 3 threads.
Adhesive:
Part No. 08833–00080, THREE BOND 1344, LOCTITE 242 or equivalent

(b) Install the drain union.
Torque: 35 N·m (350 kgf·cm, 25 ft·lbf)

HINT:
After applying the specified torque, rotate the drain union clockwise until its drain port is facing downward.

19. INSTALL KNOCK SENSOR
Torque: 39 N·m (400 kgf·cm, 29 ft·lbf)

20. INSTALL OIL PRESSURE SWITCH
(See page LU–1)

21. INSTALL THERMOSTAT
(See page CO–12)

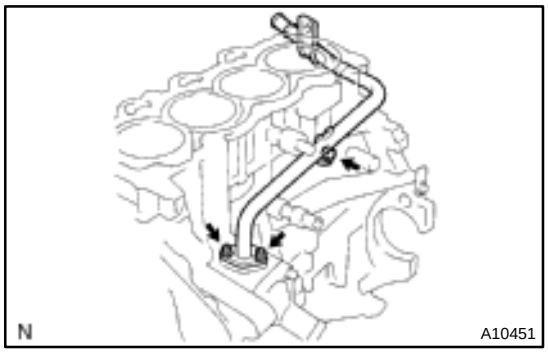

22. INSTALL WATER BYPASS PIPE
Torque: 9.0 N·m (92 kgf·cm, 80 in.·lbf)

23. INSTALL ENGINE WIRE

24. INSTALL CYLINDER HEAD
(See page EM–45)

25. INSTALL TIMING SPROCKETS AND TIMING CHAIN
(See page EM–21)

26. REMOVE ENGINE STAND

EC0HT–01

DRAWING

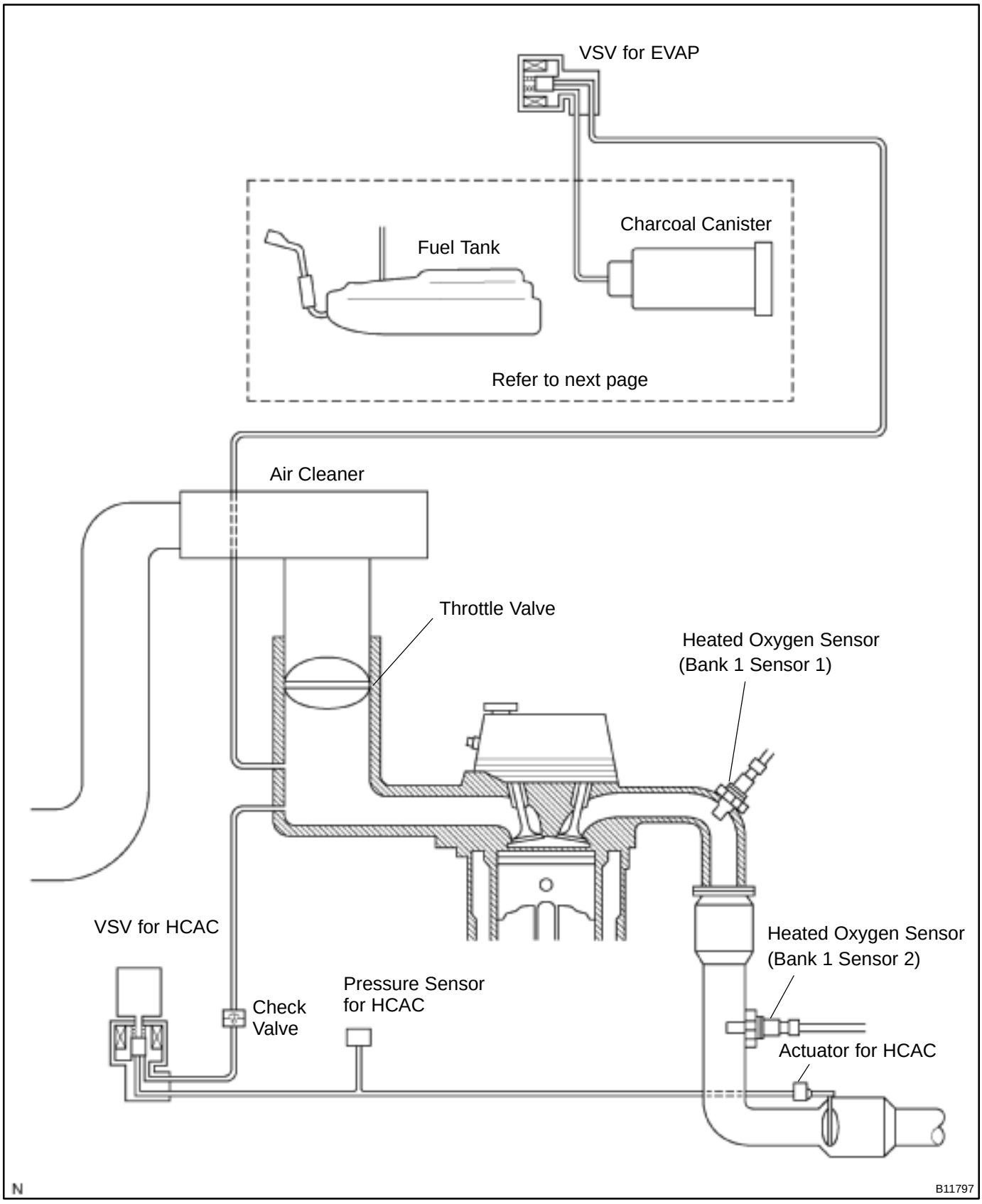

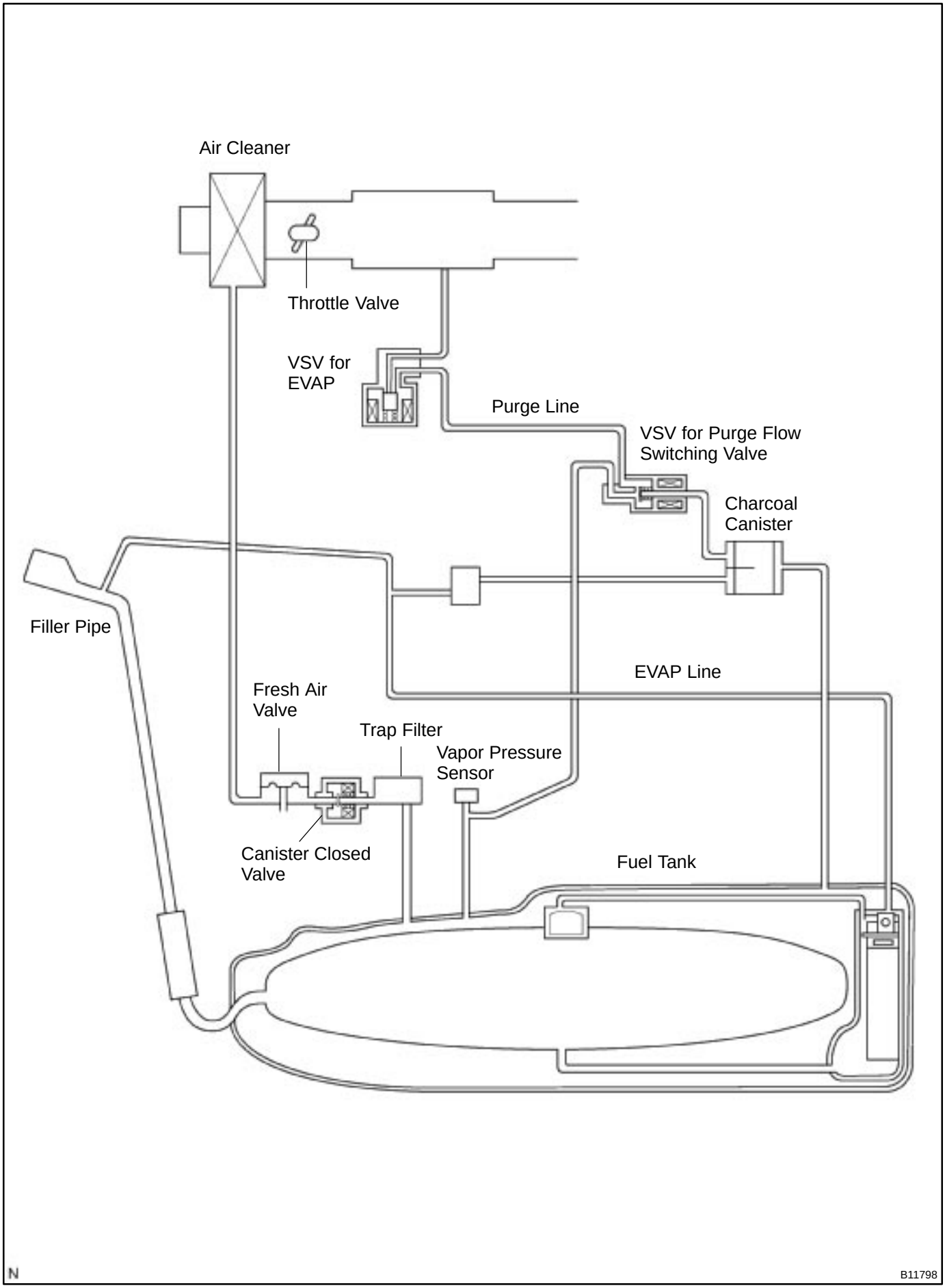
Air Cleaner
Throttle Valve
VSV for EVAP
Purge Line
VSV for Purge Flow Switching Valve
Charcoal Canister
Filler Pipe
EVAP Line
Fresh Air Valve
Trap Filter
Vapor Pressure Sensor
Canister Closed Valve
Fuel Tank
N
B11798

EC0HV–01

INSPECTION

1. REMOVE EXHAUST TAIL PIPE AND HEATED INSULATOR (See page EM–84)

2. INSPECT LINES AND CONNECTORS

Visually check for loose connections, sharp bends or damage.

3. INSPECT FUEL TANK FILLER PIPE

Visually check for deformation, cracks or fuel leakage.

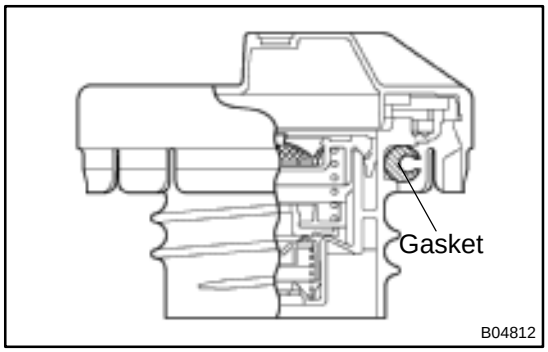

4. INSPECT FUEL TANK CAP

Visually check if the cap and/or gasket are deformed or damaged.

If necessary, repair or replace the cap.

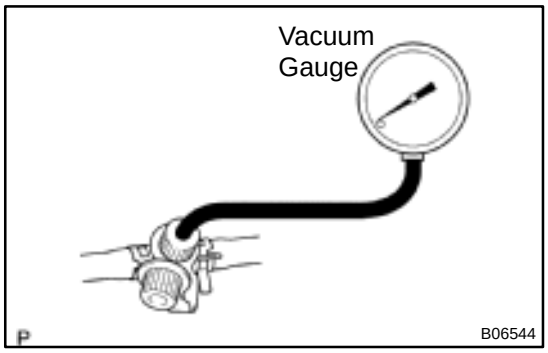

5. INSPECT EVAP SYSTEM LINE

(a) Warm up the engine and stop the engine.
Allow the engine to warm up to normal operating temperature.

(b) Install a vacuum gauge (EVAP control system test equipment vacuum gauge) to the EVAP service port on the purge line.

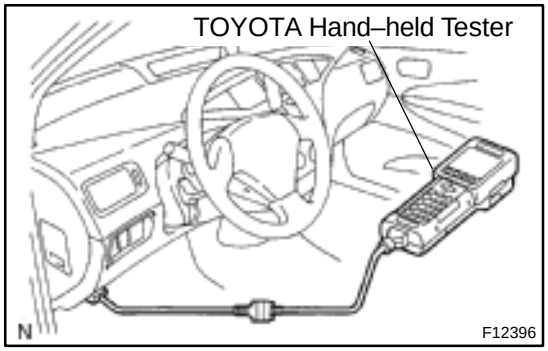

(c) TOYOTA hand–held tester:
Forced driving of the VSV for the EVAP.
(1) Connect a TOYOTA hand–held tester to the DLC3.
(2) Start the engine.
(3) Push the TOYOTA hand–held tester main switch ON.
(4) Use the ACTIVE TEST mode on the TOYOTA hand–held tester to operate the VSV for the EVAP.

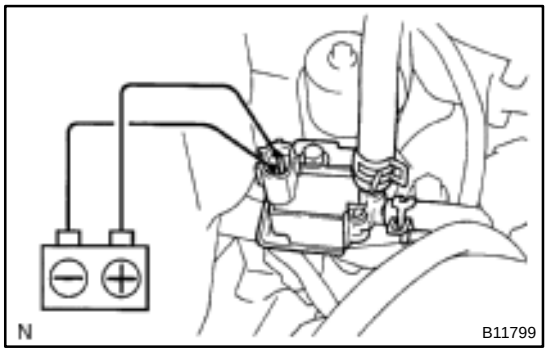

(d) If you have no TOYOTA hand–held tester:
Forced driving of the VSV for the EVAP.
(1) Disconnect the VSV connector for the EVAP.
(2) Connect the positive (+) and negative (–) leads from the battery to the VSV terminals for the EVAP.
(3) Start the engine.

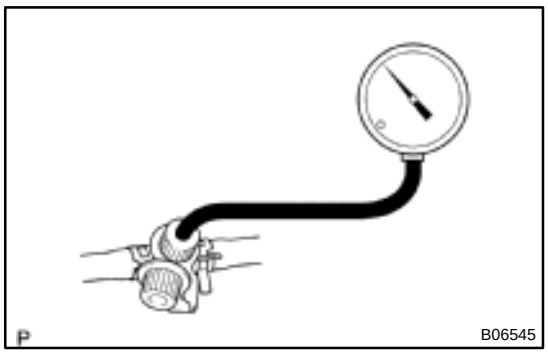

(e) Check the vacuum at idle.
Vacuum:
Maintain at 0.368 – 19.713 in. Hg (5 – 268 in.Aq) for over 5 seconds

HINT:
If the vacuum does not change, you can conclude that the hose connecting the VSV to the service port has come loose or is blocked, or the VSV is malfunctioning.

(f) If you have TOYOTA hand–held tester:
Conclude forced driving of the VSV for the EVAP.
(1) Stop the engine.
(2) Disconnect the TOYOTA hand–held tester from the DLC3.

(g) If you have no TOYOTA hand–held tester:
Conclude forced driving of the VSV for the EVAP.
(1) Stop the engine.
(2) Disconnect the positive (+) and negative (–) leads from the battery, and from the VSV terminals for the EVAP.
(3) Connect the VSV connector for the EVAP.

(h) Disconnect the vacuum gauge from the EVAP service port on the purge line.

(i) Connect a pressure gauge to the EVAP service port on the purge line.

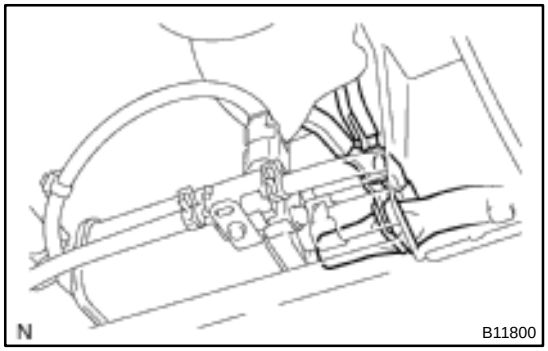

(j) Check the pressure.
(1) Close off the air drain hose at the marked position of the canister with a hose clipper or similar instrument.

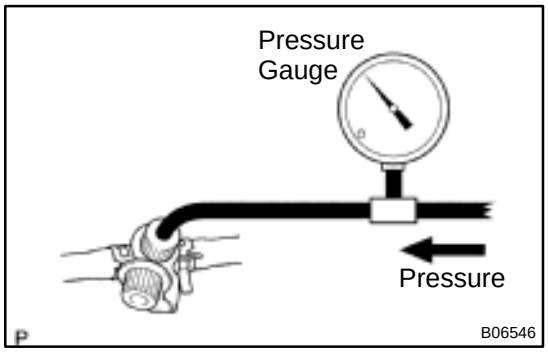

(2) Add the pressure (13.5 – 15.5 in.Aq) from the EVAP service port.
Pressure:
2 minutes after the pressure is added, the gauge should be over 7.7 – 8.8 in.Aq.

HINT:
If you can’t add pressure, you can conclude that the hose connecting the VSV–canister–fuel tank has slipped off or the VSV is open.

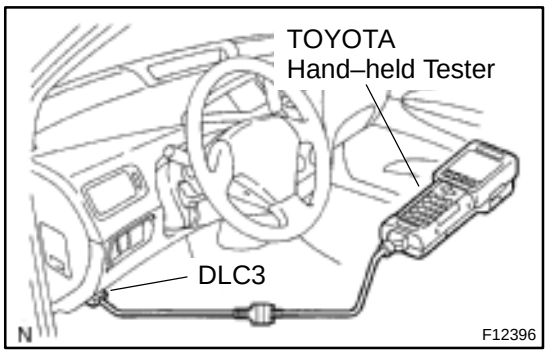

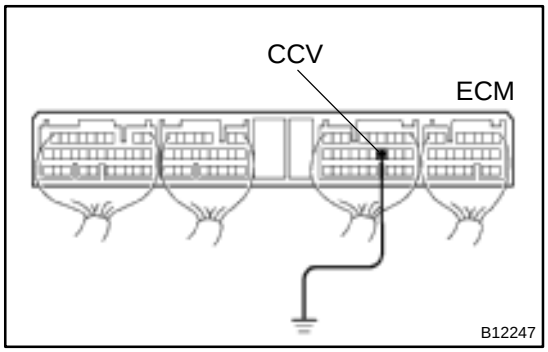

6. CHECK AIRTIGHTNESS IN FUEL TANK AND FILLER PIPE

(a) TOYOTA hand–held tester:
Forced driving of the VSV for the canister closed valve (CCV).
(1) Connect a TOYOTA hand–held tester to the DLC3.
(2) Turn the ignition switch ON.
(3) Push the TOYOTA hand–held tester mode on the TOYOTA hand–held tester to operate the VSV for the canister closed valve (CCV).

(b) If you have no TOYOTA hand–held tester:
Forced driving of the canister closed valve (CCV).
(1) Remove the connector cover from the ECM.
(2) Turn the ignition switch ON.
(3) Connect the between terminal CCV of the ECM connector and body ground.

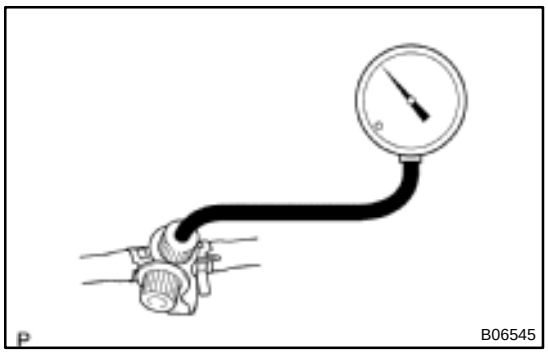

(c) Add the pressure from the EVAP service port to 1.6 kPa (16.3 kgf/cm^2, 0.232 psi).
(d) Check that the pressure can be held for 30 seconds.
(e) Visually check the fuel tank and filler pipes.
(f) Check each connection of hoses and pipes.

If there is abnormality, replace the fuel tank and filler pipe.

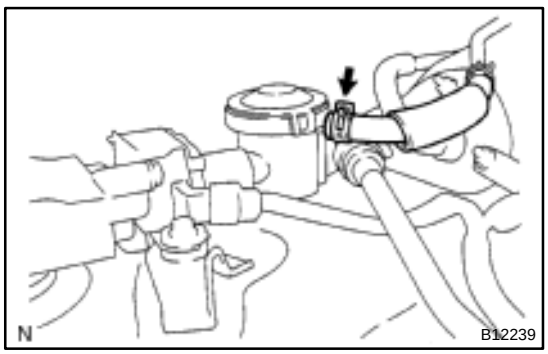

7. CHECK AIR INLET LINE

(a) Disconnect the air inlet line hose from the fresh air valve.

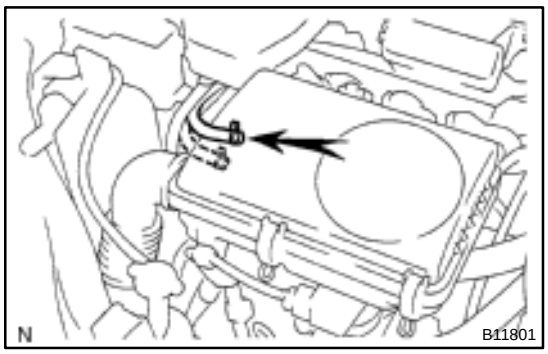

(b) Disconnect the air inlet hose from the air cleaner case.
(c) Blow air into the air inlet line hose.

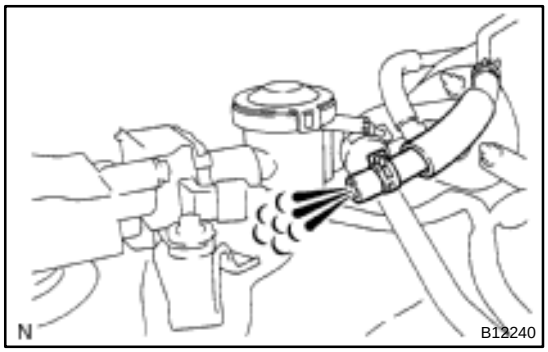

(d) Check that the air flows from the air inlet line hose.
(e) Visually check the air inlet line hoses and pipes.
(f) Check each connection of hoses and pipes.

If there is abnormality, replace the air inlet line hose and pipe.

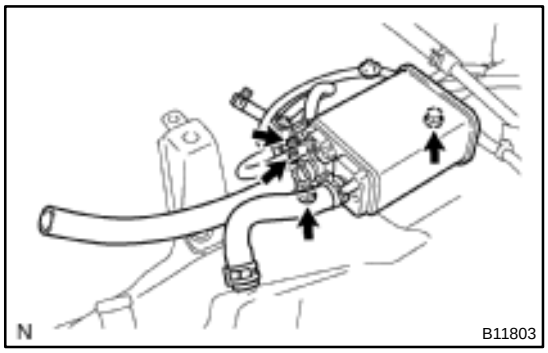

8. REMOVE CHARCOAL CANISTER ASSEMBLY

(a) Remove the fuel tank (See page SF–17)
(b) Disconnect the 3 hoses from the charcoal canister.
(c) Remove the 2 bolts and charcoal canister from the fuel tank.
(d) Remove the 2 bolts and VSV for purge flow switching from the charcoal canister.

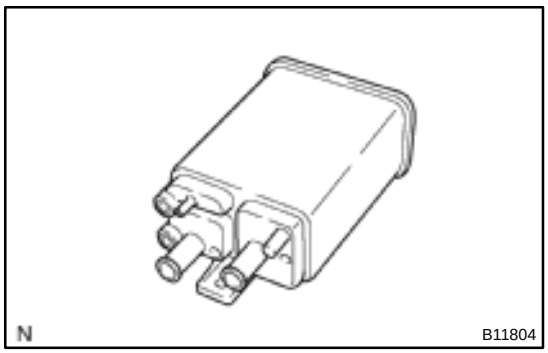

9. INSPECT CHARCOAL CANISTER

(a) Visually check the charcoal canister for cracks or damage.

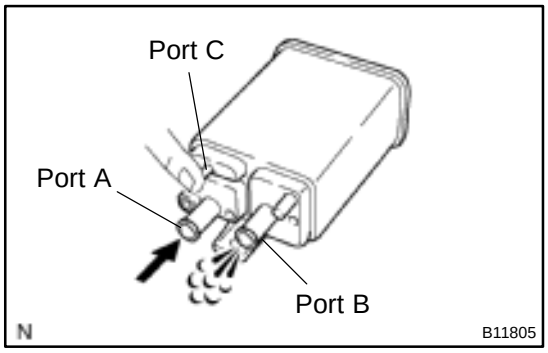

(b) While holding port C closed, using low pressure compressed air (4.9 kPa (50 gf/cm^2, 0.71 psi), blow into port A and check that air flows without resistance from the port B.

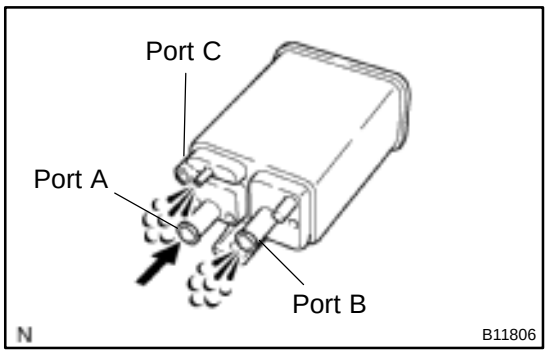

(c) Using low pressure compressed air (4.9 kPa (50 gf/cm^2, 0.71 psi), blow into port A and check that air flows without resistance from the other ports.

If a problem is found, replace the charcoal canister.

10. REINSTALL CHARCOAL CANISTER ASSEMBLY

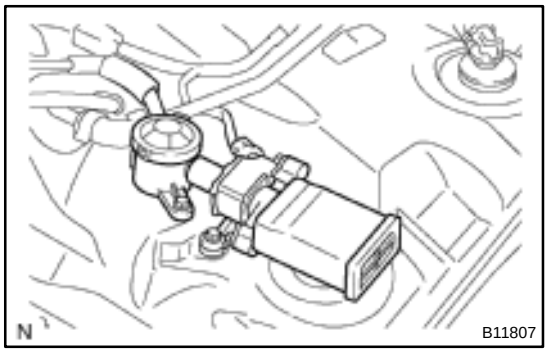

11. REMOVE TRAP FILTER AND FRESH AIR VALVE

(a) Remove the fuel tank (See page SF–17).

(b) Disconnect the air inlet hoses from the VSV for canister closed valve.

(c) Disconnect the connector from the fresh air valve.

(d) Remove the bolt and disconnect the air opening valve from the VSV for canister closed valve.

(e) Remove the 2 bolts and VSV for canister closed valve with the trap filter.

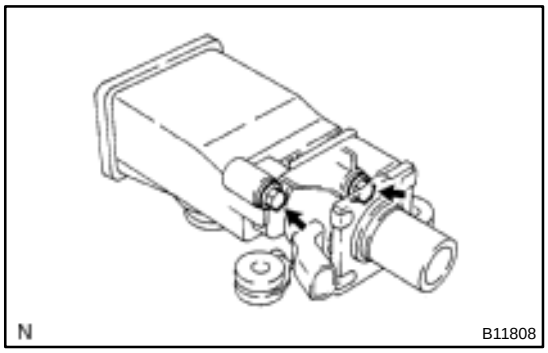

(f) Remove the 2 bolts and trap filter from the VSV for canister closed valve.

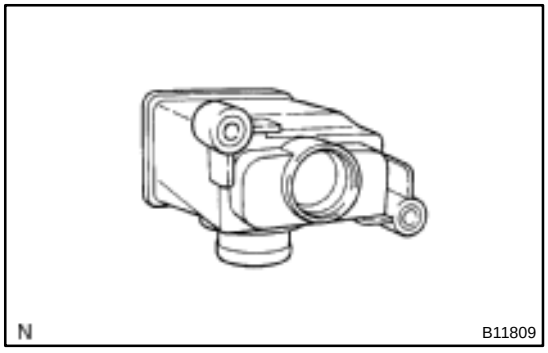

12. INSPECT TRAP FILTER

(a) Visually check the trap filter for cracks or damage.

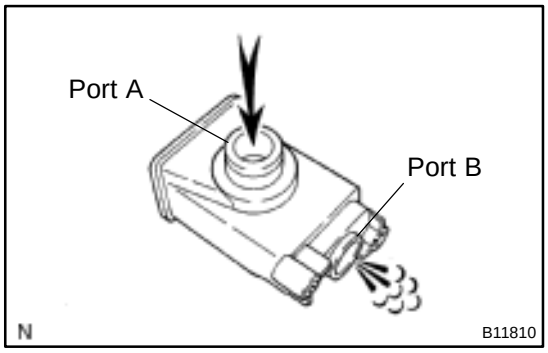

(b) Inspect the trap filter operation.

Blow air into port A, check that the air flows from port B.

If a problem is found, replace the trap filter.

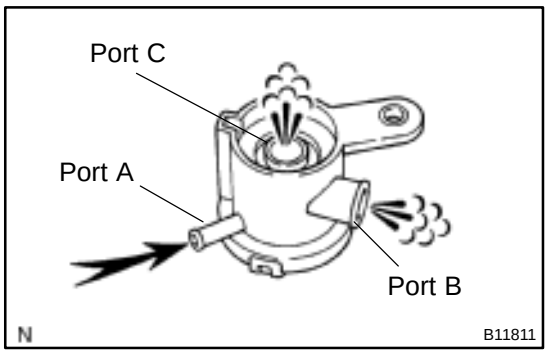

13. INSPECT FRESH AIR VALVE

(a) Visually check the fresh air valve for cracks or damage.

(b) Inspect the fresh air valve operation.
Blow air into port A, check that the air flows from port B and C.

If a problem is found, replace the fresh air valve.

14. REINSTALL TRAP FILTER AND FRESH AIR VALVE

THREE–WAY CATALYTIC CONVERTER (TWC) SYSTEM

EC0HW–01

INSPECTION

1. CHECK TWC FOR DENTS OR DAMAGE

If any port of the heat insulator is damaged to the extent that it contacts the three–way catalytic converter, repair or replace it.

2. CHECK EXHAUST PIPE CONNECTIONS FOR LOOSENESS OR DAMAGE

3. CHECK EXHAUST PIPE CLAMPS FOR WEAKNESS, CRACKS OR DAMAGE

4. CHECK HEAT INSULATOR FOR DAMAGE

5. CHECK FOR ADEQUATE CLEARANCE BETWEEN EXHAUST SYSTEM AND HEAT INSULATOR ON THE BODY

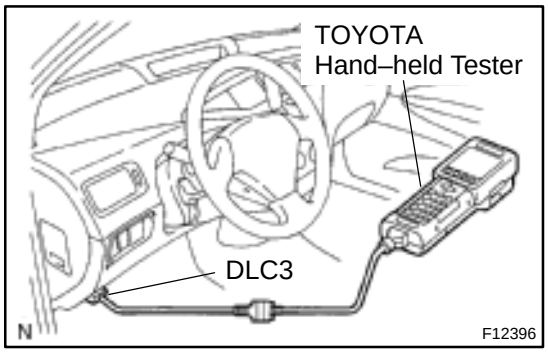

6. INSPECT HC ABSORBER AND CATALYST SYSTEM

(a) Warm up the engine.

(b) TOYOTA hand–held tester:
Forced driving of the VSV for the HC absorber and catalyst system.
(1) Connect a TOYOTA hand–held tester to the DLC3.
(2) Start the engine.
(3) Push the TOYOTA hand–held tester mode on the TOYOTA hand–held tester to operate the VSV for the HC absorber and catalyst system.

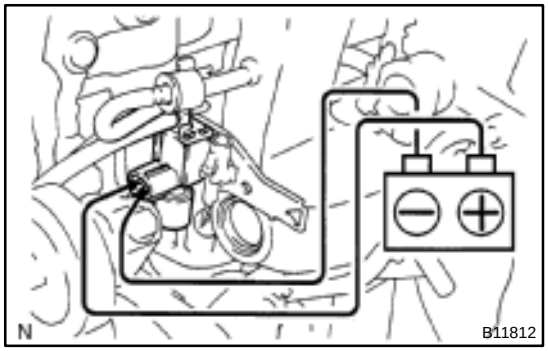

(c) If you have no TOYOTA hand–held tester:
Forced driving of the VSV for the TOYOTA HC absorption catalyst system.
(1) Disconnect the VSV connector for the TOYOTA HC absorption catalyst system.
(2) Connect the positive (+) and negative (–) leads from the battery to the VSV.
(3) Start the engine.

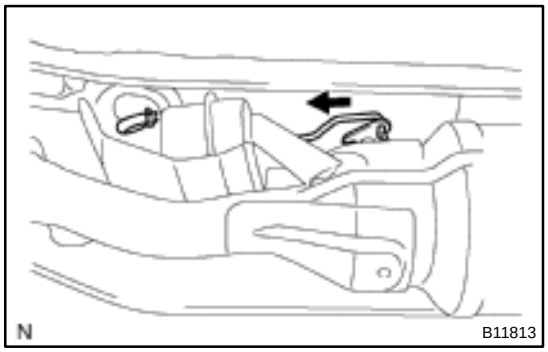

(d) Check that the rod of the actuator is pulled and the valve is operating.

If not in operation, check the vacuum hose line or VSV, actuator.

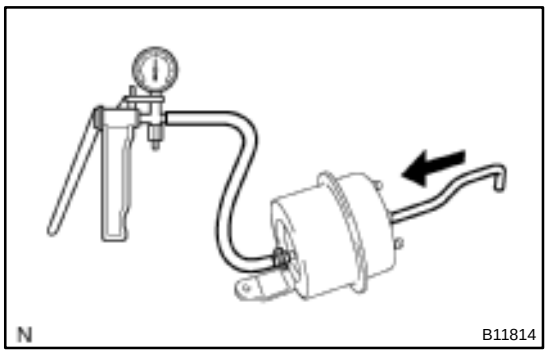

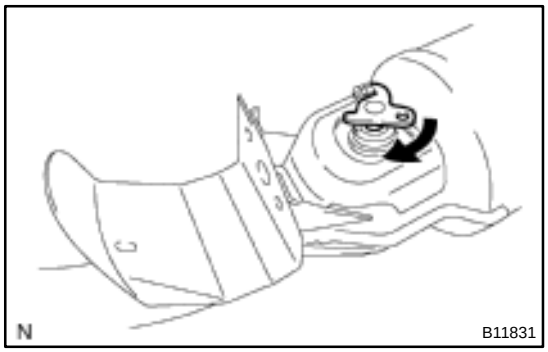

7. INSPECT ACTUATOR

(a) Remove the front exhaust pipe.
(b) Remove the actuator from the front exhaust pipe.
(c) Connect the MITYVAC (hand–held vacuum pump) to the actuator port.
(d) Apply vacuum (more than 33.3 kPa, 250 mmHg, 9.83 in.Hg), make sure that the rod is retracted.

If the not, replace the actuator.

(e) Disconnect the MITYVAC (hand–held vacuum pump) from the actuator port.

8. INSPECT VALVE OPERATION

(a) Turn the valve stay by hand and ensure that it can turn.

If the not, replace the front exhaust pipe.

(b) Install the actuator to the front exhaust pipe.
(c) Install the front exhaust pipe.

SFI SYSTEM

SF1KN–01

PRECAUTION

1. BEFORE WORKING ON THE FUEL SYSTEM , DISCONNECT THE NEGATIVE (–) TERMINAL CABLE FROM THE BATTERY AND HV BATTERY SERVICE PLUG

HINT:

Any diagnostic trouble code retained by the computer will be erased when the negative (–) terminal cable is removed from the battery. Therefore, if necessary, read the diagnosis before removing the negative (–) terminal cable from the battery.

2. DO NOT SMOKE OR WORK NEAR AN OPEN FLAME WHEN WORKING ON THE FUEL SYSTEM

3. KEEP GASOLINE AWAY FROM RUBBER OR LEATHER PARTS

4. MAINTENANCE PRECAUTIONS

(a) In event of engine misfire, these precautions should be taken.
  (1) Check proper connection to battery terminals, etc.
  (2) After repair work, check that the ignition coil terminals and all other ignition system lines are reconnected securely.
  (3) When cleaning the engine compartment, be especially careful to protect the electrical system from water.

(b) Precautions when handling oxygen sensor.
  (1) Do not allow oxygen sensor to drop or hit against an object.
  (2) Do not allow the sensor to come into contact with water.

If vehicle is Equipped with Mobile Radio System (HAM, CB, etc.)

If the vehicle is equipped with a mobile communication system, refer to the precaution in the IN section.

5. AIR INDUCTION SYSTEM

(a) Separation of the engine oil dipstick, oil filler cap, PCV hose, etc. may cause the engine to run out of turn.

(b) Disconnection, looseness or cracks in the parts of the air induction system between the throttle body and cylinder head will allow air suction and cause the engine to run out of turn.

6. ELECTRONIC CONTROL SYSTEM

(a) Before removing SFI wiring connectors, terminals, etc., first disconnect the power by either turning the ignition switch to LOCK or disconnecting the negative (–) terminal cable from the battery.

HINT:

Always check the diagnostic trouble code before disconnecting the negative (–) terminal cable from the battery.

(b) When installing the battery, be especially careful not to incorrectly connect the positive (+) and negative (–) cables.
(c) Do not permit parts to receive a severe impact during removal or installation. Handle all SFI parts carefully, especially the ECM.
(d) Be careful during troubleshooting as there are numerous transistor circuit, and even slight terminal contact can cause further troubles.
(e) Do not open the ECM cover.
(f) When inspecting during rainy weather, take care to prevent entry of water. Also, when washing the engine compartment, prevent water from getting on the SFI parts and wiring connectors.
(g) Parts should be replaced as an assembly.
(h) Care should be taken when pulling out and inserting wiring connectors.
  (1) Release the lock and pull out the connector, pulling on the connectors.
  (2) Fully insert the connector and check that it is locked.

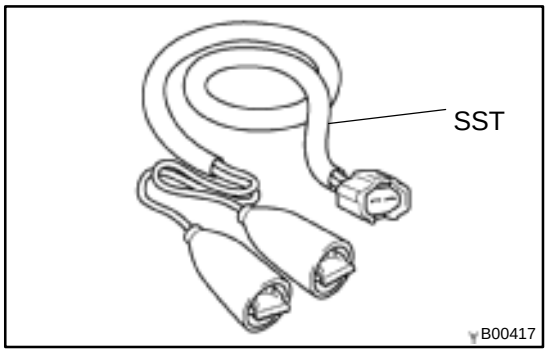

(i) Use SST for inspection or test of the injector or its wiring connector.
SST 09842–30080

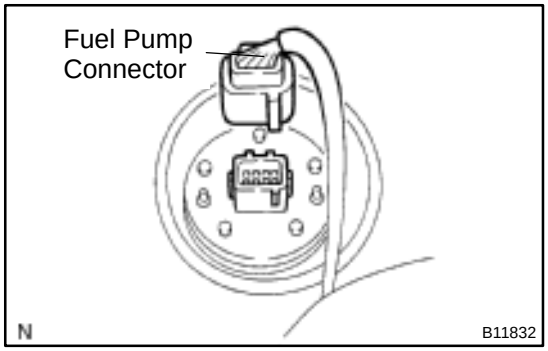

7. FUEL SYSTEM

(a) When disconnecting the high fuel pressure line, a large amount of gasoline will spill out, so observe these procedures.
  (1) Disconnect the fuel pump connector.
  (2) Start the engine. After the engine has stopped on its own, turn the ignition switch to LOCK.
  (3) Disconnect the fuel tube from the fuel tank.
  (4) Drain the fuel remained inside the fuel tube.

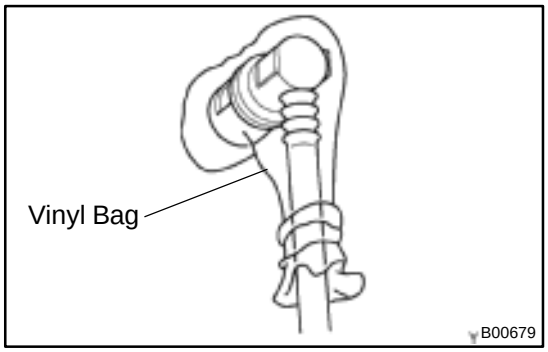

  (5) Prevent the disconnected fuel tube from damaging and mixing foreign objects by covering them with a vinyl bag.

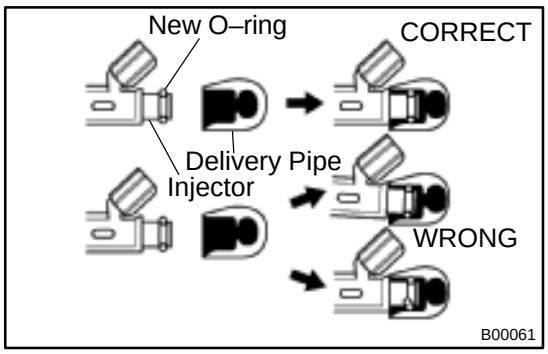

(b) Observe these precautions when removing and installing the injector.
(1) Never reuse the O–ring.
(2) When placing a new O–ring on the injector, take care not to damage it in any way.
(3) Coat a new O–ring with spindle oil or gasoline before installing never use engine, gear or brake oil.

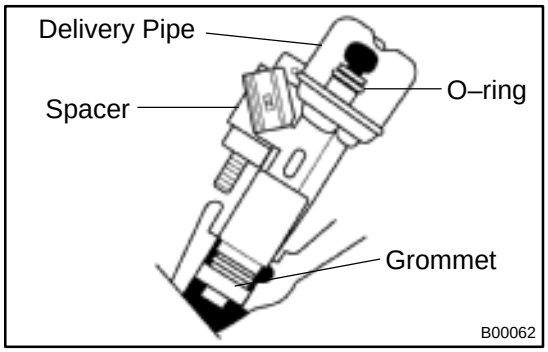

(c) Install the injector to the delivery pipe and cylinder head, as shown in the illustration. Before in installing the injector, must apply spindle oil or gasoline on the place where a delivery pipe or a cylinder head touches on O–ring of the injector.

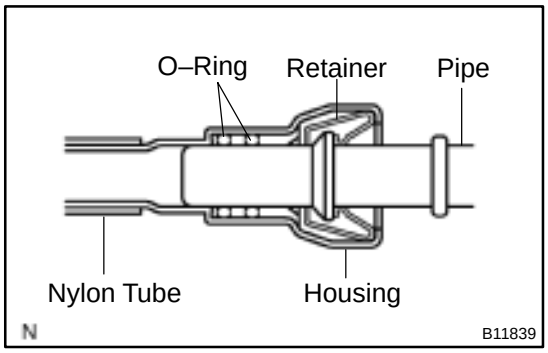

(d) Observe these precautions when disconnecting the fuel delivery pipe. The structure of the metallic connector is shown as left.
(1) Remove the fuel pipe clamp.

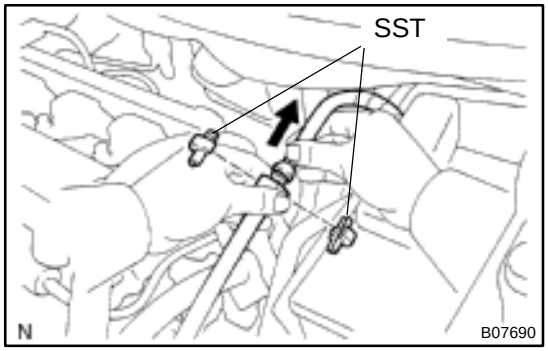

(2) Get the metallic connector of the fuel tube assembly, pull it out towards the rear and hold it as it is.
(3) Assemble SST to the connection as shown.
SST 09268–21010

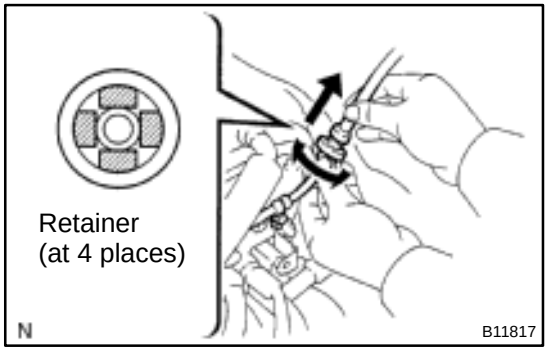

(4) Turn SST, align the retainers inside the connector with SST chamfered parts and incert SST into the connector.

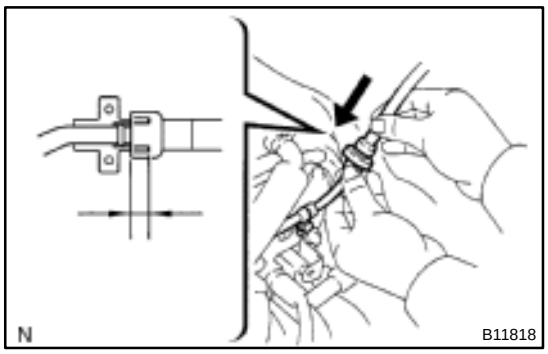

(5) Hold SST as it at step 4, push the connector towards SST to put the retainers on SST champfered parts.

(6) Slide SST and the connector together towards the fuel tube assembly.

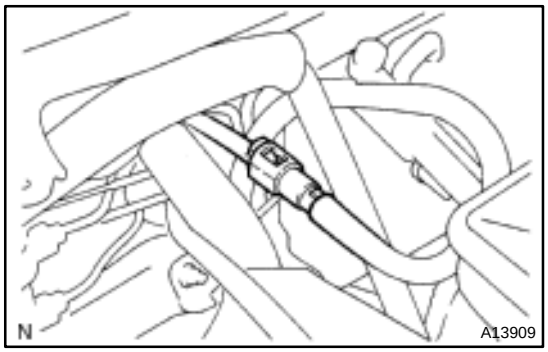

(e) Observe these precautions when disconnecting the fuel tube connector (quick type).

(1) Check if there is any dirt like mud on the pipe and around the connector before disconnecting them and clean the dirt away.

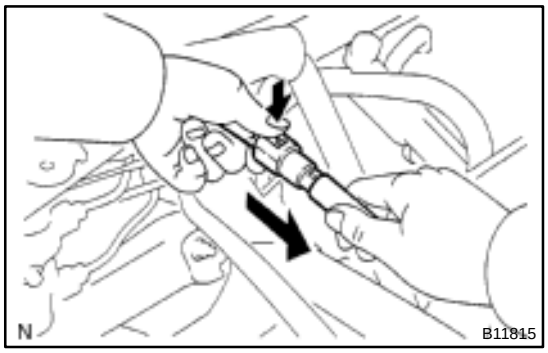

(2) Be sure to disconnect with hands.

(3) When the connector and the pipe are stuck, pinch the retainer between the hands, push and pull the connector to free to disconnect and pull it out. Do not use any tool at this time.

(4) Inspect if there is any dirt or the likes on the seal surface of the disconnected pipe and clean it away.

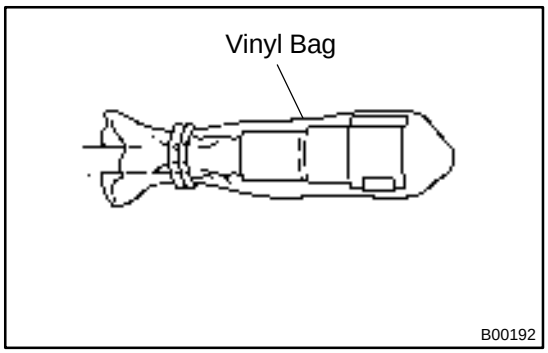

(5) Prevent the disconnected pipe and connector from damaging and mixing foreign objects by covering them with a vinyl bag.

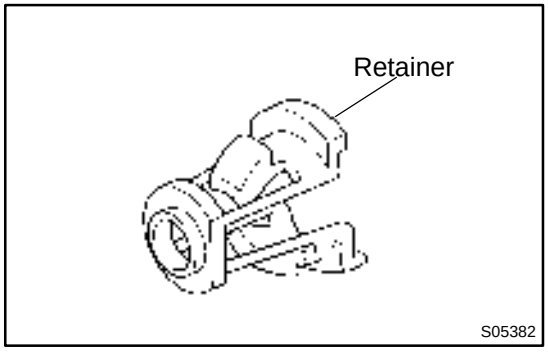

(f) Observe these precautions when connecting the fuel tube connector (quick type).

(1) Do not reuse the retainer removed from the pipe.

(2) Must use hands without using tools when to remove the retainer from the pipe.

(3) Check if there is any damage or foreign objects on the connected part of the pipe.

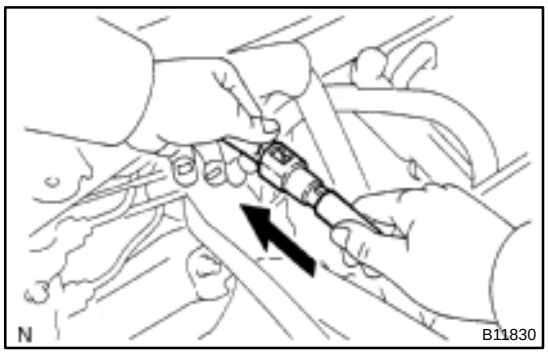

(4) Match the axis of the connector with axis of the pipe, and push in the connector until retainer makes a ”click” sound. In case that the connections is tight, apply little amount of new engine oil on the tip of the pipe.

(5) After having finished the connection, check if the pipe and the connector are securely connected by pulling them.

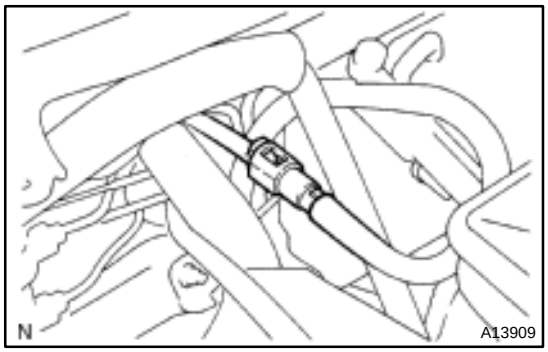

(6) Check if there is any fuel leakage.

(g) Observer these precautions when handling nylon tube.

(1) Pay attention not to turn the connected part of the nylon tube and the quick connector with force when connecting them.

(2) Pay attention not to kink the nylon tube.

(3) Do not remove the nylon tube.

(4) Must not close the piping with the nylon tube by bending it.

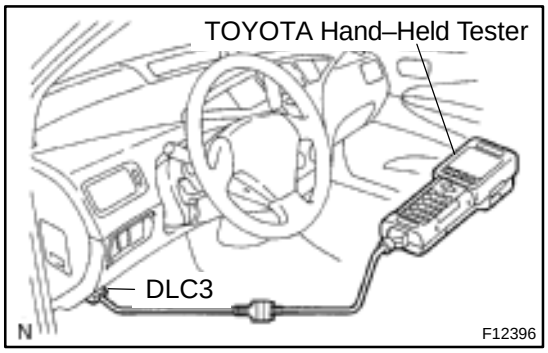

(h) Check that there are no fuel leaks after doing maintenance anywhere on the fuel system.

(1) Connect the TOYOTA hand–held tester to the DLC3.

(2) Turn the ignition switch ON and push TOYOTA hand–held tester main switch ON.

(3) Select the active test mode on the TOYOTA hand–held tester.

(4) Please refer to the TOYOTA hand–held tester operator’s manual for further details.

(5) If you have no TOYOTA hand–held tester, connect the positive (+) and negative (–) leads from the battery to the fuel pump connector.
(See page SF–6)

(6) Check that there are no leaks from any part of the fuel system.

(7) Turn the ignition switch to LOCK.

(8) Disconnect the TOYOTA hand–held tester from the DLC3.

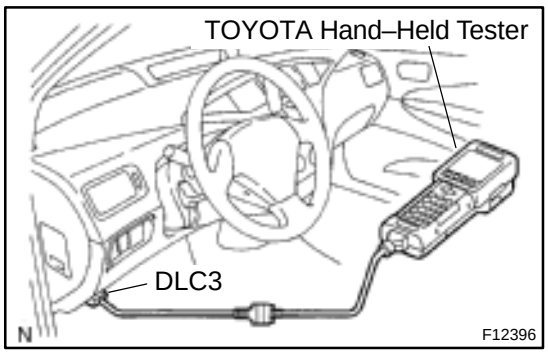

FUEL PUMP

SF1KO–01

ON–VEHICLE INSPECTION

1. CHECK FUEL PUMP OPERATION

(a) Connect the TOYOTA hand–held tester to the DLC3.

(b) Turn the ignition switch ON and TOYOTA hand–held tester main switch ON.

NOTICE:

Do not start the engine.

(c) Select the active test mode on the TOYOTA hand–held tester.

(d) Please refer to the TOYOTA hand–held tester operator's manual for further details.

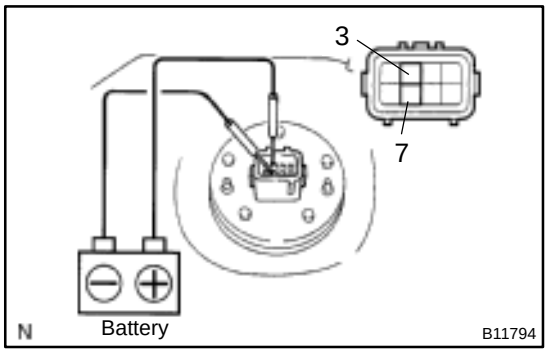

(e) If you have no TOYOTA hand–held tester, connect the positive (+) lead from the battery to terminal 3 of the connecter, and the negative (–) lead to terminal 7.

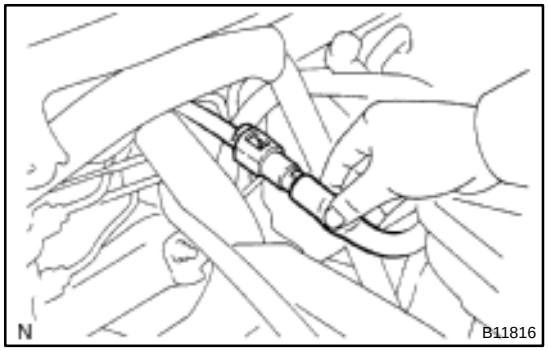

(f) Check that there is pressure in the fuel inlet pipe from the fuel line.

HINT:

If there is fuel pressure, you will hear the sound if fuel following. If there is no pressure, check these parts, Fusible link, Fuses, EFI Main relay, Fuel pump, ECM, and Witting connector.

(g) Turn the ignition switch to LOCK.

(h) Disconnect the TOYOTA hand–held tester from the DLC3.

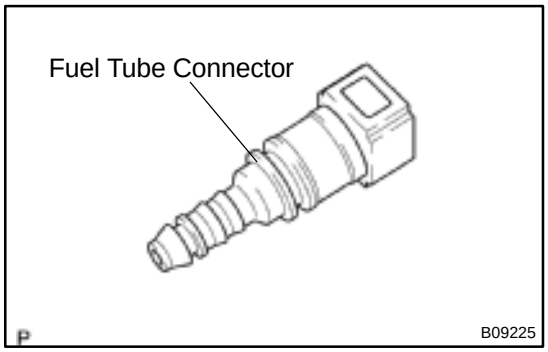

2. CHECK FUEL PRESSURE

(a) Check the battery positive voltage is above 12 V.

(b) Disconnect the negative (–) terminal cable from the battery.

(c) Purchase the new fuel tube and take out the fuel tube connector from its pipe.
Part No.: 23901–21020

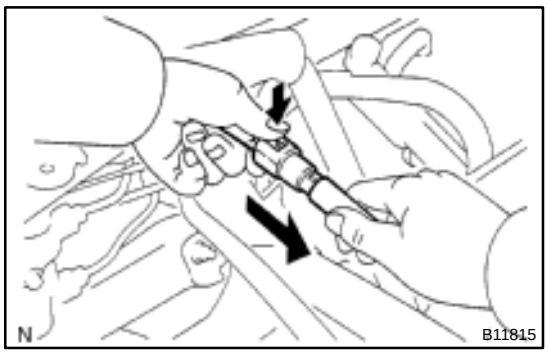

(d) Disconnect the fuel tube (fuel tube connector) from the fuel pipe.

CAUTION:

- **Perform disconnecting operations of the fuel tube connector (quick type) after observing the precautions.**
- **As there is retained pressure in the fuel pipe line, prevent if from splashing inside the engine comportment.**

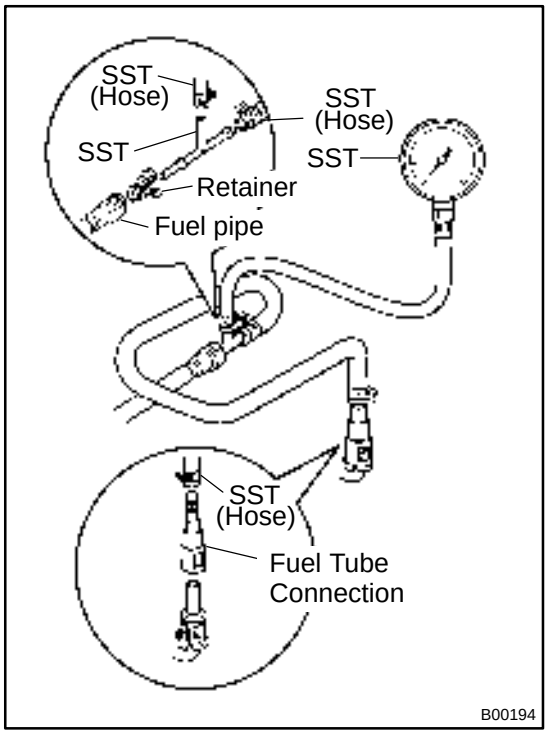

(e) Install SST (pressure gauge) as shown in the illustration by using SST and fuel tube connector.
SST 09268–41047 (95336–08070), 09268–45014 (09268–41200, 09268–41220, 09268–41250)

(f) Wipe off any splattered gasoline.

(g) Reconnect the negative (–) terminal cable to the battery.

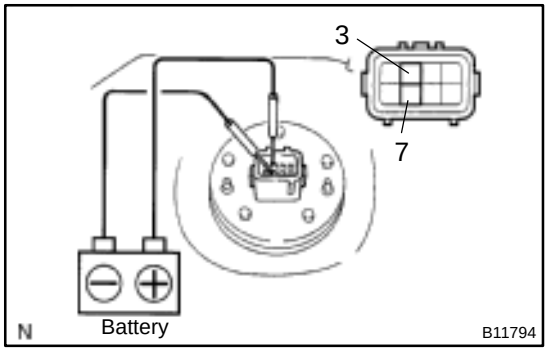

(h) Connect the TOYOTA hand–held tester to the DLC3.

If you have no TOYOTA hand–held tester, connect the positive (+) lead from the battery to terminal 3 of the connecter, and the negative (–) lead to terminal 7.

(i) Measure the fuel pressure.
Fuel pressure:
304 – 343 kPa (3.1 – 3.5 kgf/cm^2, 44 – 50 psi)

If pressure is high, replace the fuel tank.

If pressure is low, check the Fuel hoses and connections, Fuel pump.

(j) Disconnect the TOYOTA hand–held tester from the DLC3.

(k) Start the engine.

(l) Measure the fuel pressure at idle.
Fuel pressure:
304 – 343 kPa (3.1 – 3.5 kgf/cm^2, 44 – 50 psi)

(m) Stop the engine.

(n) Check that the fuel pressure remains as specified for 5 minutes after the engine has stopped.

Fuel pressure:

147 kPa (1.5 kgf/cm^2, 21 psi) or more

If pressure is not as specified, check the fuel pump and/or injectors.

(o) After checking fuel pressure, disconnect the negative (–) terminal cable from the battery and carefully, remove the SST and fuel tube connector to prevent gasoline from splashing.

SST 09268–41047 (95336–08070), 09268–45014 (09268–41200, 09268–41220, 09268–41250)

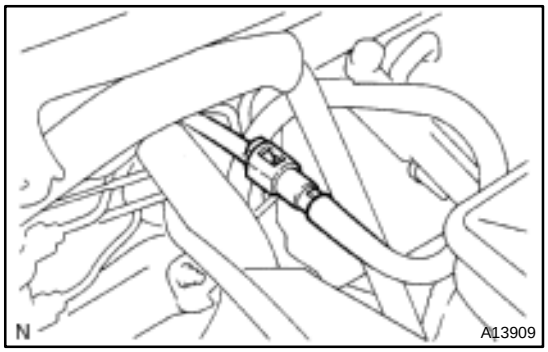

(p) Reconnect the fuel tube (fuel tube connector).

CAUTION:

Perform connecting operations of the fuel tube connector (quick type) after observing the precautions.

(q) Reconnect the negative (–) terminal cable to the battery.

(r) Check for fuel leakage.

3. REMOVE REAR SEAT CUSHION

4. REMOVE FLOOR SERVICE HOLE COVER

5. DISCONNECT FUEL PUMP & SENDER GAUGE CONNECTOR

6. INSPECT FUEL PUMP RESISTANCE

Using an ohmmeter, measure the resistance between terminals 3 and 7.

Resistance: 0.2 – 3.0 Ω at 20˚C (68 ˚F)

If the resistance is not as specified, replace the fuel tank.

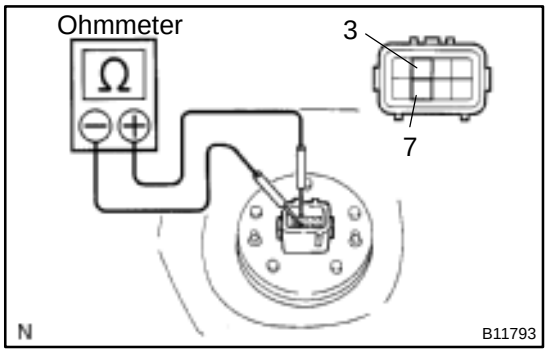

7. INSPECT FUEL PUMP OPERATION

Connect the positive (+) lead from the battery to terminal 3 of the connector and the negative (–) terminal 7. Check that the pump operates.

NOTICE:

- **These tests must be done quickly (within 10 seconds) to prevent the coil burning out.**
- **Keep fuel pump as far away from the battery as possible.**
- **Always do the switching at the battery side.**

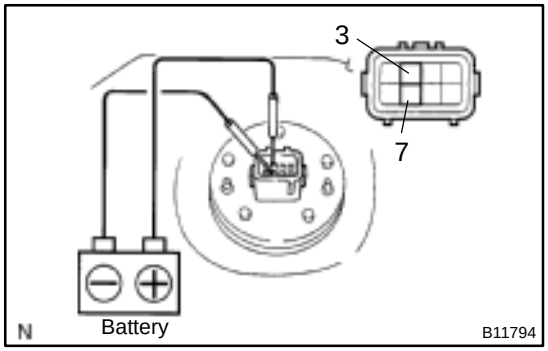

If operation is not as specified, replace the lead wire or fuel tank.

8. RECONNECT FUEL PUMP & SENDER GAUGE CONNECTOR

9. REINSTALL FLOOR SERVICE HOLE COVER

10. REINSTALL REAR SEAT CUSHION

SF09K–11

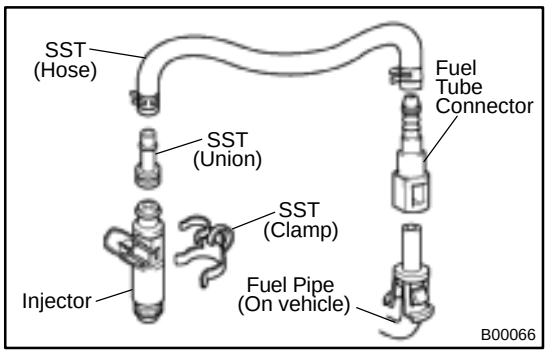

INSPECTION

1. INSPECT INJECTOR INSPECTION

CAUTION:

Keep injector clear of sparks during the test.

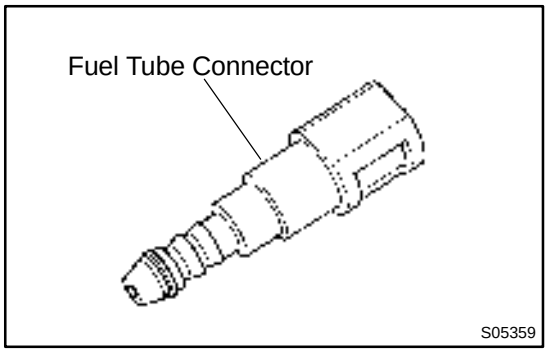

(a) Purchase the new fuel tube and take out the fuel tube connector from its pipe.
Part No. 23901–22010

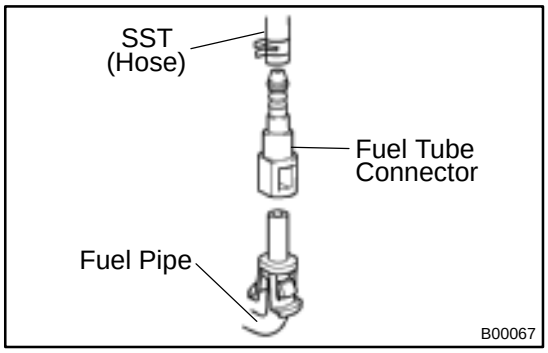

(b) Connect SST (hose) and fuel tube connector to the fuel pipe.
SST 09268–41047

CAUTION:

Perform connecting operations of the fuel tube connector (quick type) after observing the precautions.

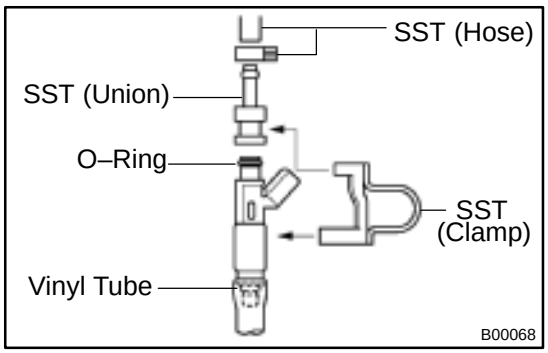

(c) Install the grommet and O–ring to the injector.
(d) Connect SST (union and hose) to the injector, and hold the injector to prevent gasoline from splashing out.
SST 09268–41047
(e) Put the injector into a graduated cylinder.

HINT:

Install a suitable vinyl tube onto the injector to prevent gasoline from splashing out.

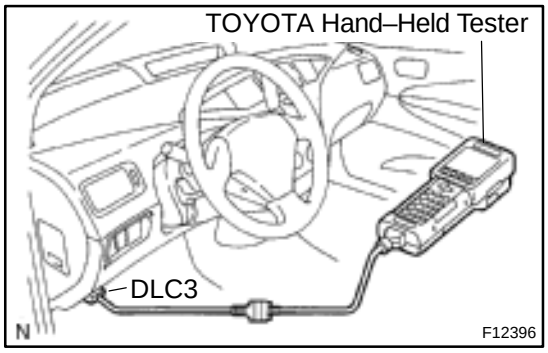

(f) Connect the TOYOTA hand–held tester to the DLC3.
(g) Turn the ignition switch ON and TOYOTA hand–held tester main switch ON.

NOTICE:

Do not start the engine.

(h) Select the active test mode on the TOYOTA hand–held tester.
(i) Please refer to the TOYOTA hand–held tester operator's manual for further details.

(j) If you have no TOYOTA hand–held tester, connect the positive (+) and negative (–) leads from the battery to the fuel pump connector (See page SF–9).

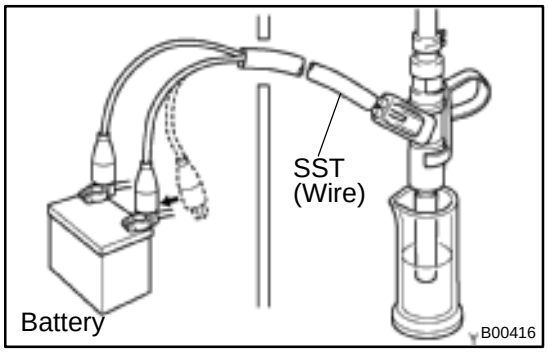

(k) Connect SST (wire) to the injector and battery for 15 seconds, and measure the injection volume with a graduated cylinder. Test each injector 2 or 3 times.
SST 09842–30080
Volume:
36 – 46 cm^3 (2.1 – 2.8 cu in.) per 15 sec.
Difference between each injector:
10 cm^3 (0.6 cu in.) or less

If the injection volume is not as specified, replace the injector.

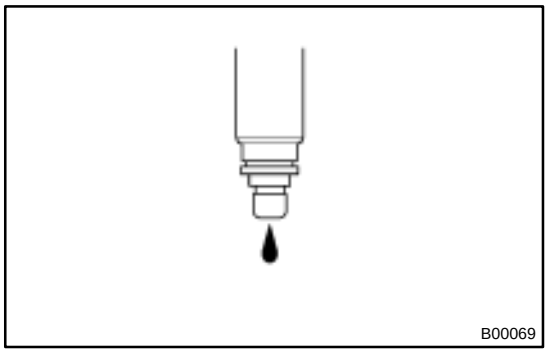

2. INSPECT LEAKAGE

(a) In the condition above, disconnect the test probes of SST (wire) from the battery and check the fuel leakage from the injector.
SST 09842–30080
Fuel drop:
1 drop or less per 12 minutes

(b) Turn the ignition switch to LOCK.

(c) Disconnect the negative (–) terminal cable from the battery.

(d) Remove the SST and fuel tube connector.
SST 09268–41047

CAUTION:

- **Perform disconnecting operations of the fuel tube connector (quick type) after observing the precautions.**
- **As there is retained pressure in the fuel pipe line, prevent it from splashing inside the engine compartment.**

(e) Disconnect the TOYOTA hand–held tester from the DLC3.

SF1KQ–01

INSTALLATION

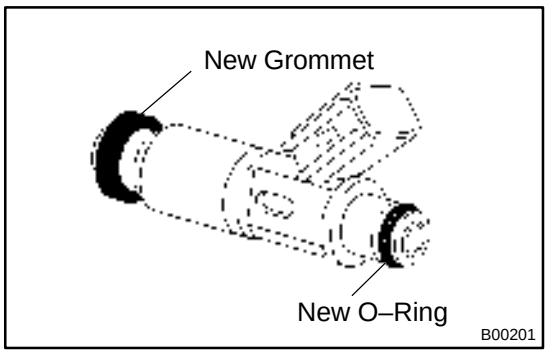

1. INSTALL INJECTORS AND DELIVERY PIPES

(a) Install the grommet to each injector.

(b) Apply a light coat of spindle oil or gasoline to new O–ring and install them to each injector.

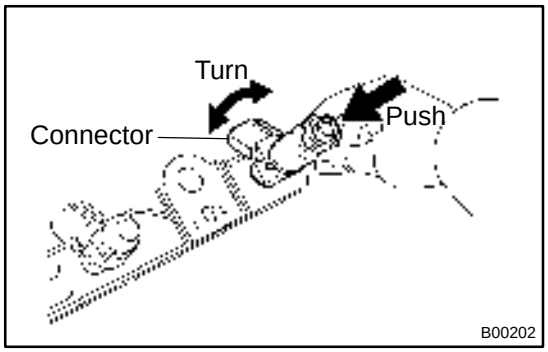

(c) Apply a light coat of spindle oil or gasoline on the place where a delivery pipe touches on O–ring.

(d) While turning the injector clockwise and counterclockwise, push it to the delivery pipes. Install the 4 injectors.

(e) Position the injector connector outward.

(f) Place the 2 spacers in position on the cylinder head.

(g) Place the delivery pipe and fuel pipe together with the 4 injectors in position on the cylinder head.

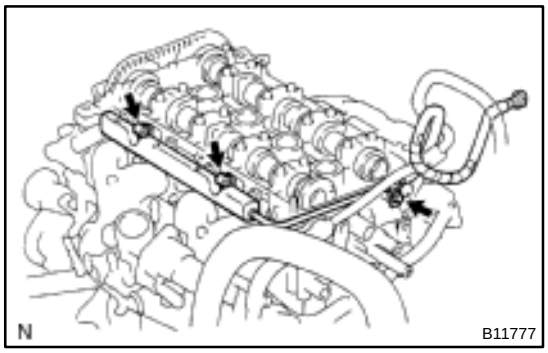

(h) Temporarily install the 2 bolts holding the delivery pipe to the cylinder head.

(i) Temporarily install the bolt holding the fuel pipe to the cylinder head.

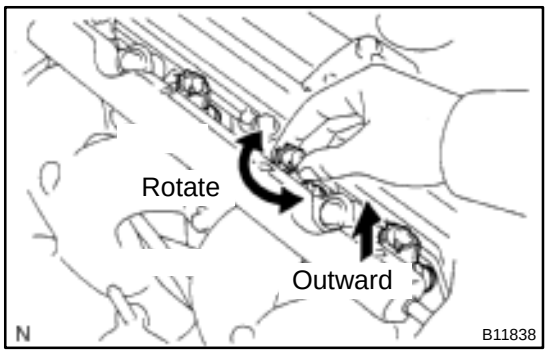

(j) Check that the injectors rotate smoothly.

HINT:

If injectors do not rotate smoothly, the probable cause is incorrect installation of O–ring. Replace the O–ring.

(k) Position the injector connector connector outward.

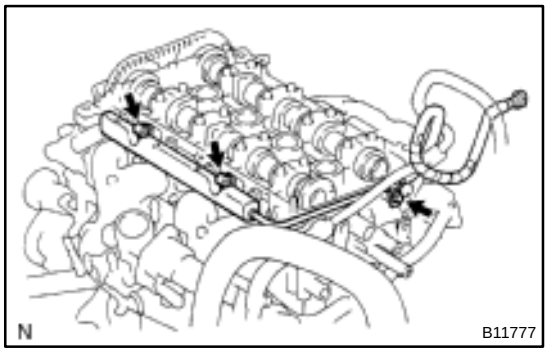

(l) Tighten the 2 bolts holding the delivery pipe to the cylinder head.

Torque: 19 N·m (194 kgf·cm, 14 ft·lbf)

(m) Tighten the bolt holding the fuel pipe to the cylinder head.

Torque: 9.0 N·m (92 kgf·cm, 80 in.·lbf)

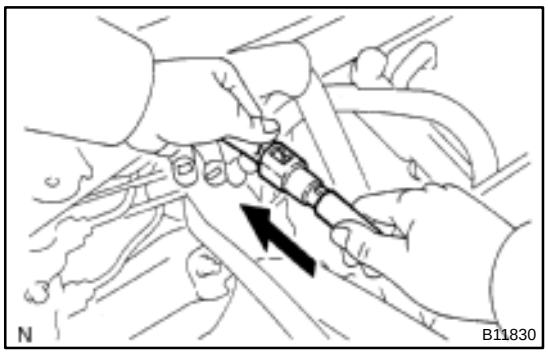

2. CONNECT FUEL TUBE

Connect the fuel tube (fuel tube connector) to the fuel pipe.

CAUTION:

Perform connecting operations of the connector (quick type) after observing the precautions.

3. INSTALL CYLINDER HEAD COVER

(See page EM–21)

SF1KR–01

COMPONENTS

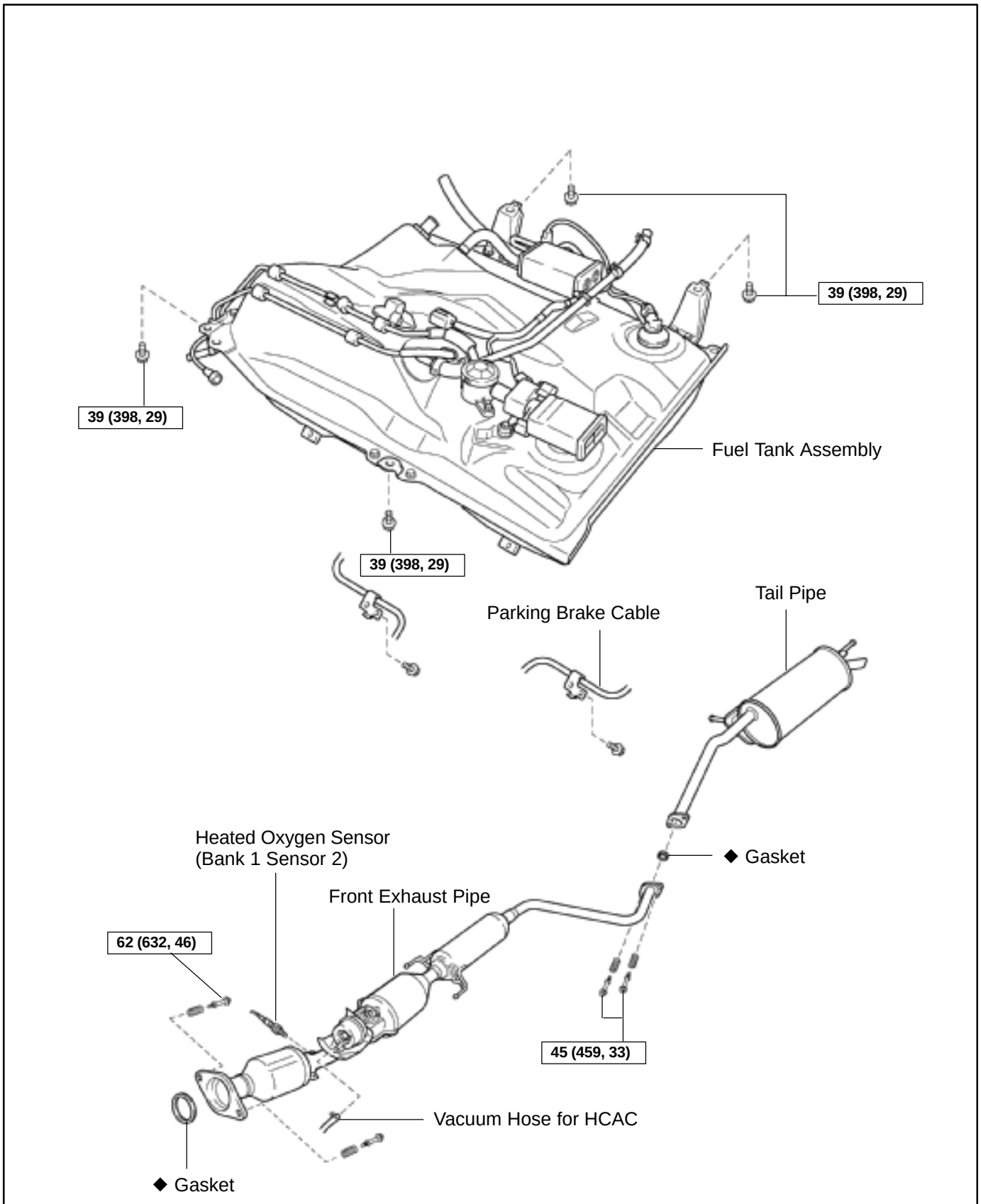

N

N·m (kgf·cm, ft·lbf) : Specified torque

◆ Non–reusable part

B11453

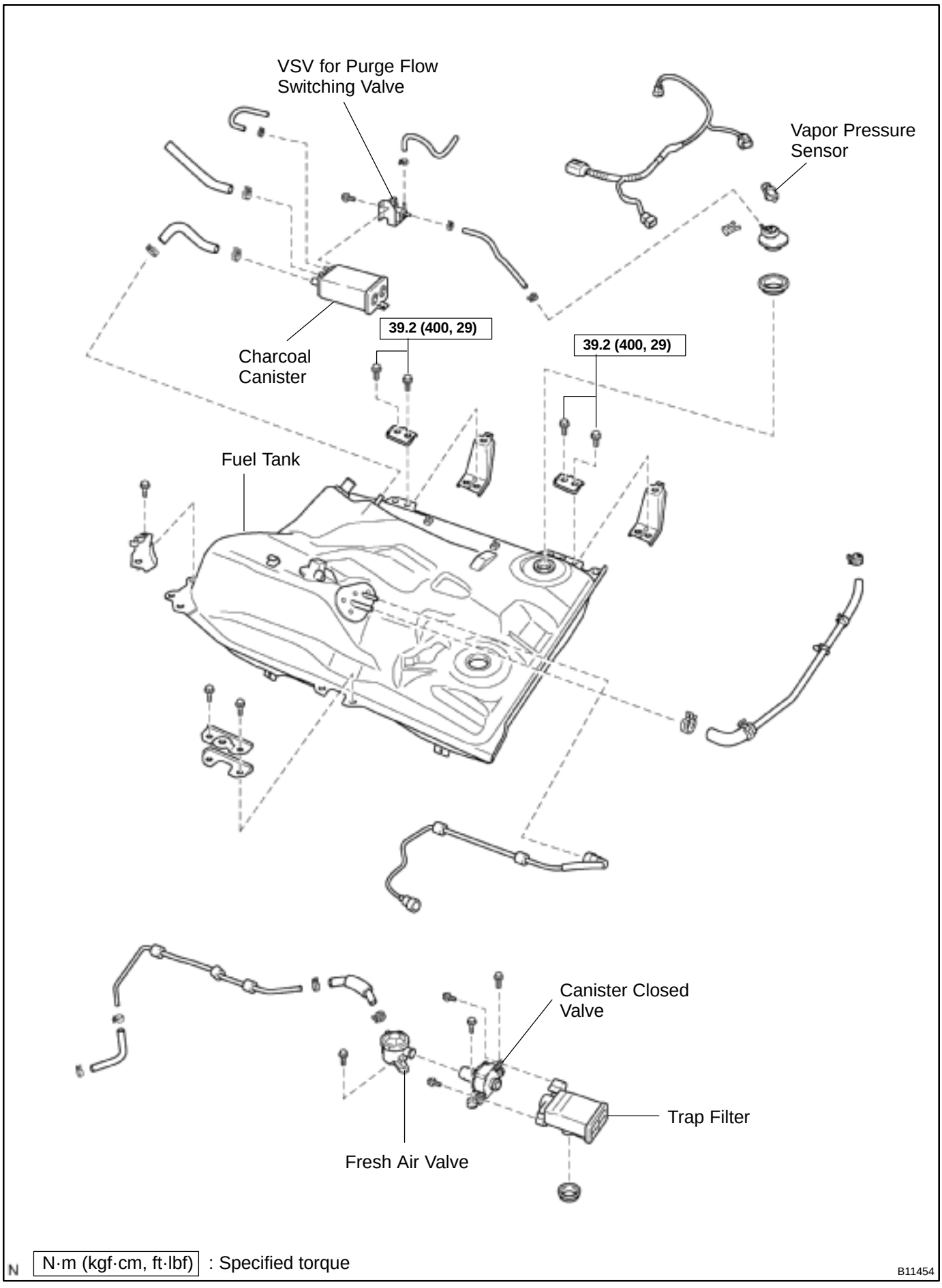
VSV for Purge Flow Switching Valve
Vapor Pressure Sensor
39.2 (400, 29)
39.2 (400, 29)
Charcoal Canister
Fuel Tank
Canister Closed Valve
Trap Filter
Fresh Air Valve
N
N·m (kgf·cm, ft·lbf) : Specified torque
B11454

THROTTLE BODY

SF1KS–01

ON–VEHICLE INSPECTION

1. INSPECT SYSTEM OPERATION

(a) Disconnect the throttle control motor connector.

(b) Turn the ignition switch ON.

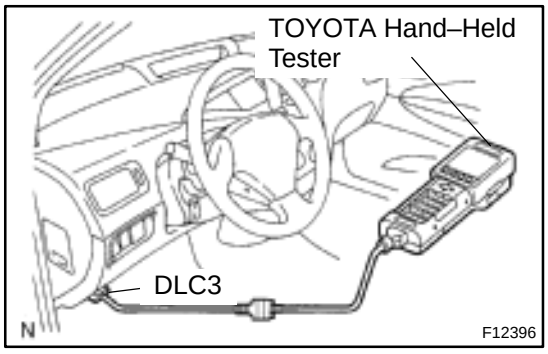

(c) Inspect the throttle position sensor function.

(1) Connect the TOYOTA hand–held tester to the DLC3.

(2) When turning the throttle linkage to the full open position, check that the throttle valve opening percentage (THROTTLE POS) of the CURRENT DATA shows the standard value.

Throttle valve opening percentage: 60 % or more

If operation is not as specified, check that the throttle position sensor, wiring and ECM.

(d) Connect the throttle control motor connector.

(e) Transit to the inspection mode and start the engine.

(f) Allow the engine to warm up to normal operating temperature.

(g) To check the charging rate of the HV battery, move the shift lever to D range and check that the engine stops.

If it does not stop, the charging rate may be low. With the shift lever in P range, keep running the engine for a while. Then, shift lever to D range again and check that the engine stops.

(h) Start the engine.

(i) Turn the A/C switch ON and OFF, and check the idle speed.

Idle speed (Transmission in neutral):
1,000 ± 50 rpm (A/C OFF)
1,200 ± 50 rpm (A/C ON)

NOTICE:

Perform inspection under condition without electrical load.

(j) Stop the engine and disconnect TOYOTA hand–held tester from the DLC3.

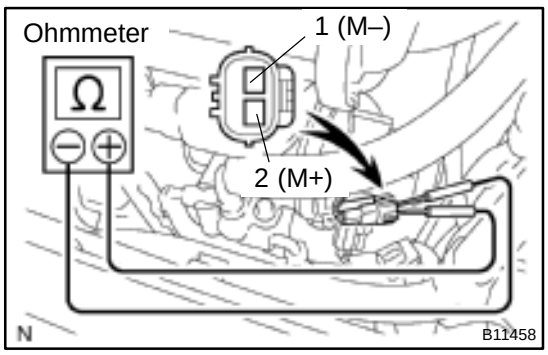

2. INSPECT THROTTLE CONTROL MOTOR

(a) Disconnect the throttle control motor connector.

(b) Using an ohmmeter, measure the resistance between terminal M+ and M–.

Resistance: 0.3 – 100 Ω at 20˚C (68˚F)

If the resistance is not as specified, replace the throttle body.

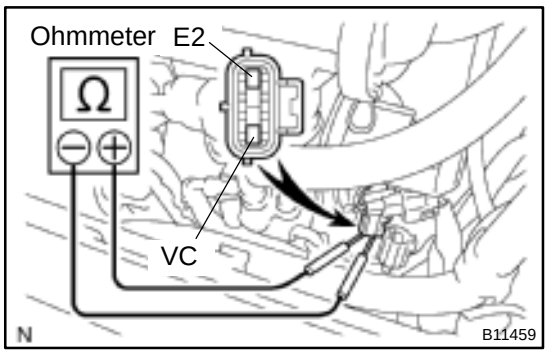

(c) Reconnect the throttle control motor connector.

3. INSPECT THROTTLE POSITION SENSOR

(a) Disconnect the throttle position sensor connector.

(b) Using an ohmmeter, measure the resistance between terminals VC and E2.

Resistance: 1.2 – 3.2 kΩ at 20˚C (68˚F)

If the resistance is not as specified, replace the throttle position sensor. (See page SF–29)

(c) Reconnect the throttle position sensor connector.

4. INSPECT ACCELERATOR PEDAL POSITION SENSOR (See page SF–59)

SF0NM–09

COMPONENTS

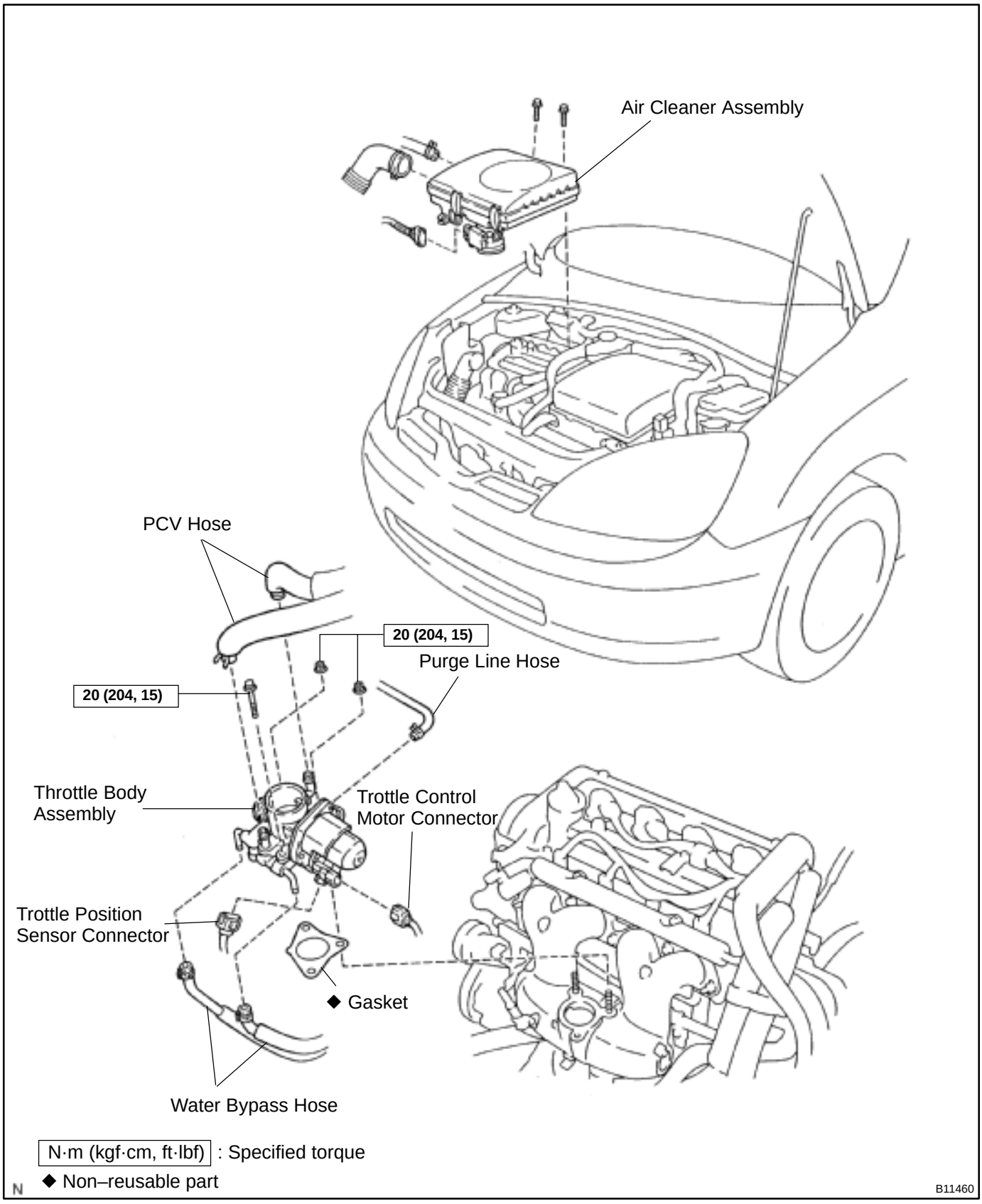

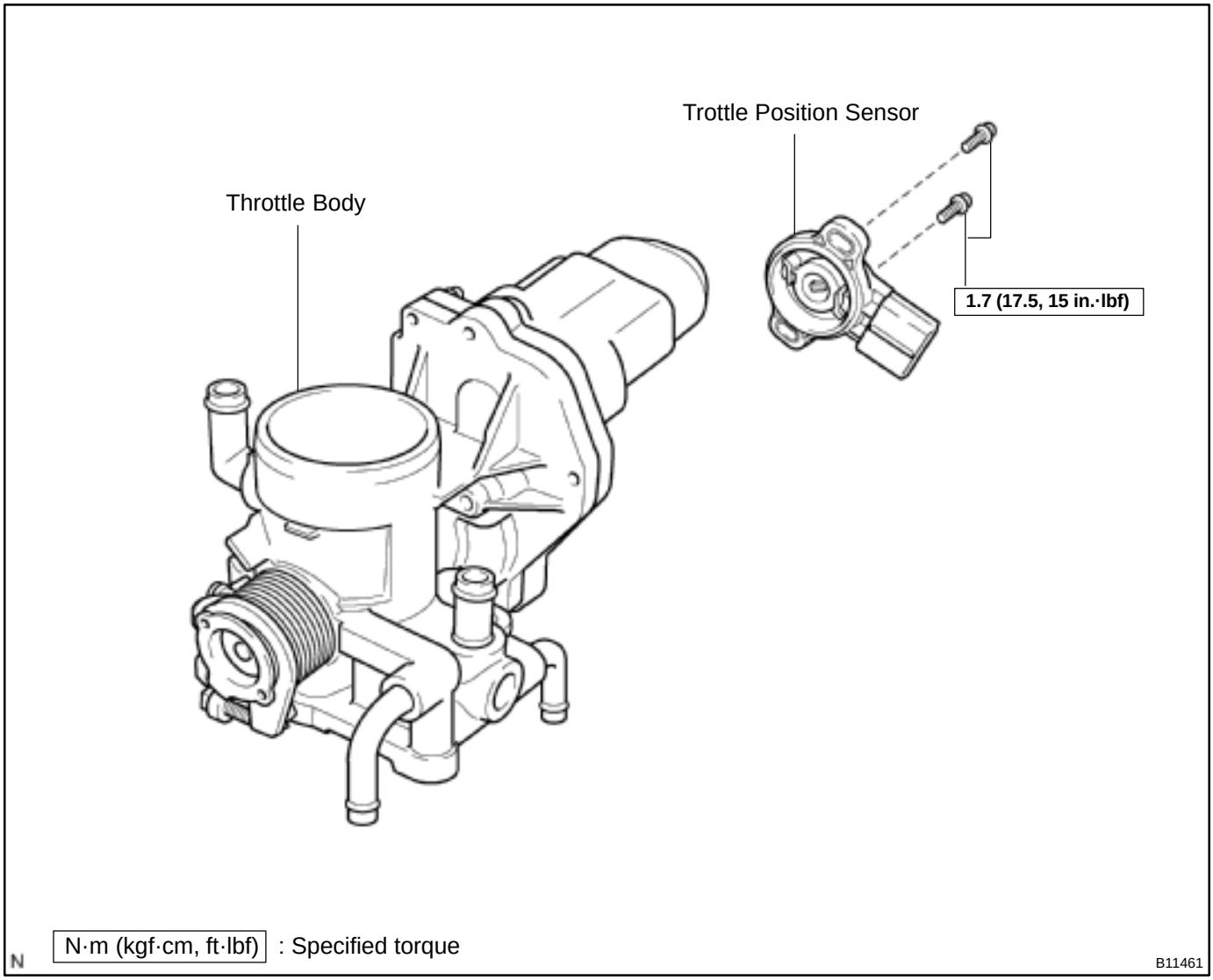
Trottle Position Sensor
Throttle Body
1.7 (17.5, 15 in.·lbf)
N·m (kgf·cm, ft·lbf) : Specified torque
N
B11461

SF1KT–01

REPLACEMENT

NOTICE:

- **To prevent deterioration, do not shock the throttle position sensor.**
- **Mixing of the foreign objects may cause the gear locking, so thoroughly check that there is no stuck of any foreign objects and clean up if any.**

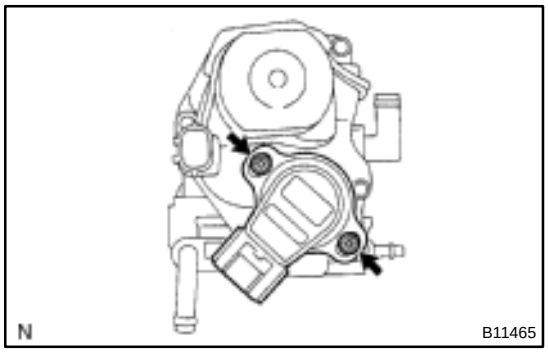

REPLACE THROTTLE POSITION SENSOR

(a) Remove the 2 set screws and throttle position sensor.

(b) Reinstall the throttle position sensor.

(1) Check that the throttle valve is under the condition of the opener opening angle (about 3.5˚).

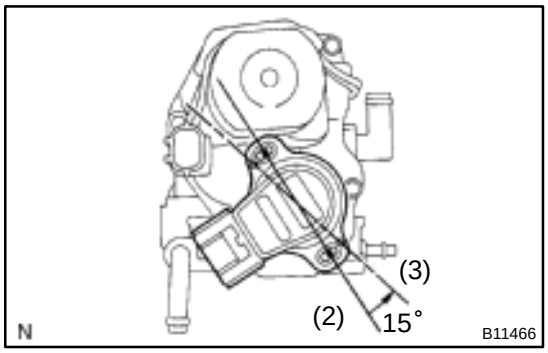

(2) Install the sensor to the place where is at 15˚ rotated to the right from the specified installation position.

(3) Gradually turn sensor counterclockwise until it touches the throttle valve shaft and temporarily torque the 2 set screws.

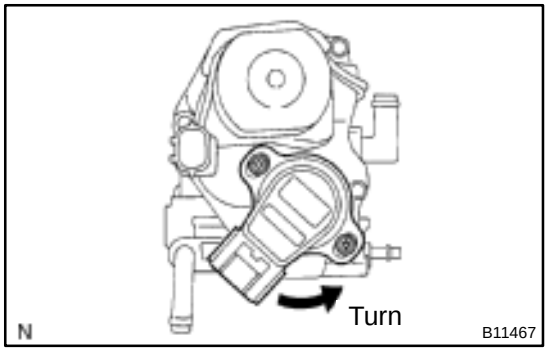

(c) Adjust the throttle position sensor.

(1) Connect the throttle position sensor connector.

NOTICE:

At this time, do not connect the throttle control motor connector.

(2) Connect the TOYOTA hand–held tester to the DLC3.

(3) Turn the ignition switch ON.

NOTICE:

After turning the ignition switch ON, do not depress the accelerator pedal.

(4) While reading the value of the throttle valve opening percentage (THROTTLE POS) of the CURRENT DATA, turn the throttle position sensor slowly to left and set the sensor at the center value of the standard value, and then torque the screws.

Torque: 1.7 N·m (17.5 kgf·cm, 15 in.·lbf)

Standard throttle valve opening percentage:

14.8 ± 0.8 %

NOTICE:

At the time of tightening the screw, as the sensor itself tends to turn causing to slanting, check that it is within the standard value after having finished the torque.

(5) Fully close the throttle valve with a screwdriver and check that the value of the throttle valve opening percentage (THROTTLE POS) of the CURRENT DATA stays with the standard value.

Standard throttle valve opening percentage:

10 – 14 %

If the throttle valve opening percentage is not as specified, repeat steps (4) through (5).

(6) Paint the sensor set screws.

(7) Turn the ignition switch OFF.

(8) Disconnect the TOYOTA hand–held tester or from the DLC3.

(9) Disconnect the throttle position sensor connector.

SF1KX–01

INSPECTION

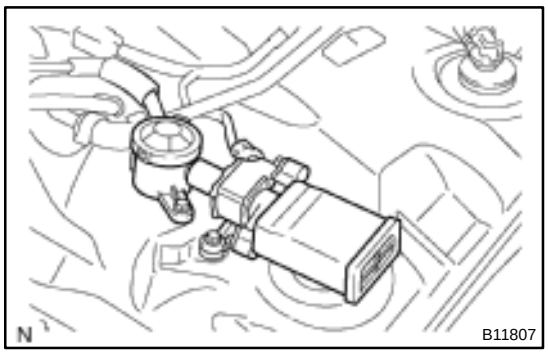

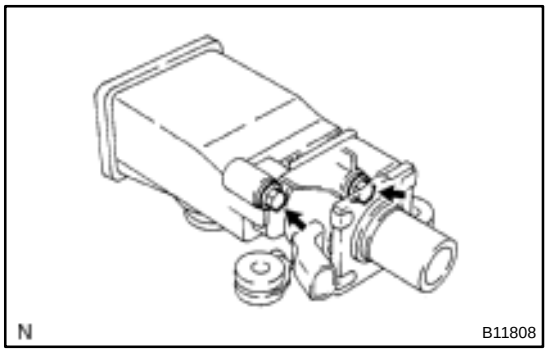

1. REMOVE FUEL TANK (See page SF–17)

2. REMOVE VSV

(a) Disconnect the air inlet hoses from the VSV for canister closed valve.

(b) Disconnect the connector from the VSV for canister closed valve.

(c) Remove the bolt and disconnect the air opening valve from the VSV for canister closed valve.

(d) Remove the 2 bolts and VSV for canister closed valve with the trap filter.

(e) Remove the 2 bolts and VSV for canister closed valve from the trap filter.

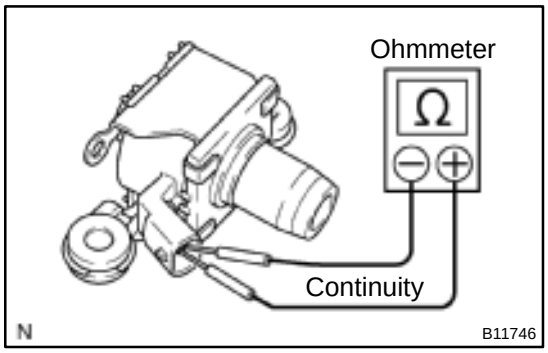

3. INSPECT VSV FOR OPEN CIRCUIT

Using an ohmmeter, check that there is continuity between the terminals.

Resistance: 25 – 30 Ω at 20 °C (68 °F)

If there is no continuity, replace the VSV.

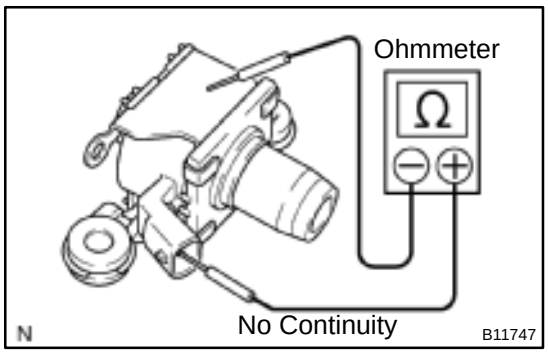

4. INSPECT VSV FOR GROUND

Using an ohmmeter, check that there is no continuity between each terminal and the body.

If there is no continuity, replace the VSV.

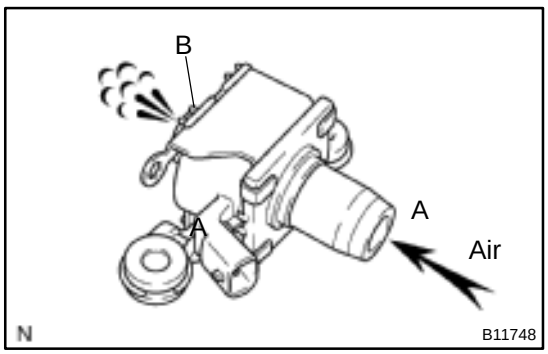

5. INSPECT VSV OPERATION

(a) Check that air flows from ports A to B.

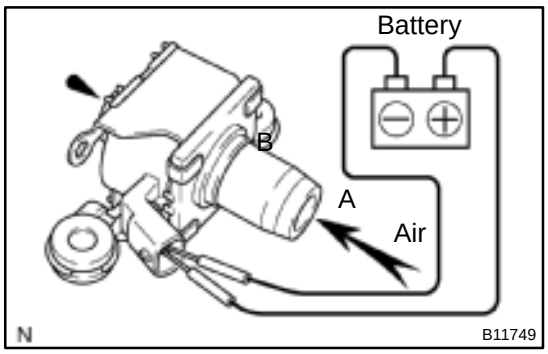

(b) Apply battery positive voltage across the terminals.
(c) Check that air does not flow from ports A to B.

If operation is not as specified, replace the VSV.

6. REINSTALL VSV

CO04E–09

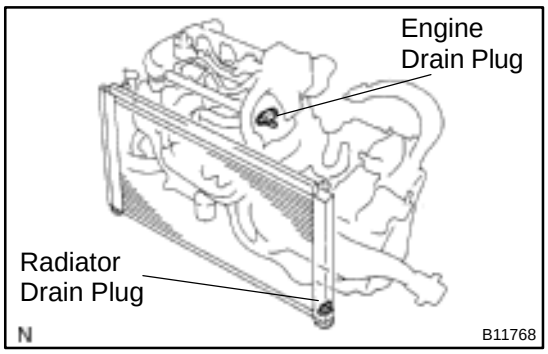

REPLACEMENT

1. DRAIN ENGINE COOLANT

(a) Remove the radiator cap.

CAUTION:

To avoid the danger of being burned, do not remove the radiator cap while the engine and radiator are still hot, as fluid and steam can be blown out under pressure.

(b) Loosen the radiator drain plug (on the right side of the radiator lower tank) and engine drain plug on the engine coolant drain union (on the right front of the cylinder block), and drain the coolant.

(c) Close the drain plugs.

Torque: 12.7 N·m (130 kgf·cm, 9 ft·lbf) for engine

2. FILL ENGINE COOLANT

(a) Slowly fill the system with coolant.

- Use of improper coolants may damage the engine cooling system.
- Use ”Toyota Long Life Coolant” or equivalent and mix it with plain water according to the manufacture directions.
- Use of the coolant which includes more than 50% [freezing protection down to –35˚C (–31˚F)] or 60% [freezing protection down to –50˚C (–58˚F)] of ethylene–glycol is recommended, but not more than 70%.

NOTICE:

- **Do not use an alcohol type coolant or plain water alone.**
- **The coolant should be mixed with plain water (preferably demineralized water or distilled water).**
  Capacity: 4.9 litters (5.2 US qts, 4.3 lmp qts)

(b) Install the radiator cap and start the engine. After repeatedly idling and racing the engine several times for approx. 2 minutes, stop the engine.

(c) Remove the radiator cap and fill the radiator with engine coolant until it reaches the rim of the radiator filler.

If the engine coolant level of the radiator drops when grasping the radiator inlet hose and outlet hose several times by hand, add more coolant.

(d) Install the radiator cap. Activate inspection mode (See page IN–10). Warm it up until the radiator fan starts to turn with the engine speed at less than 2,500 rpm.

NOTICE:

Stop the engine immediately after the radiator fan starts to turn.

(e) Stop the engine and cool it down.

NOTICE:

Cool down the engine until its temperature becomes below 50˚C (122 ˚F).

(f) Remove the radiator cap and check the engine coolant level of the radiator. If it has dropped, repeat steps (d) to (g).

(g) Bleed air from water pump.
Set the vehicle in the following conditions:
- Ignition switch ON
- Blower speed control dial to LO
- Temperature control dial to MAX. HOT

(h) Operate the water pump in the following conditions:
- The engine stopped
- The blower switch ON
- Temperature control dial at MAX. HOT

HINT:
Operate the water pump until a sound of the air–containing engine coolant can not be heard from the heater core.

(i) When the engine coolant remains full, fill the radiator reservoir tank with engine coolant to the maximum level.

3. CHECK FOR COOLANT LEAKS

4. CHECK ENGINE COOLANT SPECIFIC GRAVITY IS CORRECT

CO143–01

ON–VEHICLE INSPECTION

1. REMOVE RADIATOR CAP

CAUTION:

To avoid the danger of being burned, do not remove the radiator cap while the engine and radiator are still hot, as fluid and steam can be blown out under pressure.

2. INSPECT RADIATOR CAP

NOTICE:

- **If the radiator cap has contaminations, always rinse it with water.**
- **Before using a radiator cap tester, wet the relief valve and pressure valve with engine coolant or water.**
- **When performing steps (a) and (b) below, keep the radiator cap tester at an angle of over 30˚above the horizontal.**

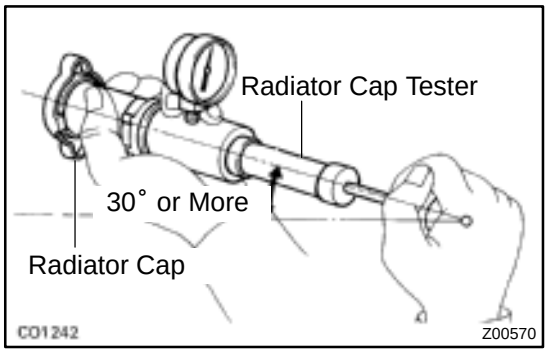

(a) Using a radiator cap tester, slowly pump the tester and check that air is coming from the vacuum valve.

Pump speed: 1 push/(3 seconds or more)

NOTICE:

Push the pump at a constant speed.

If air is not coming from the vacuum valve, replace the radiator cap.

(b) Pump the tester and measure the relief valve opening pressure.

Pump speed: 1 push within 1 seconds

NOTICE:

This pump speed is for the first pump only (in order to close the vacuum value). After this, the pump speed can be reduced.

Standard opening pressure:

74 – 103 kPa (0.75 – 1.05 kgf·cm^2, 10.7 – 14.9 psi)

Minimum opening pressure:

79 kPa (0.8 kgf·cm^2, 11.5 psi)

HINT:

Use the tester's maximum reading as the opening pressure. If the opening pressure is less than minimum, replace the radiator cap.

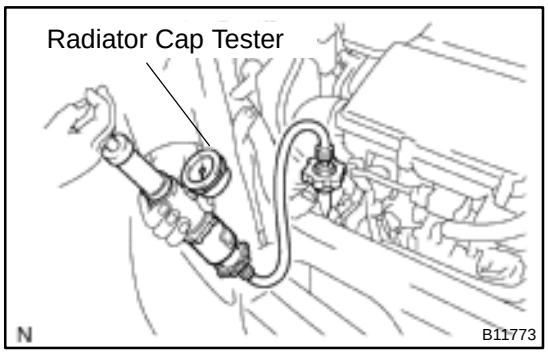

3. INSPECT COOLING SYSTEM FOR LEAKS

(a) Fill the radiator with coolant and attach a radiator cap tester.

(b) Warm up the engine.

(c) Pump it to 118 kPa (1.2 kgf·cm^2, 17.1 psi), and check that the pressure drops.

If the pressure drops, check the hoses, radiator or water pump for leaks. If no external leaks are found, check the heater core, cylinder block and head.

4. REINSTALL RADIATOR CAP

CO145–01

REMOVAL

1. DISCHARGE REFRIGERANT FROM REFRIGERATION SYSTEM

HINT:

At the time of installation, please refer to the following item.

Evacuate air from refrigeration system.

Charge system with refrigerant and inspect for leakage of refrigerant.

Specified amount: 500 ± 50 g (17.64 ± 1.76 oz.)

2. DRAIN ENGINE COOLANT FROM RADIATOR

HINT:

It is not necessary to drain out all the coolant.

3. REMOVE ELECTRIC COOLING FAN ASSEMBLY (See Page CO–22)

4. REMOVE FRONT BUMPER (See Page BO–4)

5. REMOVE RADIATOR RESERVOIR HOSE

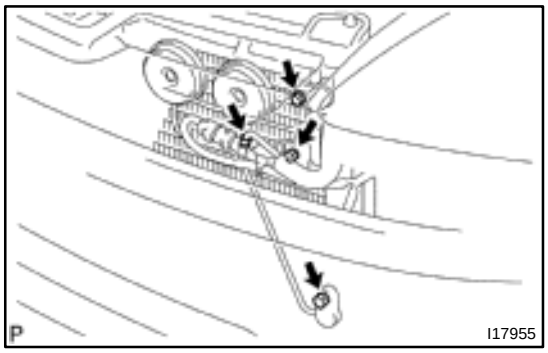

6. DISCONNECT DISCHARGE AND LIQUID TUBE

(a) Remove the 2 bolts and disconnect discharge and liquid tube.

Torque: 5.4 N·m (55 kgf·cm, 48 in.·lbf)

NOTICE:

Cap open the fittings immediately to keep moisture or dirt out of the system.

HINT:

At the time of installation, please refer to the following item.

Lubricate 2 new O–rings with compressor oil and install them to the tubes.

(b) Remove the bolt.

(c) Disconnect the liquid tube and remove the bracket.

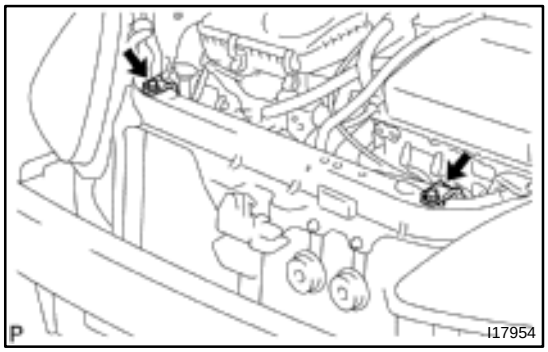

7. REMOVE RADIATOR UPPER SUPPORT

Remove the 2 bolts and 2 radiator upper supports.

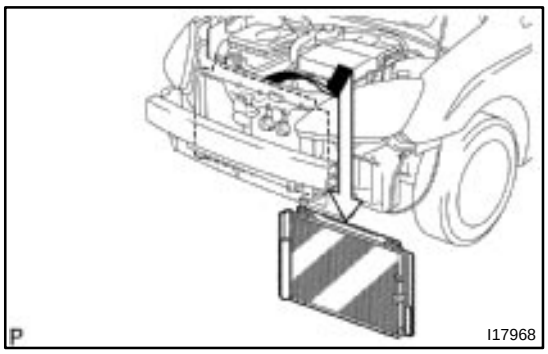

8. REMOVE RADIATOR & CONDENSER MODULE

(a) Push the radiator & condenser module toward engine.

(b) Pull up the radiator until the lower radiator support is removed.

(c) Pull it downward to remove it.

CO149–01

REMOVAL

1. DISCHARGE REFRIGERANT FROM REFRIGERATION SYSTEM

HINT:

At the time of installation, please refer to the following item.

Evacuate air from refrigeration system.

Charge system with refrigerant and inspect for leakage of refrigerant.

Specified amount: 500 ± 50 g (17.64 ± 1.76 oz.)

2. DRAIN ENGINE COOLANT FROM RADIATOR

HINT:

It is not necessary to drain out all coolant.

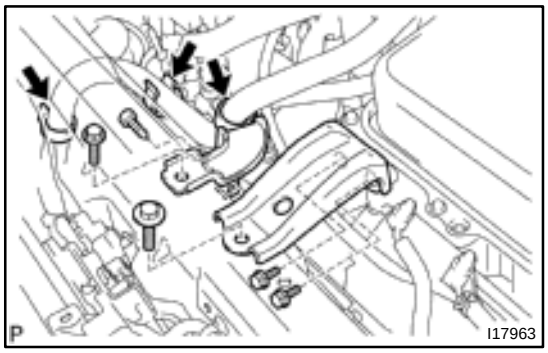

3. REMOVE BRACKETS

(a) Remove the water hose from fan shroud.

(b) Remove the 5 bolts and 2 brackets.

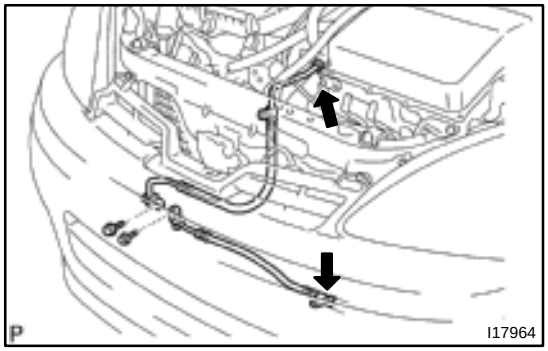

4. REMOVE SUCTION AND DISCHARGE HOSES

(a) Remove the 2 bolts and disconnect the both hoses.

Torque: 10 N·m (100 kgf·cm, 7 ft·lbf)

HINT:

At the time of installation, please refer to the following item.

Lubricate 2 new O–rings with compressor oil and install them to the tubes.

(b) Loosen the 2 nuts and remove the both hoses.

Torque:

Suction hose 32 N·m (330 kgf·cm, 24 ft·lbf)

Discharge hose 22 N·m (225 kgf·cm, 16 ft·lbf)

HINT:

At the time of installation, please refer to the following item.

Lubricate 2 new O–rings with compressor oil and install them to the tubes.

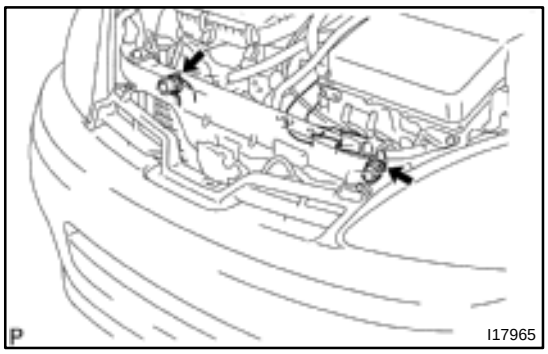

5. DISCONNECT RADIATOR HOSES FROM RADIATOR AND CONDENSER MODULE

(a) Using pliers, grip the claw of the hose clip and slide the clip along the hose.

(b) Disconnect the radiator hoses.

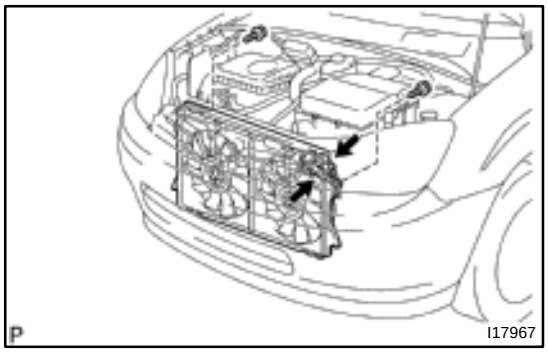

6. REMOVE ELECTRIC COOLING FAN ASSEMBLY

(a) Disconnect the 2 connectors.

(b) Remove the 2 bolts.

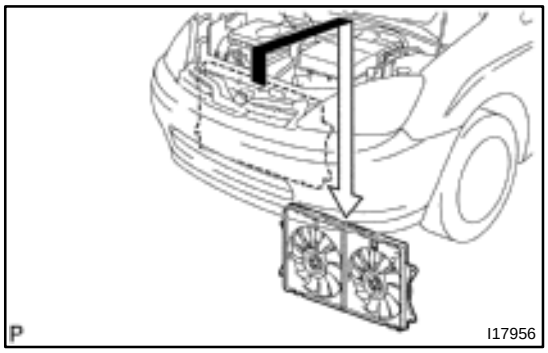

(c) Pull up the electric cooling fan assembly until the it is removed from the radiator and condenser module.

(d) Pull it downward to remove it.

COOLING FAN RELAY

CO14D–01

INSPECTION

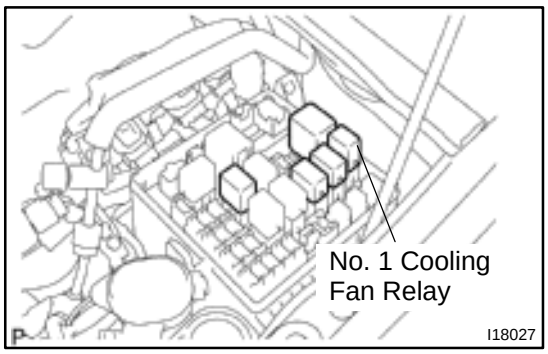

1. INSPECT NO. 1 COOLING FAN RELAY

(a) Remove the relay box cover.

(b) Remove the No. 1 cooling fan relay. (Marking: FAN NO. 1)

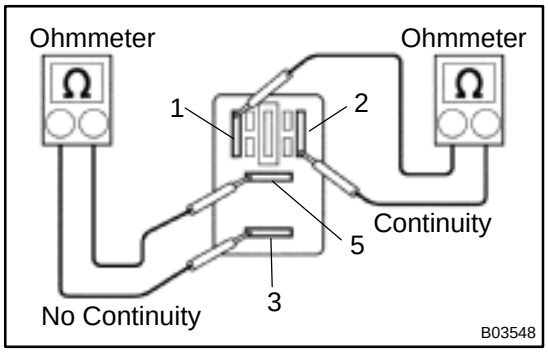

(c) Inspect the No. 1 cooling fan relay continuity.

(1) Using an ohmmeter, check that continuity exists between terminals 1 and 2.

If no continuity exists, replace the relay.

(2) Check that no continuity exists between terminals 3 and 5.

If continuity exists, replace the relay.

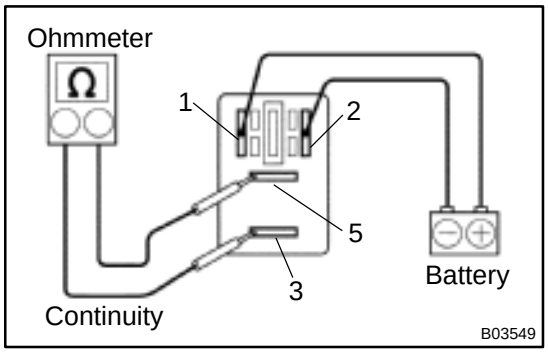

(d) Inspect the No. 1 cooling fan relay operation.

(1) Apply battery voltage across terminals 1 and 2.

(2) Using an ohmmeter, check that continuity exists between terminals 3 and 5.

If no continuity exists, replace the relay.

(e) Reinstall the No. 1 cooling fan relay.

(f) Reinstall the relay box cover.

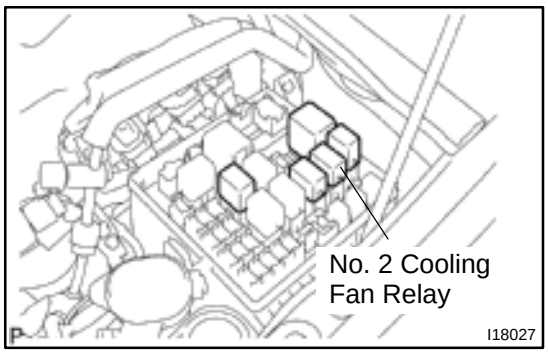

2. INSPECT NO. 2 COOLING FAN RELAY

(a) Remove the relay box cover.

(b) Remove the No. 2 cooling fan relay. (Marking: FAN NO. 2)

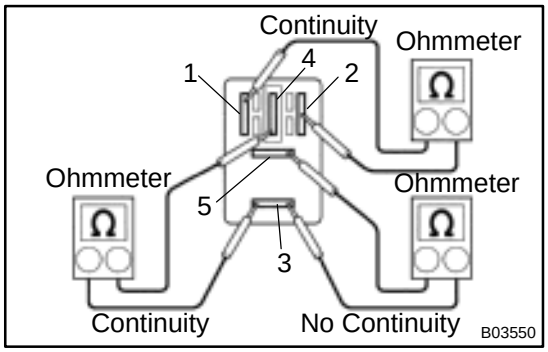

(c) Inspect the No. 2 cooling fan relay continuity.

(1) Using an ohmmeter, check that continuity exists between terminals 1 and 2.

If no continuity exists, replace the relay.

(2) Check that continuity exists between terminals 3 and 4.

If no continuity exists, replace the relay.

(3) Check that no continuity exists between terminals 3 and 5.

If continuity exists, replace the relay.

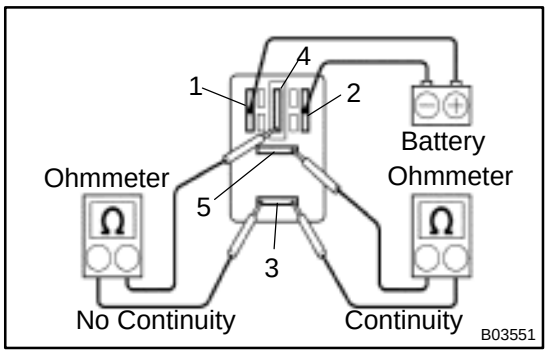

(d) Inspect the No. 2 cooling fan relay operation.
  (1) Apply battery voltage across terminals 1 and 2.
  (2) Using an ohmmeter, check that no continuity exists between terminals 3 and 4.

If continuity exists, replace the relay.

  (3) Using an ohmmeter, check that continuity exists between terminals 3 and 5.

If no continuity exists, replace the relay.

(e) Reinstall the No. 2 cooling fan relay.

(f) Reinstall the relay box cover.

3. INSPECT NO. 3 COOLING FAN RELAY

(a) Remove the relay box cover.

(b) Remove the No. 3 cooling fan relay. (Marking: Fan NO. 3)

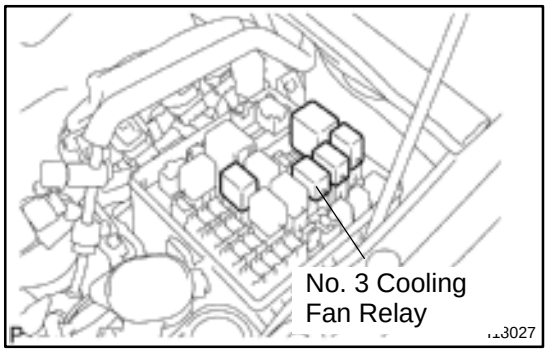

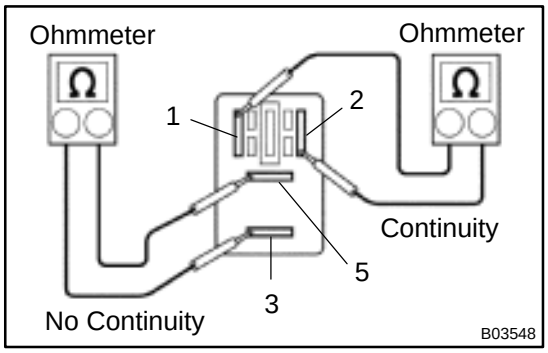

(c) Inspect the No. 3 cooling fan relay continuity.
  (1) Using an ohmmeter, check that continuity exists between terminals 1 and 2.

If no continuity exists, replace the relay.

  (2) Check that no continuity exists between terminals 3 and 5.

If continuity exists, replace the relay.

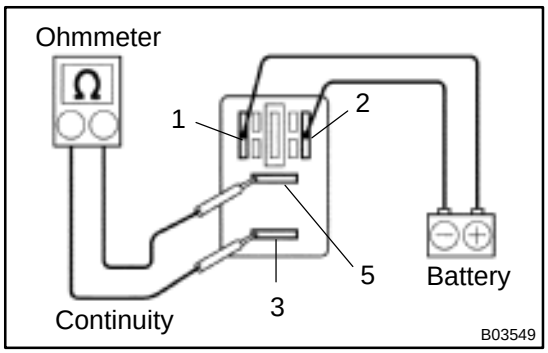

(d) Inspect the No. 3 cooling fan relay operation.
  (1) Apply battery voltage across terminals 1 and 2.
  (2) Using an ohmmeter, check that continuity exists between terminals 3 and 5.

If no continuity exists, replace the relay.

(e) Reinstall the No. 3 cooling fan relay.

(f) Reinstall the relay box cover.

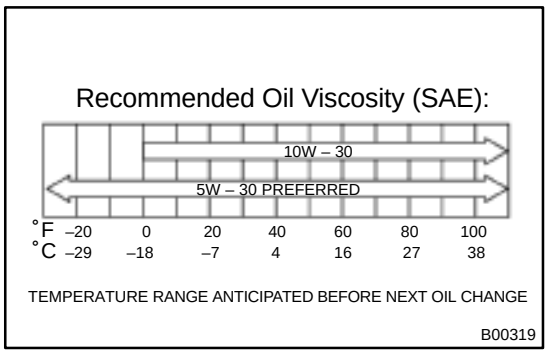

OIL AND FILTER

INSPECTION

LU02K–08

1. CHECK ENGINE OIL QUALITY

Check the oil for deterioration, entry of water, discoloring or thinning.

If the quality is visibly poor, replace the oil.

Oil grade:

API grade or SJ, Energy–Conserving or ILSAC multigrade engine oil is recommended. SAE 5W–30 is the best choice for your vehicle, for good fuel economy, and good starting in cold weather.

2. CHECK ENGINE OIL LEVEL

After warming up the engine and then 5 minutes after the engine stop, oil level should be between the ”L” and ”F” marks on the dipstick.

If low. check for leakage and add oil up to the ”F” mark.

NOTICE:

Do not fill with engine oil above the ”F” mark.

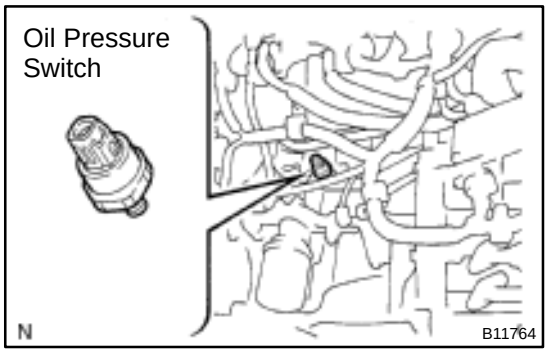

3. REMOVE OIL PRESSURE SWITCH, AND INSTALL OIL PRESSURE GAUGE

(a) Remove the oil pressure switch.

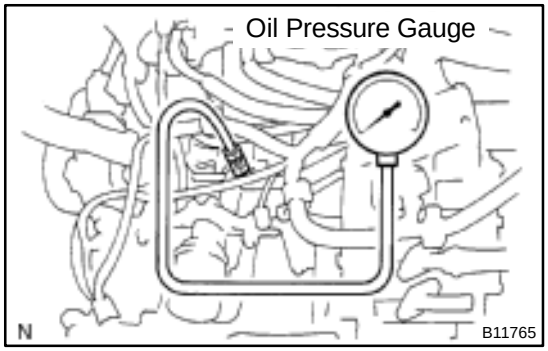

(b) Install the oil pressure gauge.

4. ACTIVATE INSPECTION MODE AND WARM UP ENGINE (See page IN–10)

Allow the engine to warm up to normal operating temperature.

5. CHECK OIL PRESSURE

Oil pressure:

At idle speed

29 kPa (0.3 kgf/cm^2, 4.3 psi) or more

At 2,250 rpm

150 – 550 kPa (1.5 – 5.6 kgf/cm^2, 22 – 80 psi)

6. REMOVE OIL PRESSURE GAUGE AND REINSTALL OIL PRESSURE SWITCH

(a) Remove the oil pressure gauge.

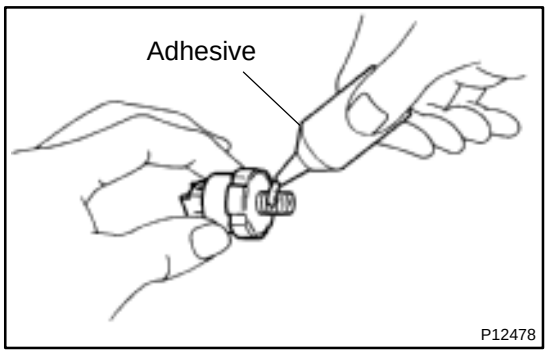

(b) Apply adhesive to 2 or 3 threads of the oil pressure switch.
Adhesive:
Part No. 08833–00080, THREE BOND 1344, LOCTITE 242 or equivalent

(c) Install the oil pressure switch.
Torque: 13 N·m (130 kgf·cm, 9 ft·lbf)

7. START ENGINE AND CHECK FOR LEAKS

OIL PUMP

COMPONENTS

LU02M–08

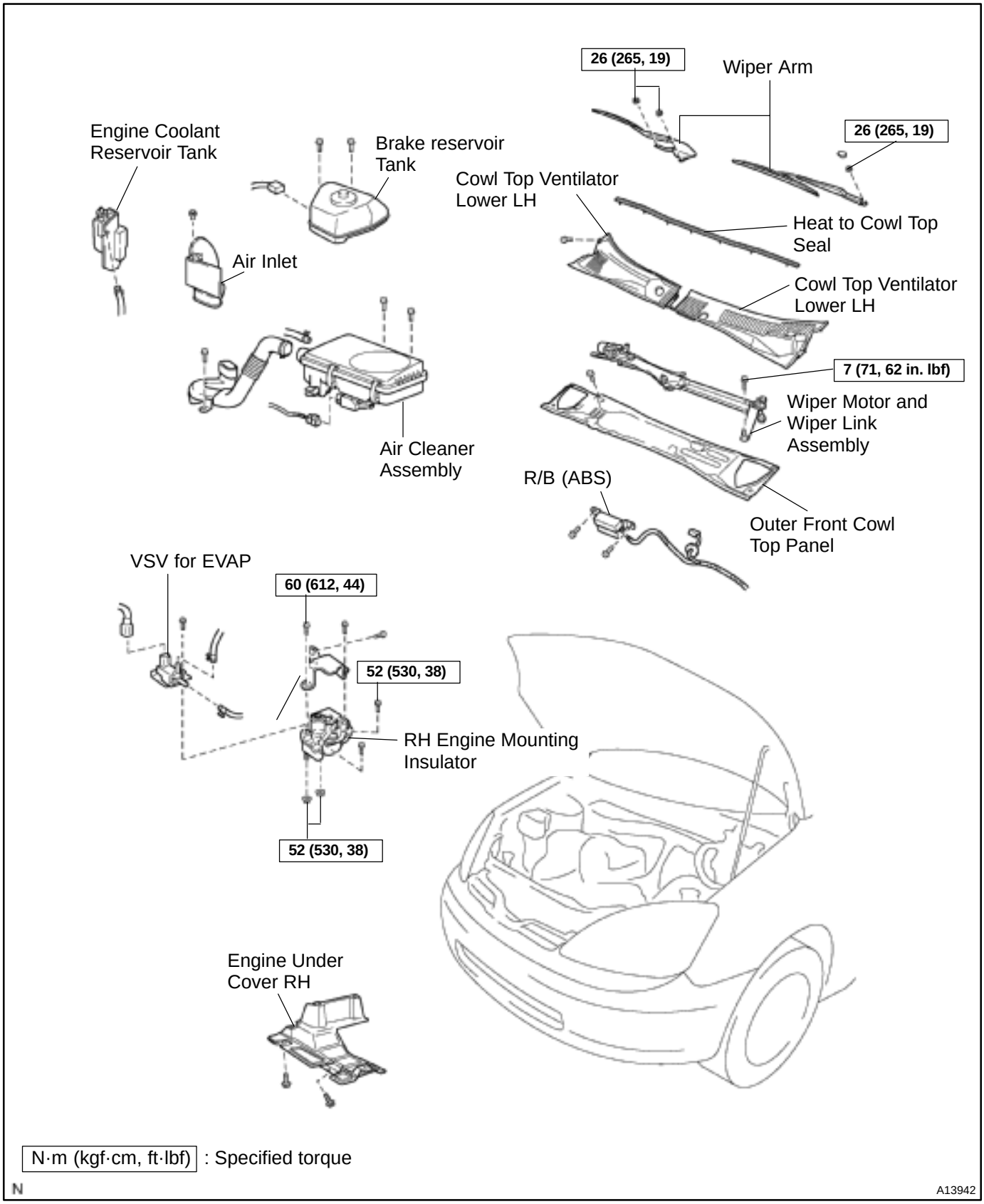

N·m (kgf·cm, ft·lbf) : Specified torque

N

A13942

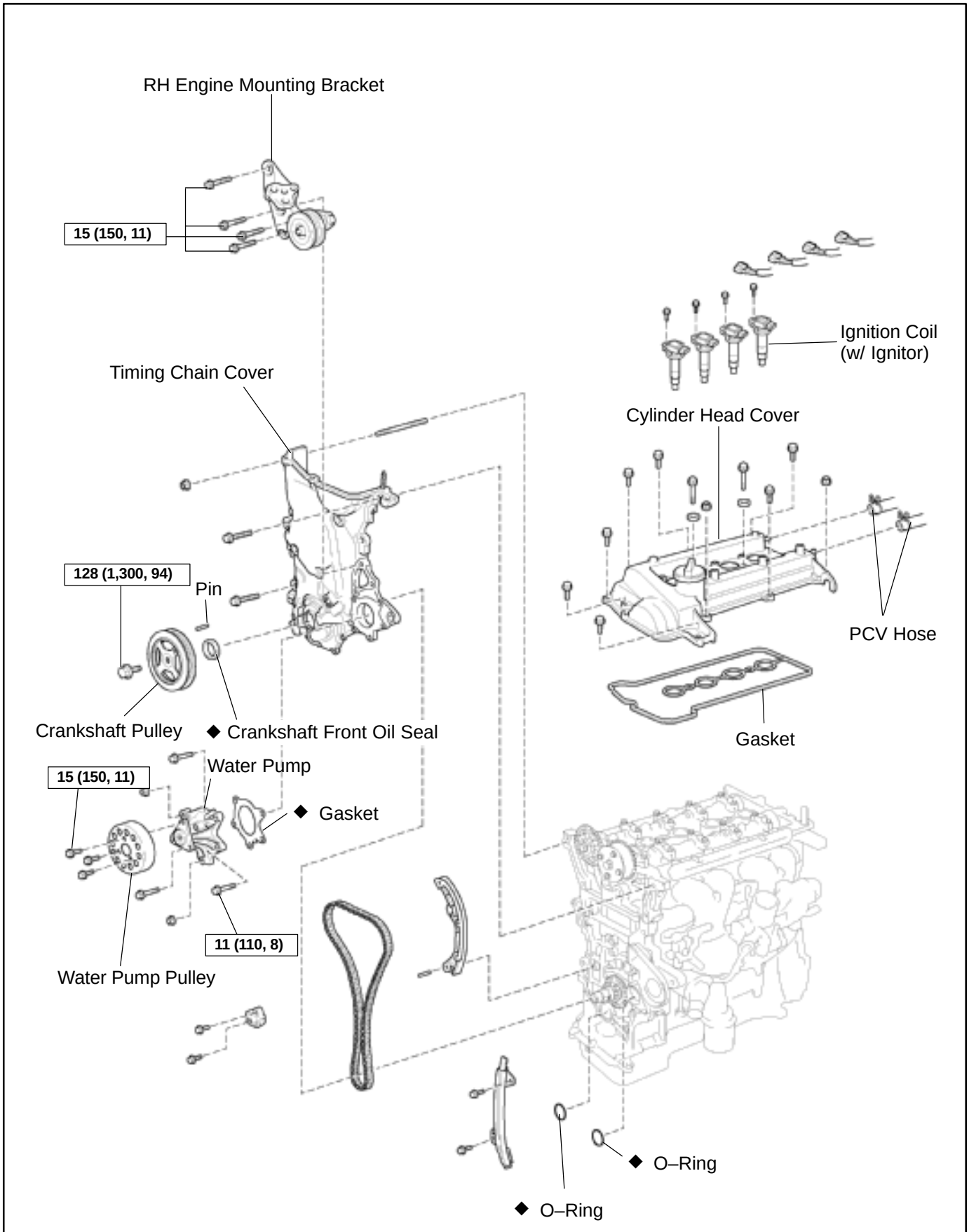

N·m (kgf·cm, ft·lbf) : Specified torque
◆ Non–reusable part

A13926

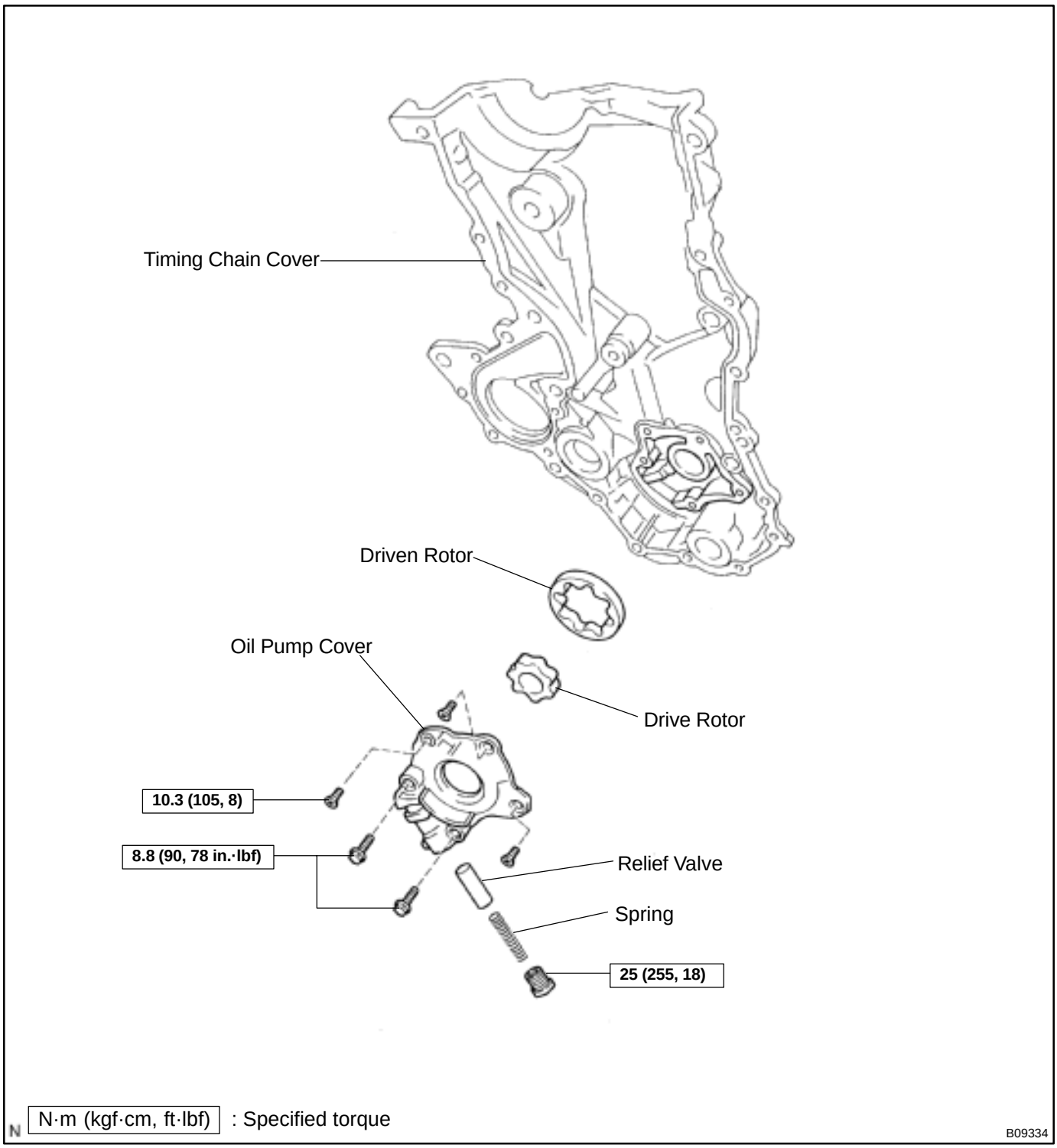
Timing Chain Cover
Driven Rotor
Oil Pump Cover
Drive Rotor
10.3 (105, 8)
8.8 (90, 78 in.·lbf)
Relief Valve
Spring
25 (255, 18)
N
N·m (kgf·cm, ft·lbf) : Specified torque
B09334

IGNITION SYSTEM

IG0EP–07

ON–VEHICLE INSPECTION

NOTICE:

"Cold" and "Hot" in these sentences express the temperature of the coils themselves. "Cold" is from –10˚C (14˚F) to 50˚C (122˚F) and "Hot" is from 50˚C (122˚F) to 100˚C (212˚F).

1. INSPECT IGNITION COIL (WITH IGNITER) AND SPARK TEST

Check that the spark occurs.

(1) Remove the ignition coils (with igniter) (See page IG–6).
(2) Using a 16 mm (0.63 in.) plug wrench, remove the spark plugs.
(3) Install the spark plugs to each ignition coils (with igniter), and connect the ignition coil connectors.
(4) Disconnect the 4 injector connectors.
(5) Ground the spark plugs.
(6) Check if spark occurs while engine is being cranked.

NOTICE:

To prevent gasoline from being injected from injectors during this test, crank the engine for no more than 5 – 10 seconds at time.

If the spark does not occur, do the test as follows:

SPARK TEST

NO

CHECK CONNECTION OF IGNITION COIL CONNECTOR → BAD → Connect securely.

OK

CHANGE IT TO NORMAL IGNITION COIL (WITH IGNITER) AND PERFORM SPARK TEST AGAIN → OK → Replace the ignition coil (with igniter).

NO

CHECK POWER SUPPLY TO IGNITION COIL (WITH IGNITER)
1. Turn ignition switch to ON.
2. Check that there is battery voltage at ignition coil positive (+) terminal.

→ BAD → Check wiring between ignition switch to ignition coil (with igniter).

OK

CHECK RESISTANCE OF CAMSHAFT POSITION SENSOR (See step 3)

	Cold	Hot
Resistance:	1,630 – 2,740 Ω	2,065 – 3.225 Ω

→ BAD → Replace the camshaft position sensor.

OK

CHECK RESISTANCE OF CRANKSHAFT POSITION SENSOR (See step 4)

	Cold	Hot
Resistance:	985 – 1,600 Ω	1,265 – 1,890 Ω

→ BAD → Replace the crankshaft position sensor.

OK

CHECK IGT SIGNAL FROM ECM (See page DI–115) → BAD → Check wiring between ECM and ignition coil (with igniter), and then try another ECM.

OK

TRY ANOTHER IGNITION COIL (WITH IGNITER)

(7) Using a 16 mm (0.63 in.) plug wrench, install the spark plugs.

Torque: 18 N·m (184 kgf·cm, 13 ft·lbf)

(8) Install the ignition coils (with igniter) (See page IG–7).

2. INSPECT SPARK PLUGS

(a) Remove the ignition coils (with igniter) (See page IG–6).

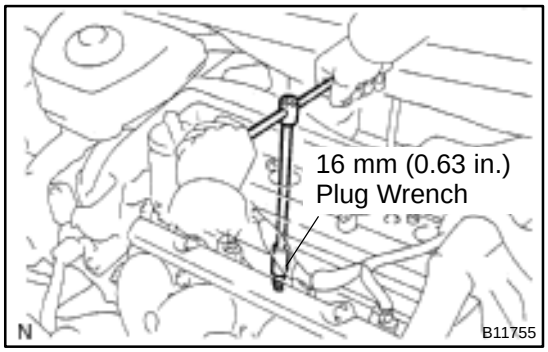

(b) Using a 16 mm (0.63 in.) plug wrench, remove the spark plugs.

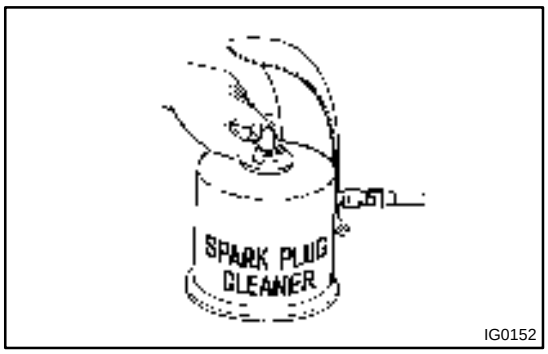

(c) Clean the spark plugs.

If the electrode has traces of wet carbon, allow it to dry and then clean with a spark plug cleaner.

Air pressure: Below 588 kPa (6 kgf/cm^2, 85 psi)

Duration: 20 seconds or less

HINT:

If there are traces of oil, remove it with gasoline before using the spark plug cleaner.

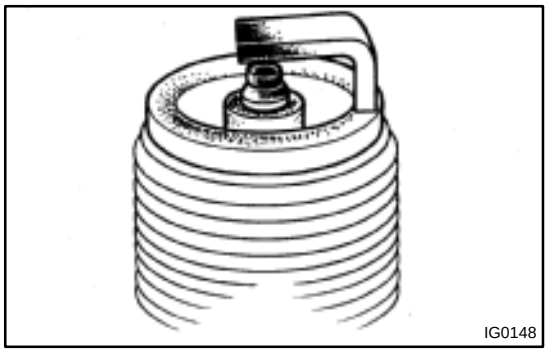

(d) Check the spark plug for thread damage and insulator damage.

If abnormal, replace the spark plug.

Recommended spark plug:

DENSO made	SK16R11
NGK made	IFR5A11

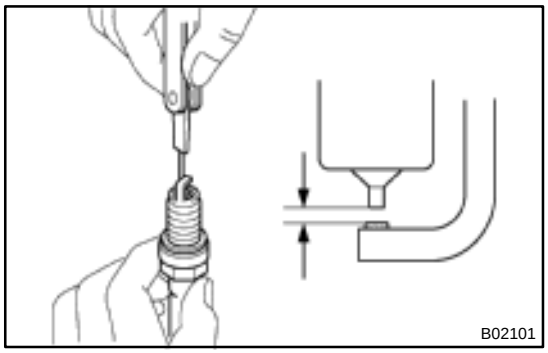

(e) Check the electrode gap.

Electrode gap: 1.0 – 1.1 mm (0.039 – 0.043 in.)

Maximum electrode gap: 1.2 mm (0.047 in.)

If the electrode gap is greater than maximum, replace the spark plug.

(f) Using a 16 mm (0.63 in.) plug wrench, install the spark plugs.

Torque: 18 N·m (184 kgf·cm, 13 ft·lbf)

(g) Install the ignition coils (with igniter) (See page IG–7).

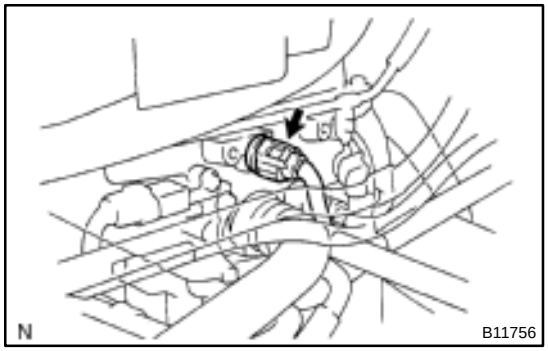

3. INSPECT CAMSHAFT POSITION SENSOR

(a) Disconnect the camshaft position sensor connector.

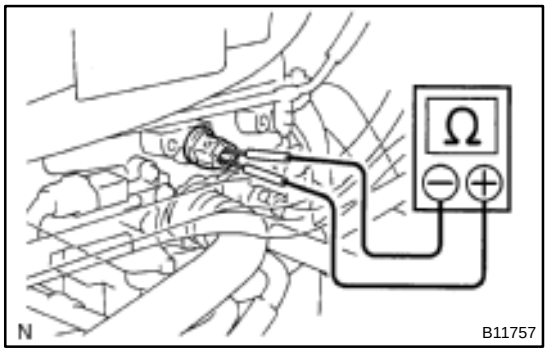

(b) Using an ohmmeter, measure the resistance between terminals.

Resistance:

Cold	1,630 – 2,740 Ω
Hot	2,065 – 3,225 Ω

If the resistance is not as specified, replace the camshaft position sensor.

(c) Connect the camshaft position sensor connector.

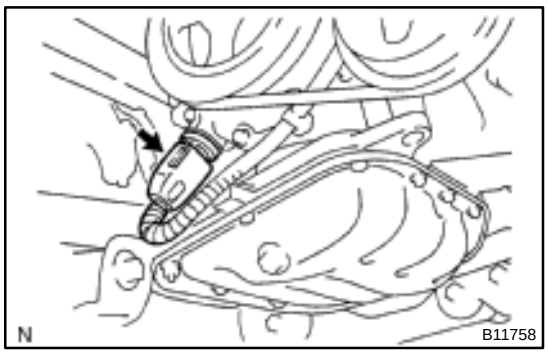

4. INSPECT CRANKSHAFT POSITION SENSOR

(a) Remove the engine under cover RH.

(b) While sliding the connector lock, remove the connector.

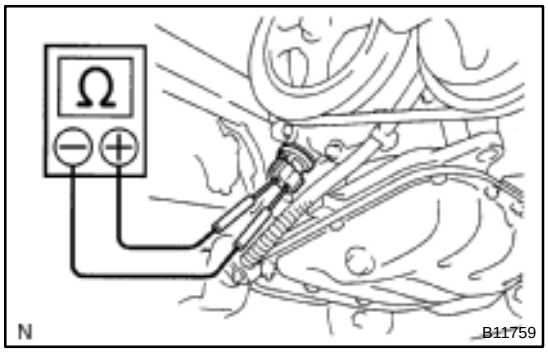

(c) Using an ohmmeter, measure the resistance between the terminals.

Resistance:

Cold	985 – 1,600 Ω
Hot	1,265 – 1,890 Ω

If the resistance is not as specified, replace the crankshaft position sensor.

(d) Install the connector.

(e) Install the engine under cover RH.

HV BATTERY

COMPONENTS

HV002–01

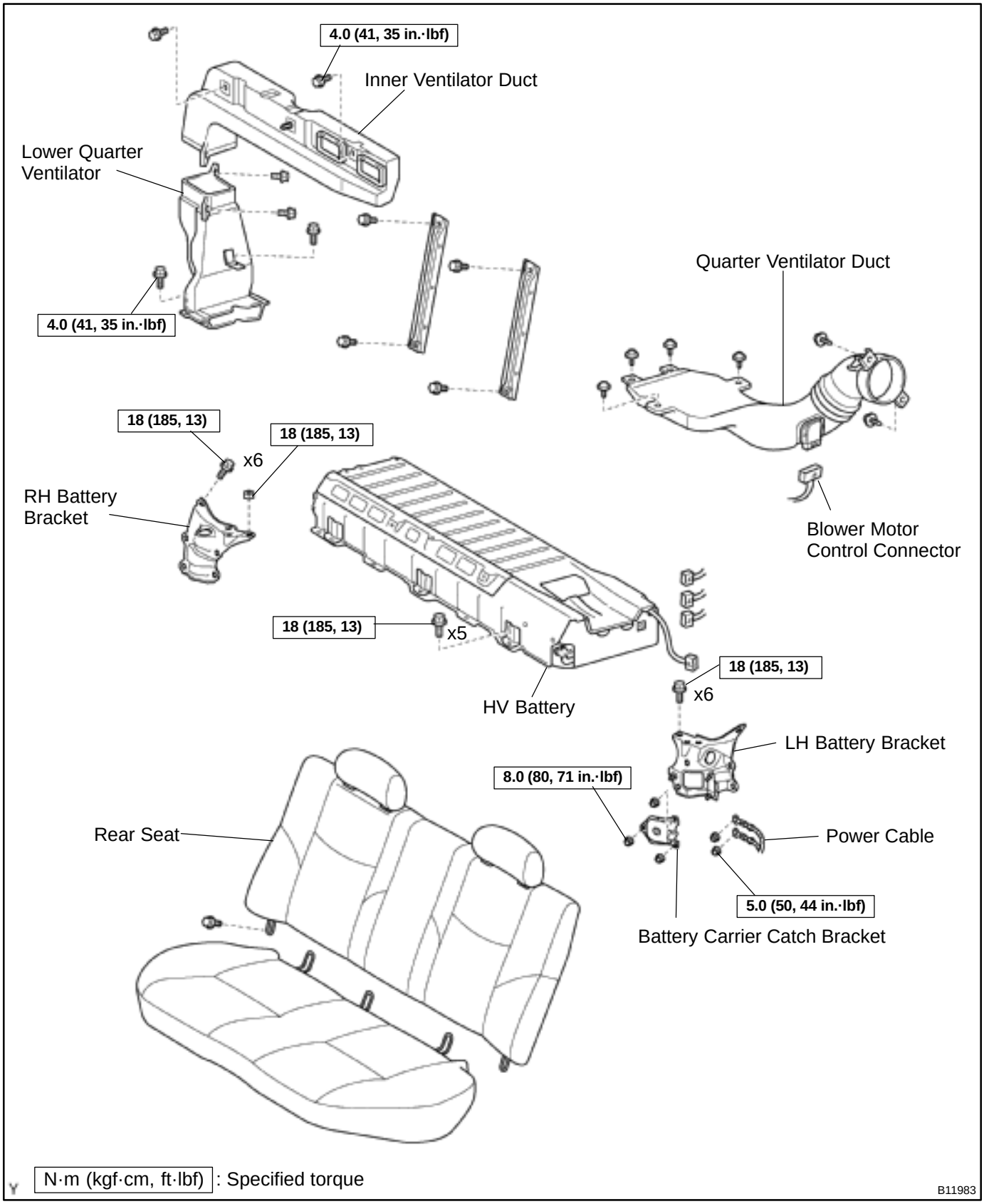

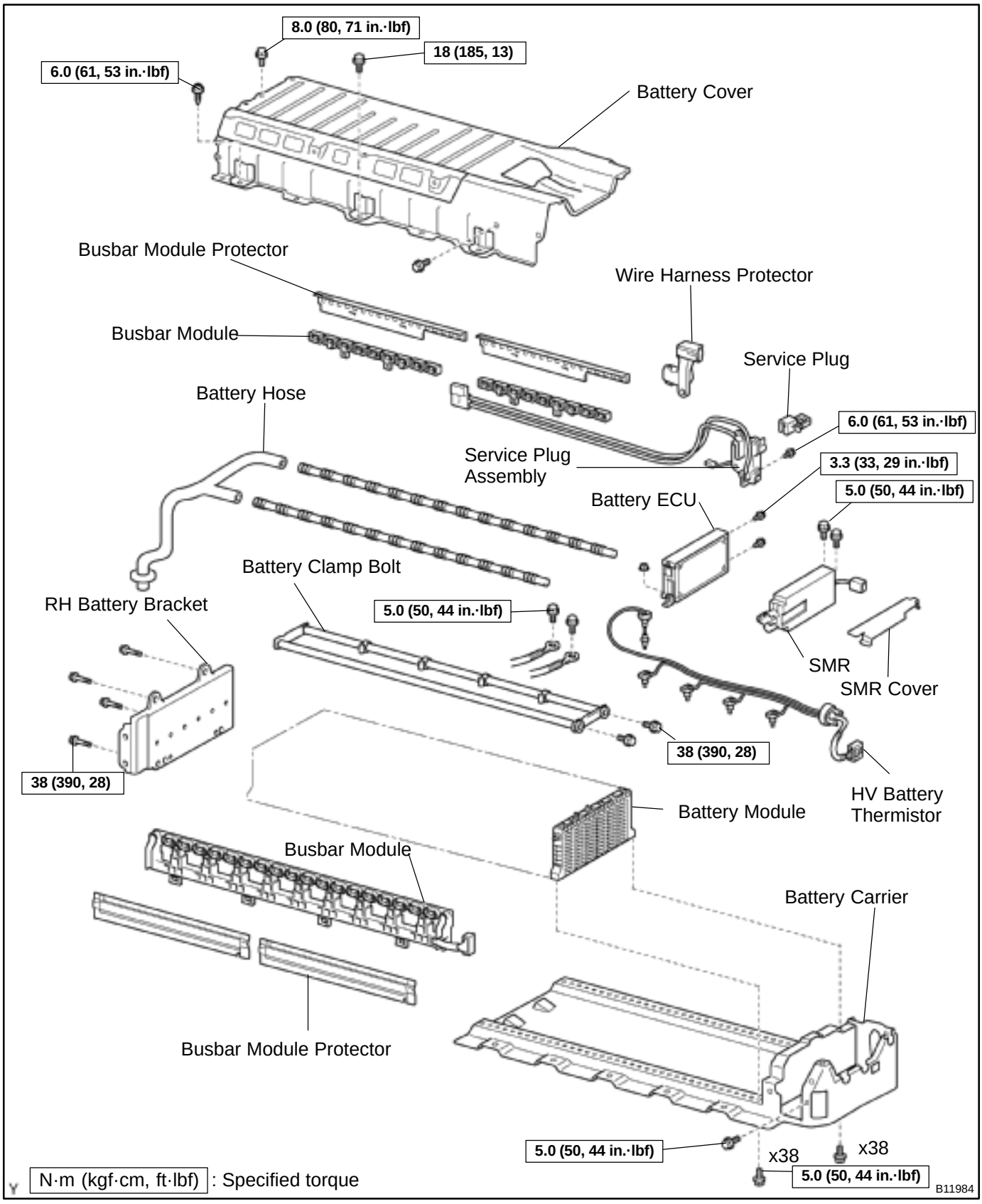
8.0 (80, 71 in.·lbf)
18 (185, 13)
6.0 (61, 53 in.·lbf)
Battery Cover
Busbar Module Protector
Wire Harness Protector
Busbar Module
Service Plug
Battery Hose
6.0 (61, 53 in.·lbf)
Service Plug Assembly
3.3 (33, 29 in.·lbf)
5.0 (50, 44 in.·lbf)
Battery ECU
Battery Clamp Bolt
RH Battery Bracket
5.0 (50, 44 in.·lbf)
SMR
SMR Cover
38 (390, 28)
38 (390, 28)
HV Battery Thermistor
Battery Module
Busbar Module
Battery Carrier
Busbar Module Protector
5.0 (50, 44 in.·lbf)
x38
x38
5.0 (50, 44 in.·lbf)
N·m (kgf·cm, ft·lbf) : Specified torque
B11984

HV004–01

DISASSEMBLY

1. REMOVE BATTERY MODULE SET BOLT

Turn the battery assembly upside down, remove the 76 battery module bolts.

NOTICE:

When turning it over, prevent the flange from being deformed.

HINT:

When not removing a battery module, skip the operation of step 1.

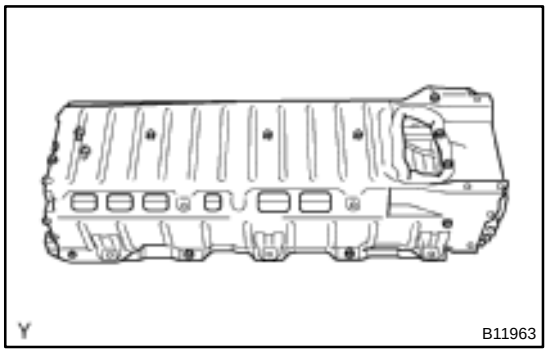

2. REMOVE BATTERY COVER

Remove the 12 bolts, screw and battery cover.

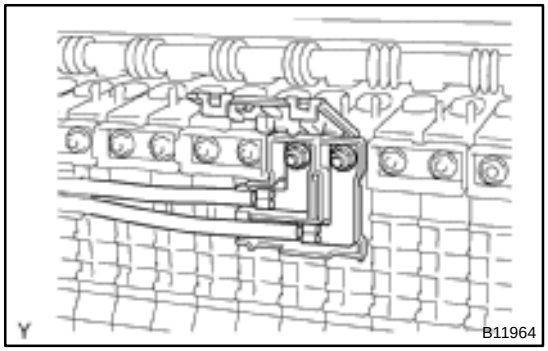

3. REMOVE SERVICE PLUG

(a) Remove the rear RH and LH busbar module protectors.

(b) Remove the 2 nuts for busbar module.

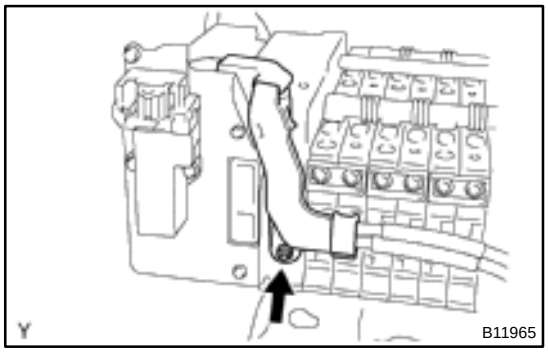

(c) Remove the nut and wire harness protector.

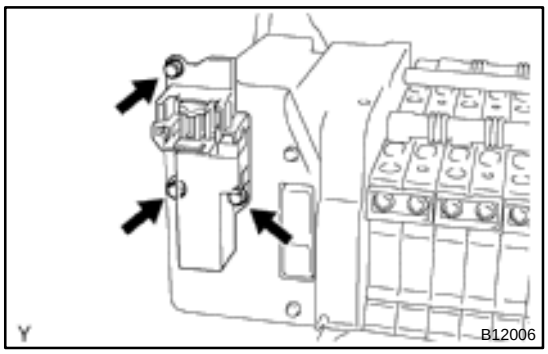

(d) Remove the 3 bolts and service plug assembly.

4. REMOVE POWER CABLE FOR SMR

(a) Remove the front RH and LH busbar module protectors.

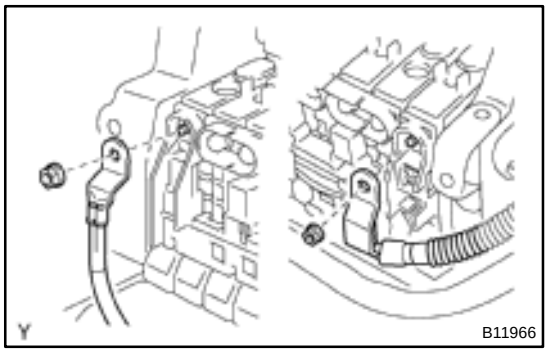

(b) Remove the 2 nuts, and disconnect the power cable from the front busbar module.

(c) Remove the SMR cover from the SMR.

(d) Remove 2 bolts, and disconnect the power cable for SMR.

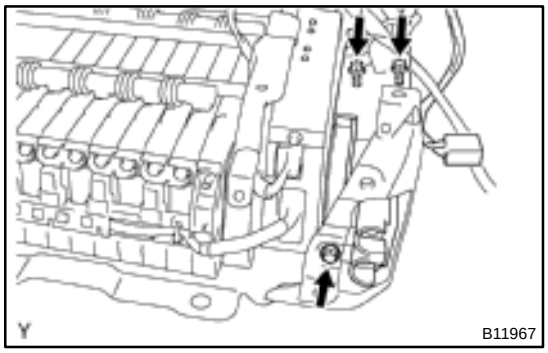

5. REMOVE SMR

(a) Using the service plug, turn the interlock counterclockwise to unlock.

NOTICE:

When the interlock is damaged, be sure to replace it with new one.

(b) Remove the 3 bolts and SMR.

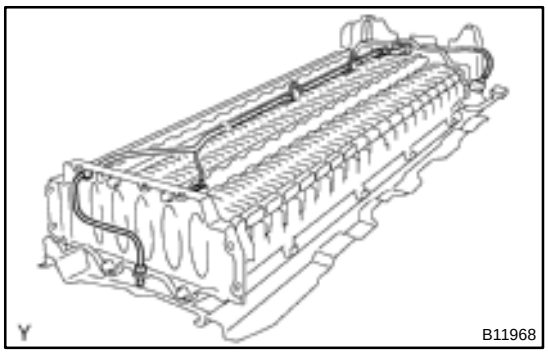

6. REMOVE HV BATTERY THERMISTOR

7. REMOVE BATTERY ECU

(a) Disconnect the connector.

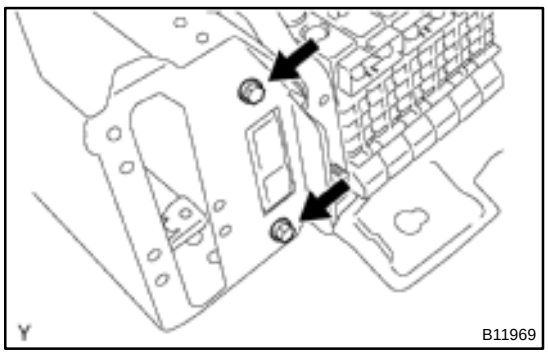

(b) Remove the 2 bolts and battery ECU.

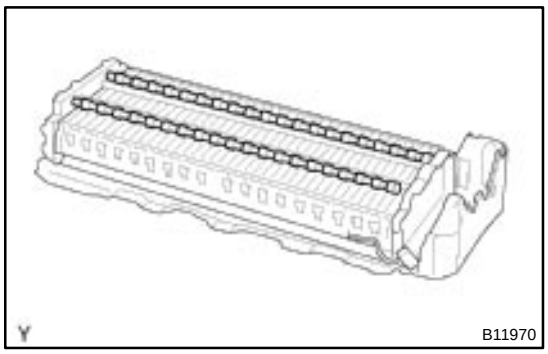

8. REMOVE BATTERY HOSE

9. REMOVE BUSBAR MODULE

(a) Remove the 36 nuts, RH and LH rear busbar modules.

(b) Remove the 36 nuts, RH and LH front busbar modules.

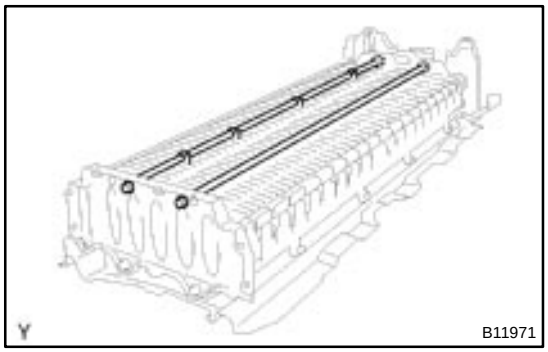

10. REMOVE BATTERY CLAMP BOLT

Remove the 4 bolts and battery clamp bolt.

CAUTION:

Never remove the battery clamp bolt until 4 hours has passed after the ignition switch is turned OFF. An explosion due to expansion could occur.

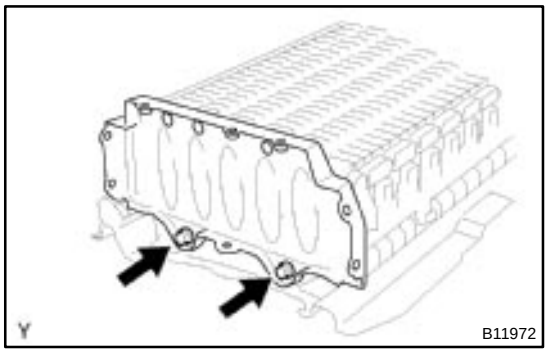

11. REMOVE RH BATTERY BRACKET

Remove the 2 bolts and RH battery bracket.

CAUTION:

Never remove the RH battery bracket until 4 hours has passed after the ignition switch is turned OFF. An explosion due to expansion could occur.

12. REMOVE 38 HV BATTERY MODULES

HV006–01

REASSEMBLY

1. INSTALL BATTERY MODULE

Install the 38 battery modules to the battery carrier.

HINT:

- Packs containing 2 battery module each are arranged in the order of 1 to 19 from the ECU side.
- Starting from the positive terminal of the battery module on the battery ECU side, install 38 battery modules by alternately connecting the positive and negative terminals to the vehicle front side.

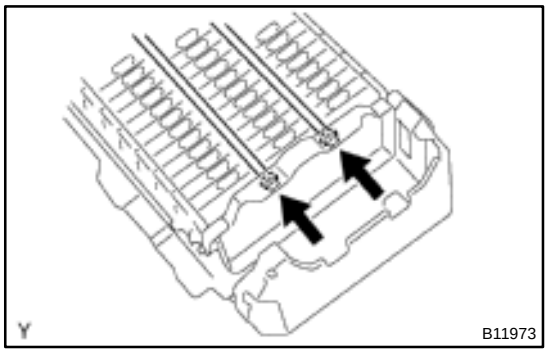

2. INSTALL BATTERY CLAMP BOLT

Install the battery clamp bolt with the 2 bolts.

Torque: 23 N·m (230 kgf·cm, 16 ft·lbf)

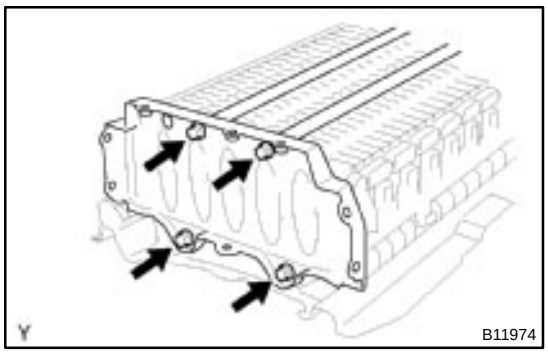

3. INSTALL RH BATTERY BRACKET

Install the RH battery bracket with the 4 bolts.

Torque: 23 N·m (230 kgf·cm, 16 ft·lbf)

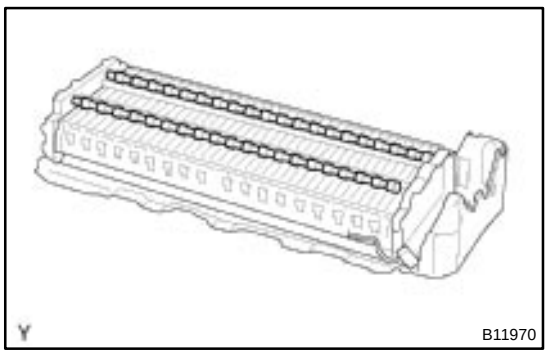

4. INSTALL BATTERY HOSE

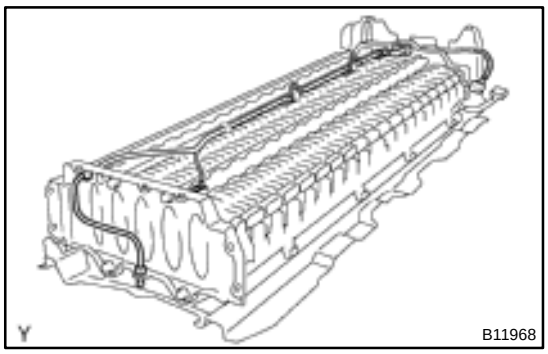

5. INSTALL HV BATTERY THERMISTOR

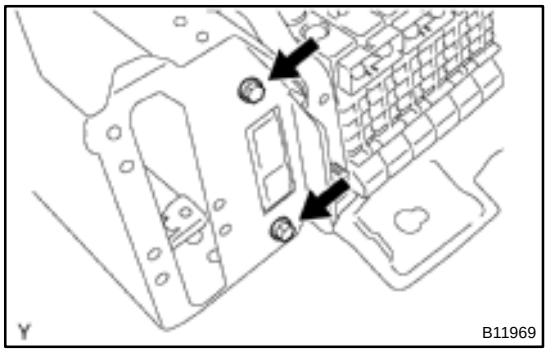

6. INSTALL BATTERY ECU

(a) Install the battery ECU with the 2 bolts.
Torque: 3.3 N·m (33 kgf·cm, 29 in.·lbf)

(b) Connect the connector for HV battery thermistor.

7. INSTALL BUSBAR MODULE

(a) Install the front busbar module with the 74 nuts.
Torque: 6.0 N·m (61 kgf·cm, 53 in.·lbf)

(b) Install the rear RH and LH busbar modules with the 74 nuts.
Torque: 6.0 N·m (61 kgf·cm, 53 in.·lbf)

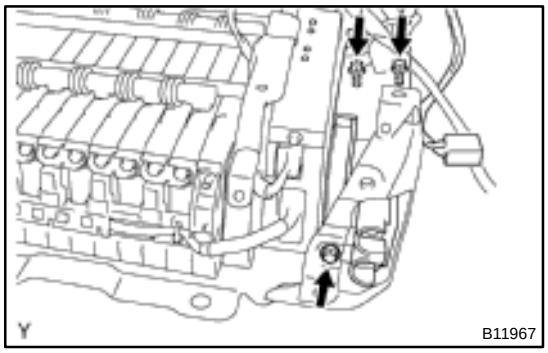

8. INSTALL SMR

(a) Install the SMR with the 3 bolts.
Torque: 5.0 N·m (50 kgf·cm, 44 in.·lbf)

(b) Connect the power cable for SMR with the 2 bolts.
Torque: 5.0 N·m (50 kgf·cm, 44 in.·lbf)

(c) Install the SMR cover to the SMR.

(d) Connect the connector to the cover for external uniform charger and lock the cover.

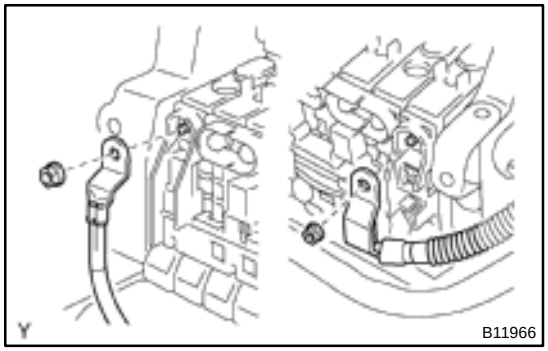

(e) Connect the power cable for SMR with the 2 nuts.
Torque: 6.0 N·m (61 kgf·cm, 53 in.·lbf)

(f) Install the front RH and LH busbar module protectors.

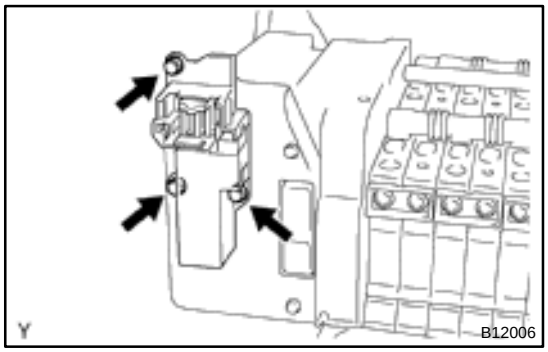

9. INSTALL SERVICE PLUG

(a) Install the service plug with the 3 bolts.
Torque: 6.0 N·m (61 kgf·cm, 53 in.·lbf)

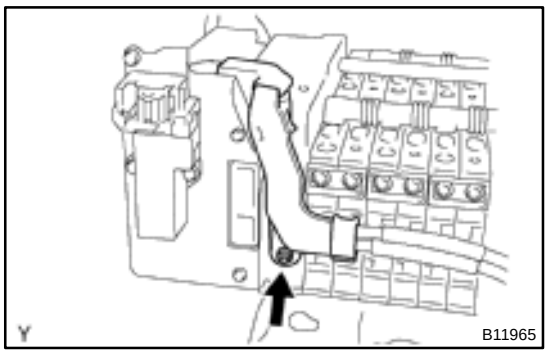

(b) Install the wire harness protector with the nut.

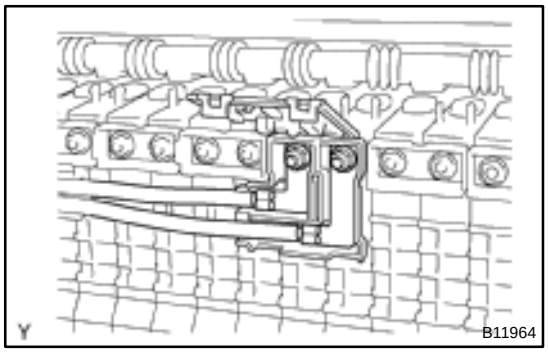

(c) Install the busbar module with 2 new nuts.
Torque: 5.4 N·m (55 kgf·cm, 48 in.·lbf)

10. INSTALL REAR RH AND LH BUSBAR MODULE PROTECTOR

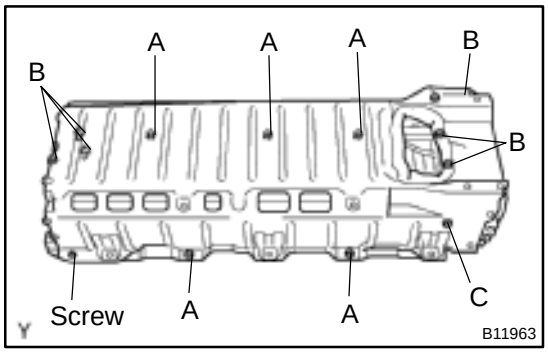

11. INSTALL BATTERY COVER

Install the battery cover with the 12 bolts and screw.

Torque:
Bolt A: 18 N·m (185 kgf·cm, 13 ft·lbf)
Bolt B: 8.0 N·m (80 kgf·cm, 71 in.·lbf)
Bolt C: 7.0 N·m (70 kgf·cm, 62 in.·lbf)
Screw: 6.0 N·m (61 kgf·cm, 53 in.·lbf)

12. INSTALL BATTERY MODULE SET BOLT

Turn the battery assembly upside down, install the 76 battery module set bolts.

Torque: 4.0 N·m (40 kgf·cm, 35 in.·lbf)

HV007–01

INSTALLATION

1. INSTALL HV BATTERY

(a) Set the HV battery to the body.

(b) Connect the battery hose to the body.

CAUTION:

Since alkaline electrolyte may be got on the hose end, carry out the operation with considera care.

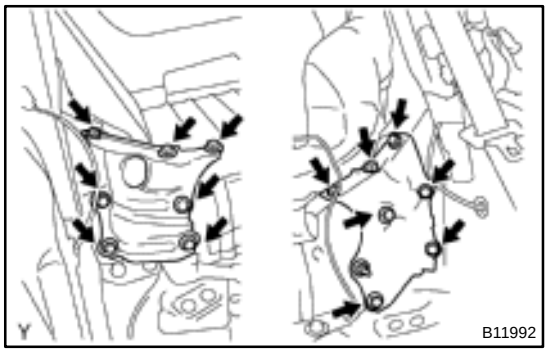

2. INSTALL BATTERY BRACKET

(a) Install the RH and LH battery bracket with the 13 bolts and nut.

Torque: 18 N·m (185 kgf·cm, 13 ft·lbf)

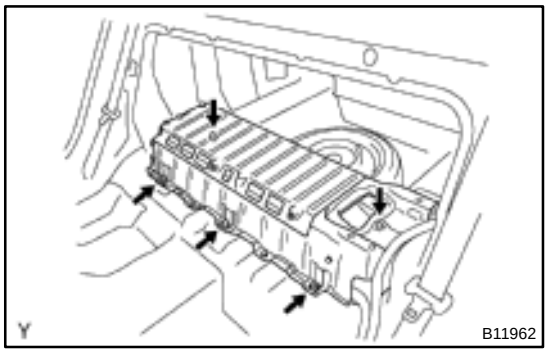

(b) Install and tighten the 5 bolts for HV battery.

Torque: 18 N·m (185 kgf·cm, 13 ft·lbf)

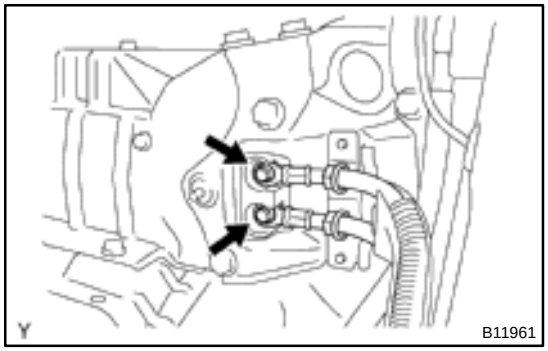

3. INSTALL HIGH TENSION CABLE

(a) Install the earth terminal.

(b) Install the high tension cable with the 2 bolts.

Torque: 5.0 N·m (50 kgf·cm, 44 in.·lbf)

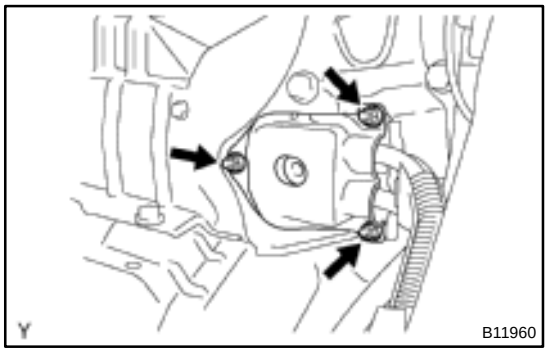

(c) Install the battery carrier catch bracket with the 3 nuts.

Torque: 8.0 N·m (80 kgf·cm, 71 in.·lbf)

NOTICE:

When installing a cover, never fail to pass the interlock button.

4. INSTALL DUCT (See page HV–32)

5. CONNECT CONNECTOR

(a) Connect the 2 connectors to the battery ECU.

(b) Connect the connector to the SMR.

(c) Connect the connector to the service plug assembly.

6. **INSTALL REAR SET (See page BO–82)**
7. **INSTALL LUGGAGE TRIM (See page BO–25)**
8. **INSTALL SERVICE PLUG (See page HV–1)**

CONVERTER AND INVERTER ASSEMBLY

HV008–02

ON–VEHICLE INSPECTION

1. INSPECT INVERTER

(a) Turn the IG switch OFF and disconnect the 4 connectors.

(b) Apply battery positive voltage to connector B terminal 5 (IGCT) on the inverter side through a fuse, and battery negative voltage to connector B terminal 6 (GND).

(c) Measure the voltage and resistance between each terminal shown below and ground.

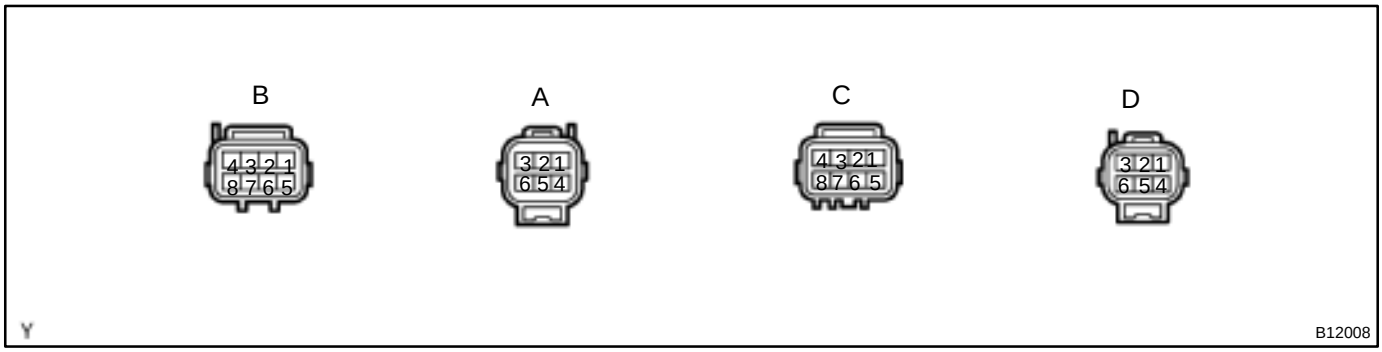

Terminal	Measuring Condition	Specification
A, 5 (G – INVT) D, 5 (M–INVT)	–	Approx. 2 – 4.5 V
C, 5 (VB)	–	Approx. 0.5 – 4 V
A, 4 (G – SDOWN) D, 4 (M – SDOWN)	Apply battery positive voltage to terminal through the resistance of 1 kΩ.	Approx. 5 – 6 V
B, 8 (G – FINV) C, 8 (M – FINV) B, 7 (G – SINV) C, 7 (M – SINV)	Connect the terminal to connector B terminal 6 through the resistance of 10 kΩ.	7 – 12 V approx. 0.2 sec.
A, 1 (G – UU) A, 2 (G – VU) A, 3 (G – WU) D, 1 (M – UU) D, 2 (M – VU) D, 3 (M – WU)	Connect the terminal to connector B terminal 6 through the resistance of 1 kΩ.	Approx. 6 – 8 V
B, 1 (G – IVA) B, 2 (G – IWA) B, 3 (G – IVB) B, 4 (G – IWB) C, 1 (M – IVA) C, 2 (M – IWA) C, 3 (M – IVB) C, 4 (M – IWB)	–	Approx. 0 V
B, 6 (GND) A, 6 (G – GINV) D, 6 (M – GINV)	–	Continuity
C, 6 (CVRSW)	Install a cover for the connecting part of the power cable for the MG1 and MG2.	Continuity

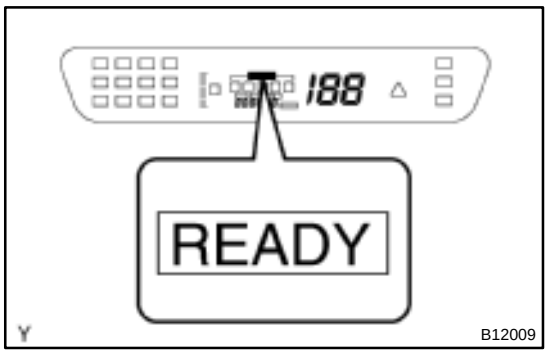

2. INSPECT CONVERTER

(a) Function check

Measure the voltage of an auxiliary battery terminal when the "READY" lamp is OFF and ON.

READY lamp is OFF: Approx. 12 V

READY lamp is ON: Approx. 14 V

(b) Output current check

(1) Disconnect the MG2 power cable from the inverter (See page HV–18).

(2) Install AC/DC 400 A probe to the wire harness of the IP connector of the converter.

(3) Connect the MG2 power cable to the inverter (See page HV–22).

(4) With the READY lamp ON, operate electric devices one by one and measure the output current.

Standard: 100 A or less

HINT:

If more than 100 A is shown momentarily, check for the followings.

- Ground short of electric device.
- Overload caused by installation of excessive device.
- PTC heater operation.

HV009–01

COMPONENTS

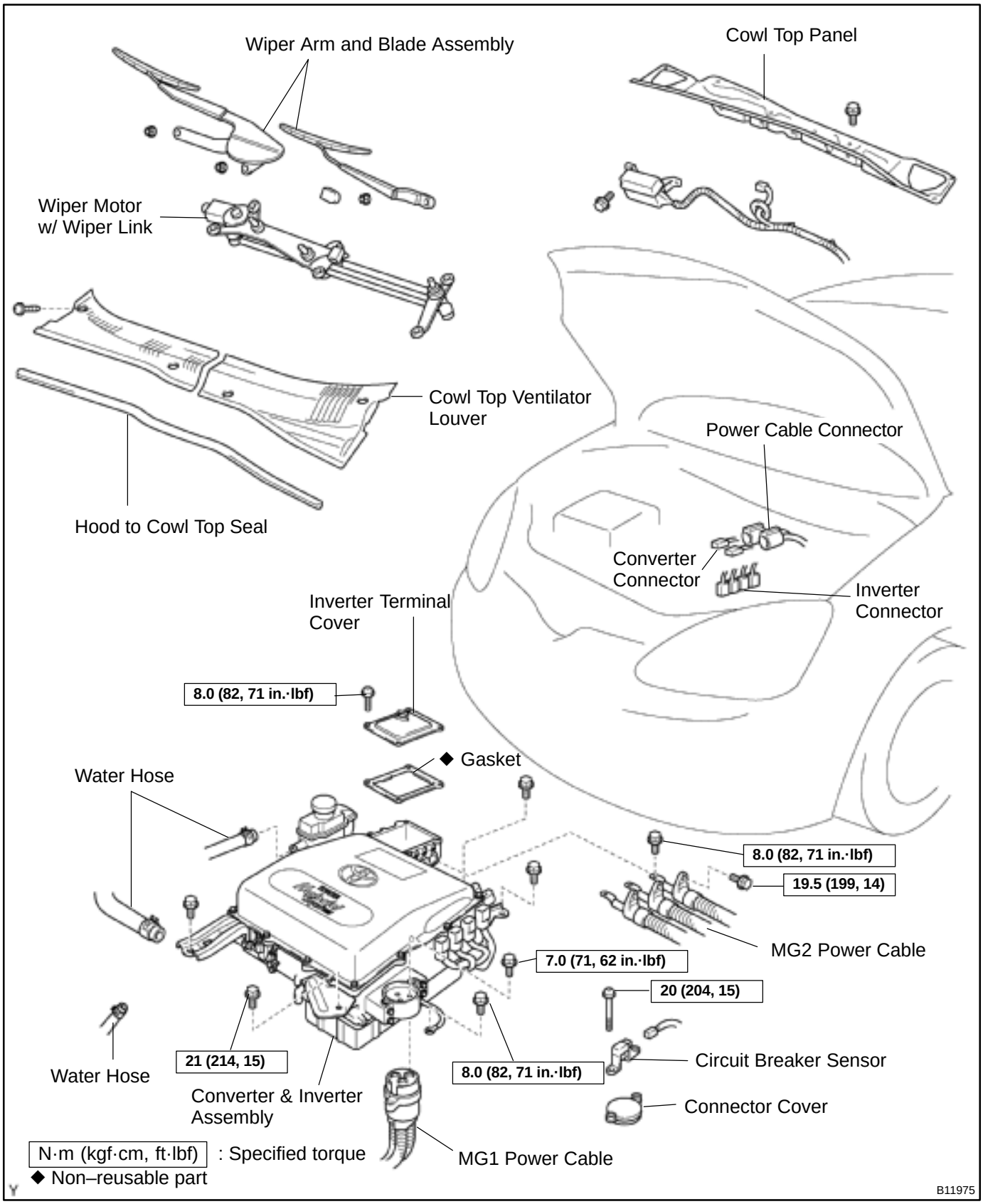

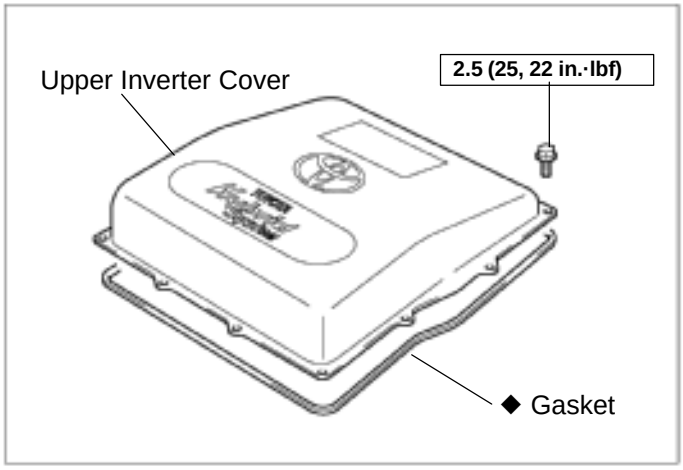

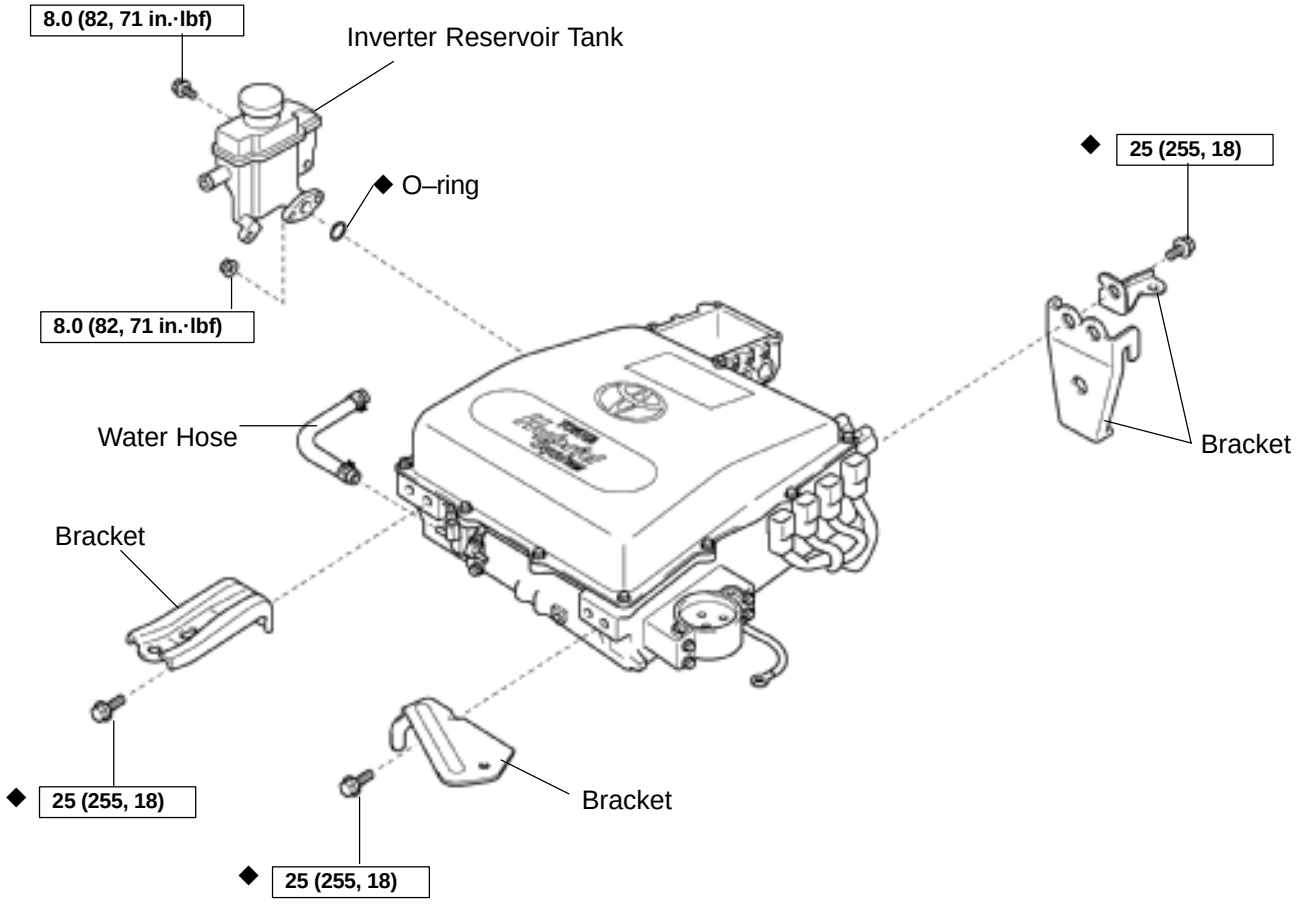

N·m (kgf·cm, ft·lbf) : Specified torque
◆ Non–reusable part

B11976

HV00A–01

REMOVAL

1. REMOVE SERVICE PLUG (See page HV–1)
2. DRAIN HV COOLANT (See page HT–6)
3. REMOVE COWL TOP PANEL (See page BO–31)

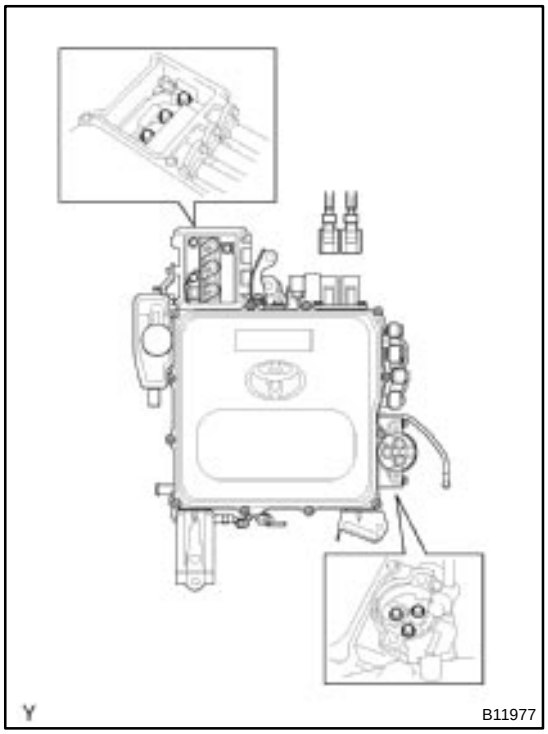

4. VERIFY 0 V

NOTICE:

- **Before starting step (a), 5 minutes or more should be passed after removing the service plug.**
- **Be careful to prevent foreign matter from entering the inside of connector cover.**

(a) Disconnect the connector of the battery power cable and insulate it with packaging tape.

(b) Using a torx socket wrench (T30), remove the 4 screws and inverter terminal cover.

(c) Using a torx socket wrench (T40), remove the 2 screws, circuit breaker sensor and connector cover.

HINT:

Slide the connector cover to disconnect the circuit breaker sensor connector.

(d) Using a voltmeter, measure the voltage between terminals of 3 phases (U–V, V–W, U–W) and each terminal and body ground to verify them to be approx. 0 V.

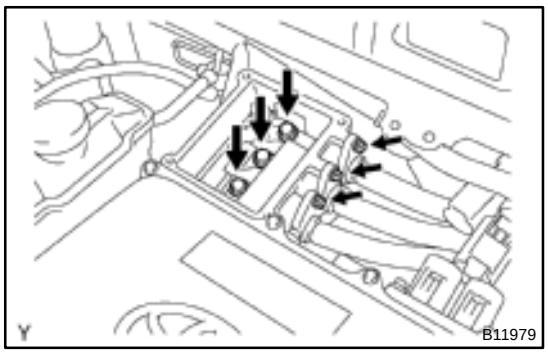

5. REMOVE CONVERTER & INVERTER ASSEMBLY

(a) Remove the 6 bolts and 3 power cables for MG2.

NOTICE:

Be careful to prevent foreign matter from entering the inside of connector cover.

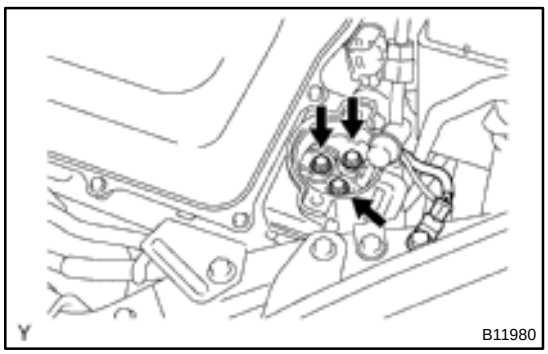

(b) Remove the 3 bolts and power cable for MG1.

NOTICE:

- **Remove the power cable for MG1 together with converter & inverter assembly.**
- **Be careful to prevent foreign matter from entering the inside of connector cover.**

(c) Remove the bolt and ground cable.

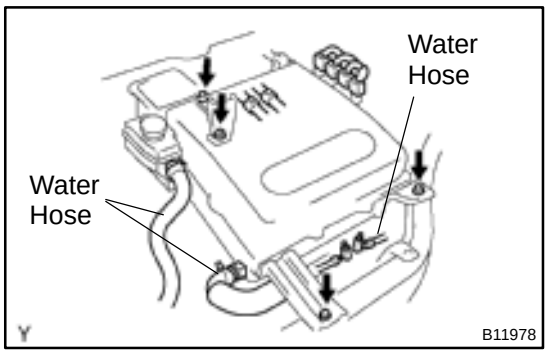

(d) Disconnect the 3 water hoses from the converter & inverter assembly.

(e) Remove the 4 bolts and converter & inverter assembly.

HV00D–01

INSTALLATION

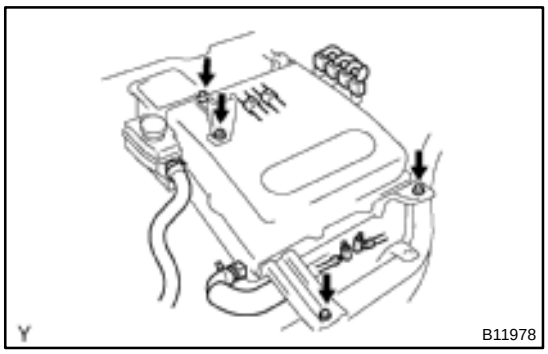

1. INSTALL CONVERTER & INVERTER ASSEMBLY

(a) Install the converter & inverter assembly with the 4 bolts.
Torque: 21 N·m (214 kgf·cm, 15 ft·lbf)

(b) Connect the 3 water hoses to the converter & inverter assembly.

(c) Connect the 4 connectors.

(d) Connect the 2 power cable connectors.

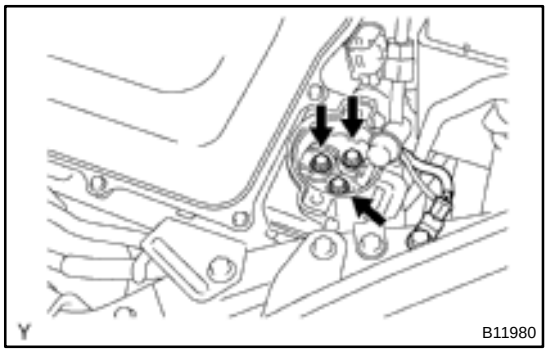

(e) Install the ground cable to the radiator upper support.
Torque: 8.0 N·m (82 kgf·cm, 71 in.·lbf)

(f) Install the power cable for MG1 with the 3 bolts.
Torque: 7.0 N·m (71 kgf·cm, 62 in.·lbf)

NOTICE:
Be careful to prevent foreign matter from entering the inside of connector cover.

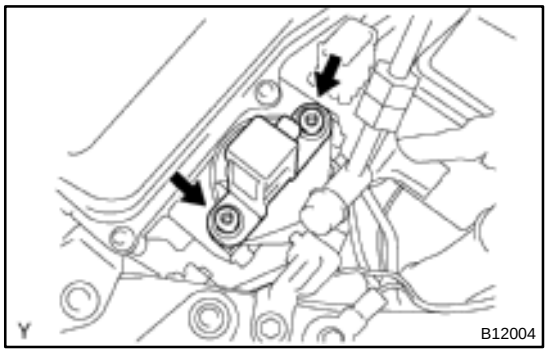

(g) Install the connector cover and circuit breaker sensor with the2 screws.
Torque: 20 N·m (204 kgf·cm, 15 ft·lbf)

(h) Connect the connector for circuit breaker sensor.

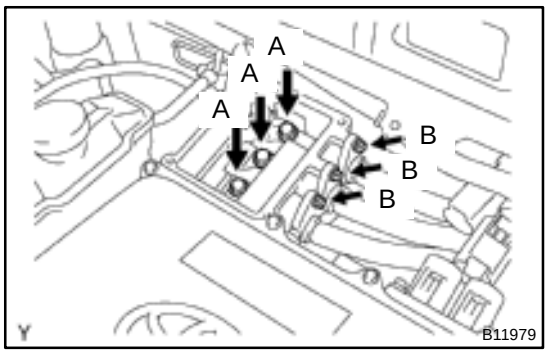

(i) Install the 3 power cables for MG2 with the 6 bolts.
Torque:
Bolt A: 19.5 N·m (199 kgf·cm, 14 ft·lbf)
Bolt B: 8.0 N·m (82 kgf·cm, 71 in.·lbf)

NOTICE:
Be careful to prevent foreign matter from entering the inside of connector cover.

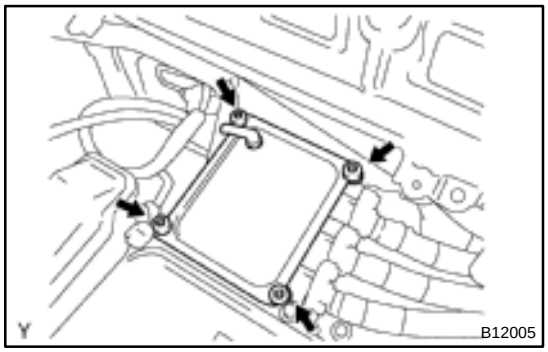

(j) Install the gasket and inverter terminal cover with the 4 screws.
Torque: 8.0 N·m (82 kgf·cm, 71 in.·lbf)

2. INSTALL COWL TOP PANEL (See page BO–31)

3. INSTALL SERVICE PLUG (See page HV–1)

4. FILL WITH HV COOLANT (See page HT–6)

5. OPERATION AFTER REPLACING CONVERTER & INVERTER ASSEMBLY

Even if the master warning light is not lit, clear DTC using a TOYOTA hand–held tester. When replacing a converter & inverter assembly of the vehicle in which no error occurs, also clear DTC using a TOYOTA hand held tester.

HINT:

When a TOYOTA hand–held tester cannot be used, disconnect the auxiliary battery for 1 min. or more and connect it again.

6. CHECKING AFTER REPLACING CONVERTER & INVERTER ASSEMBLY

Depressing the accelerator pedal to a degree of 50 %, increase the speed up to approx. 15 km/h 3 or 4 times to check that there is no problem in the inverter operation.

OIL PUMP ASSEMBLY

HT003–01

ON–VEHICLE REPAIR

1. REMOVE ENGINE UNDER COVER LH

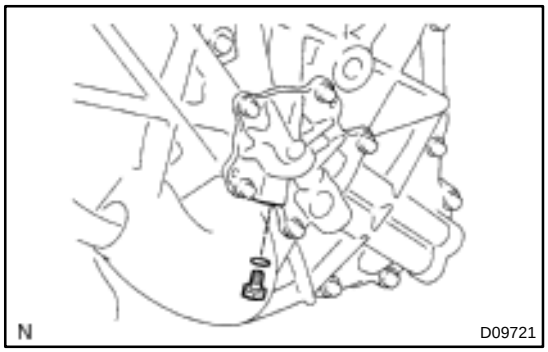

2. REMOVE OIL PUMP

(a) Remove the plug.

(b) Remove the O–ring from the plug.

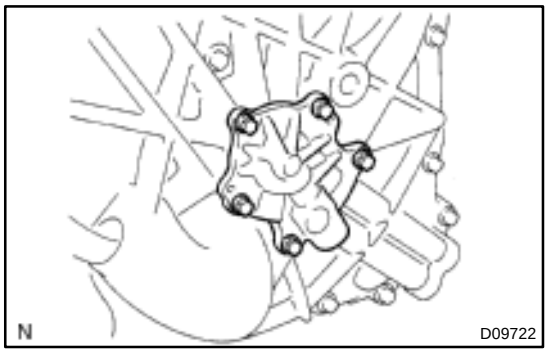

(c) Remove the 5 bolts and oil pump cover.

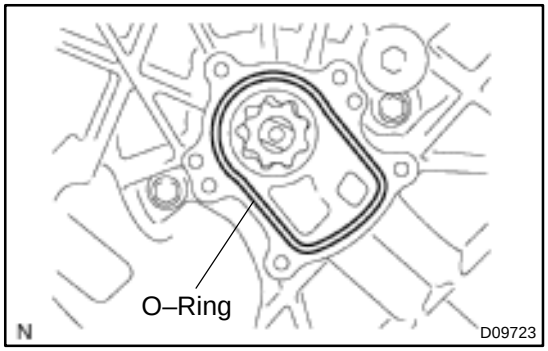

(d) Remove the O–ring.

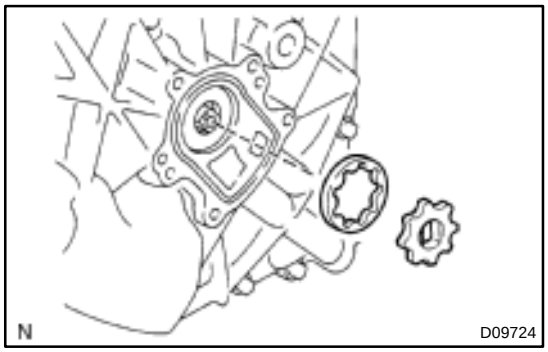

(e) Remove the oil pump driven rotor and drive rotor.

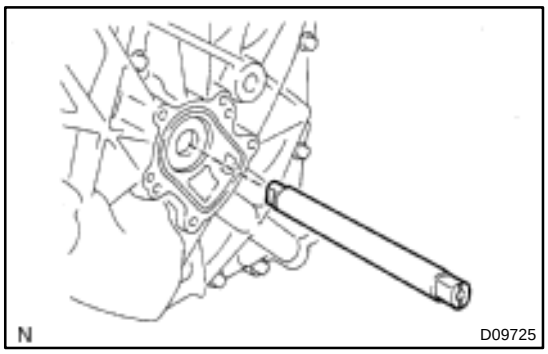

(f) Remove the oil pump drive shaft.

3. INSTALL OIL PUMP

(a) Apply ATF to each sliding part.

(b) Install the oil pump drive shaft.

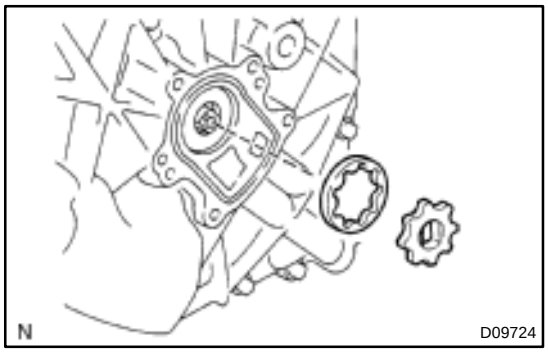

(c) Install the oil pump driven rotor and drive rotor.

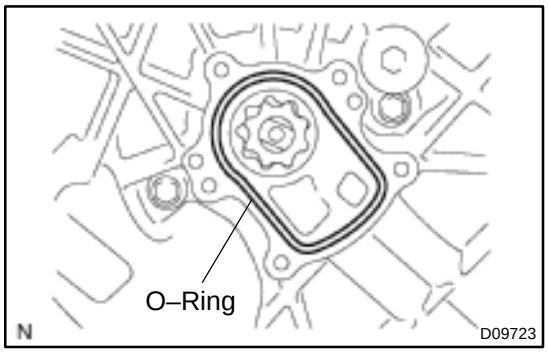

(d) Install a new O–ring.

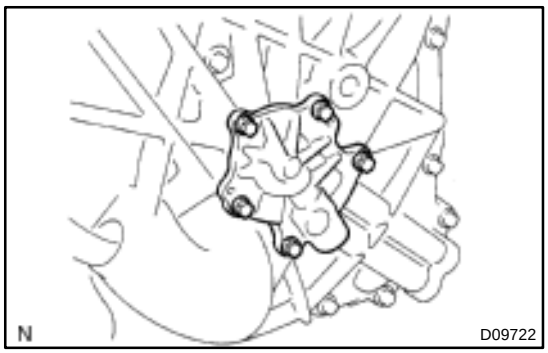

(e) Apply liquid sealer to 2 or 3 threads of the bolt end.
Sealant:
Part No. 08833–00080, THREE BOND 1344, LOCTITE 242 or equivalent

(f) Install the oil pump cover with the 5 bolts.
Torque: 5.5 N·m (56 kgf·cm, 49 in.·lbf)

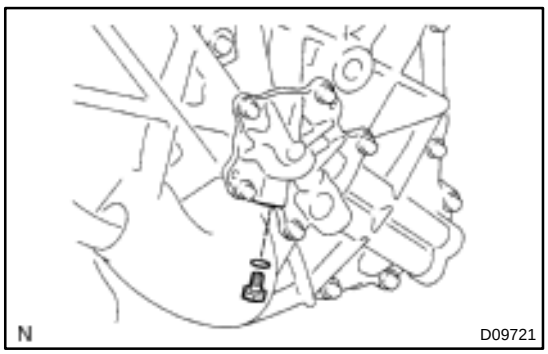

(g) Install a new O–ring and the plug.
Torque: 7.35 N·m (75 kgf·cm, 65 in.·lbf)

4. INSTALL ENGINE UNDER COVER LH

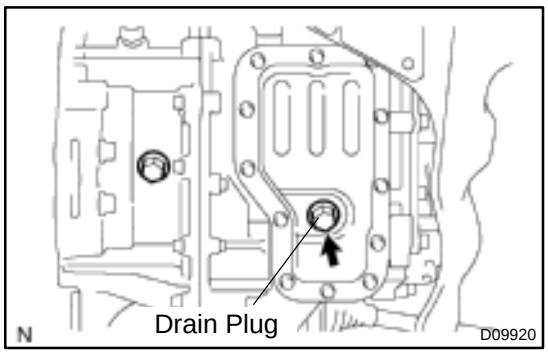

HYBRID TRANSAXLE UNIT

HT005–01

ON–VEHICLE REPAIR

1. REPLACE TRANSAXLE OIL

Fluid type: ATF Type T–IV
Capacity: 4.6 liters (4.9 US qts, 4.0 Imp. qts)
Torque: 49 N·m (498 kgf·cm, 36 ft·lbf)

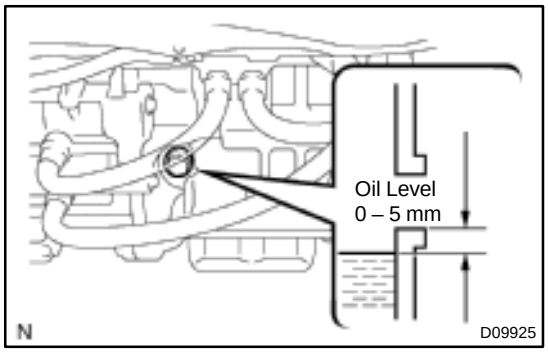

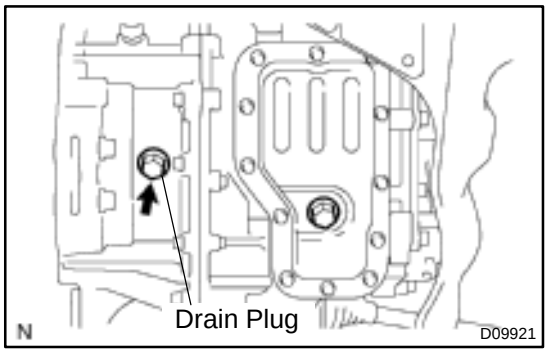

2. REPLACE COOLANT

(a) Remove the reservoir tank cap of the inverter.
(b) Remove the drain plug and drain the coolant.
(c) Install the drain plug with a new gasket.

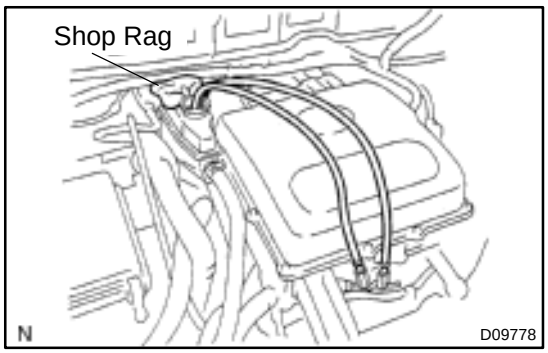

(d) Loosen the 2 bleeder plugs and connect the hoses.

HINT:

To prevent coolant from splashing, place a shop rag on the overflow pipe as shown in the illustration.

(e) Supply coolant from the reservoir tank.

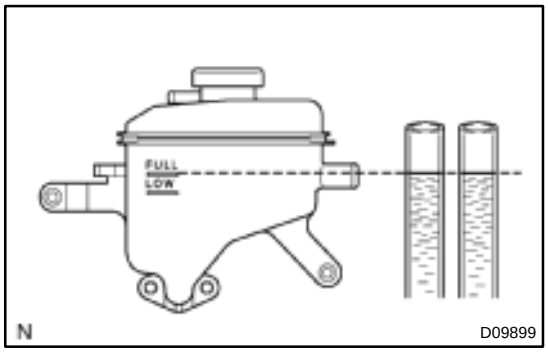

(f) Supply coolant until coolant level in the hose connected to the bleeder plugs reaches the same level with FULL of the reservoir tank as shown in the illustration.
(g) Tighten the 2 bleeder plugs.
(h) Turn the ignition switch ON and active the water pump.
(i) Leave it as it is for approx. 20 seconds.
(j) Turn the ignition switch OFF.
(k) Loosen the 2 bleeder plugs to bleed air.
(l) Close the 2 bleeder plugs again.

(m) Report the step (h) to (l) until the operation sound of the pump becomes lower and Coolant in the reservoir tank moves faster.

(n) With the ignition switch ON, wait for applox. 5 minutes.

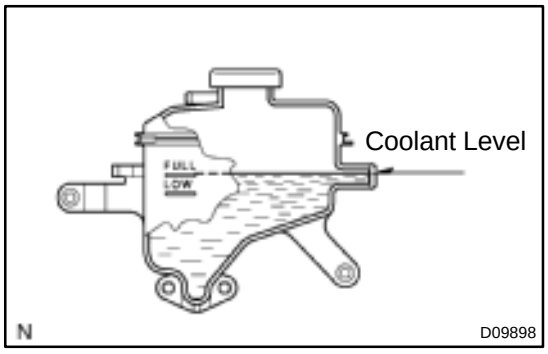

(o) Adjust the coolant level inside the reservoir tank as shown in the illustration.

HYBRID TRANSAXLE ASSEMBLY

COMPONENTS

HT00A–01

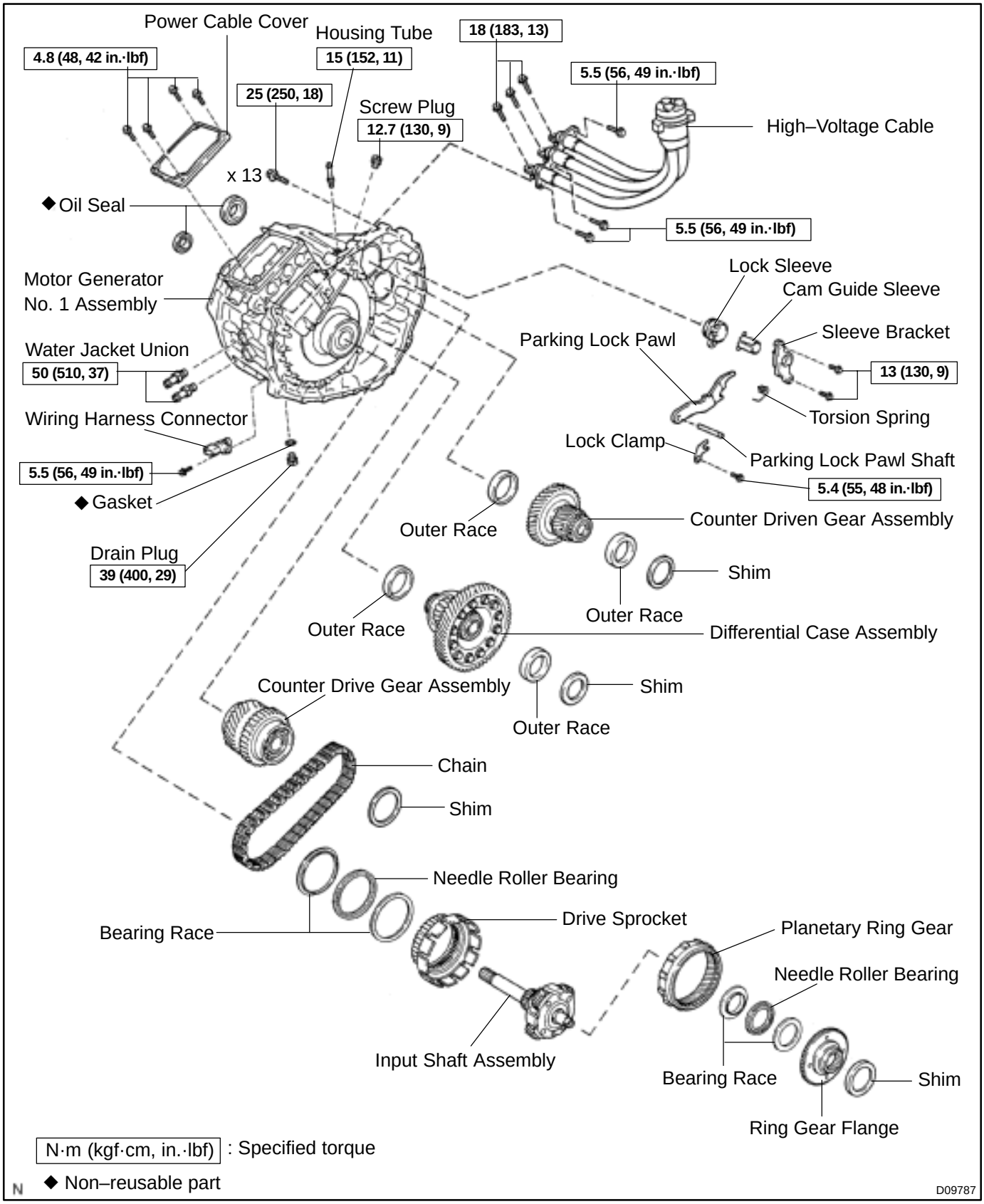

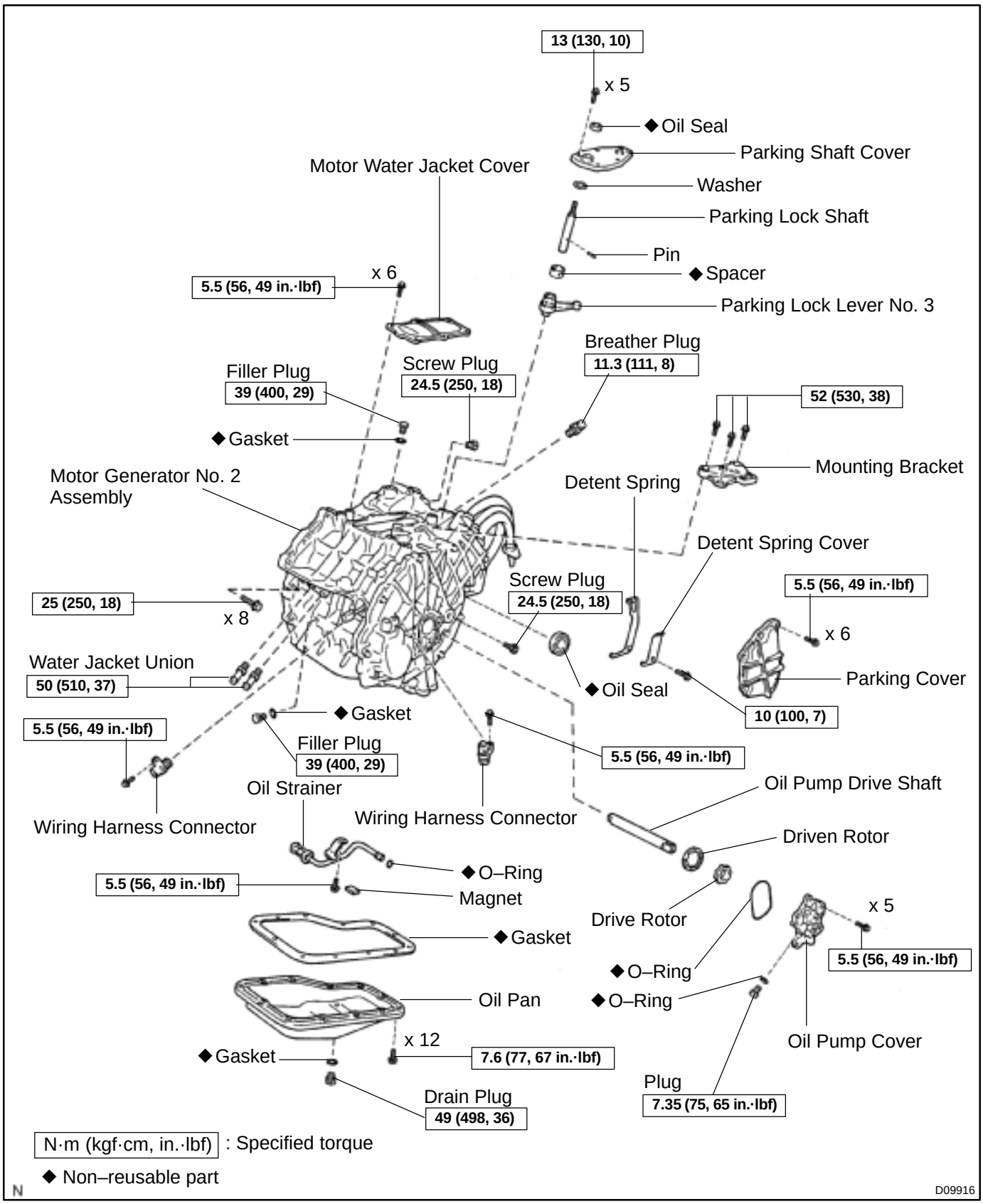
13 (130, 10)
x 5
◆Oil Seal
Parking Shaft Cover
Motor Water Jacket Cover
Washer
Parking Lock Shaft
Pin
x 6
5.5 (56, 49 in.·lbf)
◆Spacer
Parking Lock Lever No. 3
Breather Plug
11.3 (111, 8)
Screw Plug
24.5 (250, 18)
Filler Plug
39 (400, 29)
52 (530, 38)
◆Gasket
Mounting Bracket
Motor Generator No. 2 Assembly
Detent Spring
Detent Spring Cover
Screw Plug
24.5 (250, 18)
5.5 (56, 49 in.·lbf)
25 (250, 18)
x 8
x 6
Water Jacket Union
50 (510, 37)
Parking Cover
◆Oil Seal
10 (100, 7)
◆Gasket
5.5 (56, 49 in.·lbf)
Filler Plug
39 (400, 29)
5.5 (56, 49 in.·lbf)
Oil Pump Drive Shaft
Oil Strainer
Wiring Harness Connector
Wiring Harness Connector
Driven Rotor
◆O–Ring
5.5 (56, 49 in.·lbf)
Magnet
Drive Rotor
x 5
◆Gasket
◆O–Ring
5.5 (56, 49 in.·lbf)
Oil Pan
◆O–Ring
Oil Pump Cover
x 12
◆Gasket
7.6 (77, 67 in.·lbf)
Plug
7.35 (75, 65 in.·lbf)
Drain Plug
49 (498, 36)
N·m (kgf·cm, in.·lbf) : Specified torque
◆ Non–reusable part
N
D09916

HT00B–01

DISASSEMBLY

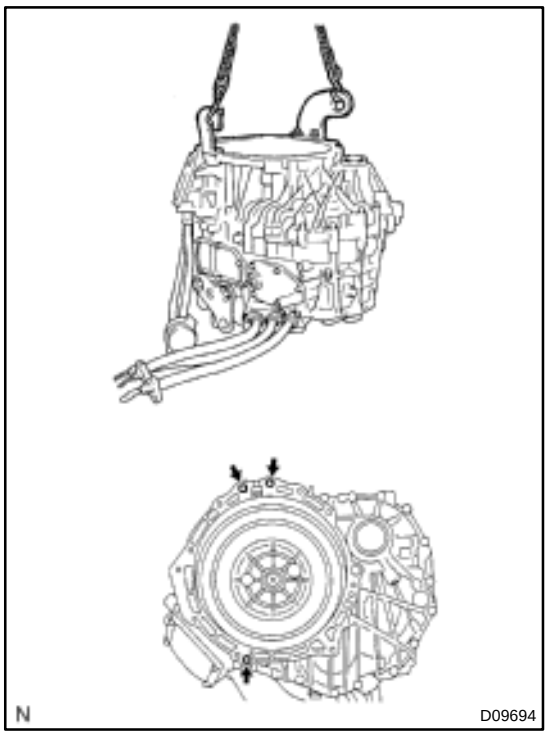

1. INSTALL ENGINE HUNGER

Install the engine hanger onto the MG1 side as shown in the illustration, and lift it up by a chain device.

Engine hanger part No.:
12281–67070, S1228–11781
Bolt part No.:
91642–81045
91642–81265 2 pieces
Nut part No.:
90178–10001
90179–12147 2 pieces

NOTICE:

- **As the transaxle itself is heavy, place a wood block underneath to stabilize it and carry out the operation carefully.**
- **Do not pull or bend the high–voltage cable of the MG1 assembly.**
- **Drain the fluid before disassembly.**

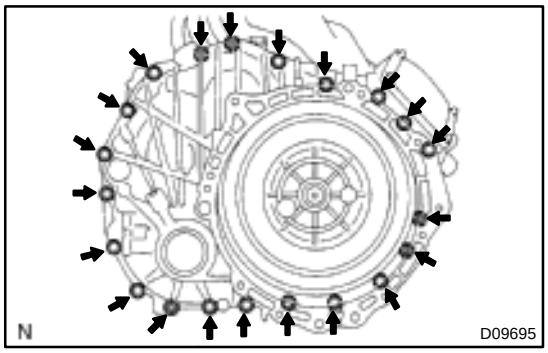

2. REMOVE MG1 ASSEMBLY

(a) Remove the 21 bolts.

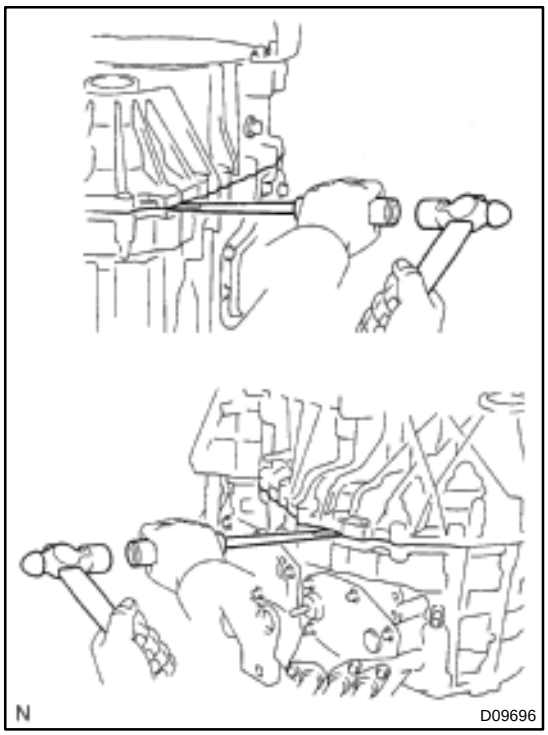

(b) Using a screwdriver and a hammer, disconnect the MG1 assembly from the MG2 assembly.

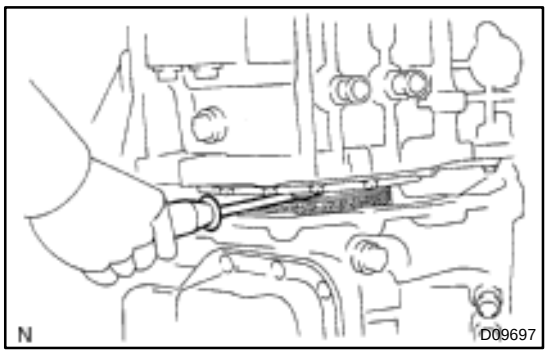

HINT:
When separating the MG1 assembly from the MG2 assembly, to prevent the drive sprocket from being removed with the MG1 assembly, push down the chain part with a taped screwdriver tip.

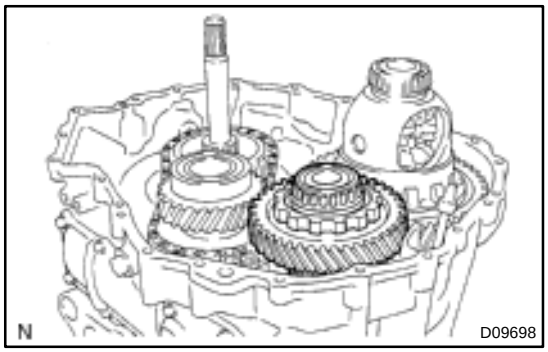

3. REMOVE COUNTER DRIVEN GEAR ASSEMBLY

Remove the counter driven gear assembly from the MG2 assembly.

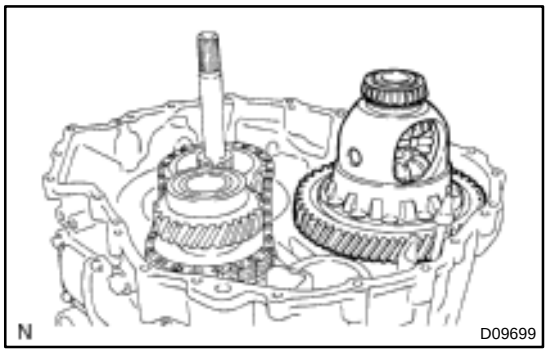

4. REMOVE DIFFERENTIAL CASE ASSEMBLY

Remove the differential case assembly from the MG2 assembly.

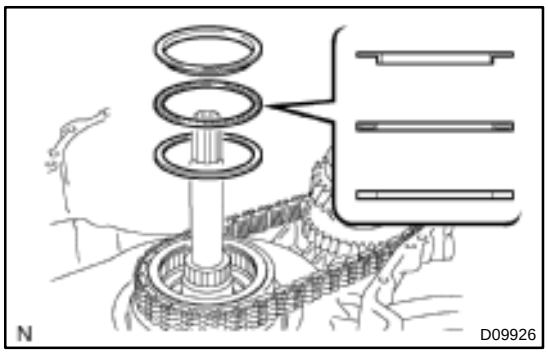

5. REMOVE 2 RACE AND NEEDLE ROLLER BEARING

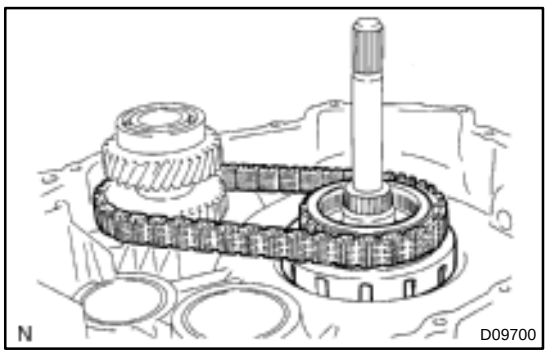

6. REMOVE DRIVE SPROCKET SUB–ASSEMBLY AND CHAIN

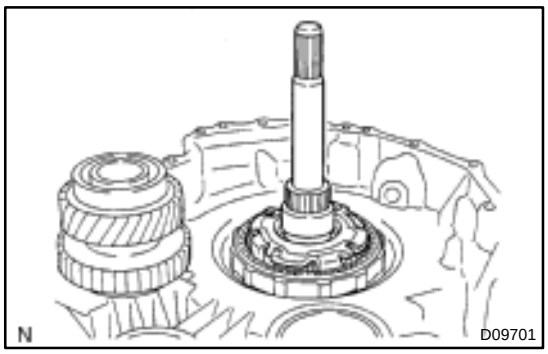

7. REMOVE INPUT SHAFT ASSEMBLY

(a) Remove the input shaft assembly.

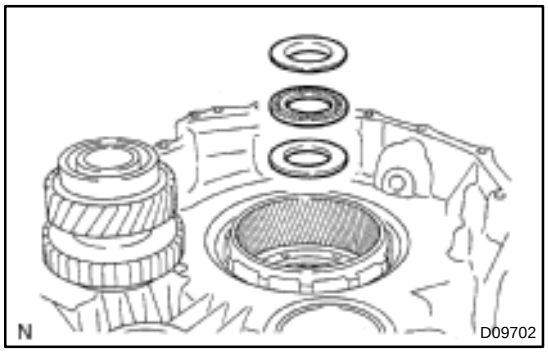

(b) Remove the needle roller bearing and 2 bearing races.

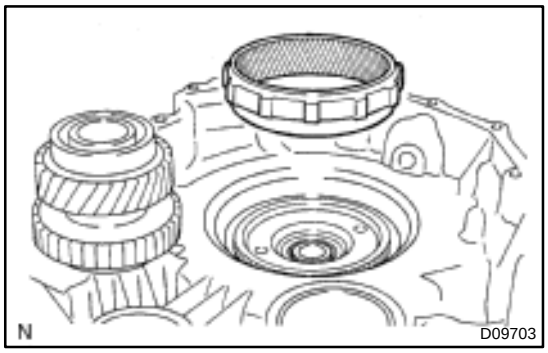

8. REMOVE PLANETARY RING GEAR

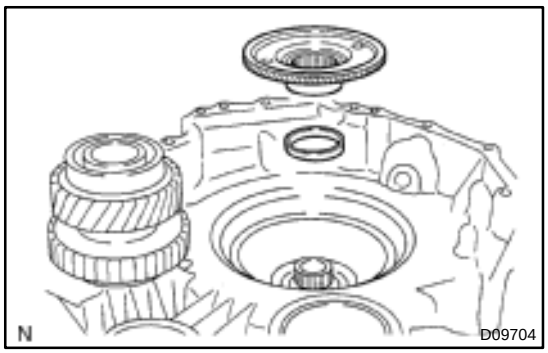

9. REMOVE RING GEAR FLANGE AND SHIM

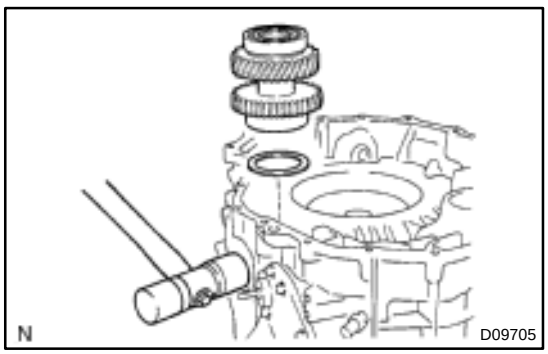

10. REMOVE COUNTER DRIVE GEAR AND SHIM

HINT:

Remove the counter drive gear by tapping the case with a plastic hammer.

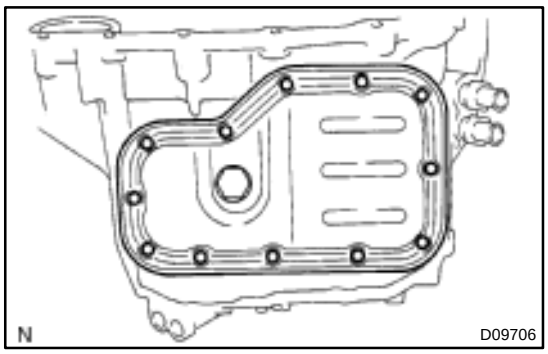

11. REMOVE OIL PAN AND GASKET

(a) Remove the drain plug and its gasket.
(b) Remove the 12 bolts.
(c) Remove the oil pan and its gasket.

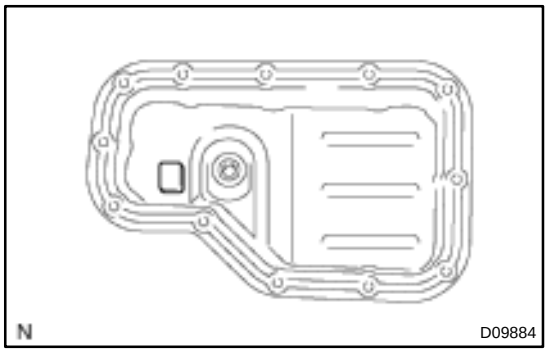

12. REMOVE MAGNET FROM OIL PAN

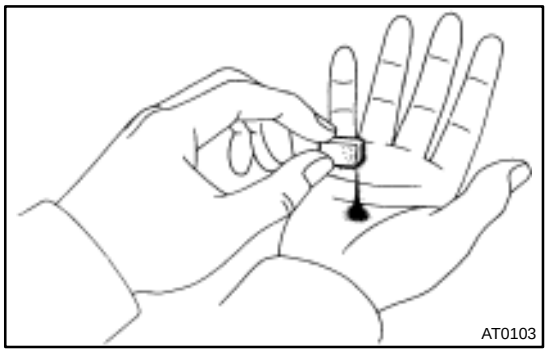

13. EXHAUST PARTICLES IN PAN

Remove the magnet and use it to collect any steel chips. Carefully examine the chips and particles in the oil pan and on the magnet to indentify what type of wear has occurred in the transaxle.

- Steel (magnetic): bearing, gear and plate wear
- Brass (non–magnetic): bushing wear

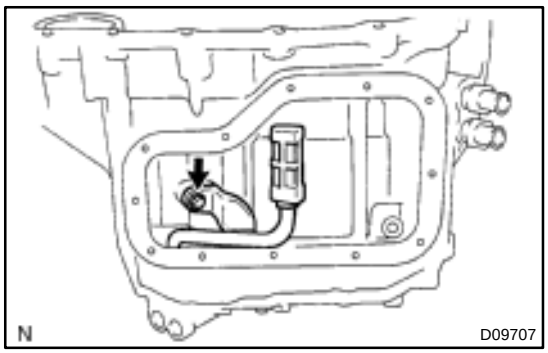

14. REMOVE OIL STRAINER

(a) Remove the bolt and oil strainer.

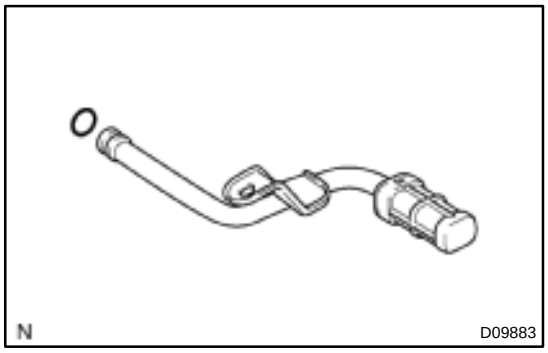

(b) Remove the O–ring from the oil strainer.

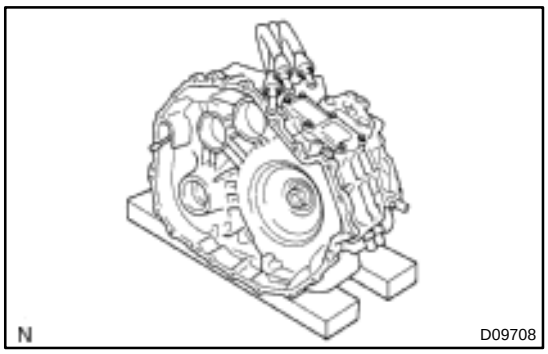

15. SET MG2 ASSEMBLY

As illustrated, set the MG2 assembly and wood blocks.

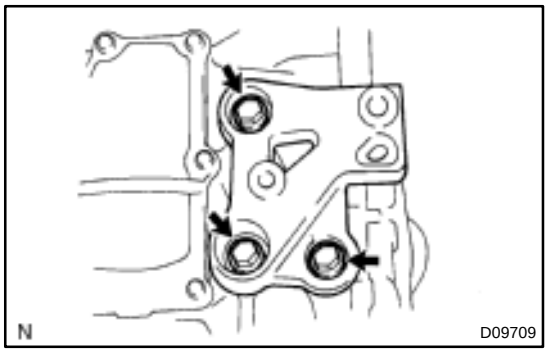

16. REMOVE MOUNTING BRACKET

Remove the 3 bolts and mounting bracket.

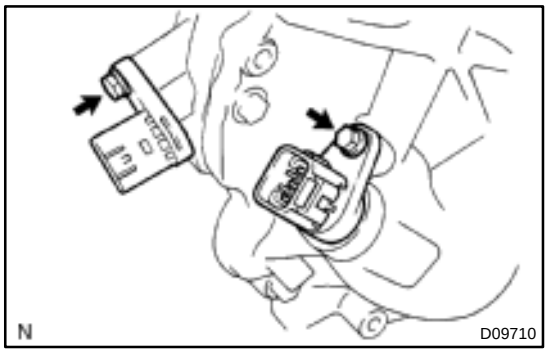

17. REMOVE WIRING HARNESS CONNECTOR (MG2 side)

Remove the 2 bolts and the 2 wiring harness connectors.

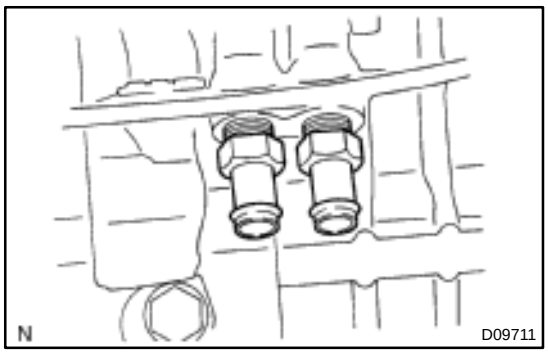

18. REMOVE 2 WATER JACKET UNIONS (MG2 side)

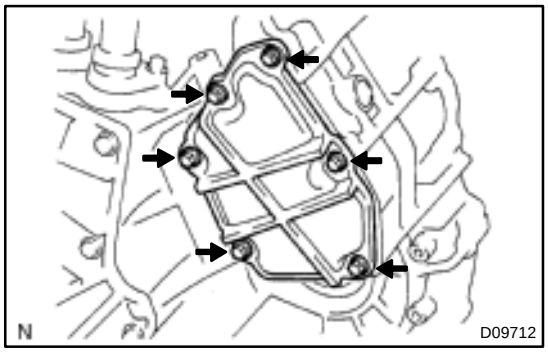

19. REMOVE PARKING COVER

Remove the 6 bolts and parking cover.

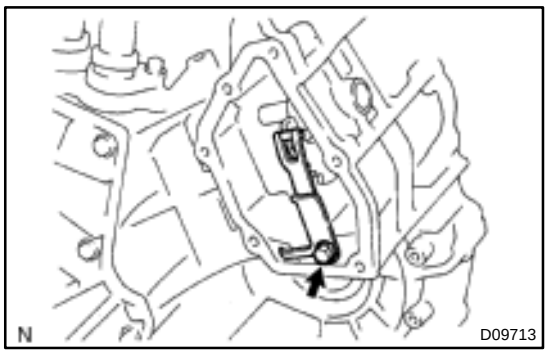

20. REMOVE DETENT SPRING COVER AND DETENT SPRING

Remove the bolt, detent spring cover and detent spring.

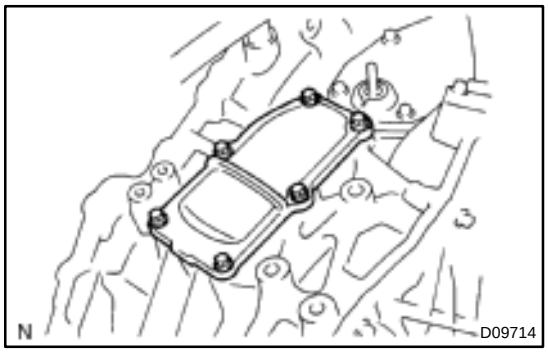

21. REMOVE MOTOR WATER JACKET COVER

Remove the 6 bolts and motor water jacket cover.

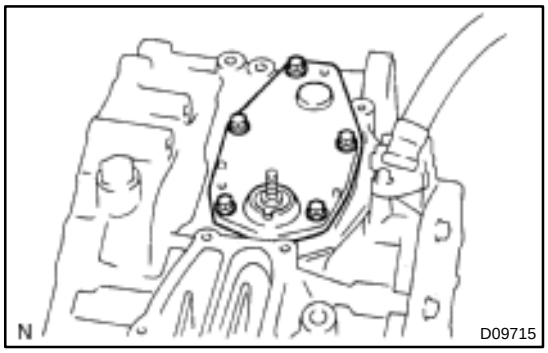

22. REMOVE PARKING SHAFT COVER

(a) Remove the 5 bolts and parking shaft cover.

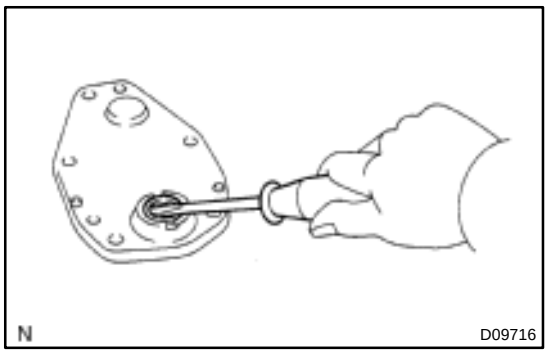

(b) Using a screwdriver, remove the oil seal from the cover.

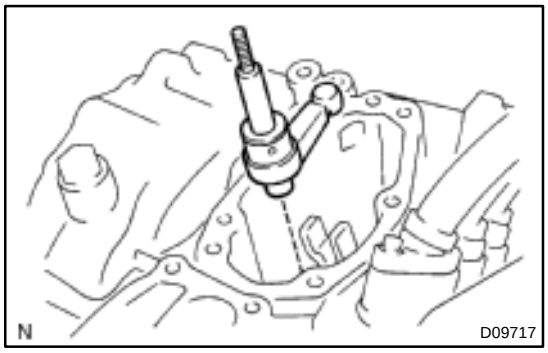

23. REMOVE PARKING LOCK SHAFT ASSEMBLY

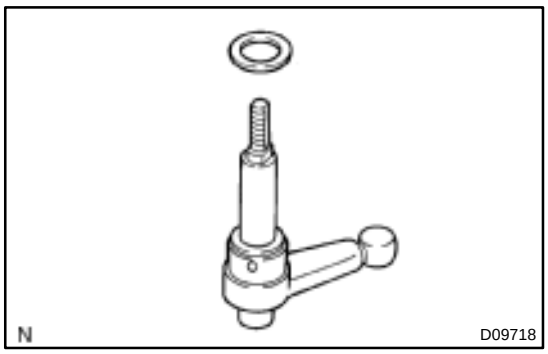

24. DISASSEMBLE PARKING LOCK SHAFT ASSEMBLY

(a) Remove the washer.

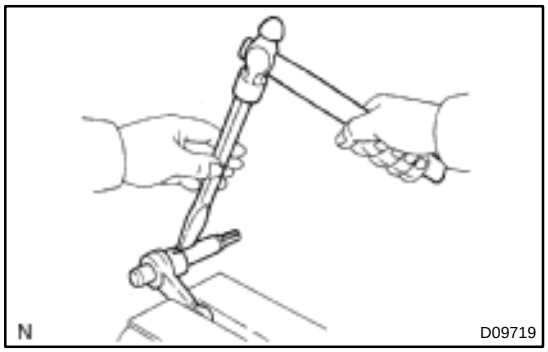

(b) Using a chisel and a hammer, cut the spacer.

(c) Remove the spacer.

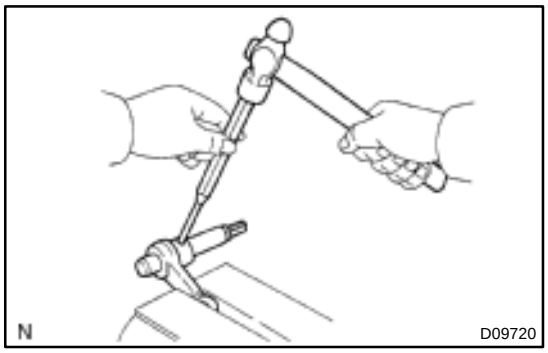

(d) Using a pin punch and a hammer, drive out the pin.

(e) Remove the parking lock lever No. 3 from the parking lock shaft.

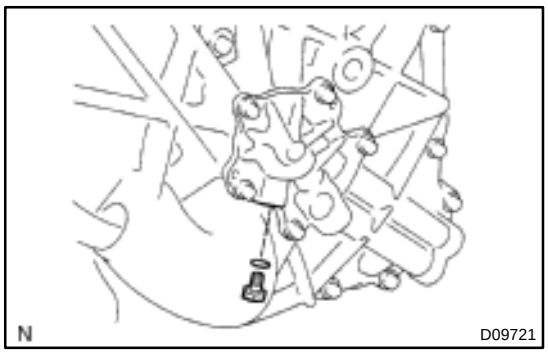

25. REMOVE OIL PUMP

(a) Remove the plug.

(b) Remove the O–ring from the plug.

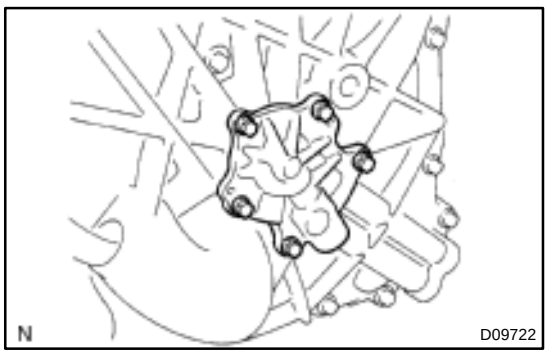

(c) Remove the 5 bolts and oil pump cover.

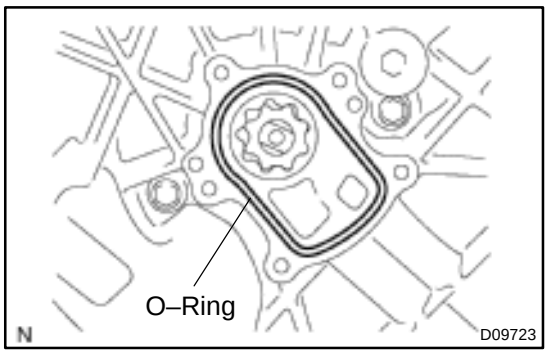

(d) Remove the O–ring.

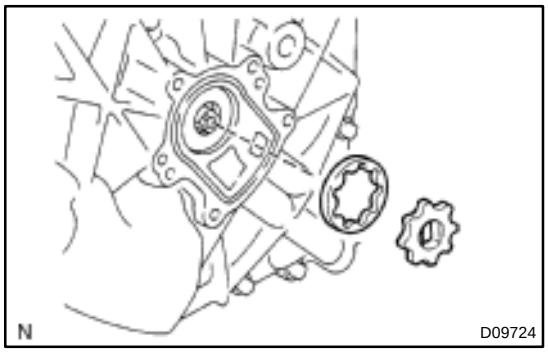

(e) Remove the oil pump driven rotor and drive rotor.

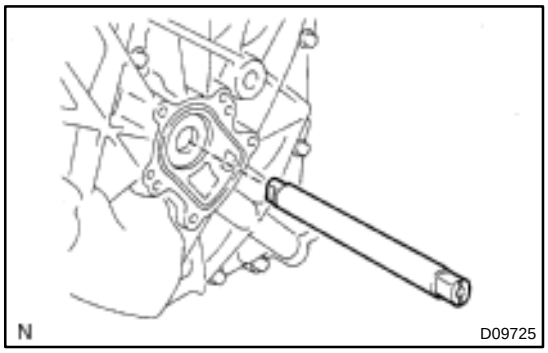

(f) Remove the oil pump drive shaft.

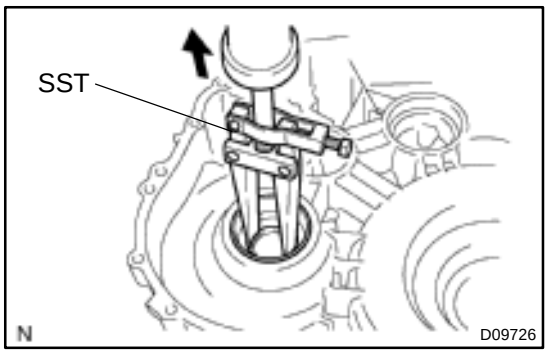

26. REMOVE DIFFERENTIAL SIDE BEARING OUTER RACE LH AND SHIM (MG2 side)

Using SST, drive out the differential side bearing outer race and shim.

SST 09308–00010

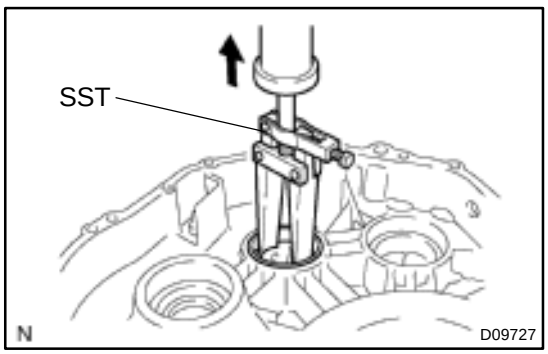

27. REMOVE COUNTER DRIVEN GEAR SIDE BEARING OUTER RACE LH AND SHIM

(a) Using SST, drive out the counter driven gear side bearing outer race and shim.

SST 09308–00010

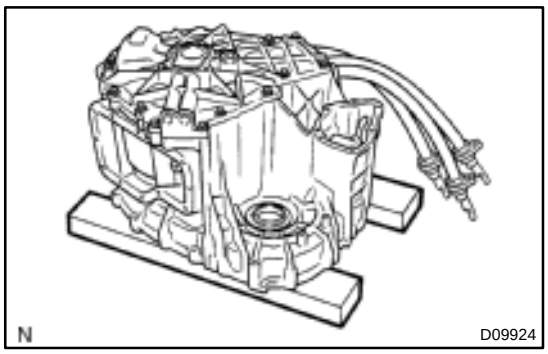

(b) Overturn the MG2 assembly and place a wood block under it stabilize.

NOTICE:
Be careful not to bend the parking lock rod.

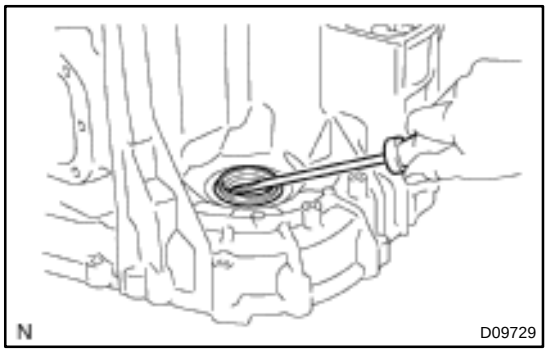

28. REMOVE DIFFERERENTIAL OIL SEAL LH (MG2 side)

Using a screwdriver, drive out the oil seal.

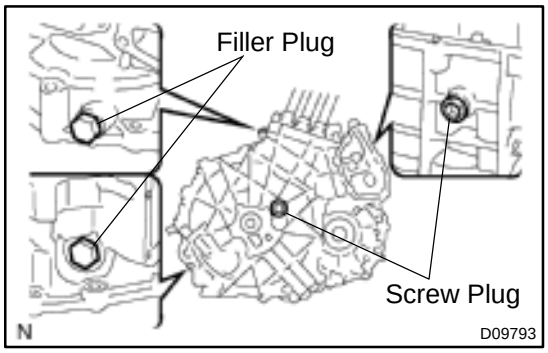

29. REMOVE FILLER PLUG AND SCREW PLUG (MG2 side)

(a) Remove the 2 screw plugs with a hexagon wrench.
(b) Remove the 2 filler plugs and the 2 gaskets.

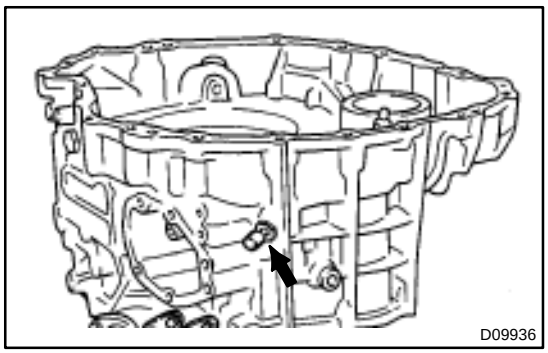

30. REMOVE BREATHER PLUG

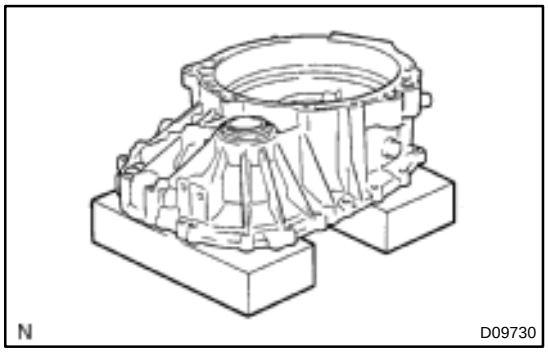

31. PLACE WOOD BLOCK UNDER MG1 ASSEMBLY TO STABILIZE

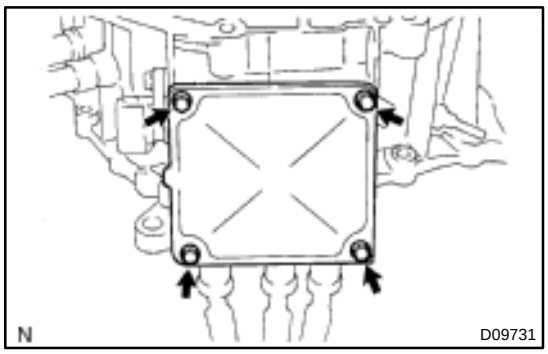

32. REMOVE HIGH–VOLTAGE CABLE

(a) Remove the 4 bolts and power cable cover.

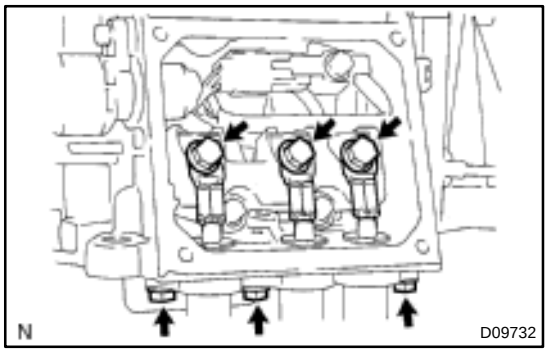

(b) Remove the 6 bolts and the high–voltage cable.

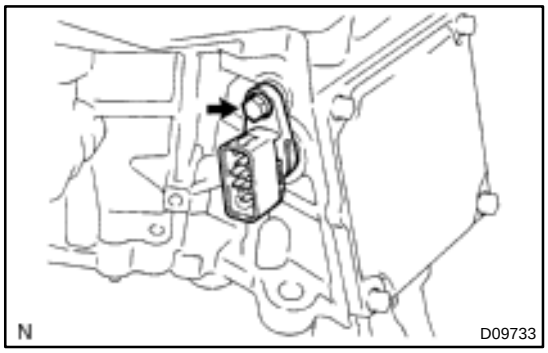

33. REMOVE WIRING HARNESS CONNECTOR (MG1 side)

Remove the bolt and wiring harness connector.

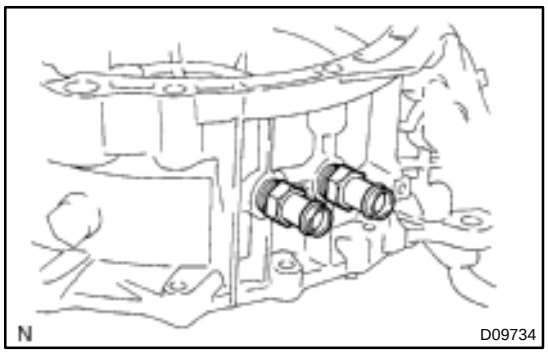

34. REMOVE 2 WATER JACKET UNIONS (MG1 side)

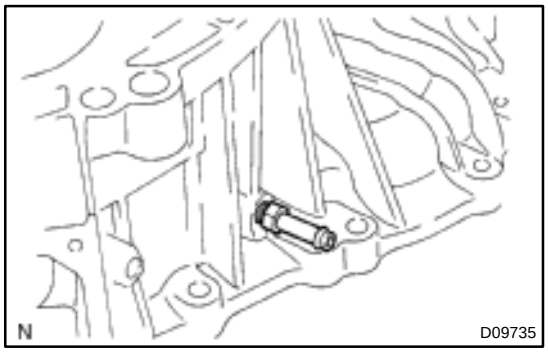

35. REMOVE HOUSING TUBE

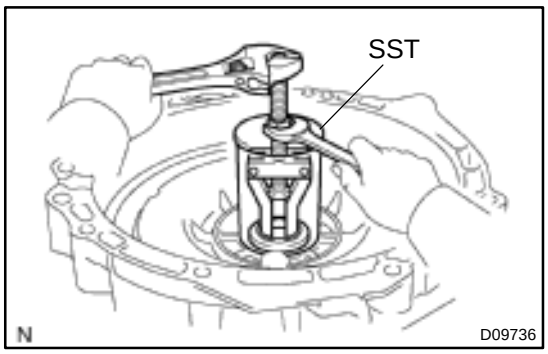

36. REMOVE INPUT SHAFT OIL SEAL

Using SST, drive out the input shaft oil seal.

SST 09612–30012

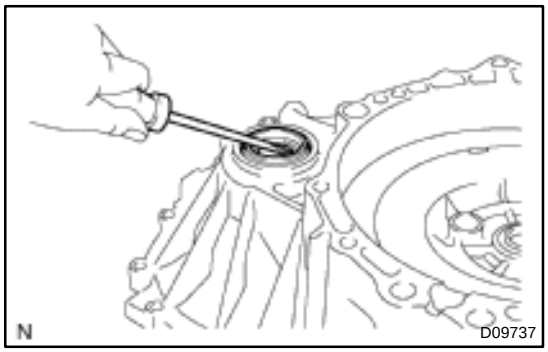

37. REMOVE DIFFERENTIAL OIL SEAL RH (MG1 side)

Using a screwdriver, drive out the differential oil seal RH.

38. TURN MG1 ASSEMBLY UPSIDE DOWN

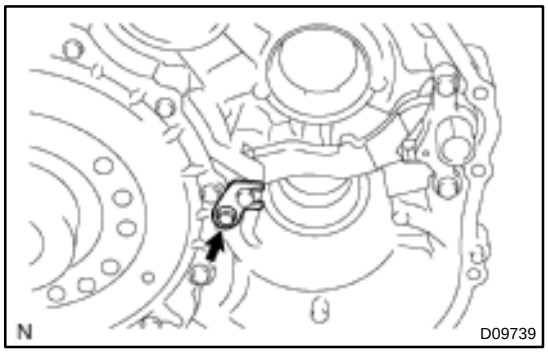

39. REMOVE PARKING LOCK PAWL

(a) Remove the bolt and the lock clamp.

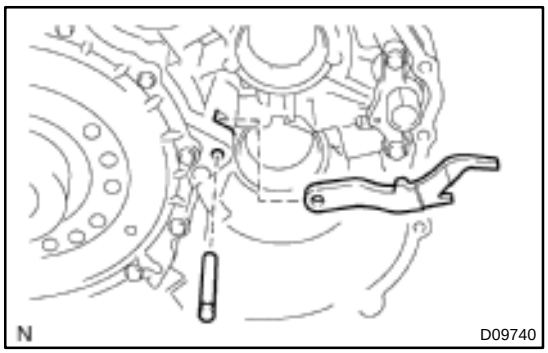

(b) Remove the parking lock pawl shaft.

(c) Remove the parking lock pawl.

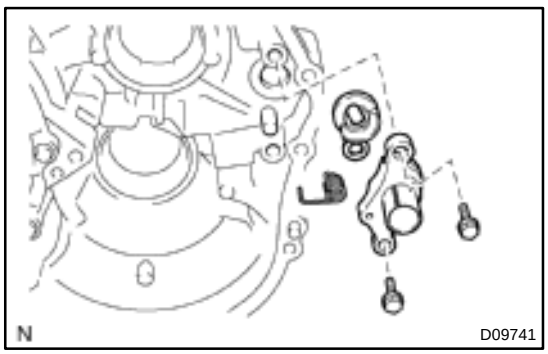

40. REMOVE PARKING LOCK SLEEVE

(a) Remove the 2 bolts, sleeve bracket, torsion spring and parking lock sleeve.

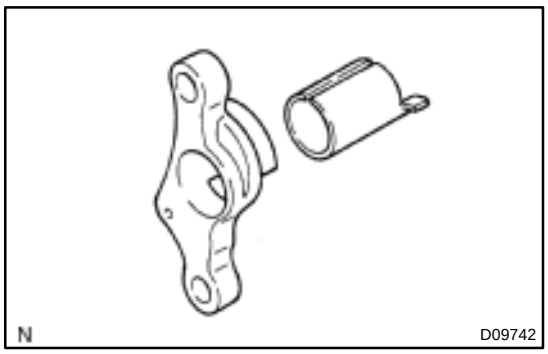

(b) Remove the cam guide sleeve from the sleeve bracket.

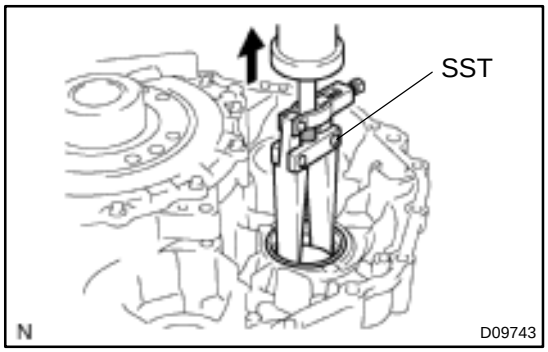

41. REMOVE COUNTER DRIVEN GEAR SIDE BEARING OUTER RACE RH (MG1 side)

Using SST, drive out the counter driven gear side bearing outer race RH.

SST 09308–00010

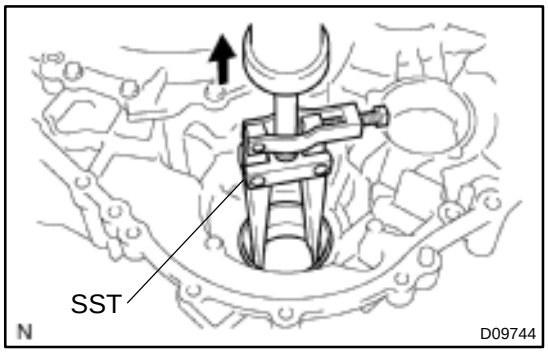

42. REMOVE DIFFERENTIAL SIDE BEARING OUTER RACE RH (MG1 side)

Using SST, drive out the differential side bearing outer race RH.

SST 09308–00010

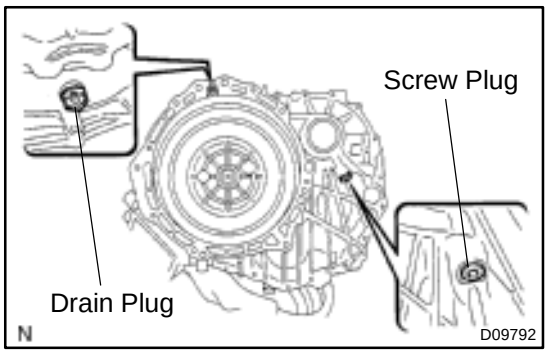

43. REMOVE DRAIN PLUG AND SCREW PLUG (MG1 side)

(a) Remove the screw plug from the MG1 assembly with a hexagon wrench.

(b) Remove the drain plug and the gasket.

HT00C–02

REASSEMBLY

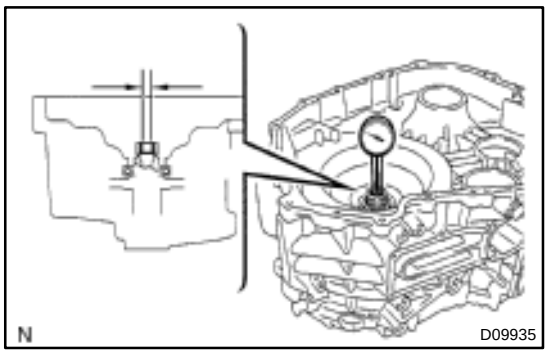

1. INSPECT ROTOR BUSH OF MG2 ASSEMBLY

Using a dial indicator, measure the inside diameter of the rotor bush.

Standard diameter:
20.025 – 20.046 mm (0.78838 – 0.78921 in.)
Maximum diameter:
20.096 mm (0.79118 in.)

If the inside diameter exceeds the limit, replace the MG2 assembly.

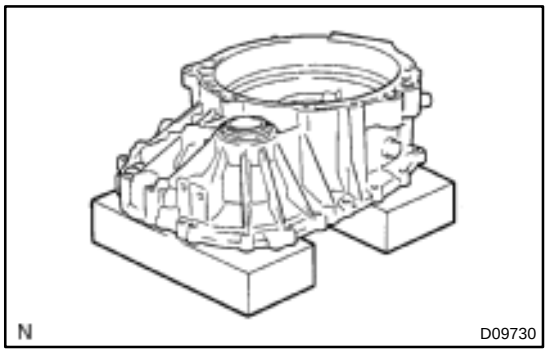

2. PLACE WOOD BLOCK UNDER MG1 ASSEMBLY TO STABILIZE

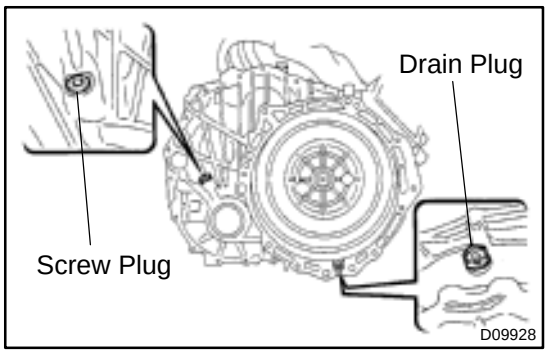

3. INSTALL DRAIN PLUG AND SCREW PLUG (MG1 side)

(a) Apply liquid sealer to the screw plug and install it to the MG1 assembly with a hexagon wrench.
Sealant:
Part No. 08833–00080, TREE BOND 1344, LOCTITE 242 or equivalent
Torque: 12.7 N·m (130 kgf·cm, 9 ft·lbf)

(b) Install a new gasket and the drain plug.
Torque: 39 N·m (400 kgf·cm, 29 ft·lbf)

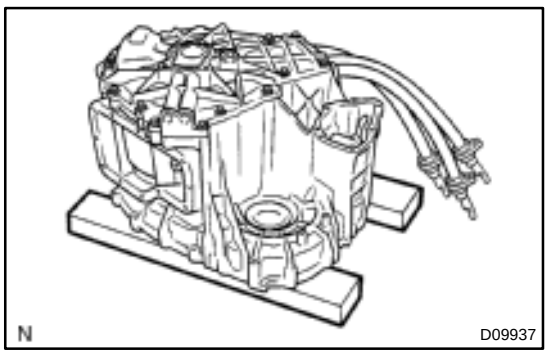

4. PLACE WOOD BLOCK UNDER MG2 ASSEMBLY

NOTICE:
Be careful not to bend the parking lock rod.

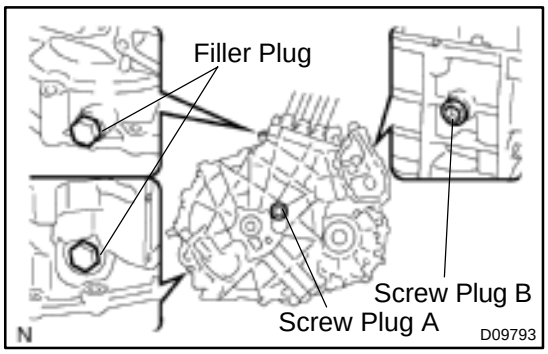

5. INSTALL FILLER PLUG AND SCREW PLUG (MG2 side)

(a) Apply liquid sealer to the 2 screw plugs and install them to the MG2 assembly with a hexagon wrench.

Sealant:

A: Part No. 08833–00070, THREE BOND 1324 or equivalent

B: Part No. 08833–00080, THREE BOND 1344, LOCTITE 242 or equivalent

Torque: 24.5 N·m (250 kgf·cm, 18 ft·lbf)

NOTICE:

Be careful not to bend the parking lock rod.

(b) Install 2 new gaskets and the 2 filler plugs.

Torque: 39 N·m (400 kgf·cm, 29 ft·lbf)

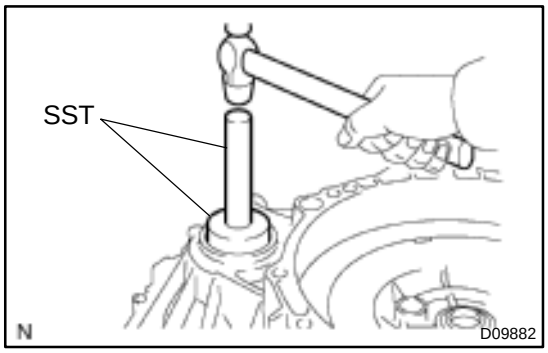

6. INSTALL DIFFERENTIAL OIL SEAL RH (MG1 side)

(a) Using SST and a hammer, install a new oil seal.

SST 09710–20011 (09710–06071), 09950–70010 (09951–07100)

Oil seal depth: 2.7 ± 0.5 mm (0.106 ± 0.020 in.)

(b) Coat the lip of the oil seal with MP grease.

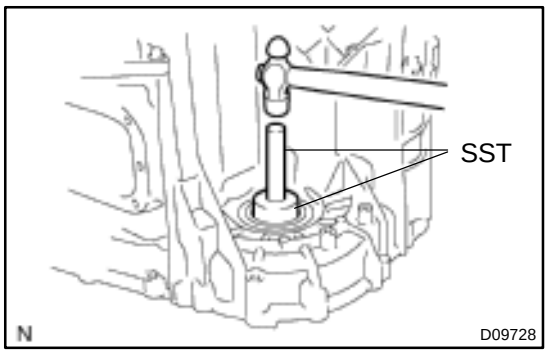

7. INSTALL DIFFERENTIAL OIL SEAL LH (MG2 side)

(a) Using SST and a hammer, install a new oil seal LH.

SST 09710–20011 (09710–06071), 09950–70010 (09951–07100)

Oil seal depth: 2.7 ± 0.5 mm (0.106 ± 0.020 in.)

(b) Coat the lip of the oil seal with MP grease.

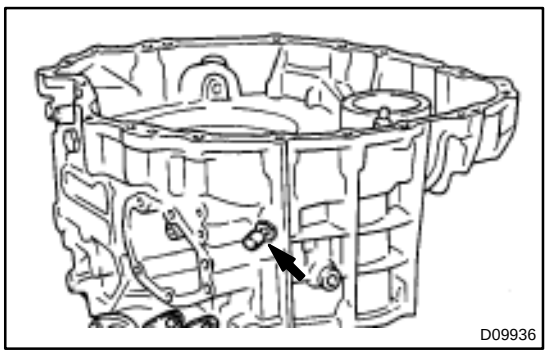

8. INSTALL BREATHER PLUG

Torque: 11.3 N·m (111 kgf·cm, 8 ft·lbf)

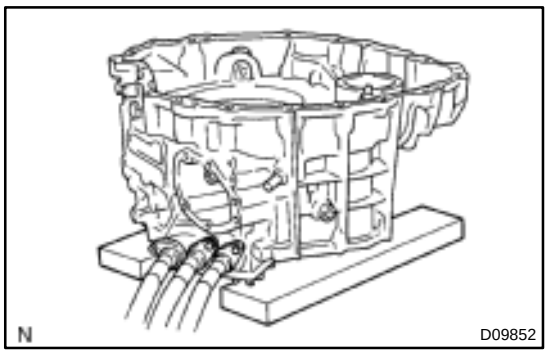

9. INSTALL OUTER RACE AND SHIM

HINT:

If there is some diformation or scratch to the outer race and shim, replace each of them by a new one.

(a) Place a wood block under the MG2 assembly to stabilize.

NOTICE:

- **Set the MG2 assembly horizontally.**
- **Unreasonable force should not be applied to the high–voltage cable.**

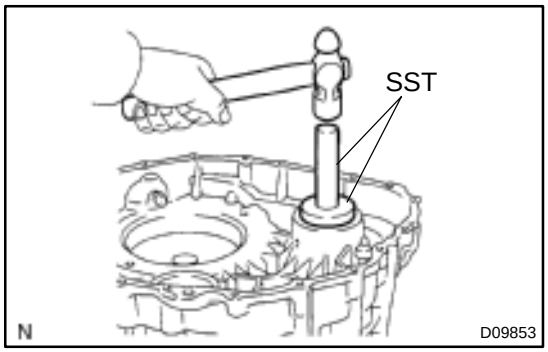

(b) MG2 side:

Using SST and a hammer, install the outer race of differential side bearing LH and shim.

SST 09950–60020 (09951–00680), 09950–70010 (09951–07100)

HINT:

If replacing the shim, install a new shim which has the same thickness with the removed.

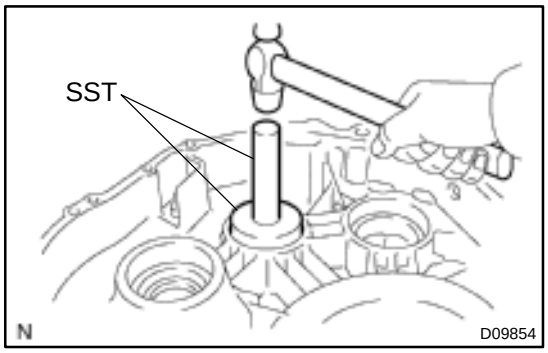

(c) MG2 side:

Using SST and a hammer, install the tapered roller bearing outer race LH of the counter driven gear and shim.

SST 09950–60020 (09951–00680), 09950–70010 (09951–07100)

HINT:

If replacing the shim, install a new shim which has the same thickness with the removed.

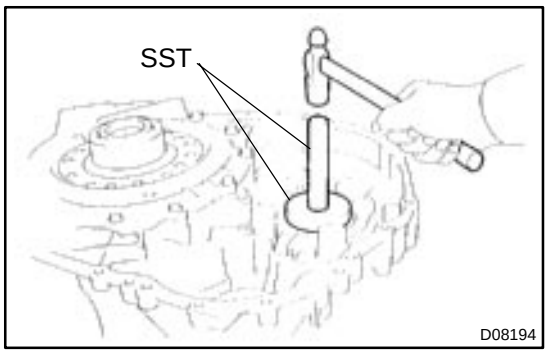

(d) MG1 side:

Using SST and a hammer, install the side bearing outer race RH of the differential.

SST 09950–60020 (09951–00680), 09950–70010 (09951–07100)

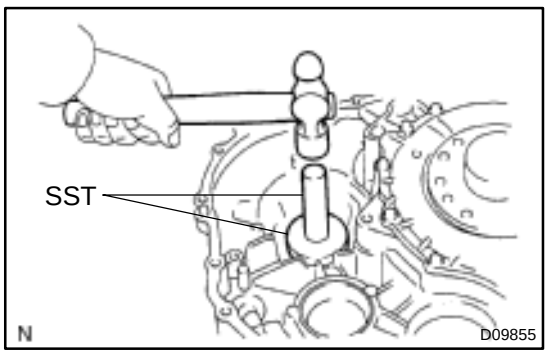

(e) MG1 side:

Using SST and a hammer, install the tapered roller bearing outer race RH of the counter driven gear.

SST 09950–60020 (09951–00680), 09950–70010 (09951–07100)

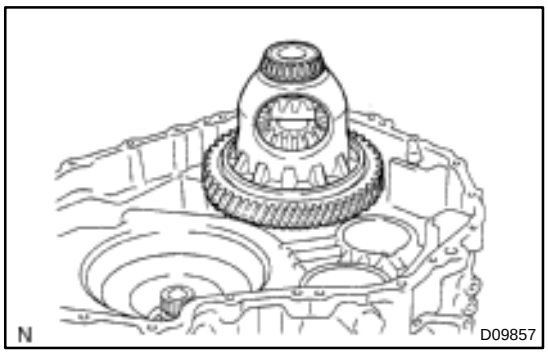

10. INSTALL DIFFERENTIAL TO MG2 ASSEMBLY

(a) Install the differential assembly to the MG2 assembly.

HINT:

Apply ATF to the side bearing.

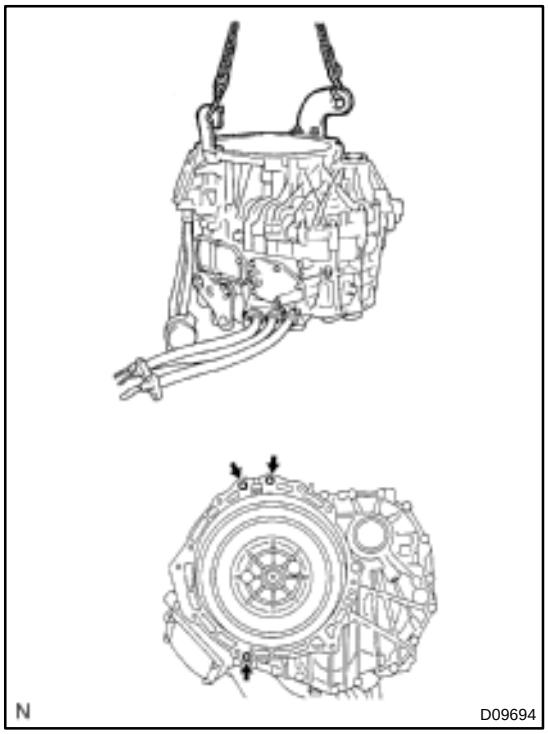

(b) Install the engine hanger onto the MG1 side as shown in the illustration, and lift it up by a chain device.

Engine hanger part No.:
12281 – 67070, S1228 – 11781
Bolt part No.:
91642 – 81045
91642 – 81265 2 pieces
Nut part No.:
90178 – 10001
90179 – 12147 2 pieces

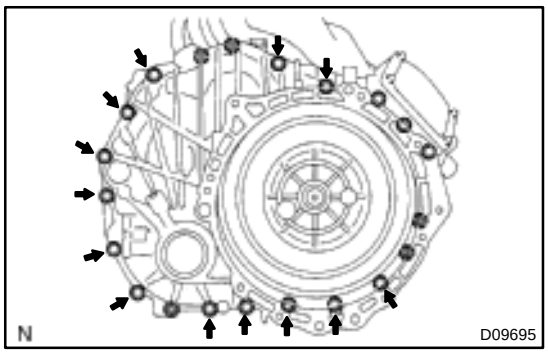

(c) Install the 13 bolts and MG1 assembly to the MG2 assembly.

Torque: 25 N·m (250 kgf·cm, 18 ft·lbf)

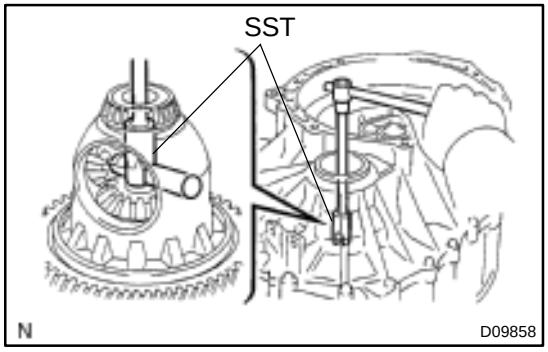

(d) Using SST, rotate the differential case assembly in both directions to make it fit.

SST 09564–32011

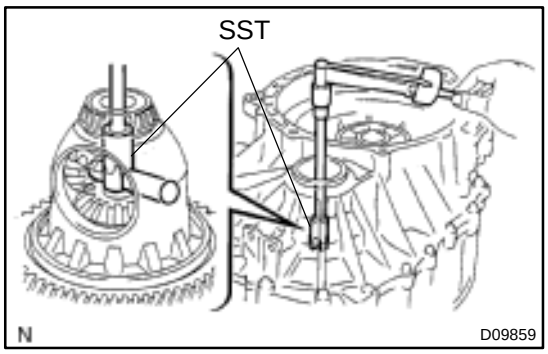

(e) Using SST and a small torque wrench, measure the differential preload.
SST 09564–32011
Preload (Starting torque):
New bearing
0.98 – 1.57 N·m
(9.99 – 16.01 kgf·cm, 8.67 – 13.90 in.·lbf)
Reused bearing
0.49 – 0.78 N·m
(5.00 – 7.95 kgf·cm, 4.34 – 6.90 in.·lbf)
Preload (Turning torque):
0.78 – 1.37 N·m (60 rpm)
(7.95 – 13.97 kgf·cm, 6.90 – 12.13 in.·lbf)

If the preload is not within the specified range, replace the shim of the differential outer race LH.

Shim thickness:

Mark	Thickness mm (in.)	Mark	Thickness mm (in.)
1	1.80 (0.0709)	61	2.14 (0.0843)
2	1.83 (0.0720)	62	2.16 (0.0850)
3	1.86 (0.0732)	63	2.18 (0.0858)
4	1.89 (0.0744)	64	2.20 (0.0866)
50	1.92 (0.0756)	65	2.22 (0.0874)
51	1.94 (0.0764)	66	2.24 (0.0882)
52	1.96 (0.0772)	67	2.26 (0.0890)
53	1.98 (0.0780)	68	2.28 (0.0898)
54	2.00 (0.0787)	69	2.30 (0.0906)
55	2.02 (0.0795)	70	2.32 (0.0913)
56	2.04 (0.0803)	19	2.34 (0.0921)
57	2.06 (0.0811)	20	2.37 (0.0933)
58	2.08 (0.0819)	–	2.40 (0.0945)
59	2.10 (0.0827)	22	2.43 (0.0957)
60	2.12 (0.0835)	23	2.46 (0.0969)

HINT:
As a rank of shim thickness is increased (0.020 mm), the preload of approx. 0.23 N·m (2.4 kgf·cm, 2.1 in.·lbf) is increased accordingly.

11. INSTALL COUNTER DRIVEN GEAR TO MG2 ASSEMBLY

(a) Remove the 13 bolts, separate the MG1 assembly and the MG2 assembly.

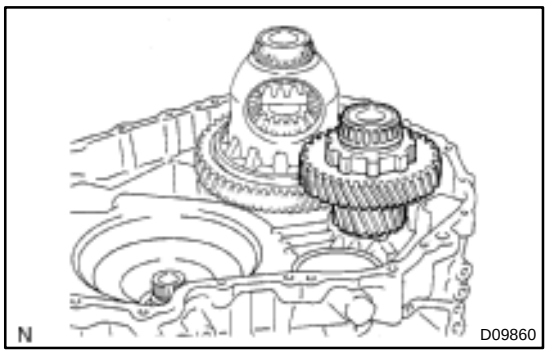

(b) Install the counter driven gear to the MG2 assembly.
HINT:
Apply ATF to the side bearing.

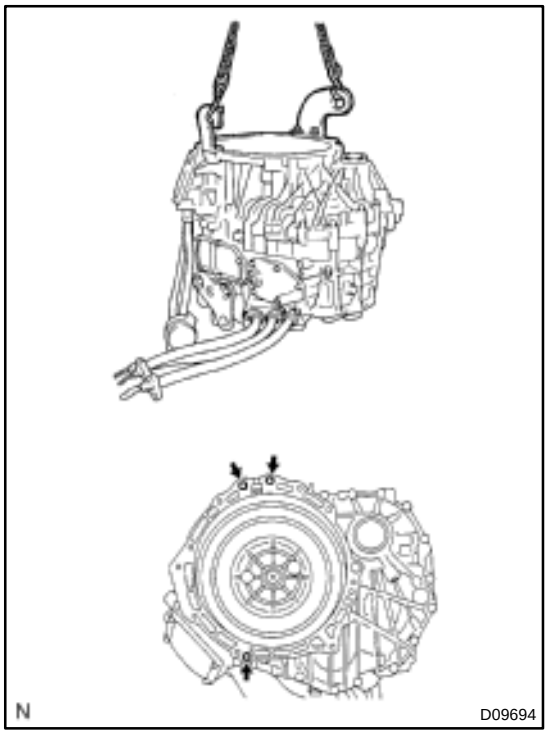

(c) Install the engine hanger onto the MG1 side as shown in the illustration, and lift it up by a chain device.
Engine hanger part No.:
12281 – 67070, S1228 – 11781
Bolt part No.:
91642 – 81045
91642 – 81265 2 pieces
Nut part No.:
90178 – 10001
90179 – 12147 2 pieces

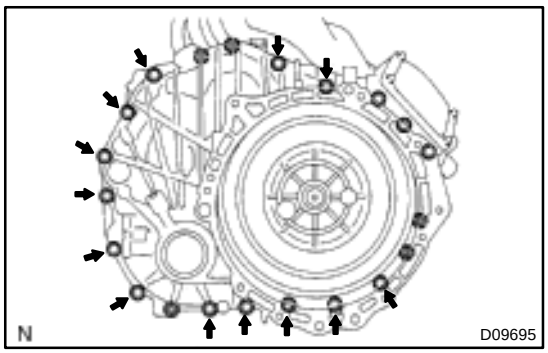

(d) Install the MG1 assembly to the MG2 assembly with the 13 bolts.
Torque: 25 N·m (250 kgf·cm, 18 ft·lbf)

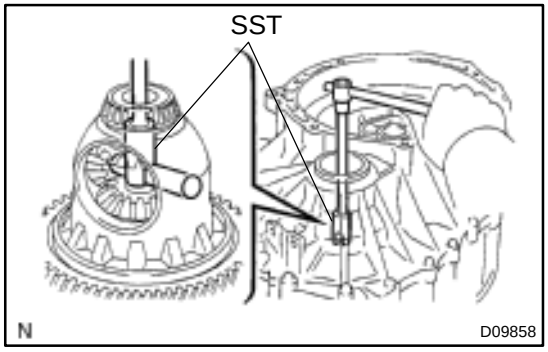

(e) Using SST, rotate the differential case assembly in both directions to make it fit.
SST 09564–32011

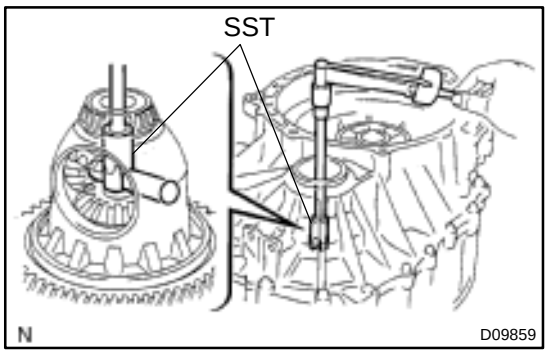

(f) Using SST and a small torque wrench, measure the counter driven gear preload.
SST 09564–32011
Preload (Starting torque):
New bearing
3.81 – 6.10 N·m
(38.85 – 62.20 kgf·cm, 33.72 – 53.99 in.·lbf)
Reused bearing
1.91 – 3.03 N·m
(19.48 – 30.90 kgf·cm, 16.91 – 26.82 in.·lbf)
Preload (Turning torque):
3.29 – 6.66 N·m (60 rpm)
(33.55 – 67.91 kgf·cm, 29.12 – 58.95 in.·lbf)

If the preload is not within the specified range, replace the shim of the counter driven gear LH.

Shim thickness:

Mark	Thickness mm (in.)	Mark	Thickness mm (in.)
1	1.25 (0.0492)	62	1.58 (0.0622)
2	1.28 (0.0504)	63	1.60 (0.0630)
3	1.31 (0.0516)	64	1.62 (0.0638)
50	1.34 (0.0528)	65	1.64 (0.0646)
51	1.36 (0.0535)	66	1.66 (0.0654)
52	1.38 (0.0543)	67	1.68 (0.0661)
53	1.40 (0.0551)	68	1.70 (0.0669)
54	1.42 (0.0559)	69	1.72 (0.0677)
55	1.44 (0.0567)	70	1.74 (0.0685)
56	1.46 (0.0575)	18	1.76 (0.0693)
57	1.48 (0.0583)	19	1.79 (0.0705)
58	1.50 (0.0591)	20	1.82 (0.0717)
59	1.52 (0.0598)	21	1.85 (0.0728)
60	1.54 (0.0606)	22	1.88 (0.0740)
61	1.56 (0.0614)	–	–

HINT:
As a rank of shim thickness is increased (0.020 mm) the preload of approx. 1.1 N·m (11.2 kgf·cm, 9.7 in.·lbf) is increased accordingly.

12. REMOVE 13 BOLTS, SEPARATE MG1 ASSEMBLY AND MG2 ASSEMBLY

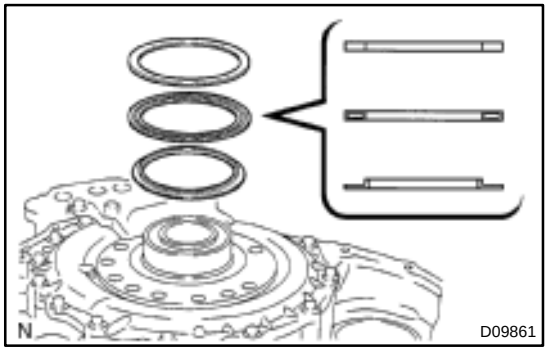

13. ADJUST SHIM

(a) Install the 2 bearing races and needle roller bearing to the MG1 assembly.

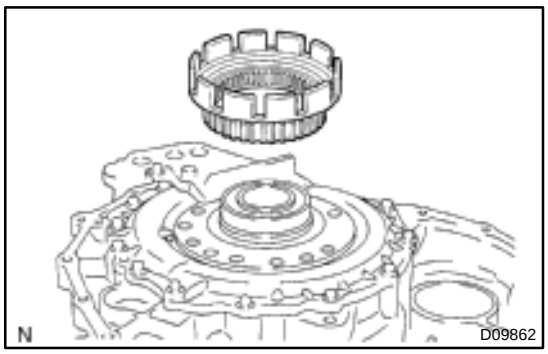

(b) Install the drive sprocket assembly to the MG1 assembly.

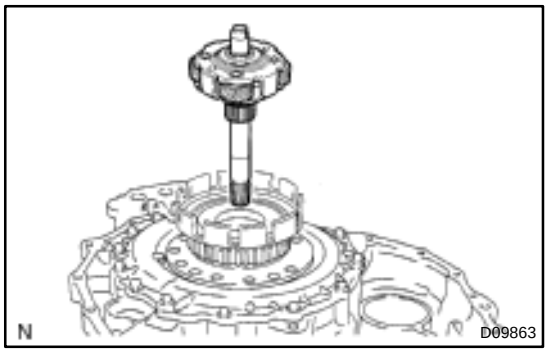

(c) Install the input shaft assembly.

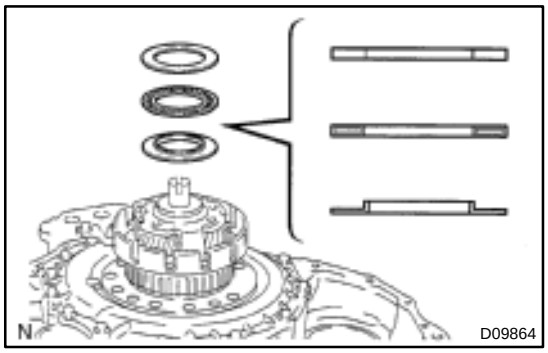

(d) Install the 2 bearing races and needle roller bearing.

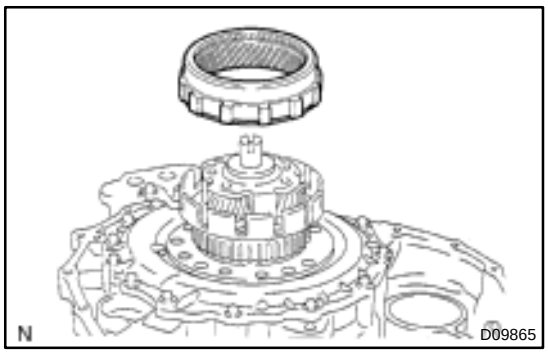

(e) Install the planetary ring gear.

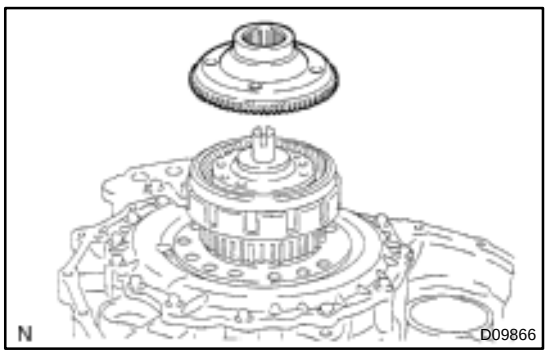

(f) Install the ring gear flange.

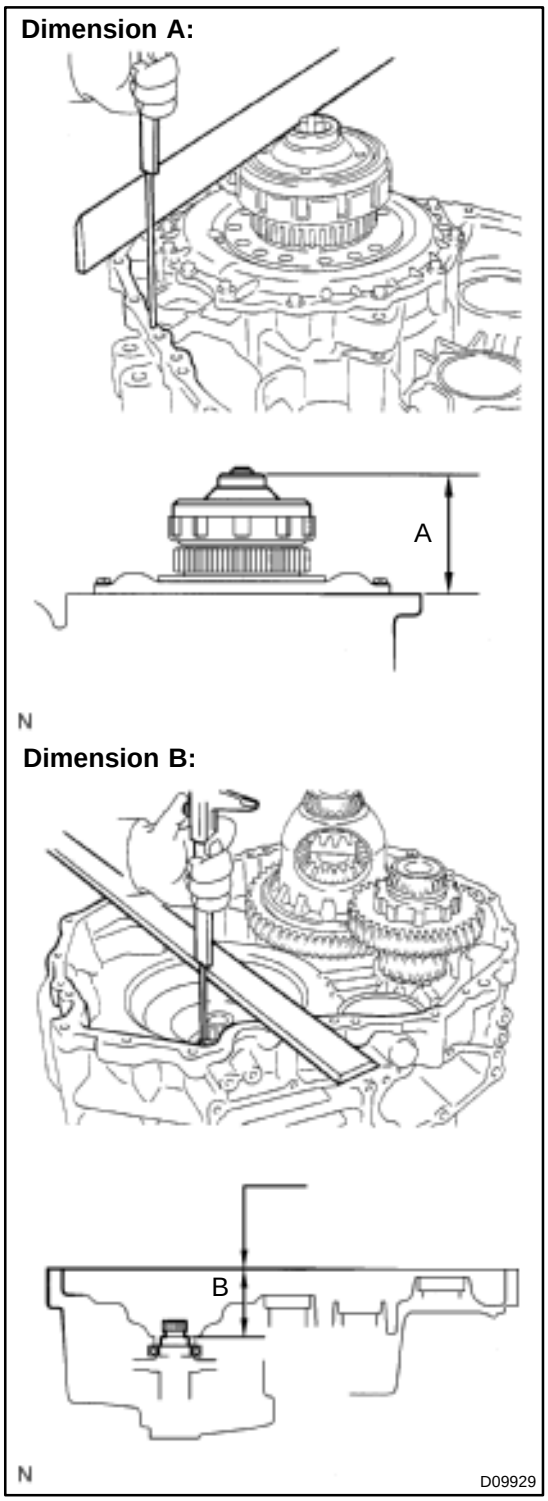

(g) Using a straight edge and vernier calipers, measure the dimension ”A” and ”B” correctly.

(h) Select a shim that will ensure that the value is within the specification.

Shim thickness:

Dimension ”B” – Dimension ”A”

Mark	Thickness mm (in.)	Mark	Thickness mm (in.)
1	1.00 (0.0394)	7	2.20 (0.0866)
2	1.20 (0.0472)	8	2.40 (0.0945)
3	1.40 (0.0551)	9	2.60 (0.1024)
4	1.60 (0.0630)	10	2.80 (0.1102)
5	1.80 (0.0709)	11	3.00 (0.1181)
6	2.00 (0.0787)	12	3.20 (0.1260)

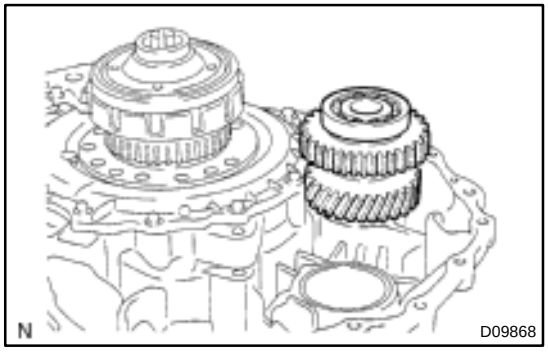

(i) Install the counter drive gear assembly to the MG1 assembly.

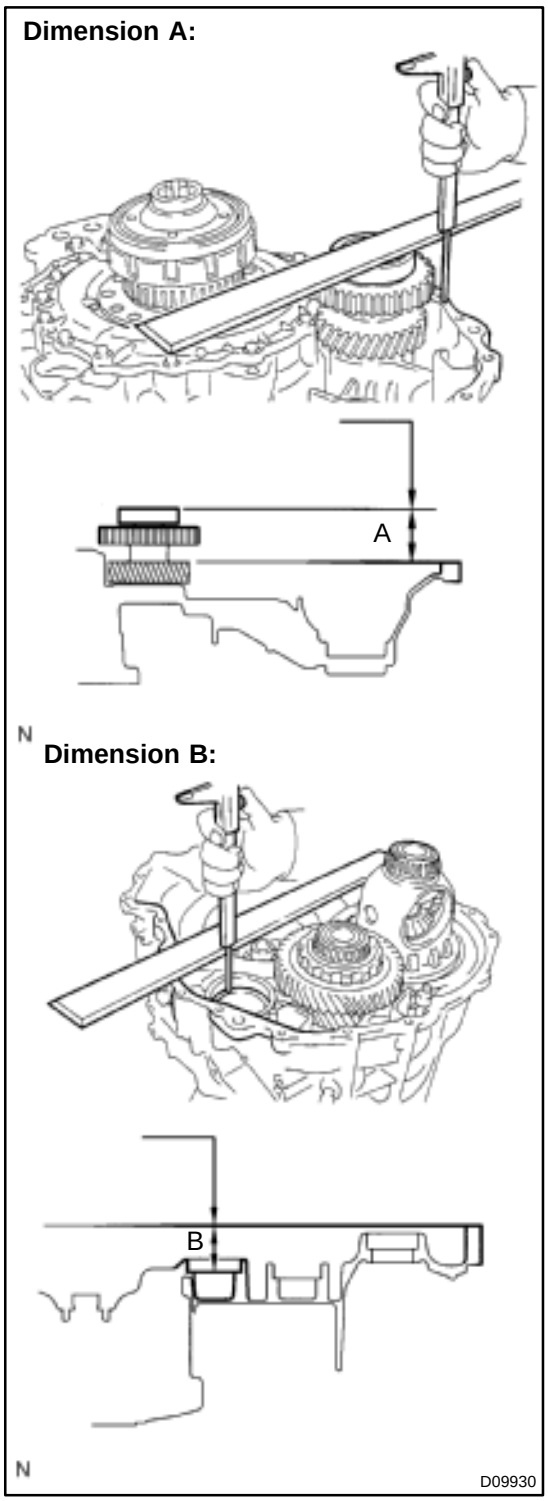

(j) Using a straight edge and vernier calipers, measure the dimension ”A” and ”B” correctly.

(k) Select a shim thickness is surely within the specified range.

Shim thickness:

Dimension ”B” – Dimension ”A”

Mark	Thickness mm (in.)	Mark	Thickness mm (in.)
A	1.35 (0.0531)	G	1.65 (0.0650)
B	1.40 (0.0551)	H	1.70 (0.0669)
C	1.45 (0.0571)	J	1.75 (0.0689)
D	1.50 (0.0591)	K	1.80 (0.0709)
E	1.55 (0.0610)	L	1.85 (0.0728)
F	1.60 (0.0630)	–	–

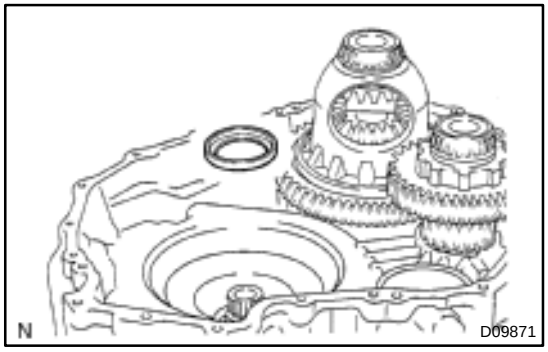

14. INSTALL INPUT SHAFT ASSEMBLY TO MG2 ASSEMBLY

(a) Install the shim selected in step 13 (h).

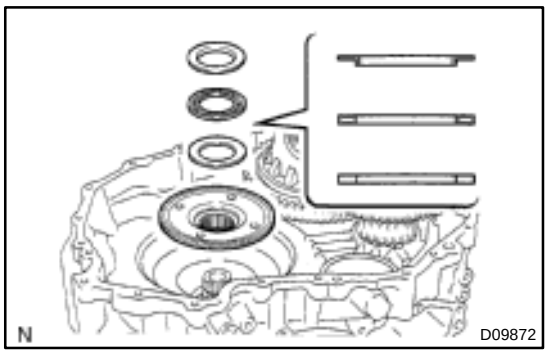

(b) Install the ring gear flange.
(c) Install the 2 races and thrust bearing.

HINT:
Apply ATF to the thrust bearing.

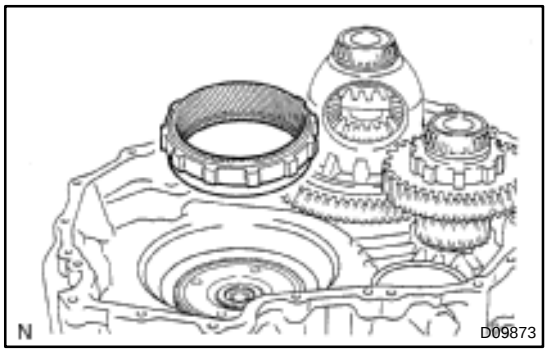

(d) Install the planetary ring gear.

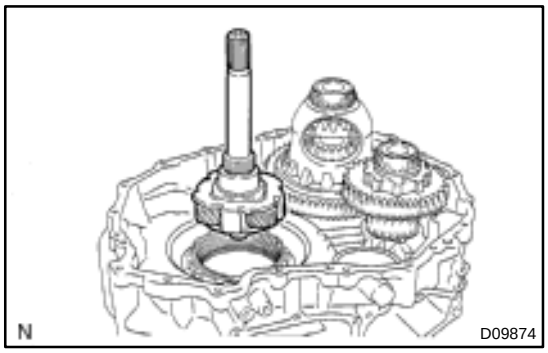

(e) Install the input shaft assembly.

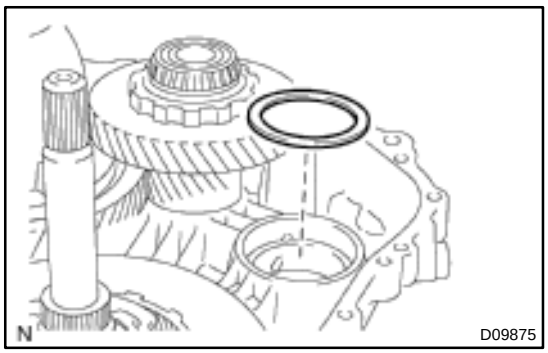

15. INSTALL COUNTER DRIVE GEAR ASSEMBLY, CHAIN AND DRIVE SPROCKET ASSEMBLY

(a) Install the shim selected in step 13 (k).

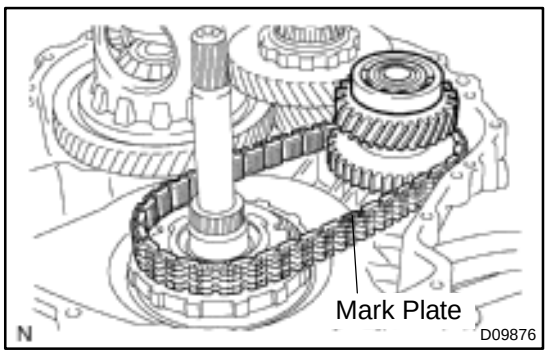

(b) Install the counter drive gear assembly and chain at the same time.

NOTICE:
Install the chain with the mark plate facing up.

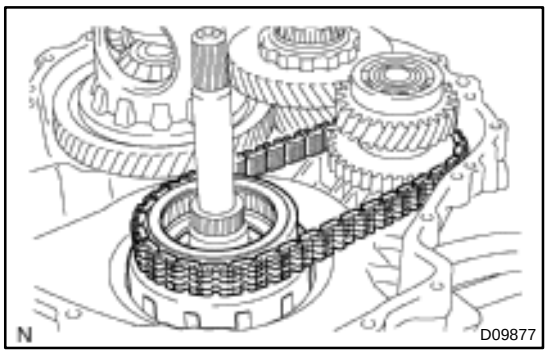

(c) Put the chain on the drive sprocket and install them.
HINT:
Apply ATF to the drive sprocket needle roller bearing.

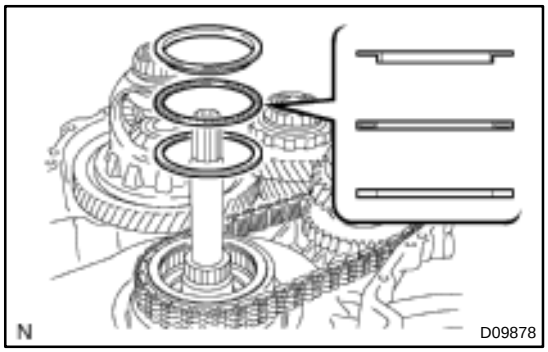

(d) Install the 2 bearing races and needle roller bearing.
HINT:
Apply ATF to the thrust bearing.

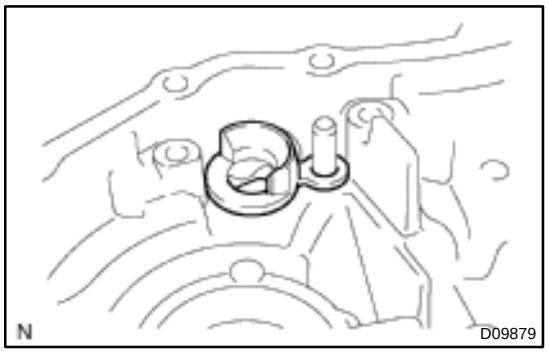

16. INSTALL PARKING LOCK PAWL TO MG1 ASSEMBLY

(a) Install the lock sleeve.

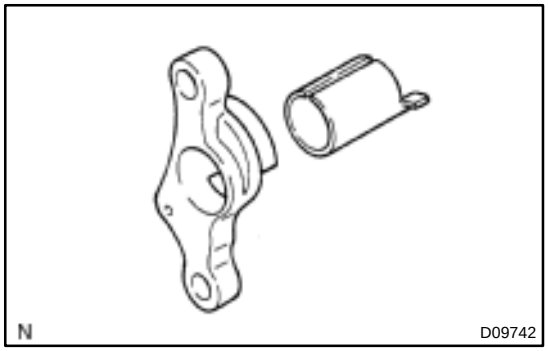

(b) Install the cam guide sleeve to the sleeve bracket.

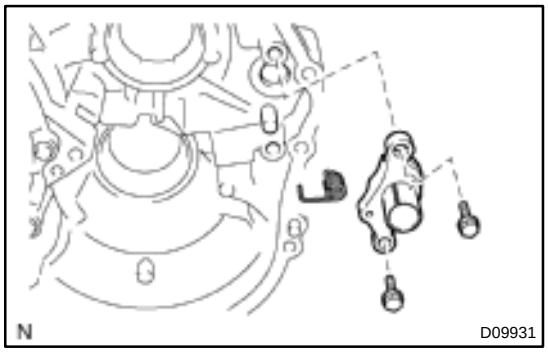

(c) Install the cam guide sleeve, sleeve bracket, torsion spring and 2 bolts.
Torque: 13 N·m (130 kgf·cm, 9 ft·lbf)

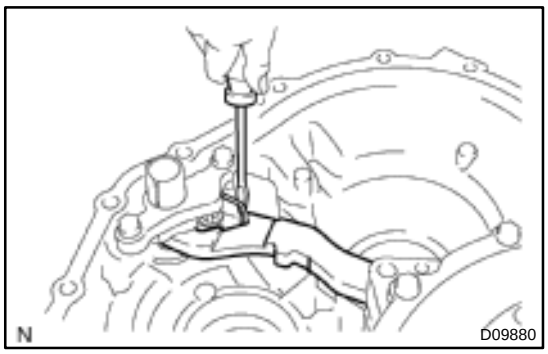

(d) Install the parking lock pawl

(e) Using a screw driver, fit the torsion spring into a cut–out of the parking lock pawl.

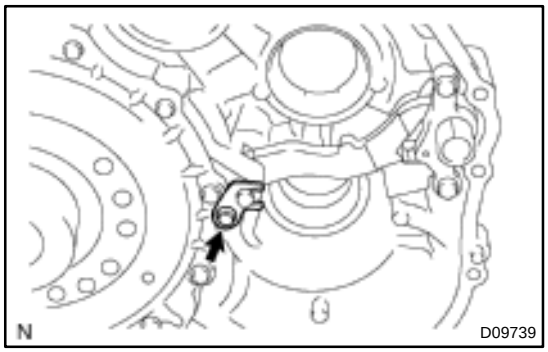

(f) Install the parking lock pawl shaft, lock clamp and bolt.
Torque: 5.4 N·m (55 kgf·cm, 48 in.·lbf)

17. INSTALL OIL PAN (MG2 side)

(a) Install a new O–ring to the oil strainer.

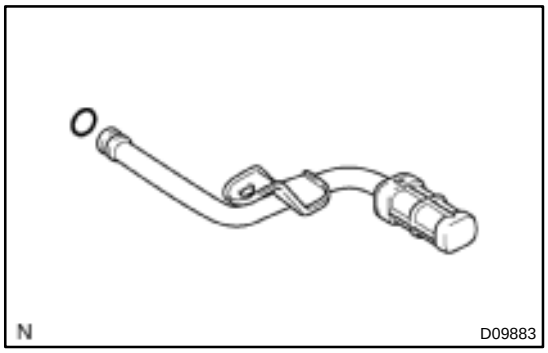

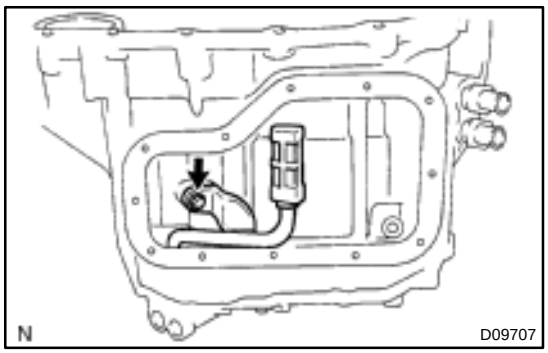

(b) Install the bolt and oil strainer.
Torque: 5.5 N·m (56 kgf·cm, 49 in.·lbf)

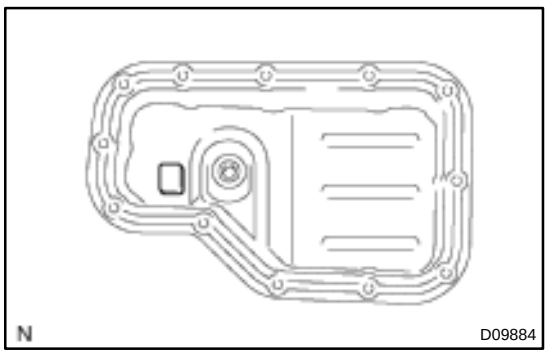

(c) Install the magnet to the oil pan.

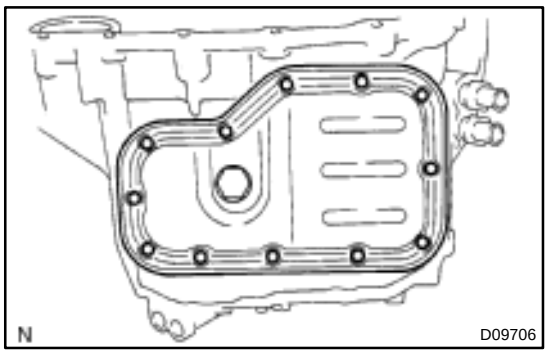

(d) Apply liquid sealer to 2 or 3 threads of the bolt end.
Sealant:
Part No. 08833–00080, THREE BOND 2430, LOCTITE 204 or equivalent

(e) Install a new gasket and the oil pan with the 12 bolts.
Torque: 7.6 N·m (77 kgf·cm, 67 in.·lbf)

(f) Install a new gasket and drain plug.
Torque: 49 N·m (498 kgf·cm, 36 ft·lbf)

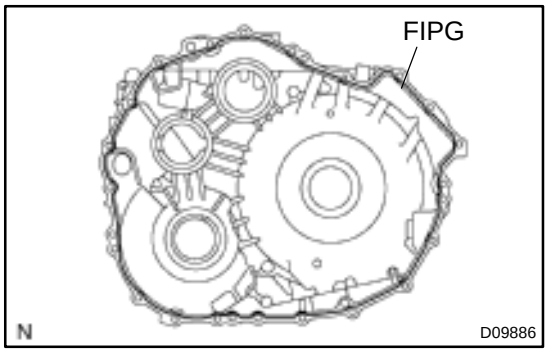

18. INSTALL MG1 ASSEMBLY TO MG2 ASSEMBLY

(a) Apply FIPG to the MG2 assembly as shown in the illustration.
FIPG:
Part No. 08826 – 00090, THREE BOND 1281 or equivalent

(b) Install the MG1 to the MG2 (See page HT–26).

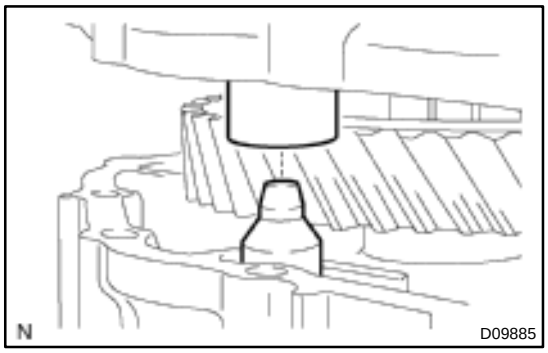

NOTICE:
When putting MG2 and MG1 together, assemble them so that the parking rod is inserted into the cam guide sleeve.

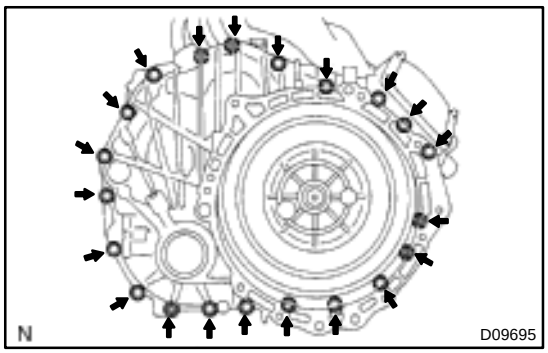

(c) Apply liquid sealer to 2 or 3 threads of the bolt end.
Sealant:
Part No. 08833 – 00080, THREE BOND 1344, LOCTITE 242 or equivalent

(d) Install the 21 bolts.
Torque: 25 N·m (250 kgf·cm, 18 ft·lbf)

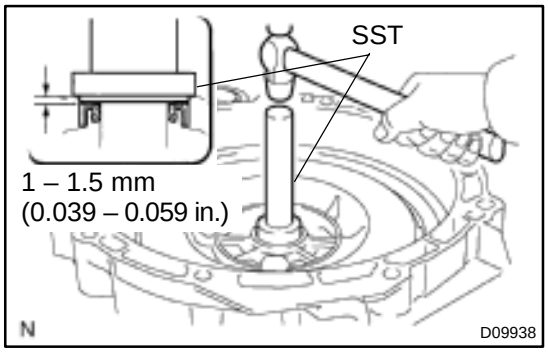

19. INSTALL OIL SEAL OF INPUT SHAFT (MG1 side)

(a) Using SST and a hammer, install a new oil seal.
SST 09388–40010
Oil seal depth: 1 – 1.5 mm (0.039 – 0.059 in.)

HINT:
Drive in the oil seal unit SST comes into contact with the case.

(b) Coat the lip of the oil seal with MP grease.

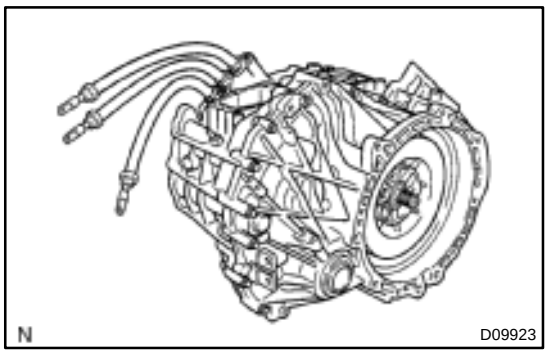

20. SET HYBRID TRANSAXLE ASSEMBLY

Set the hybrid transaxle assembly as shown in the illustration.

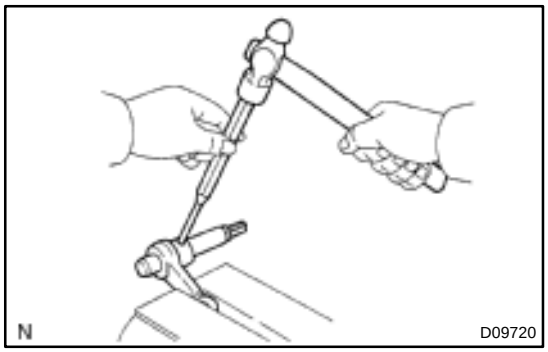

21. REASSEMBLE PARKING LOCK SHAFT ASSEMBLY

(a) Install the parking lock lever No. 3 to the parking lock shaft.

(b) Using a pin punch and a hammer, drive in the pin.

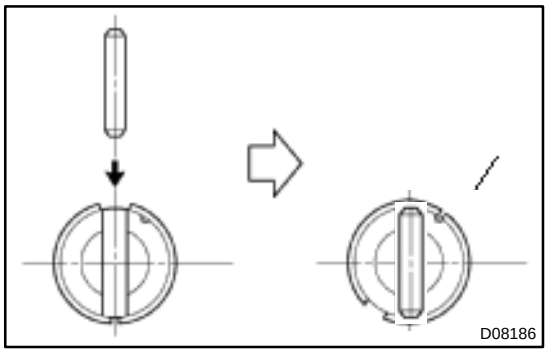

(c) Turn the spacer and the lever shaft to align the small hole in the spacer with the staking position mark on the lever shaft.

(d) Using a pin punch, stake the spacer through the small hole.

(e) Check that the spacer does not turn.

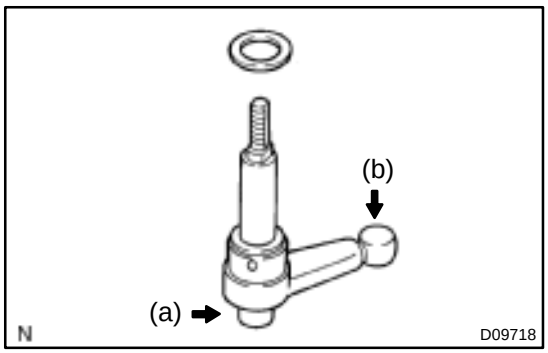

22. INSTALL PARKING LOCK SHAFT ASSEMBLY AND WASHER

(a) Apply ATF to the parking lock shaft.

(b) Apply MP grease to the parking lock lever No. 3.

(c) Install the washer to the parking lock shaft assembly.

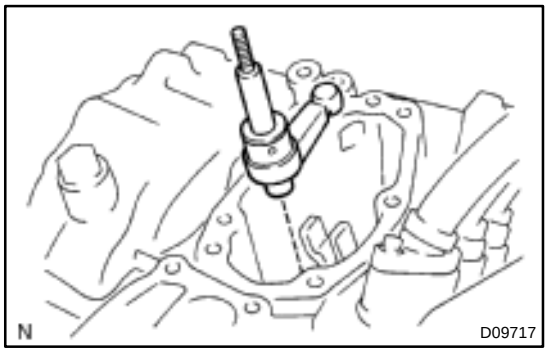

23. INSTALL PARKING LOCK SHAFT ASSEMBLY

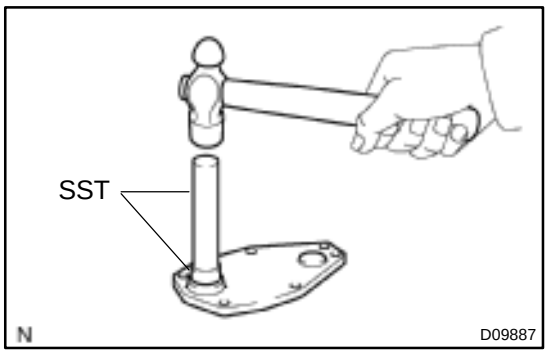

(a) Using SST and a hammer, install a new oil seal to the parking shaft cover.
SST 09950–60010 (09951–00230), 09950–70010 (09951–07100)

(b) Coat the lip of the oil seal with MP grease.

(c) Remove any old packing (FIPG) material and be careful not to drop any oil on the contact surfaces of the parking shaft cover and MG2 case.
- Using a razor blade and gasket scraper, remove all the old packing (FIPG) material from the gasket surfaces and sealing grooves.
- Thoroughly clean all components to remove all the loose material.
- Using a non–reusable solvent, clean both sealing surfaces.

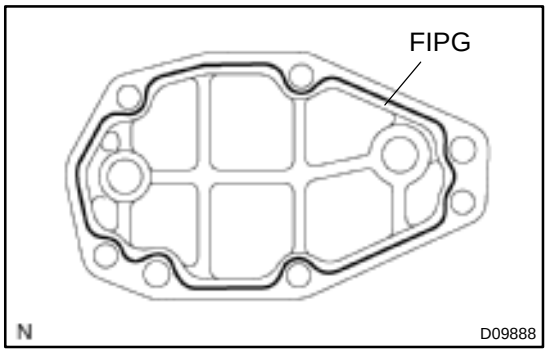

(d) Apply FIPG to the parking shaft cover as shown in the illustration.
FIPG:
Part No. 08826 – 00090, THREE BOND 1281 or equivalent
- Install a nozzle that has been cut to a 1.5 mm (0.06 in.) opening.
- Parts must be assembled within 10 minutes after application. Otherwise the material must be removed and reapplied.
- Remove the nozzle from the tube and reinstall the cap.

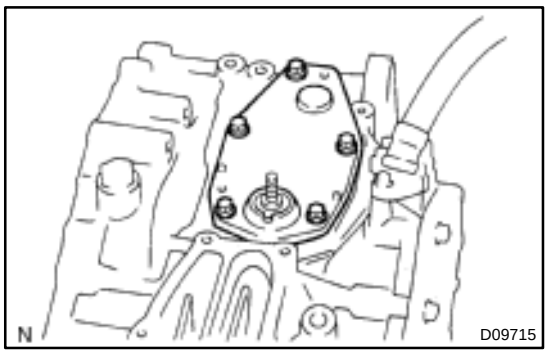

(e) Install the 5 bolts and parking shaft cover.
Torque: 13 N·m (130 kgf·cm, 10 ft·lbf)

NOTICE:
When installing the cover, be careful not to damage the lip of the oil seal.

24. INSTALL MOTOR WATER JACKET COVER

(a) Remove any old packing (FIPG) material and be careful not to drop any oil on the contact surfaces of the motor water jacket cover and MG2 case.
- Using a razor blade and gasket scraper, remove all the old packing (FIPG) material from the gasket surfaces and sealing grooves.
- Thoroughly clean all components to remove all the loose material.
- Using a non–reusable solvent, clean both sealing surfaces.

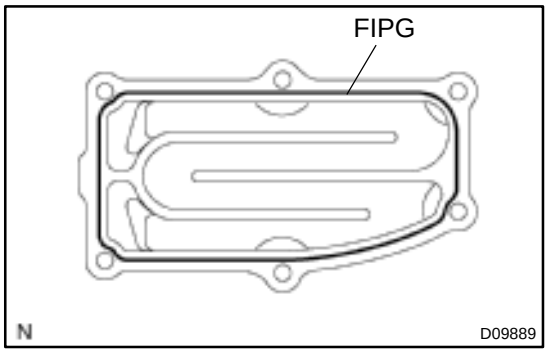

(b) Apply FIPG to the motor water jacket cover as shown in the illustration.
FIPG:
Part No. 08826–00080 or equivalent
- Install a nozzle that has been cut to a 1.5 mm (0.06 in.) opening.
- Parts must be assembled within 10 minutes after application. Otherwise the material must be removed and reapplied.
- Remove the nozzle from the tube and reinstall the cap.

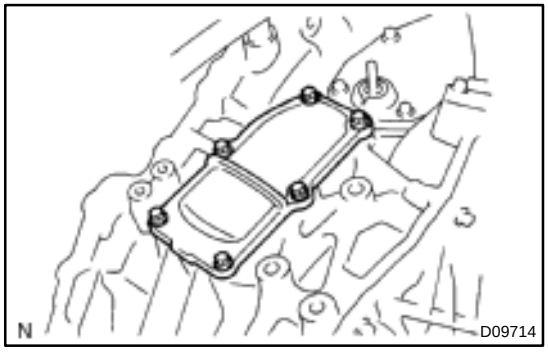

(c) Apply liquid sealer to 2 or 3 threads of the bolt end.
Sealant:
Part No. 08833 – 00080, THREE BOND 1344, LOCTITE 242 or equivalent

(d) Install the motor water jacket cover with the 6 bolts.
Torque: 5.5 N·m (56 kgf·cm, 49 in.·lbf)

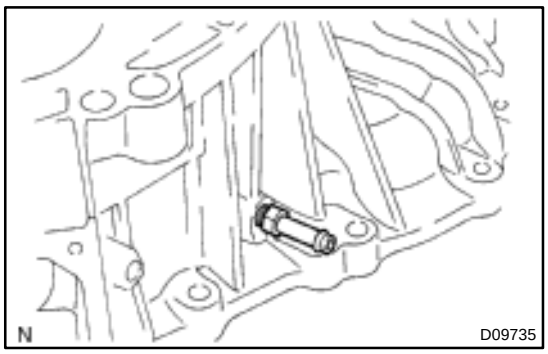

25. INSTALL HOUSING TUBE

(a) Apply liquid sealer to 2 or 3 threads of the housing tube end.
Sealant:
Part No. 08833 – 00080, THREE BOND 1344, LOCTITE 242 or equivalent

(b) Install the housing tube.
Torque: 15 N·m (152 kgf·cm, 11 ft·lbf)

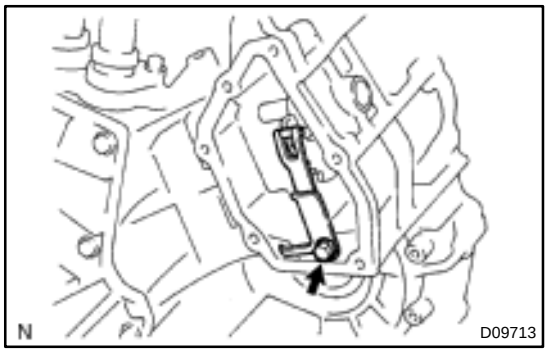

26. INSTALL PARKING COVER

(a) Install the detent spring and detent spring cover with the bolt.
Torque: 10 N·m (100 kgf·cm, 7 ft·lbf)

(b) Remove any old packing (FIPG) material and be careful not to drop any oil on the contact surfaces of the parking cover and MG2 case.
- Using a razor blade and gasket scraper, remove all the old packing (FIPG) material from the gasket surfaces and sealing grooves.
- Thoroughly clean all components to remove all the loose material.
- Using a non–reusable solvent, clean both sealing surfaces.

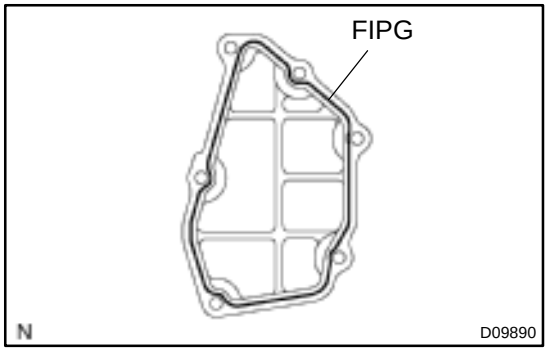

(c) Apply seal packing to the parking cover as shown in the illustration.
FIPG:
Part No. 08826 – 00090, THREE BOND 1281 or equivalent
- Install a nozzle that has been cut to a 1.5 mm (0.06 in.) opening.
- Parts must be assembled within 10 minutes after application. Otherwise the material must be removed and reapplied.
- Remove the nozzle from the tube and reinstall the cap.

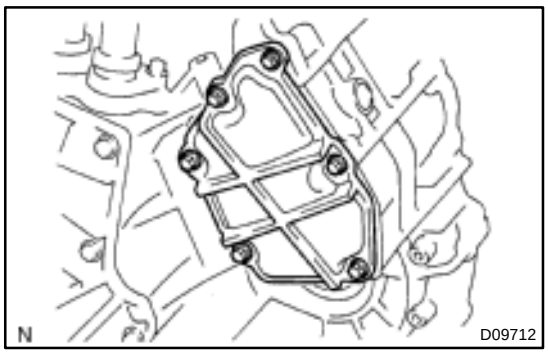

(d) Install the parking cover with the 6 bolts.
Torque: 5.5 N·m (56 kgf·cm, 49 in.·lbf)

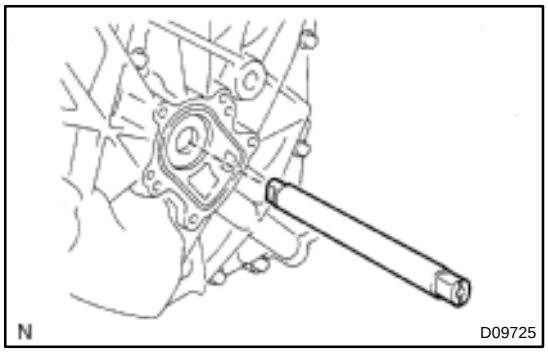

27. INSTALL OIL PUMP

(a) Apply ATF to individual sliding parts.

(b) Install the oil pump drive shaft.

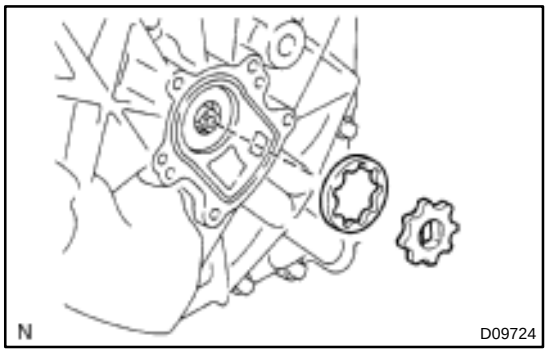

(c) Install the oil pump driven rotor and drive rotor.

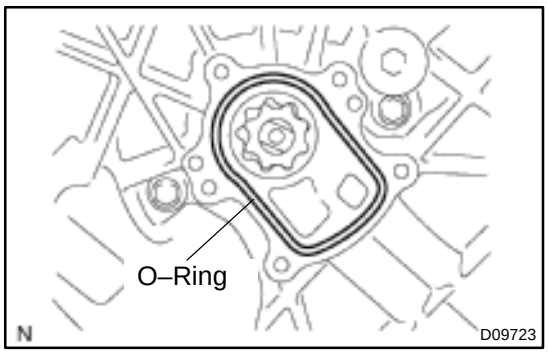

(d) Install a new O–ring without twisting it..

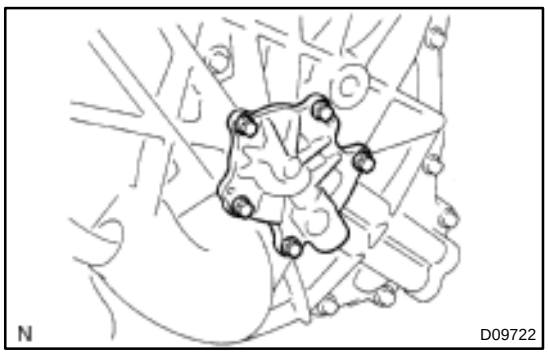

(e) Apply liquid sealer to 2 or 3 threads of the bolt end.
Sealant:
Part No. 08833 – 00080, THREE BOND 1344, LOCTITE 242 or equivalent

(f) Install the oil pump cover with the 5 bolts.
Torque: 5.5 N·m (56 kgf·cm, 49 in.·lbf)

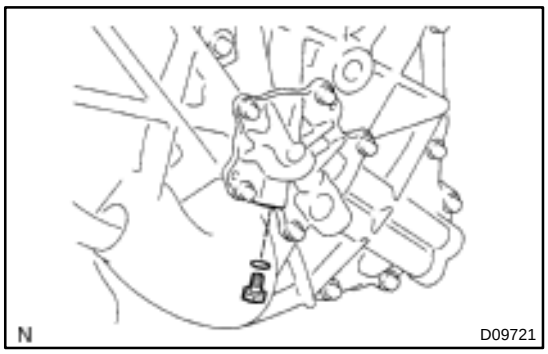

(g) Install a new O–ring to the plug.
(h) Install the plug.
Torque: 7.35 N·m (75 kgf·cm, 65 in.·lbf)

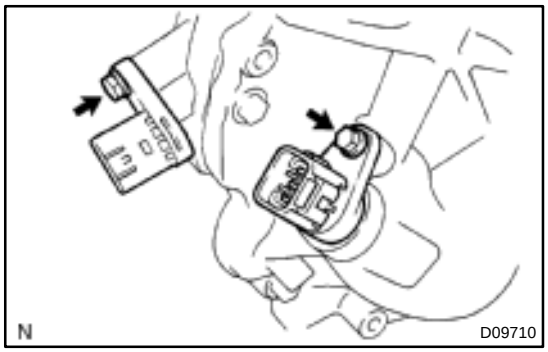

28. INSTALL WIRING HARNESS CONNECTOR (MG2 side)
Install the 2 wiring harness connectors with the 2 bolts.
Torque: 5.5 N·m (56 kgf·cm, 49 in.·lbf)

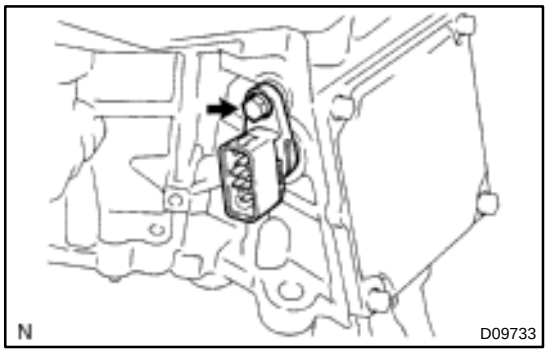

29. INSTALL WIRING HARNESS CONNECTOR (MG1 side)
Install the wiring harness connector with the bolt.
Torque: 5.5 N·m (56 kgf·cm, 49 in.·lbf)

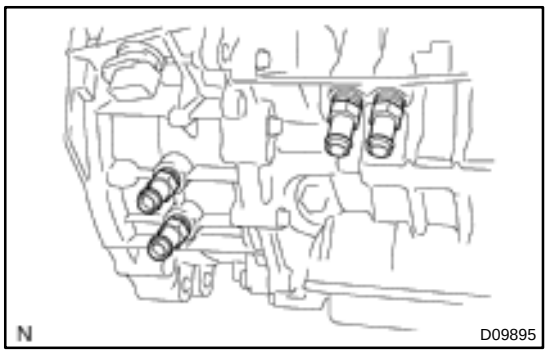

30. INSTALL 4 WATER JACKET UNIONS
(a) Apply liquid sealer to 2 or 3 threads of the union end.
Sealant:
Part No. 08833 – 00080, THREE BOND 1344, LOCTITE 242 or equivalent
(b) Install the 4 water jacket unions.
Torque: 50 N·m (510 kgf·cm, 37 ft·lbf)

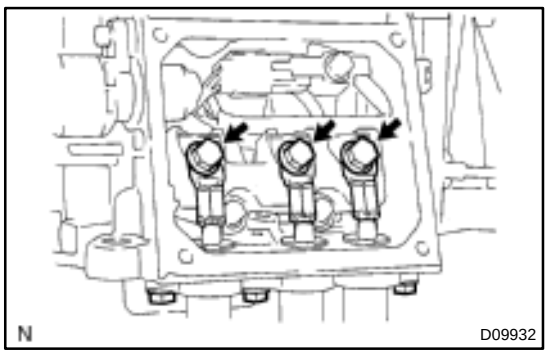

31. INSTALL HIGH–VOLTAGE CABLE
(a) Install the high–voltage cable with the 3 bolts.
Torque: 18 N·m (183 kgf·cm, 13 ft·lbf)

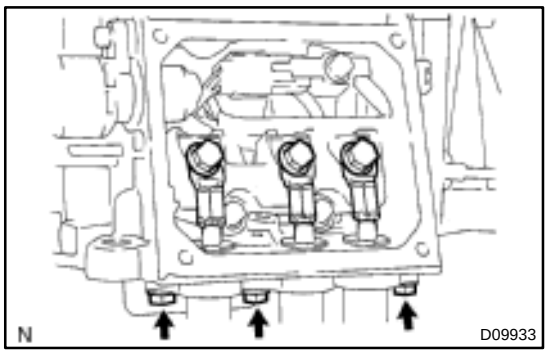

(b) Apply liquid sealer to 2 or 3 threads of the bolt end.
Sealant:
Part No. 08833 – 00080, THREE BOND 1344, LOCTITE 242 or equivalent

(c) Install the 3 bolts.
Torque: 5.5 N·m (56 kgf·cm, 49 in.·lbf)

(d) Remove any old packing (FIPG) material and be careful not to drop any oil on the contact surfaces of the power cable cover and MG1 case.
- Using a razor blade and gasket scraper, remove all the old packing (FIPG) material from the gasket surfaces and sealing grooves.
- Thoroughly clean all components to remove all the loose material.
- Using a non–reusable solvent, clean both sealing surfaces.

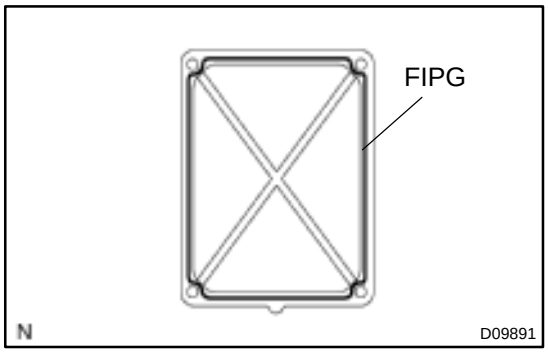

(e) Apply FIPG to the power cable cover as shown in the illustration.
FIPG:
Part No. 08826 –00090, THREE BOND 1281 or equivalent
- Install the nozzle that has been cut to a 1.5 mm (0.06 in) opening.
- Parts must be assembled within 10 minutes after application. Otherwise the material must be removed and reapplied.
- Remove the nozzle from the tube and reinstall the cap.

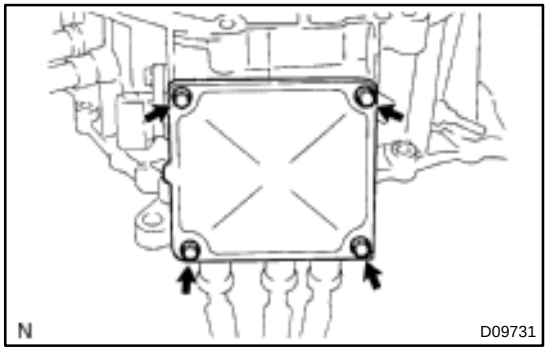

(f) Install the power cable cover with the 4 bolts.
Torque: 4.8 N·m (48 kgf·cm, 42 in.·lbf)

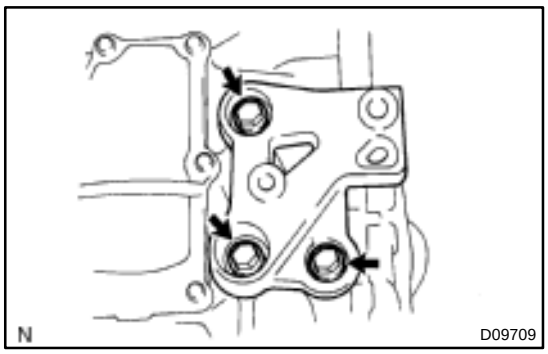

32. INSTALL MOUNTING BRACKET

(a) Apply liquid sealer to 2 or 3 threads of the bolt end.
Sealant:
Part No. 08833 – 00070, THREE BOND 1324 or equivalent

(b) Install the mounting bracket with the 3 bolts.
Torque: 52 N·m (530 kgf·cm, 38 ft·lbf)

HT00J–02

INSPECTION

1. INSPECT SHIFT POSITION SENSOR

(a) Remove the steering column upper cover and lower cover.

(b) Disconnect the shift position sensor connector.

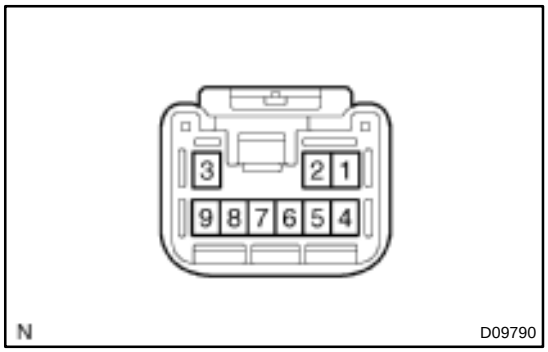

(c) Check continuity between terminals shown below when the shift lever is moved to each position

Shift Position	Terminal No. to continuity	Terminal No. to continuity
P	1 – 2	3 – 8 – 9
R	1 – 4	3 – 8 – 9
N	1 – 5	3 – 8 – 9
D	1 – 6	3 – 8 – 9
B	1 – 7	3 – 8 – 9

(d) Connect the shift position sensor connector.

(e) Install the steering column upper cover and lower cover.

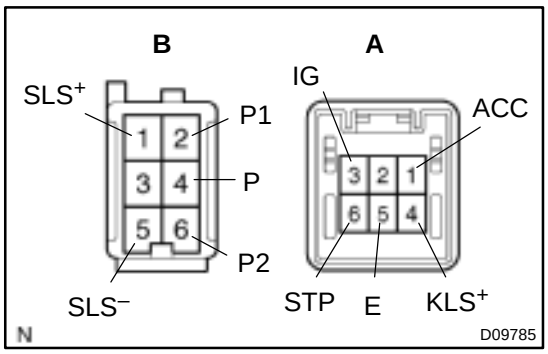

2. INSPECT SHIFT LOCK CONTROL ECU

Using a voltmeter, measure the voltage at each terminal.

HINT:

Do not disconnect the ECU connector.

Terminal	Measuring Condition	Voltage (V)
A, 1 – A, 5 (ACC – E)	Ignition switch ACC	10 – 14
A, 3 – A, 5 (IG – E)	Ignition switch ON	10 – 14
A, 6 – A, 5 (STP – E)	Depressing brake pedal	10 – 14
A, 4 – A, 5 (KLS^+ – E)	5. Ignition switch ACC and P position 6. Ignition switch ACC and except P position 7. Ignition switch ACC and except P position (After approx. 1 second)	0 7.5 – 11 6 – 9.5
B, 1 – B, 5 (SLS^+ – $SLS^–$)	1. Ignition switch ON and P position 2. Depress brake pedal 3. Except P position	0 8 – 13.5 0
B, 2 – B, 4 (P1 – P)	1. Ignition switch ON, P position and depress brake pedal 2. Shift except P position under conditions above	0 9 – 13.5
B, 6 – B, 4 (P2 – P)	1. Ignition switch ACC, P position 2. Shift except P position under conditions above	9 – 13.5 0

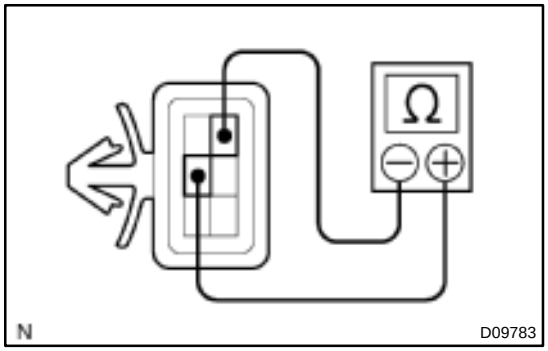

3. INSPECT SHIFT LOCK SOLENOID

(a) Disconnect the solenoid connector.

(b) Using an ohmmeter, measure the resistance between terminals.

Standard resistance: 29 – 35 Ω

If the resistance value is not as specified, replace the solenoid.

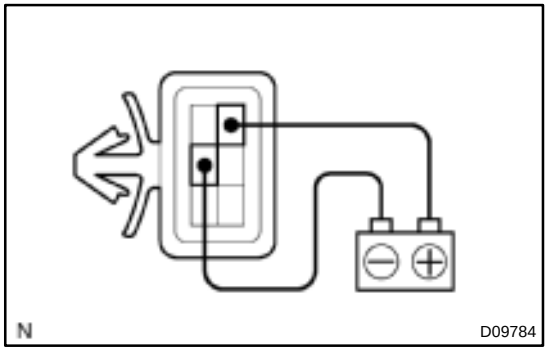

(c) Apply battery positive voltage between terminals. Check the operation.

If the solenoid does not operate, replace the solenoid noise can be heard from the solenoid.

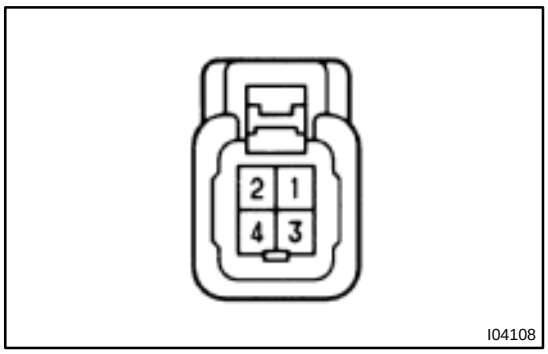

4. INSPECT KEY INTERLOCK SOLENOID

(a) Disconnect the solenoid connector.

(b) Using an ohmmeter, measure the resistance between terminals 3 and 4.

Standard resistance: 12.5 – 16.5 Ω

If the resistance value is not as specified, replace the solenoid.

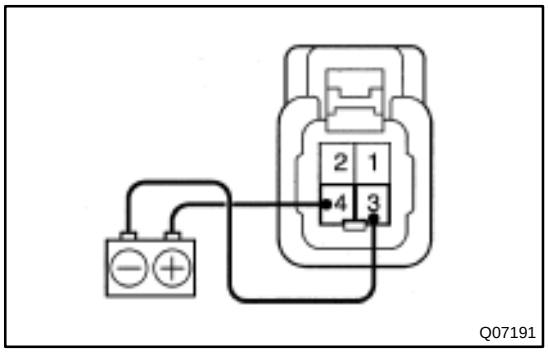

(c) Apply battery positive voltage between the terminals 3 and 4. Check that an operation sound can be heard from the solenoid.

If the solenoid does not operate, replace the solenoid.

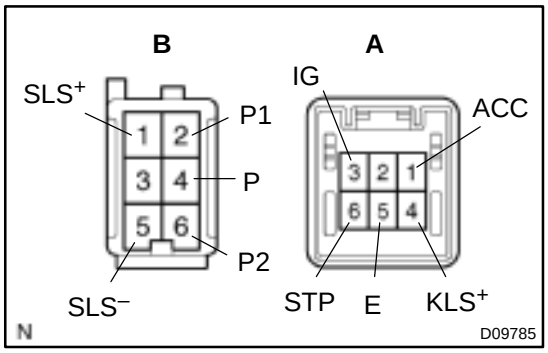

5. INSPECT SHIFT LOCK CONTROL SWITCH

Check that there is continuity between terminals.

Shift position	Tester connection	Standard
P position	A, 5 – B, 2 (E – P1)	Continuity
P position (Pull the shift lever toward you)	A, 5 – B, 2 (E – P1) A, 5 – B, 6 (E – P2)	Continuity
R, N, D, 2, L position	A, 5 – B, 6 (E – P2)	Continuity

If continuity is not identified, replace the switch.

HT00R–02

REASSEMBLY

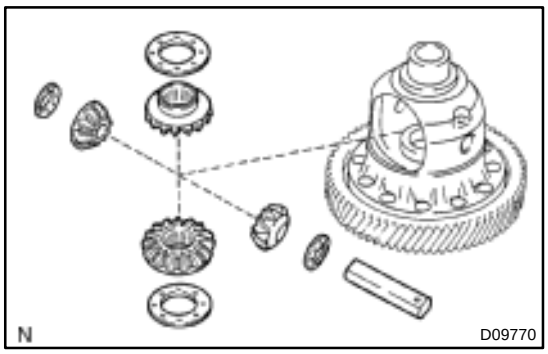

1. ASSEMBLE DIFFERENTIAL CASE

(a) Coat the 2 side gear thrust washers and 2 pinion thrust washers with ATF.

(b) Install the 2 side gears, 2 pinions and 4 thrust washers to the case.

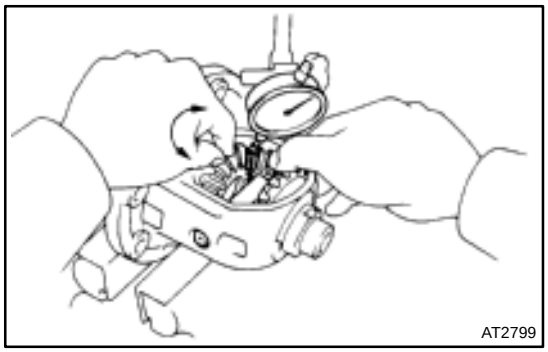

(c) Check the side gear backlash.
Measure the side gear backlash while pushing one pinion gear toward the case.
Standard backlash:
0.05 – 0.20 mm (0.0020 – 0.0079 in.)
Referring to the table below, select thrust washers which backlash is surely within the specified range. Select washers of the same size for both sides.

Thrust washer thickness

Thickness	Thickness
0.95 mm (0.0374 in.)	1.10 mm (0.0433 in.)
1.00 mm (0.0394 in.)	1.15 mm (0.0453 in.)
1.05 mm (0.0414 in.)	1.20 mm (0.0472 in.)

If the backlash is not within the specified range, install a thrust washer of a different thickness.

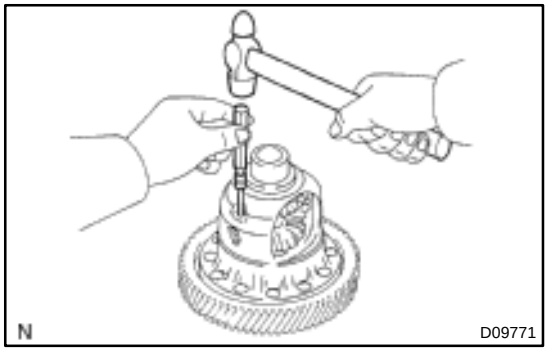

(d) Using a pin punch and a hammer, install the straight pin.

(e) Stake the differential case.

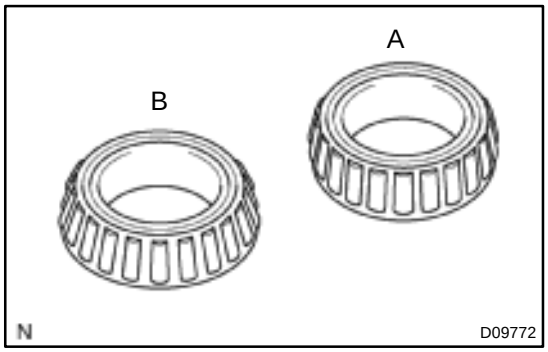

2. INSTALL 2 TAPERED ROLLER BEARINGS

CAUTION:

A: The one which has bigger rollers
(The number of rollers is 22.)

B: The one which has smaller rollers
(The number of rollers is 24.)

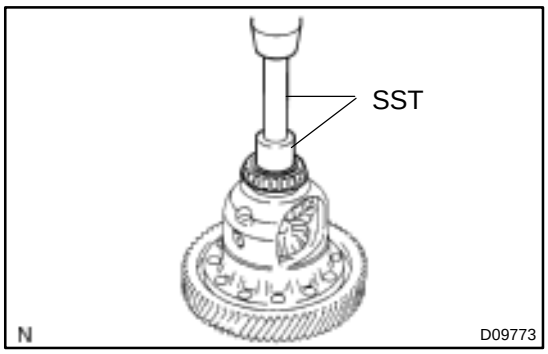

(a) Using SST and a press, press in the tapered roller bearing RH. (Bearing B)
SST 09710–22021 (09710–01031), 09950–70010 (09951–07100)

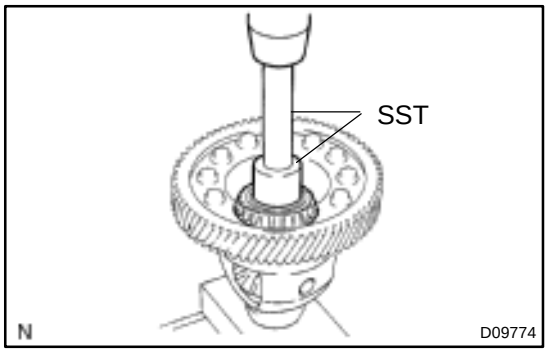

(b) Using SST and a press, press in the tapered roller bearing LH. (Bearing A)
SST 09710–22021 (09710–01031), 09950–70010 (09951–07100)

TIRE AND WHEEL

SA0CC–10

INSPECTION

1. INSPECT TIRE

(a) Check the tires for wear and proper inflation pressure.

Cold tire inflation pressure:

(Tire size: P175/65R14 84S)

Front	Rear
240 kPa (2.4 kgf/cm^2, 35 psi)	230 kPa (2.3 kgf/cm^2, 33 psi)

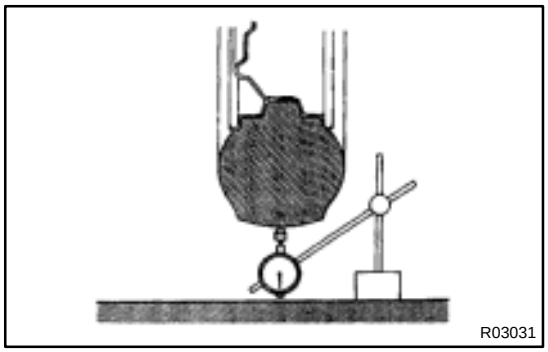

(b) Using a dial indicator, check the tire runout.

Tire runout: 1.0 mm (0.039 in.) or less

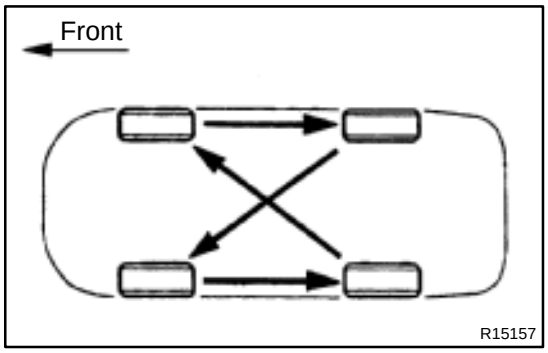

2. ROTATING TIRES

HINT:

See the illustration for where to rotate each tire.

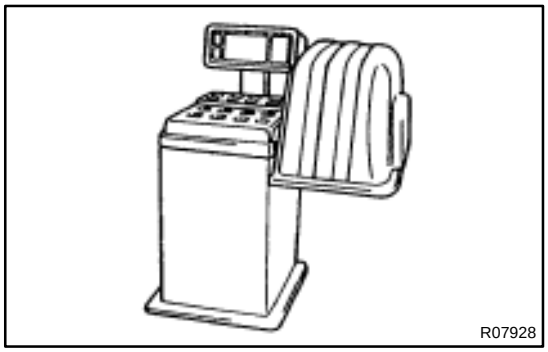

3. INSPECT WHEEL BALANCE

(a) Check and adjust the Off–the–car balance.

(b) If necessary, check and adjust the On–the–car balance.

Imbalance after adjustment: 8.0 g (0.018 lb) or less

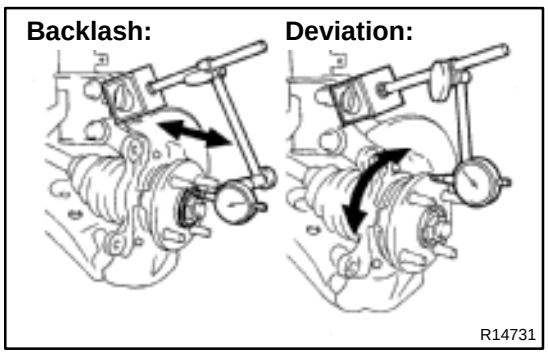

4. CHECK WHEEL BEARING LOOSENESS

(a) Using a dial indicator, check the backlash near the center of the axle hub.

Maximum: 0.05 mm (0.0020 in.)

If the backlash exceeds the maximum, replace the bearing.

(b) Using a dial indicator, check the deviation at the surface of the axle hub outside the hub bolt.

Maximum: 0.07 mm (0.0028 in.)

If the deviation exceeds the maximum, replace the axle hub.

5. CHECK FRONT SUSPENSION FOR LOOSENESS

6. CHECK STEERING LINKAGE FOR LOOSENESS

7. CHECK BALL JOINT FOR LOOSENESS

8. CHECK SHOCK ABSORBER WORKS PROPERLY

- Check if oil leaks
- Check mounting bushings for wear
- Bounce front and rear of the vehicle

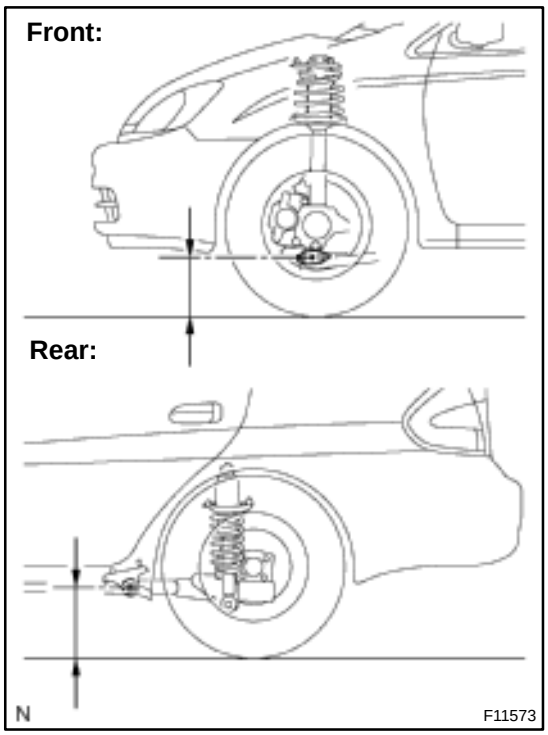

FRONT WHEEL ALIGNMENT

SA1CK–11

INSPECTION

1. MEASURE VEHICLE HEIGHT

Vehicle height:

Tire size	Front*1 mm (in.)	Rear*2 mm (in.)
175/65R14	191 (7.52)	239 (9.41)

*1: Front measuring point

Measure the distance from the ground to the head center of the front side lower suspension arm mounting bolt.

*2: Rear measuring point

Measure the distance from the ground to the center of the rear axle beam mounting bolt.

NOTICE:

Before inspecting the wheel alignment, adjust the vehicle height to the specified value.

If the vehicle height is not the specified value, try to adjust it by pushing down on or lifting the body.

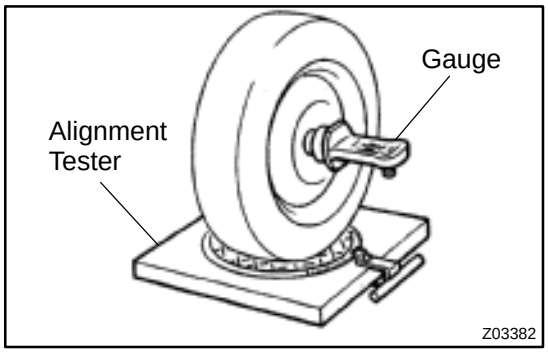

2. INSTALL CAMBER–CASTER–KINGPIN GAUGE OR POSITION VEHICLE ON WHEEL ALIGNMENT TESTER

Follow the specific instructions of the equipment manufacturer.

3. INSPECT CAMBER, CASTER AND STEERING AXIS INCLINATION

Camber, caster and steering axis inclination:

Camber	–0°26' ± 45' (–0.43° ± 0.75°)
Right–left error	45' (0.75°) or less
Caster	1°02' ± 45' (1.03° ± 0.75°)
Right–left error	45' (0.75°) or less
Steering axis inclination	9°52' ± 45' (9.87° ± 0.75°)
Right–left error	45' (0.75°) or less

If the caster and steering axis inclination are not within the specified values, after the camber has been correctly adjusted, recheck the suspension parts for damaged and/or worn out parts.

4. ADJUST CAMBER

NOTICE:

After the camber has been adjusted, inspect the toe–in.

(a) Remove the front wheel.

(b) Remove the 2 nuts on the lower side of the shock absorber.

If reusing the bolts and/or nuts, coat the threads of nuts with engine oil.

(c) Clean the installation surfaces of the shock absorber and the steering knuckle.

(d) Temporarily install the 2 nuts.

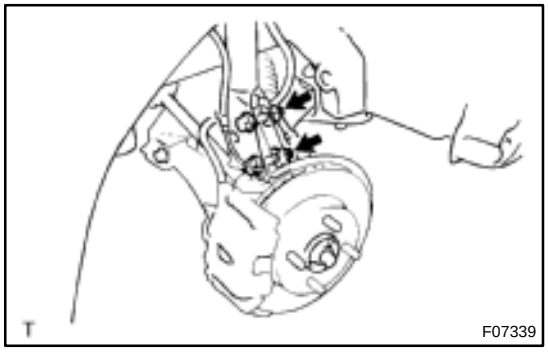

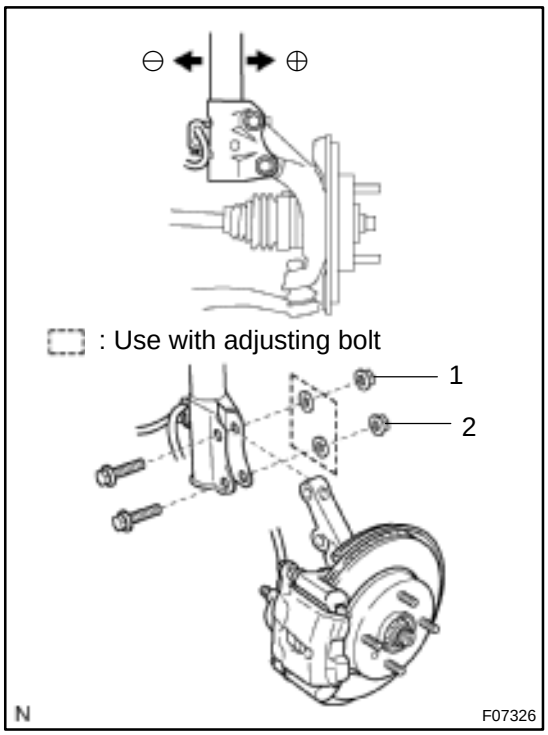

(e) Adjust the camber by pushing or pulling the lower side of the shock absorber in the direction in which the camber adjustment is required.

(f) Tighten the nuts.
Torque: 153 N·m (1,560 kgf·cm, 113 ft·lbf)

(g) Install the front wheel.
Torque: 103 N·m (1,050 kgf·cm, 76 ft·lbf)

(h) Check the camber.

HINT:

- Try to adjust the camber to the center of the specified value.
- Adjusting value for the set bolts is 6’ – 30’ (0.1˚ – 0.5˚).

If the camber is not within the specified value, using the following table, estimate how much additional camber adjustment will be required, and select the camber adjusting bolt.

NOTICE:

Tighten the adjusting bolt with a washer and a new nut.

Bolt / Adjusting Value	Set Bolt		Adjusting Bolt					
	90105–15001		90105–15004		90105–15005		90105–15006	
			1 Dot		2 Dots		3 Dots	
	1	2	1	2	1	2	1	2
–1˚30’ – –1˚15’							●	●
–1˚15’ – –1˚00’					●			●
–1˚00’ – –45’			●					●
–45’ – –30’	●							●
–30’ – –15’	●					●		
–15’ – 0’	●			●				
0’ – 15’	●			●				
15’ – 30’	●					●		
30’ – 45’	●							●
45’ – 1˚00’			●					●
1˚00’ – 1˚15’					●			●
1˚15’ – 1˚30’							●	●

N
F12938

(i) Do the steps mentioned above again. At step (b), replace 1 or 2 selected bolts.

HINT:

When replacing the 2 bolts, replace 1 bolt for each time.

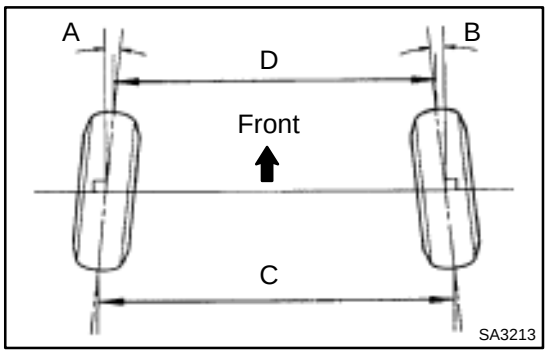

5. INSPECT TOE–IN

Toe–in:

Toe–in (total)	A + B: 0°06' ± 12' (0.1° ± 0.2°) C – D: 1 ± 2 mm (0.04 ± 0.08 in.)

If the toe–in is not within the specified value, adjust it at the rack ends.

6. ADJUST TOE–IN

(a) Remove the rack boot set clips.

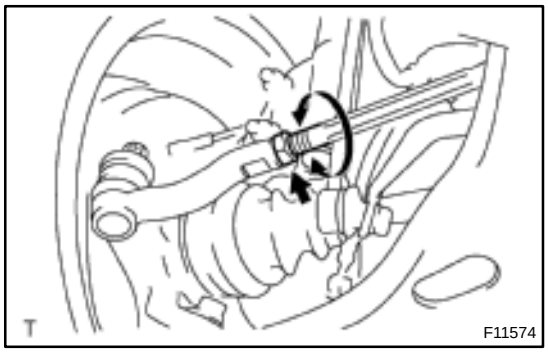

(b) Loosen the tie rod end lock nuts.

(c) Turn the right and left rack ends by an equal amount to adjust the toe–in.

HINT:

Try to adjust the toe–in to the center of the specified value.

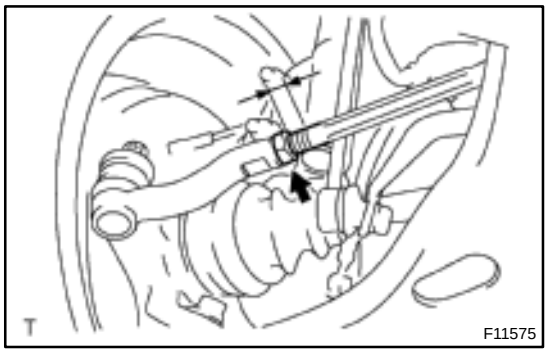

(d) Make sure that the lengths of the right and left rack ends are the same.

Rack end length difference: 1.5 mm (0.059 in.) or less

(e) Torque the tie rod end lock nuts.

Torque: 74 N·m (750 kgf·cm, 55 ft·lbf)

(f) Place the boots on the seats and install the clips.

HINT:

Make sure that the boots are not twisted.

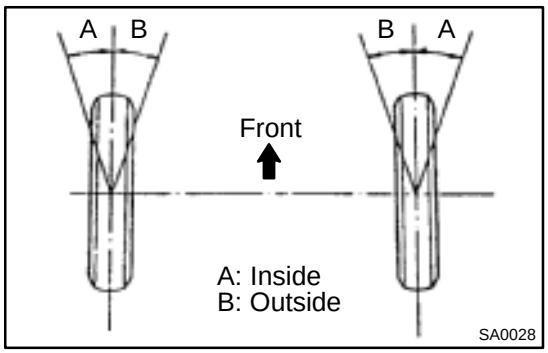

7. INSPECT WHEEL ANGLE

Turn the steering wheel fully and measure the turning angle.

Wheel turning angle:

Inside wheel	42°42' ± 2° (42.70° ± 2°)
Outside wheel: Reference	35°54' (35.90°)

If the right and left inside wheel angles differ from the specified value, check the right and left rack end lengths.

SA1ZR–01

REMOVAL

1. REMOVE FRONT WHEEL

Torque: 103 N·m (1,050 kgf·cm, 76 ft·lbf)

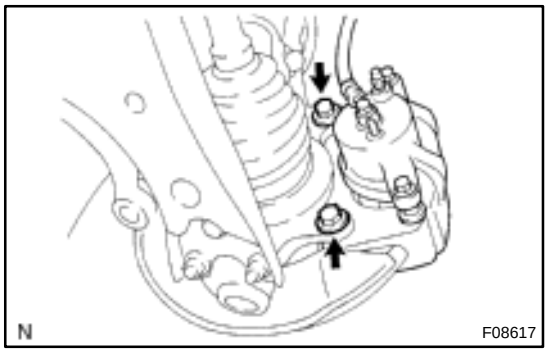

2. CHECK BEARING BACKLASH AND AXLE HUB DEVIATION

(a) Remove the 2 bolts, brake caliper and disc.

(b) Support the brake caliper securely.

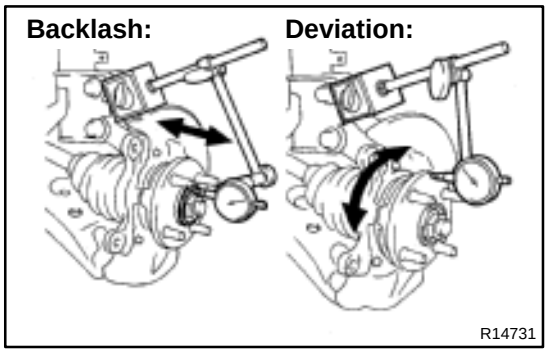

(c) Using a dial indicator, check the backlash near the center of the axle hub.

Maximum: 0.05 mm (0.0020 in.)

If the backlash exceeds the maximum, replace the bearing.

(d) Using a dial indicator, check the deviation at the surface of the axle hub outside the hub bolt.

Maximum: 0.07 mm (0.0028 in.)

If the deviation exceeds the maximum, replace the axle hub.

(e) Install the disc, 2 bolts and brake caliper.

Torque: 107 N·m (1,090 kgf·cm, 79 ft·lbf)

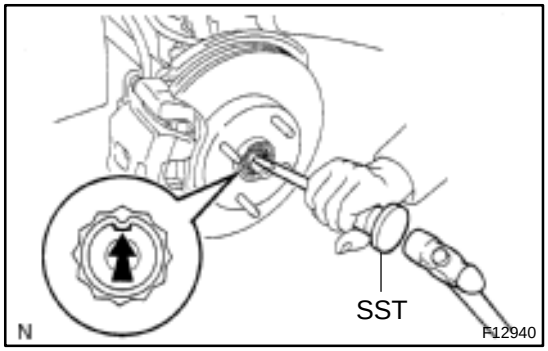

3. REMOVE DRIVE SHAFT LOCK NUT

(a) Using SST and a hammer, unstake the staked part of the lock nut.

SST 09930–00010

(b) While applying the brakes, remove the nut.

Torque: 216 N·m (2,200 kgf·cm, 159 ft·lbf)

(c) Remove the brake caliper and disc.

(d) Support the brake caliper securely.

4. REMOVE ABS SPEED SENSOR

Torque: 8.0 N·m (82 kgf·cm, 71 in.·lbf)

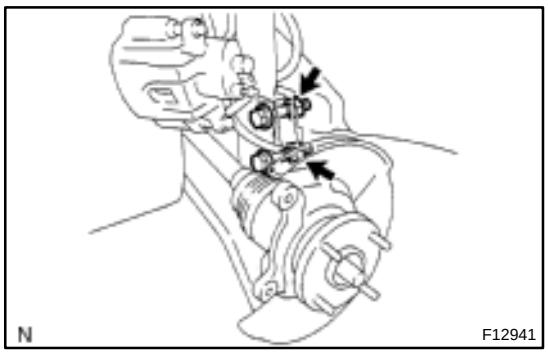

5. LOOSEN 2 NUTS ON LOWER SIDE OF SHOCK ABSORBER

Torque: 153 N·m (1,560 kgf·cm, 113 ft·lbf)

HINT:

Do not remove the 2 bolts and nuts.

6. DISCONNECT TIE ROD END FROM STEERING KNUCKLE

(a) Remove the cotter pin and nut.

Torque: 49 N·m (500 kgf·cm, 36 ft·lbf)

HINT:

At the time of installation, if the holes for a new cotter pin are not aligned, tighten the nut further up to 60°.

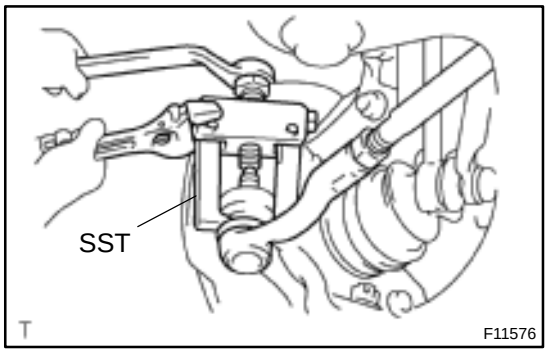

(b) Using SST, disconnect the tie rod end from the steering knuckle.

SST 09628–62011

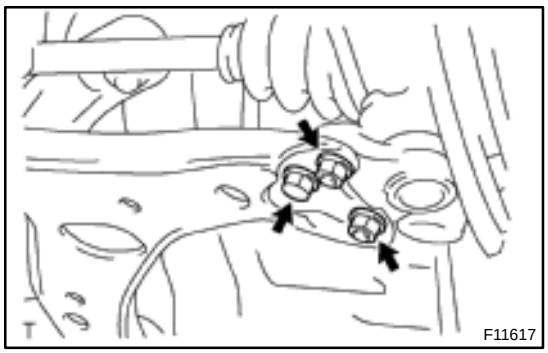

7. DISCONNECT LOWER SUSPENSION ARM FROM LOWER BALL JOINT

Remove the 2 nuts and bolt.

Torque: 142 N·m (1,450 kgf·cm, 105 ft·lbf)

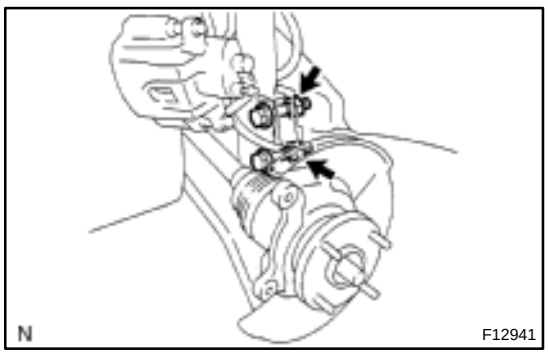

8. REMOVE STEERING KNUCKLE WITH AXLE HUB

(a) Remove the 2 bolts and nuts on the lower side of the shock absorber.

HINT:

At the time of installation, coat the nut's thread with engine oil.

(b) Remove the steering knuckle with the axle hub.

NOTICE:

Be careful not to damage the boot and ABS speed sensor rotor.

SA07D–07

DISASSEMBLY

1. REMOVE LOWER BALL JOINT

(a) Remove the cotter pin and nut.

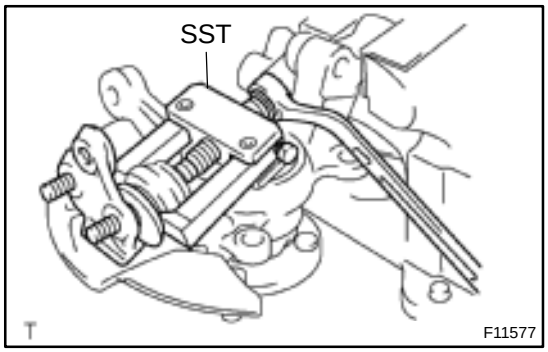

(b) Using SST, remove the lower ball joint.
SST 09628–62011

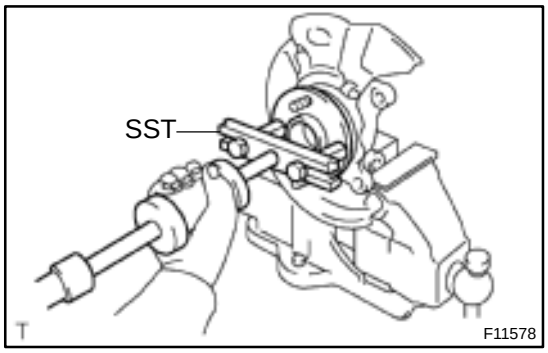

2. REMOVE AXLE HUB

(a) Using SST, remove the axle hub.
SST 09520–00031 (09520–00040, 09521–00010, 09521–00020)

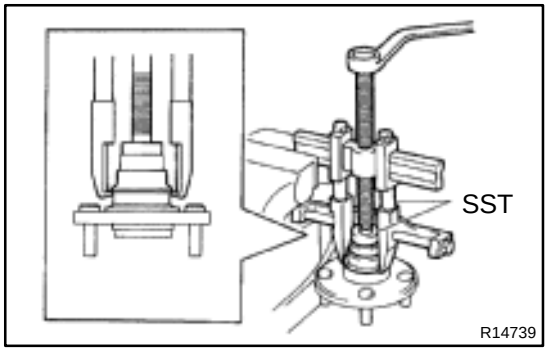

(b) Using SST, remove the inner race (outside) from the axle hub.
SST 09950–40011 (09951–04020, 09952–04010, 09953–04020, 09954–04010, 09955–04011, 09957–04010, 09958–04011), 09950–60010 (09951–00370)

3. REMOVE DUST COVER

Using a torx socket (T30), remove the 3 bolts and dust cover.

4. REMOVE BEARING FROM STEERING KNUCKLE

(a) Using snap ring pliers, remove the snap ring.

(b) Place the inner race on the outside of the bearing.

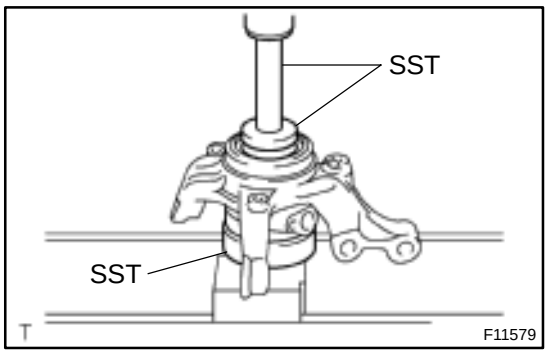

(c) Using SST and a press, remove the bearing.
SST 09527–17011, 09950–60010 (09951–00650), 09950–70010 (09951–07150)

SA20B–01

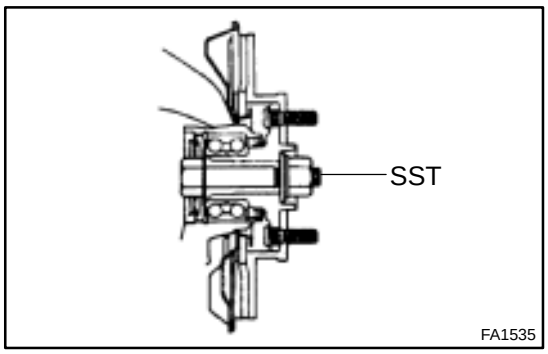

REMOVAL

NOTICE:

- **The hub bearing could be damaged if it is subjected to the vehicle weight, such as when moving the vehicle with the drive shaft removed.**
  Therefore, if it is absolutely necessary to place the vehicle weight on the hub bearing, first support it with the SST.
  SST 09608–16042 (09608–02021, 09608–02041)
- **After disconnecting the drive shaft from the axle hub, work carefully so as not to damage the ABS speed sensor rotor serrations on the drive shaft.**

1. REMOVE FRONT WHEEL
Torque: 103 N·m (1,050 kgf·cm, 76 ft·lbf)

2. REMOVE ENGINE UNDER COVER

3. DRAIN ATF

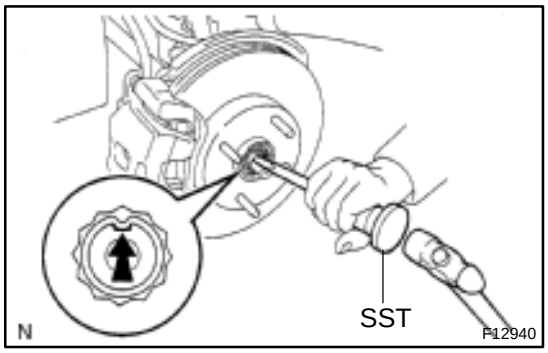

4. REMOVE DRIVE SHAFT LOCK NUT

(a) Using SST and a hammer, unstake the staked part of the lock nut.
SST 09930–00010

(b) While applying the brakes, remove the nut.
Torque: 216 N·m (2,200 kgf·cm, 159 ft·lbf)

5. DISCONNECT TIE ROD END FROM STEERING KNUCKLE

(a) Remove the cotter pin and nut.
Torque: 49 N·m (500 kgf·cm, 36 ft·lbf)

HINT:
At the time of installation, if the holes for a new cotter pin are not aligned, tighten the nut further up to 60°.

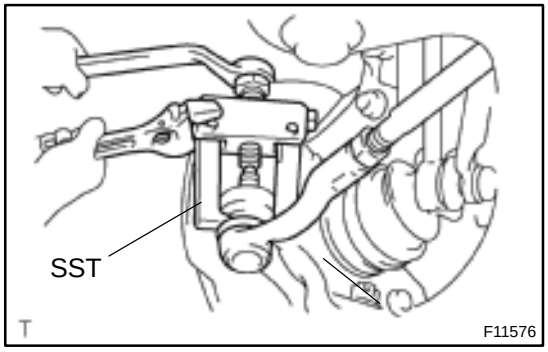

(b) Using SST, disconnect the tie rod end from the steering knuckle.
SST 09628–62011

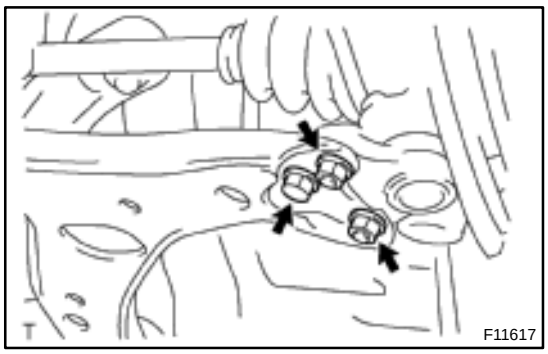

6. DISCONNECT LOWER BALL JOINT FROM LOWER SUSPENSION ARM

Remove the 2 nuts and bolt.

Torque: 142 N·m (1,450 kgf·cm, 105 ft·lbf)

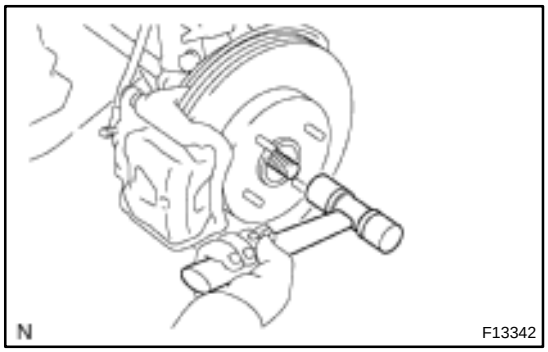

7. DISCONNECT DRIVE SHAFT FROM AXLE HUB

Using a plastic hammer, disconnect the drive shaft from the axle hub.

NOTICE:

Be careful not to damage the boot and ABS speed sensor rotor.

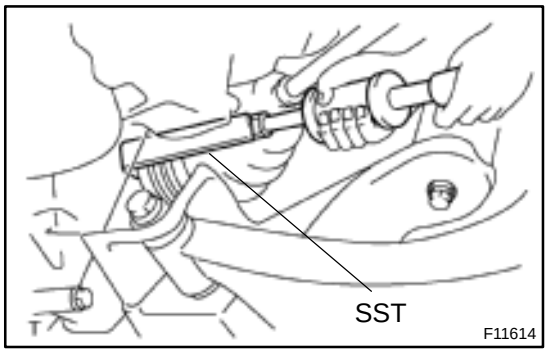

8. REMOVE DRIVE SHAFT

(a) Using SST, remove the drive shaft.

SST 09520–01010, 09520–24010 (09520–32040)

NOTICE:

Be careful not to damage the oil seal and dust cover.

HINT:

At the time of installation, please refer to the following items.

- Apply gear oil to the inboard joint shaft and differential case sliding surfaces.
- Before installing the drive shaft, set the snap ring with its opening side facing downward.
- Whether inboard joint shaft is in contact with pinion shaft or not can be known from the sound or feeling.
- After installation, check that there is 2 – 3 mm (0.08 – 0.12 in.) of play in the axial direction.
- After installation, check that the drive shaft cannot be removed by hand.

(b) Using a screwdriver, remove the snap ring from the inboard joint shaft.

SA20C–01

DISASSEMBLY

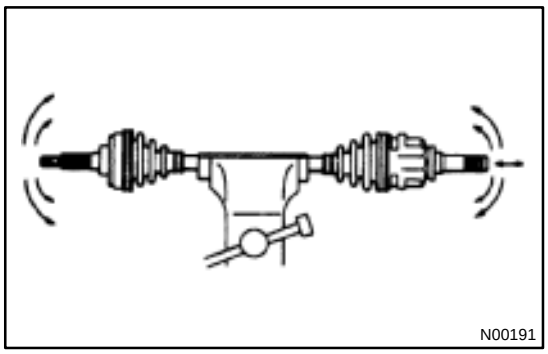

1. CHECK DRIVE SHAFT

(a) Check to see that there is no remarkable play in the outboard joint.

(b) Check to see that the inboard joint slides smoothly in the thrust direction.

(c) Check to see that there is no remarkable play in the radial direction of the inboard joint.

(d) Check the boots for damage.

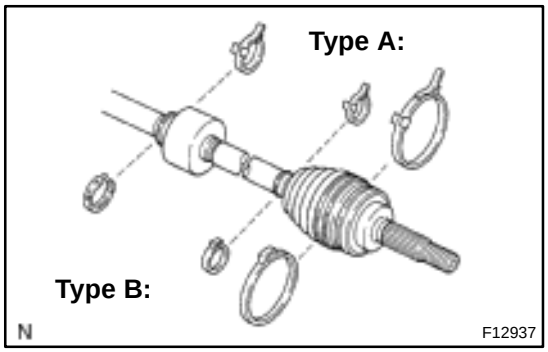

(e) Check the shape of the boot clamp.

2. REMOVE INBOARD JOINT SHAFT

(a) Using a screwdriver, disclamp the 2 inboard joint boot clamps.

(b) Slide the inboard joint boot toward the outboard joint.

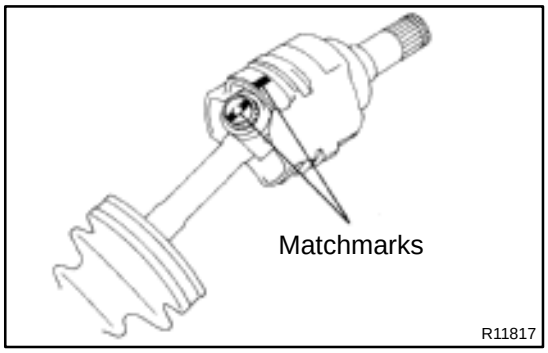

(c) Place matchmarks on the inboard joint shaft and tripod.

NOTICE:

Do not punch the marks.

(d) Remove the inboard joint shaft from the outboard joint shaft.

3. REMOVE TRIPOD

(a) Using a snap ring expander, remove the snap ring.

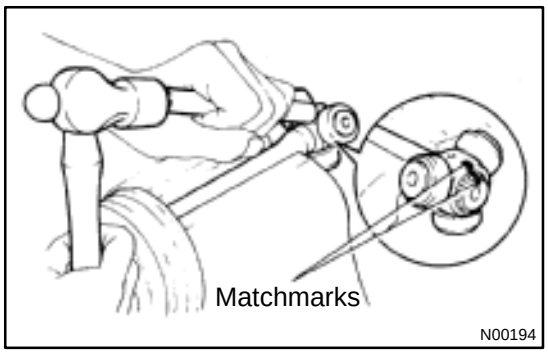

(b) Place matchmarks on the outboard joint shaft and tripod.

NOTICE:

Do not punch the marks.

(c) Using a brass bar and hammer, tap out the tripod from the outboard joint shaft.

NOTICE:

Do not tap the roller.

4. REMOVE INBOARD JOINT BOOT AND 2 CLAMPS

5. RH drive shaft:
REMOVE DYNAMIC DAMPER

(a) Type A clamp:
Using a screwdriver, disclamp the dynamic damper clamp and remove it.

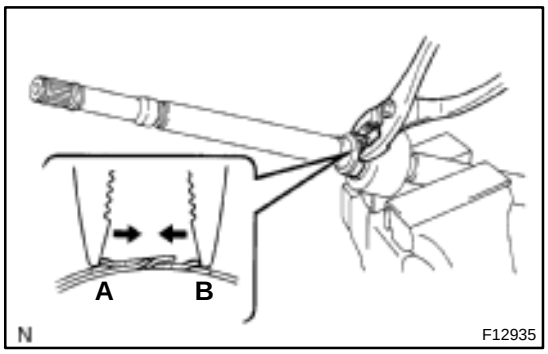

(b) Type B clamp:
Using pliers, pinch the claw A and B to compress the dynamic damper clamp and remove it.

(c) Remove the dynamic damper.

6. REMOVE OUTBOARD JOINT BOOT

(a) Type A clamp:
Using a screwdriver disclamp the 2 outboard joint boot clamps.

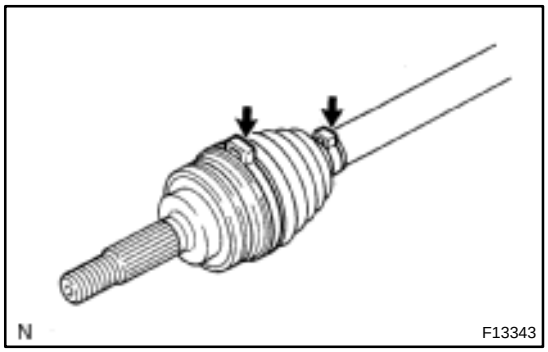

(b) Type B clamp:
Using a side cutter, cut the 2 outboard joint boot clamps and remove it.

NOTICE:

Cut the part shown by the arrow so that the boot will not be damaged.

(c) Remove the outboard joint boot from the outboard joint shaft.

NOTICE:

Do not disassemble the outboard joint.

7. REMOVE DUST COVER

Using SST and a press, remove the dust cover from the inboard joint shaft.

SST 09950–00020

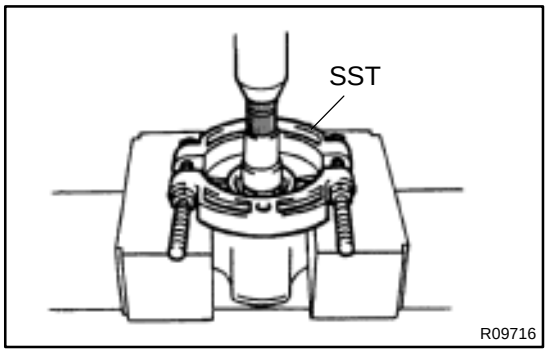

SA20D–01

REASSEMBLY

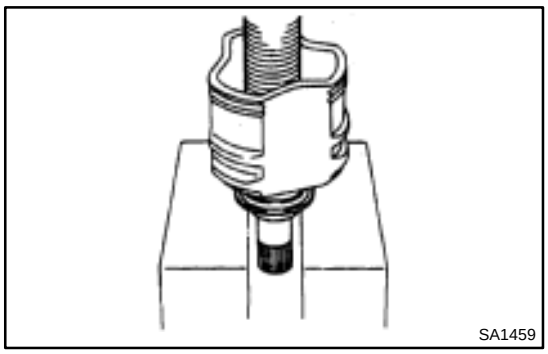

1. INSTALL DUST COVER

Using a press, install a new dust cover to the inboard joint shaft.

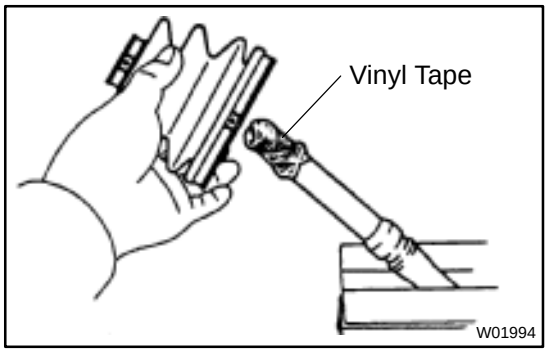

2. TEMPORARILY INSTALL BOOTS, CLAMPS AND DYNAMIC DAMPER (RH DRIVE SHAFT)

HINT:

Before installing the boots (and dynamic damper), wrap the spline of the outboard joint shaft with vinyl tape to prevent them from being damaged.

(a) Place either 2 new A or B type boot clamps on a new outboard joint boot and install them to the outboard joint shaft.

(b) RH drive shaft:

Place either a new A or B type clamp on the dynamic damper and install them to the outboard joint shaft.

HINT:

For B type only, the used clamp can be employed.

(c) Place 2 new clamps on a new inboard joint boot and install them to the outboard joint shaft.

3. INSTALL TRIPOD

(a) Place the beveled side of the tripod axial spline toward the outboard joint.

(b) Align the matchmarks placed before removal.

(c) Using a brass bar and hammer, tap in the tripod to the outboard joint shaft.

NOTICE:

Do not tap the roller.

(d) Using a snap ring expander, install a new snap ring.

4. INSTALL BOOT TO OUTBOARD JOINT

Before assembling the boot, pack the outboard joint and boot with grease in the boot kit.

Grease capacity: (Color = Yellow ocher)
110 – 120 g (3.9 – 4.2 oz.)

5. INSTALL INBOARD JOINT SHAFT TO OUTBOARD JOINT SHAFT

(a) Pack the inboard joint and boot with grease in the boot kit.

Grease capacity: (Color = Yellow ocher)
180 – 190 g (6.3 – 6.7 oz.)

(b) Align the matchmarks placed before removal.

(c) Install the inboard joint shaft to the outboard joint shaft.

(d) Temporarily install the boot to the inboard joint shaft.

6. ASSEMBLE BOOT CLAMPS TO BOTH BOOTS

(a) Make sure that the 2 boots are on the shaft grooves.

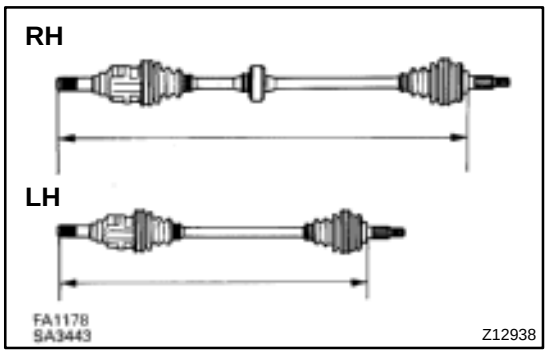

(b) Make sure that the 2 boots are not stretched or contracted when the drive shaft is at standard length.

Drive shaft standard length:

RH	836.9 ± 5.0 mm (32.949 ± 0.197 in.)
LH	579.9 ± 5.0 mm (22.831 ± 0.197 in.)

(c) Bend the band and lock the 2 inboard joint boot clamps with a screwdriver.

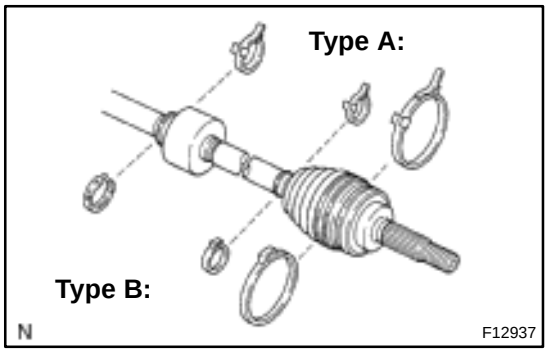

(d) Install either A or B type boot clamp.

(e) Type A clamp:
Bend the band and lock the 2 outboard joint boot clamps with a screwdriver.

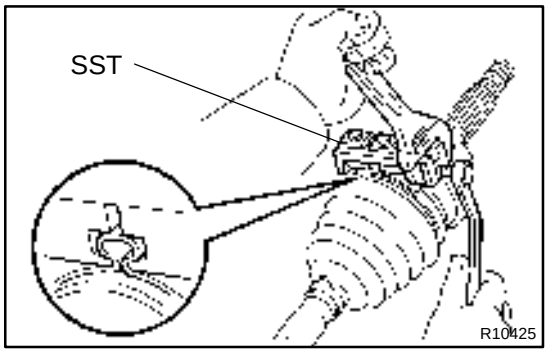

(f) Type B clamp:
Pinch the 2 outboard joint boot clamps.

(1) Secure the 2 outboard joint boot clamps onto the boot.

(2) Place SST onto the outboard joint large boot clamp.
SST 09521–24010

(3) Tighten the SST so that the large clamp is pinched.

NOTICE:
Do not overtighten the SST.

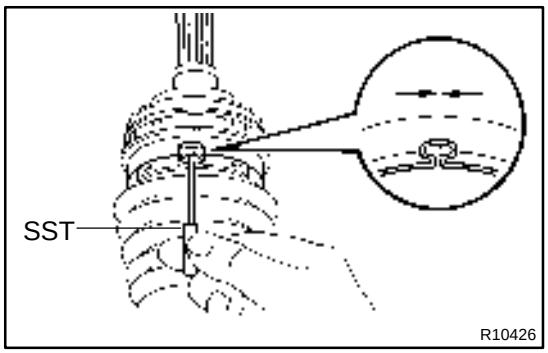

(4) Using SST, adjust the clearance of the large clamp.
SST 09240–00020
Clearance: 0.8 mm (0.031 in.) or less

(5) Employ the same manner to the outboard joint small boot clamp.

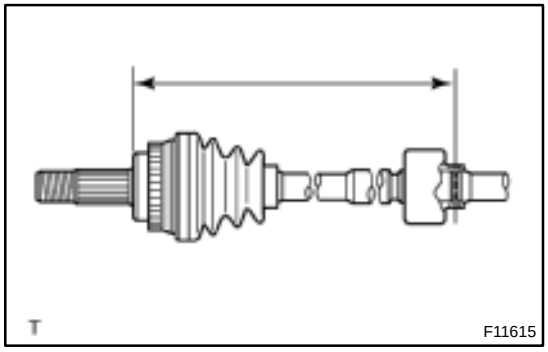

7. RH drive shaft:
ASSEMBLE DYNAMIC DAMPER CLAMP

(a) Set the distance, as described below.
Distance: 500.1 ± 2.0 mm (19.689 ± 0.079 in.)

(b) Type A clamp:
Bend the band and lock the dynamic damper clamp with a screwdriver.

(c) Type B clamp:
Using pliers, compress the clamp and attach the claws.

8. CHECK DRIVE SHAFT (See page SA–19)

SA1P6–02

REASSEMBLY

1. INSTALL LOWER INSULATOR ONTO SHOCK ABSORBER

2. INSTALL SPRING BUMPER TO PISTON ROD

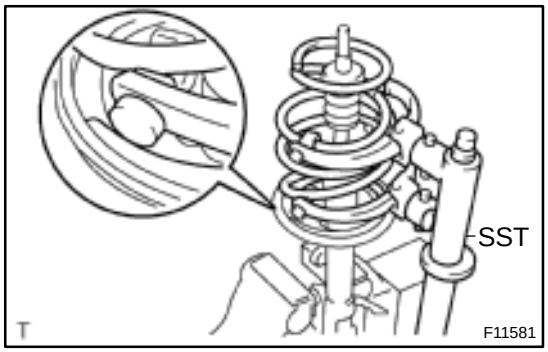

3. INSTALL COIL SPRING

(a) Using SST, compress the coil spring.

SST 09727–30021 (09727–00010, 09727–00021, 09727–00031)

NOTICE:

Do not use an impact wrench. It will damage the SST.

(b) Install the coil spring to the shock absorber.

HINT:

Fit the lower end of the coil spring into the gap of the spring lower seat.

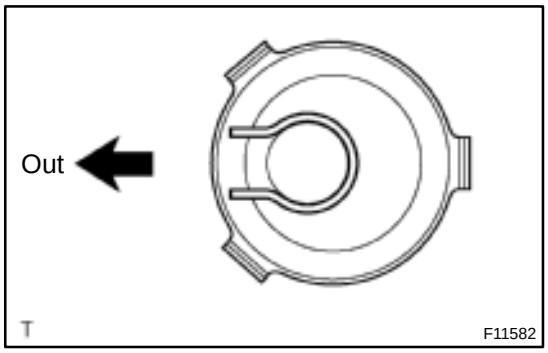

(c) Install the upper insulator as shown in the illustration.

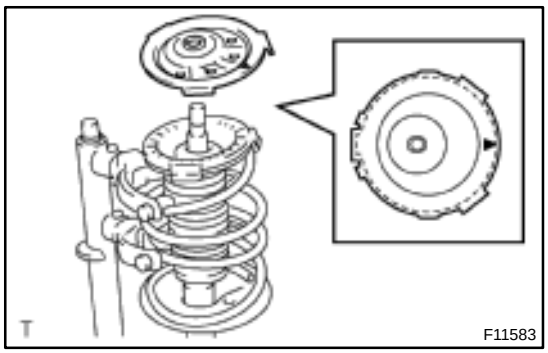

(d) Install the spring seat to the shock absorber with the "▽" mark facing to the outside of the vehicle.

(e) Install the dust seal and suspension support.

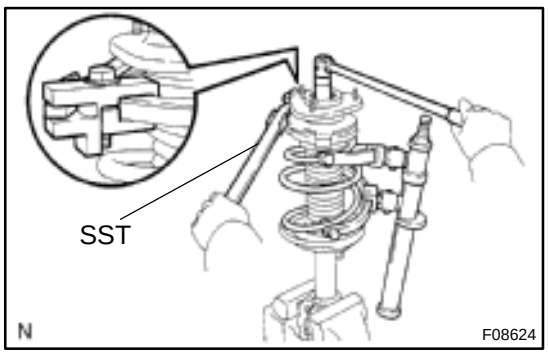

(f) Using SST to hold the suspension support, install a new nut.

SST 09729–22031

Torque: 47 N·m (475 kgf·cm, 34 ft·lbf)

(g) Remove the SST.

SST 09727–30021 (09727–00010, 09727–00021, 09727–00031)

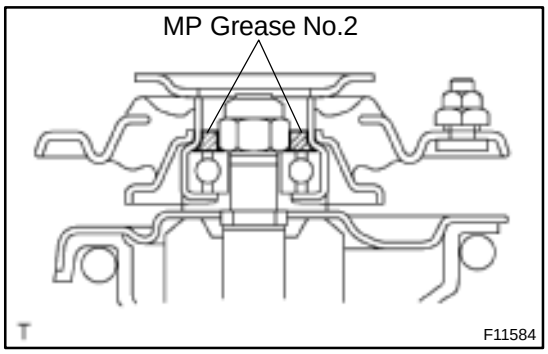

(h) Apply MP grease No.2 into the suspension support.

CAUTION:

Do not touch grease on rubber surface of upper support.

(i) Install the cap.

SA1ZW–01

REMOVAL

1. REMOVE FRONT WHEEL

Torque: 103 N·m (1,050 kgf·cm, 76 ft·lbf)

2. REMOVE ENGINE UNDER COVER

3. REMOVE LOWER SUSPENSION ARM

(a) Disconnect the RH and LH tie rod ends.

(1) Remove the cotter pin and nut.

Torque: 49 N·m (500 kgf·cm, 36 ft·lbf)

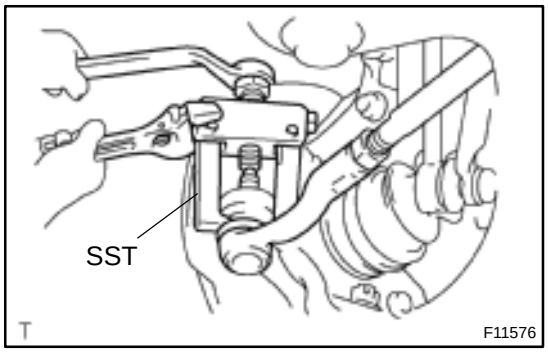

(2) Using SST, disconnect the tie rod end from the steering knuckle.

SST 09628–62011

(3) Employ the same manner described above to the other side.

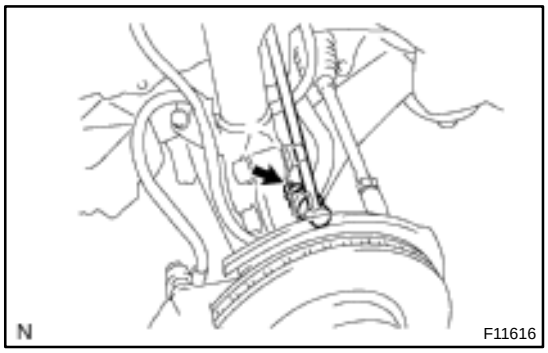

(b) Disconnect the RH and LH stabilizer bar links.

(1) Remove the nut and disconnect the stabilizer bar link from the shock absorber.

Torque: 74 N·m (755 kgf·cm, 55 ft·lbf)

HINT:

If the ball joint turns together with the nut, use a hexagon (5 mm) wrench to hold the stud.

(2) Employ the same manner described above to the other side.

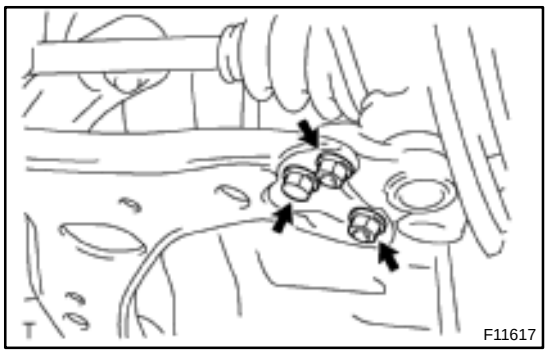

(c) Disconnect the RH and LH lower suspension arms from the lower ball joints.

(1) Remove the bolt and 2 nuts, and disconnect the lower suspension arm from the lower ball joint.

Torque: 142 N·m (1,450 kgf·cm, 105 ft·lbf)

(2) Employ the same manner described above to the other side.

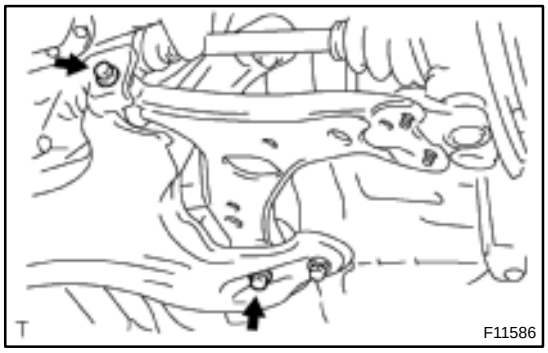

(d) Loosen the 2 lower suspension arm set bolts.

Torque: 137 N·m (1,397 kgf·cm, 101 ft·lbf)

HINT:

At the time of installation, after stabilizing the suspension, torque the bolts.

(e) Disconnect the sliding yoke (See page SR–6).

(f) Support the suspension member with a transmission jack.

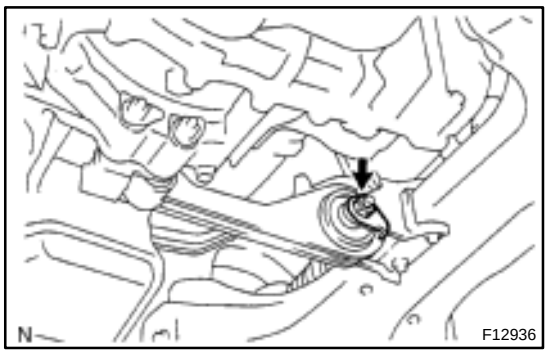

(g) Remove the bolt and nut, disconnect the torque rod from the suspension member.
Torque: 100 N·m (1,150 kgf·cm, 83 ft·lbf)

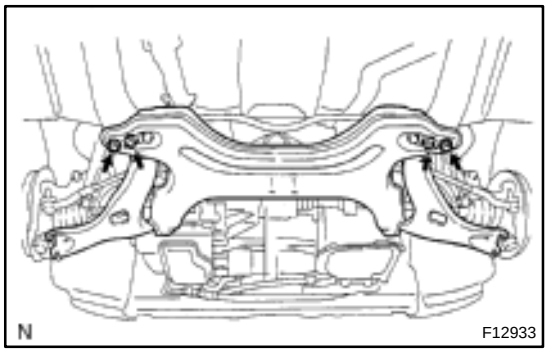

(h) Remove the 4 bolts and disconnect the suspension member from the body.
Torque:
Front side: 113 N·m (1,152 kgf·cm, 83 ft·lbf)
Rear side: 157 N·m (1,600 kgf·cm, 116 ft·lbf)

(i) Remove the 2 lower suspension arm set bolts and disconnect the lower suspension arm from suspension member.

SA1ZU–01

REMOVAL

1. REMOVE REAR WHEELS

Torque: 103 N·m (250 kgf·cm, 18 ft·lbf)

2. REMOVE REAR SEAT (See page BO–83)

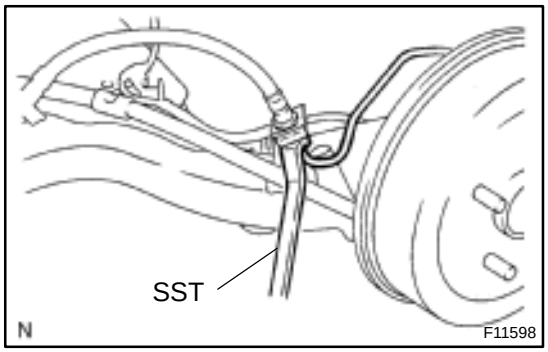

3. DISCONNECT BRAKE LINES

(a) Using SST, disconnect the brake lines from the flexible hose. Use a container to catch brake fluid as it drains out.
SST 09751–36011

(b) Remove the clip.

(c) Employ the same manner described above to the other side.

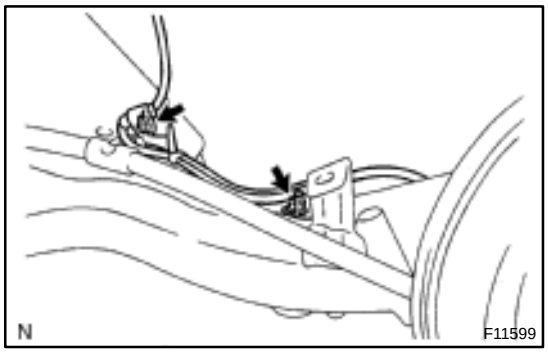

4. DISCONNECT ABS SPEED SENSOR WIRE HARNESS

Remove the 4 nuts, and disconnect the ABS speed sensor wire harness from the axle beam.

Torque: 5.4 N·m (55 kgf·cm, 48 in.·lbf)

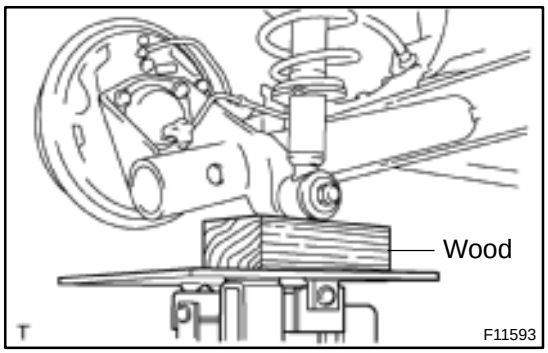

5. SUPPORT REAR AXLE BEAM AT RIGHT AND LEFT SIDES WITH JACKS

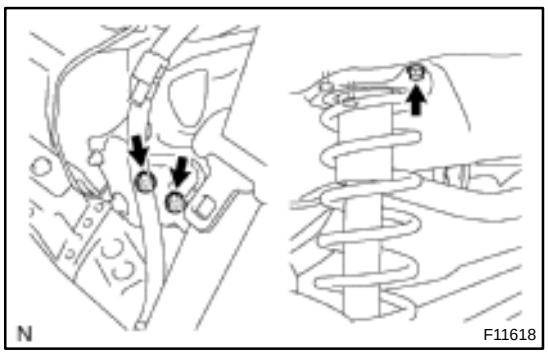

6. REMOVE SHOCK ABSORBER

(a) Remove the 2 nuts and bolt.

Torque: 80 N·m (816 kgf·cm, 59 ft·lbf)

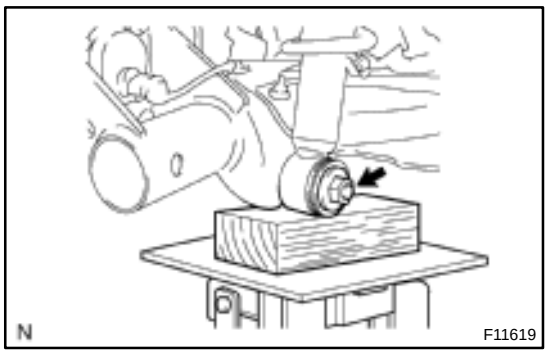

(b) Remove the nut, washer and shock absorber.
Torque: 80 N·m (816 kgf·cm, 59 ft·lbf)

SA1ZV–01

REPLACEMENT

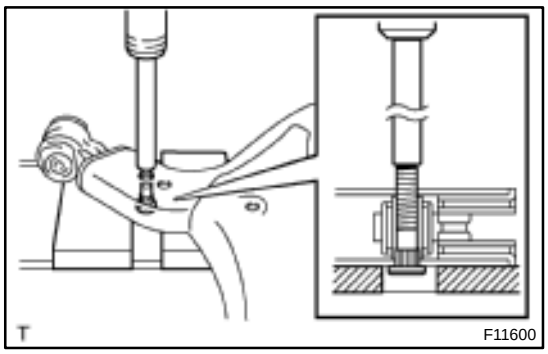

1. REMOVE TOE CONTROL LINK

(a) Remove the nut.

(b) Using a brass bar, remove the bolt.

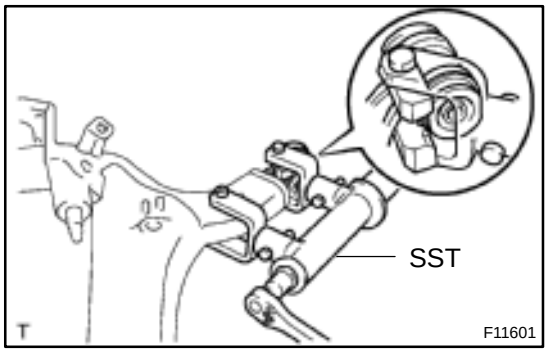

(c) Using a SST, remove the toe control link from axle beam.
SST 09710–40010 (09711–40010, 09712–40010), 09727–30021 (09727–00010, 09727–00031)

NOTICE:

- **Make sure that the arm inside of SST is contact with the toe control link at the position shown in the illustration.**
- **Never use SST (09727 – 00030)**

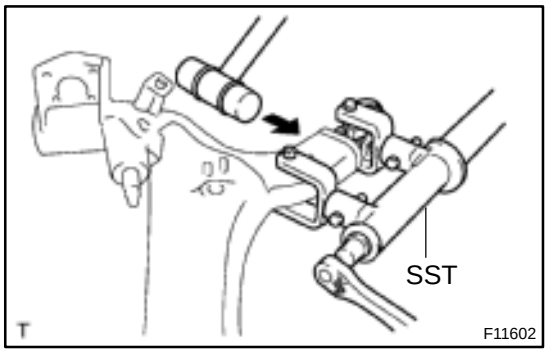

HINT:
The outer race of the toe control link is made of rubber and because of its elasticity, it is difficult to remove the link from the axle beam.
So, tap the part indicated by the arrow with a plastic hammer when removing.

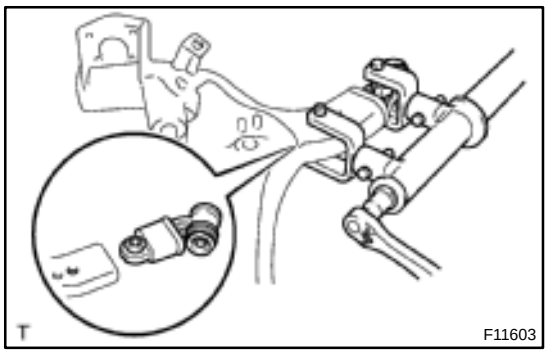

2. INSTALL TOE CONTROL LINK

(a) Using a SST, install a new toe control link.
SST 09710–40010 (09711–40010, 09712–40010), 09727–30021 (09727–00010, 09727–00031)

NOTICE:

- **Make sure that the arm inside of SST is contact with the frange of the toe control link.**
- **Align the bolt holes of the toe control link and axle beam in the direction of press–fitting.**
  When the bolt holes slip off the aligned position, press–fit a new toe control link again.

HINT:

- Until the outer race is fit into the axle beam, adjust the arm position of SST to set the toe control link upright to the axle beam.
- When the toe control link is fully press–fit into the axle beam, the bolt holes are not aligned.

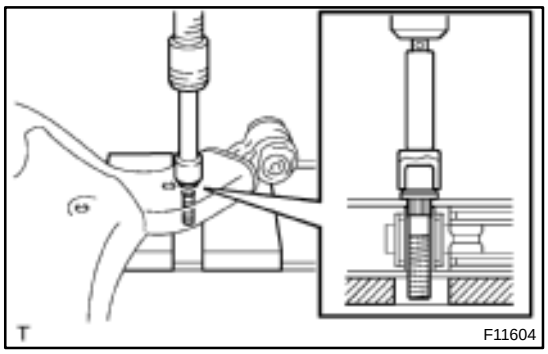

(b) Using a extension bar and press, install a new bolt.

NOTICE:

Press in the bolt until the base of the bolt head is pressed tightly against the axle beam.

(c) Install the a nut.

TROUBLESHOOTING

PROBLEM SYMPTOMS TABLE

BR0PX–07

Use the table below to help you find the cause of the problem. The numbers indicate the priority of the likely cause of the problem. Check each part in order. If necessary, replace these parts.

Symptom	Suspect Area	See page
Low pedal or spongy pedal	5. Fluid leaks for brake system	DI–451
	6. Air in brake system	BR–4
	7. Piston seals (Worn or damaged)	BR–26
		BR–32
	8. Master cylinder (Faulty)	BR–16
	9. Hydraulic brake booster (Faulty)	BR–42
Brake drag	1. Brake pedal freeplay (Minimum)	BR–7
	2. Parking brake pedal travel (Out of adjustment)	BR–9
	3. Parking brake wire (Sticking)	–
	4. Pad or lining (Cracked or distorted)	BR–23
		BR–32
	5. Piston (Stuck)	BR–26
		BR–32
	6. Piston (Frozen)	BR–26
		BR–32
	7. Tension or return spring (Faulty)	BR–32
	8. Hydraulic brake booster (Faulty)	BR–42
Brake pull	1. Piston (Stuck)	BR–26
		BR–32
	2. Pad or lining (Cracked or distorted)	BR–23
		BR–32
	3. Piston (Frozen)	BR–26
		BR–32
	4. Disc or drum (Scored)	BR–26
		BR–32
	5. Pad or lining (Cracked or distorted)	BR–23
		BR–32
	6. Hydraulic brake booster (Faulty)	BR–42
Hard pedal but brake inefficient	1. Fluid leaks for brake system	DI–451
	2. Air in brake system	BR–4
	3. Pad or lining (Worn)	BR–23
		BR–32
	4. Pad or lining (Cracked or distorted)	BR–23
		BR–32
	5. Pad or lining (Oily)	BR–23
		BR–32
	6. Pad or lining (Glazed)	BR–23
		BR–32
	7. Disc or drum (Scored)	BR–26
		BR–32
	8. Hydraulic brake booster (Faulty)	BR–42

Noise from brakes	1. Pad or lining (Cracked or distorted) 2. Installation bolt (Loose) 3. Disc or drum (Scored) 4. Pad support plate (Loose) 5. Sliding pin (Worn) 6. Pad or lining (Dirty) 7. Pad or lining (Glazed) 8. Tension or return spring (Faulty) 9. Anti–squeal shim (Damaged) 10. Shoe hold–down spring (Damaged)	BR–23 BR–32 BR–26 BR–26 BR–32 BR–23 BR–26 BR–23 BR–32 BR–23 BR–32 BR–32 BR–23 BR–32
Brake warning light lights up*1 (Parking brake pedal released)	1. Brake fluid level 2. Hydraulic brake booster power supply system (Faulty)	 BR–41
Brake warning light lights up and brake warning buzzer sounds*2	Hydraulic brake booster power supply system (Faulty)	BR–41
ABS warning light lights up*3	1. Anti–lock brake system (Faulty) 2. Hydraulic brake booster power supply system (Faulty)	 BR–41

*1, *3: The light may stay on for about 60 seconds after the engine has been started. It is normal if it goes out after a while.

*2, *3: Depressing the brake pedal repeatedly may turn on the warning light and buzzer. It is normal if the light goes out and the buzzer stops sounding after a few seconds.

BRAKE FLUID

BR1J6–01

BLEEDING

HINT:

- If any work is done on the brake system or if air in the brake lines is suspected, bleed the air from the system.
- When bleeding, keep the amount of the fluid within the line of reservoir between Min. and Max.

NOTICE:

- **Do not let brake fluid remain on painted surfaces. Wash it off immediately.**
- **With the reservoir cap removed, when depressing the brake pedal, the fluid will spray.**

1. FILL RESERVOIR WITH BRAKE FLUID
Fluid: SAE J1703 or FMVSS NO. 116 DOT3

2. RELEASE PRESSURE FROM POWER SUPPLY SYSTEM

HINT:

If the hydraulic brake booster has been disassembled, disconnect the brake line from the hydraulic brake booster or if the reservoir becomes empty, bleed the hydraulic brake booster.

(a) Turn the ignition switch OFF, depress the brake pedal more than 40 times.

(b) Turn the ignition switch ON, check that the pump stops after 30 to 40 seconds.

NOTICE:

When the pump does not stop, repeat step (a) and (b) again.

3. BLEED AIR

(a) Turning the ignition switch OFF, bleed the right and left front brake caliper.

HINT:

Perform air bleeding for each wheel, depress the brake pedal more than 20 times or more for each.

(b) Turning the ignition switch ON, check that the pump motor stops.

(c) Fully open the bleeder plug of the right or left rear brake cylinder and drain the fluid while depressing the brake pedal for 3 seconds.

HINT:

- Perform air bleeding for both wheels on the right or left side and then do the same on the other side.
- It is not necessary to depress the pedal continuously, as brake fluid flows out by first depressing.

(d) Release the brake pedal and wait until the pump motor stops.

(e) Repeat step (c) and (d) 7 times or more.

(f) Tighten the bleeder plug of the rear brake cylinder.
Torque: 8.5 N·m (87 kgf·cm, 75 in.·lbf)

(g) While depressing the brake pedal, let air out from the rear brake cylinder mentioned in (f).

HINT:

- Hold the brake pedal depressed, and it is not necessary to repeat depressing of the pedal.
- Do not continuously drain the fluid from the bleeder plug for more than 3 seconds.
- When closing the bleeder plug, wait until the pump motor stops if it is operated.
- Repeat the procedure until air is completely removed.

(h) Perform step (c) to (g) on the other rear brake cylinder.

(i) With the ignition switch ON, check that the pump motor is stopped.

(j) Fully the bleeder plug of the front left brake cylinder and drain the fluid while depressing the brake pedal for 3 seconds.

(k) Release the brake pedal and wait until the pump motor stops.

(l) Repeat step (j) and (k) 4 times.

(m) Tighten the bleeder plug of the front left brake cylinder.
Torque: 8.5 N·m (87 kgf·cm, 75 in.·lbf)

(n) While depressing the brake pedal, let air out from the front left brake cylinder.

HINT:

- Hold the brake pedal depressed, and it is not necessary to repeat depressing of the pedal.
- Do not continuously drain the fluid from the bleeder plug for more than 3 seconds.
- When closing the bleeder plug, wait until the pump motor stops if it is operated.
- Repeat the procedure until air is completely removed.

(o) Check that the pump motor is stopped.

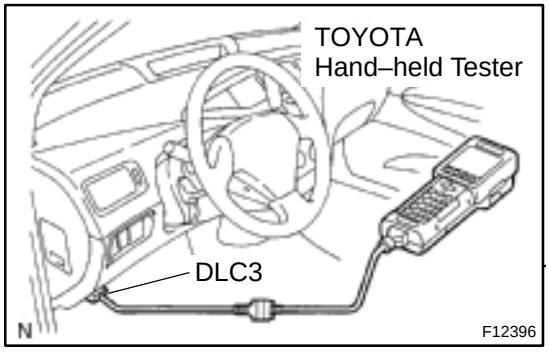

(p) Connect TOYOTA hand–held tester.
(1) Turn the ignition switch OFF, connect the TOYOTA hand–held tester to DLC3.
(2) Turn the ignition switch ON, and select ”AIR BLEEDING” on the TOYOTA hand–held tester.

HINT:

Please refer to the TOYOTA hand–held tester operator’s manual for further details.

(q) Holding the brake pedal depressed, turn SRRR solenoid ON with the TOYOTA hand–held tester.

HINT:
Do not keep the solenoid activated for 2 seconds, or more. Allow an interval of 20 seconds, or more if activating it continuously.

(r) Turn the SRRR solenoid OFF with the TOYOTA hand–held tester, and release the brake pedal.
(s) Check that the pump motor stops after 20 seconds.
(t) Repeat step (q) to (s) 3 times.
(u) Turn the ignition switch OFF, and disconnect the TOYOTA hand–held tester from DLC3.
(v) Clear the DTC (See page DI–353).

HINT:
- Diagnosis codes are erased with the shift lever in P range.
- After erasing, turn the ignition switch OFF to protect ECU.

4. CHECK FLUID LEVEL IN RESERVOIR

(a) With the ignition switch OFF, depress the brake pedal more than 40 times.
(b) Remove the reservoir cap. Add brake fluid up to the ”MAX” line.
Fluid: SAE J1703 or FMVSS NO. 116 DOT3

BR1JA–01

COMPONENTS

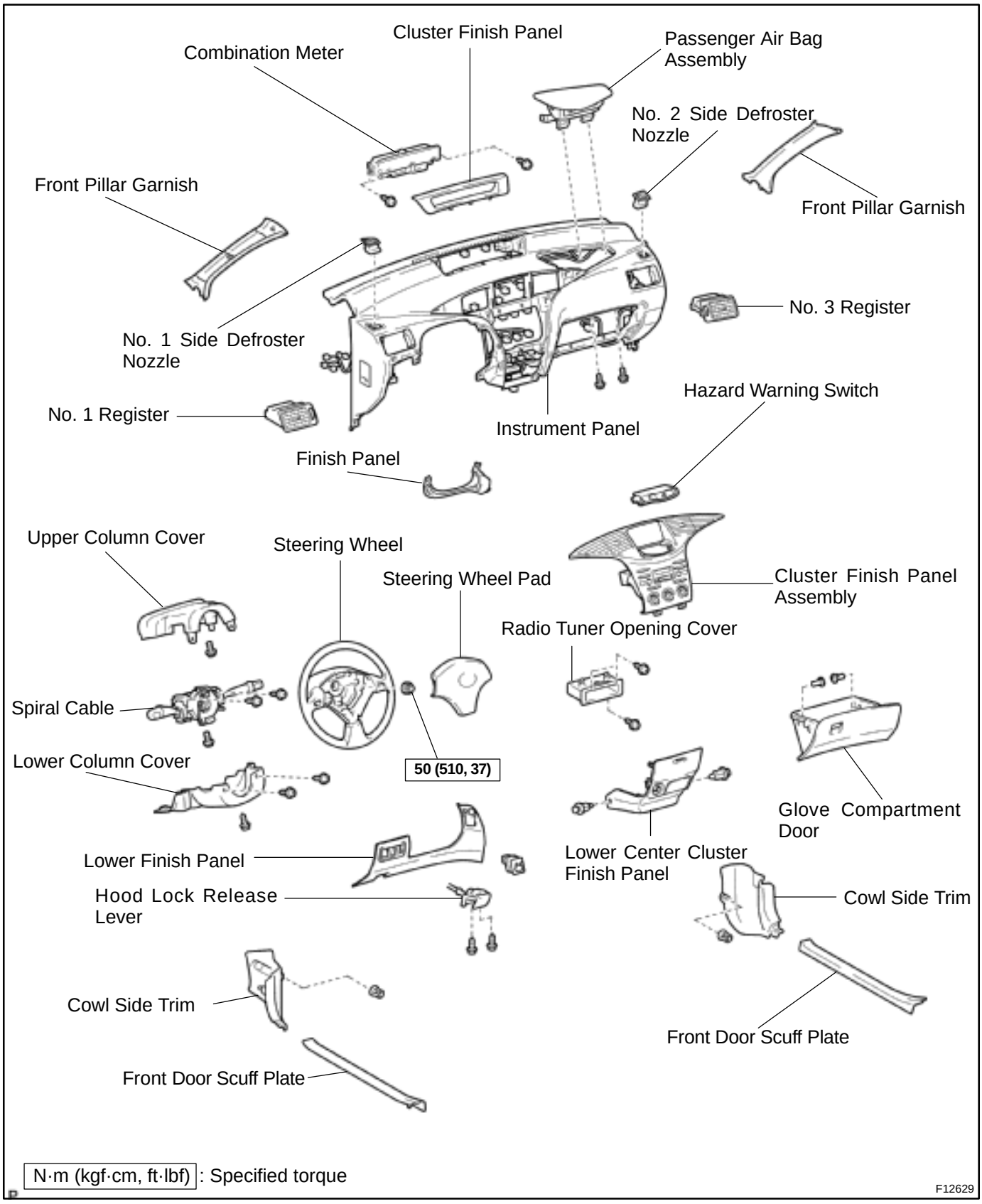

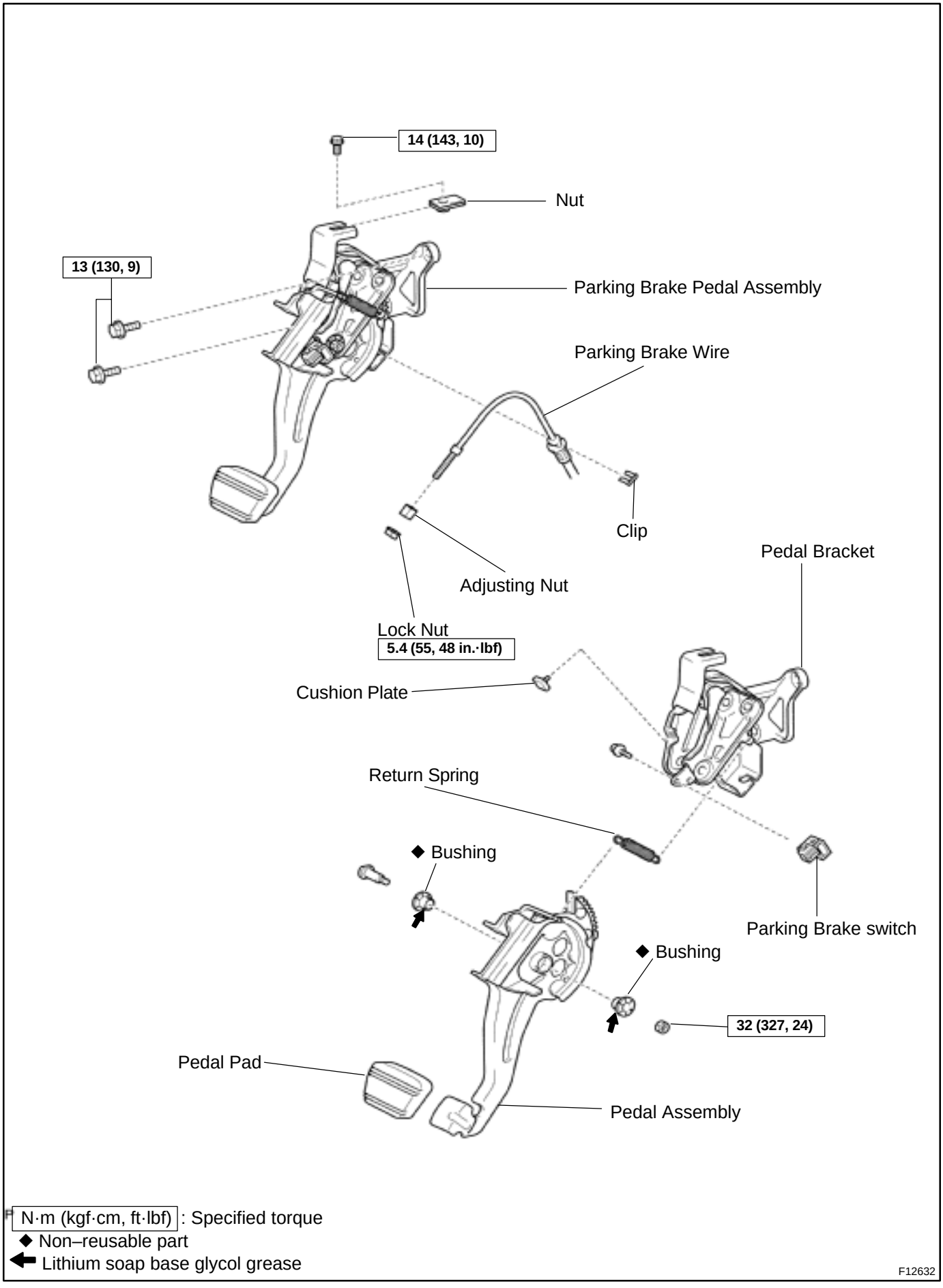
14 (143, 10)
Nut
13 (130, 9)
Parking Brake Pedal Assembly
Parking Brake Wire
Clip
Adjusting Nut
Lock Nut
5.4 (55, 48 in.·lbf)
Pedal Bracket
Cushion Plate
Return Spring
◆ Bushing
Parking Brake switch
◆ Bushing
32 (327, 24)
Pedal Pad
Pedal Assembly
N·m (kgf·cm, ft·lbf) : Specified torque
◆ Non–reusable part
Lithium soap base glycol grease
F12632

BRAKE MASTER CYLINDER

COMPONENTS

BR1JF–01

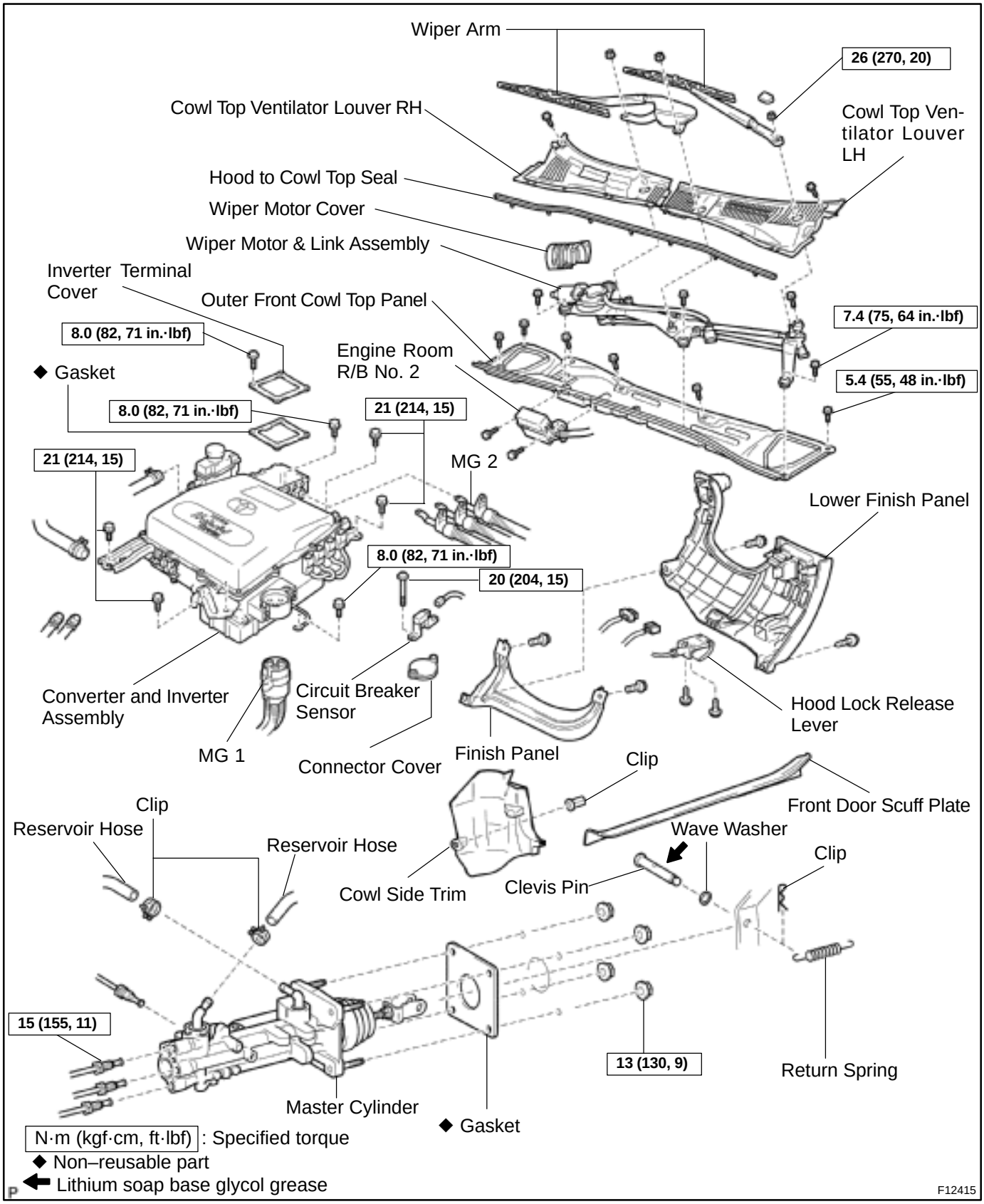

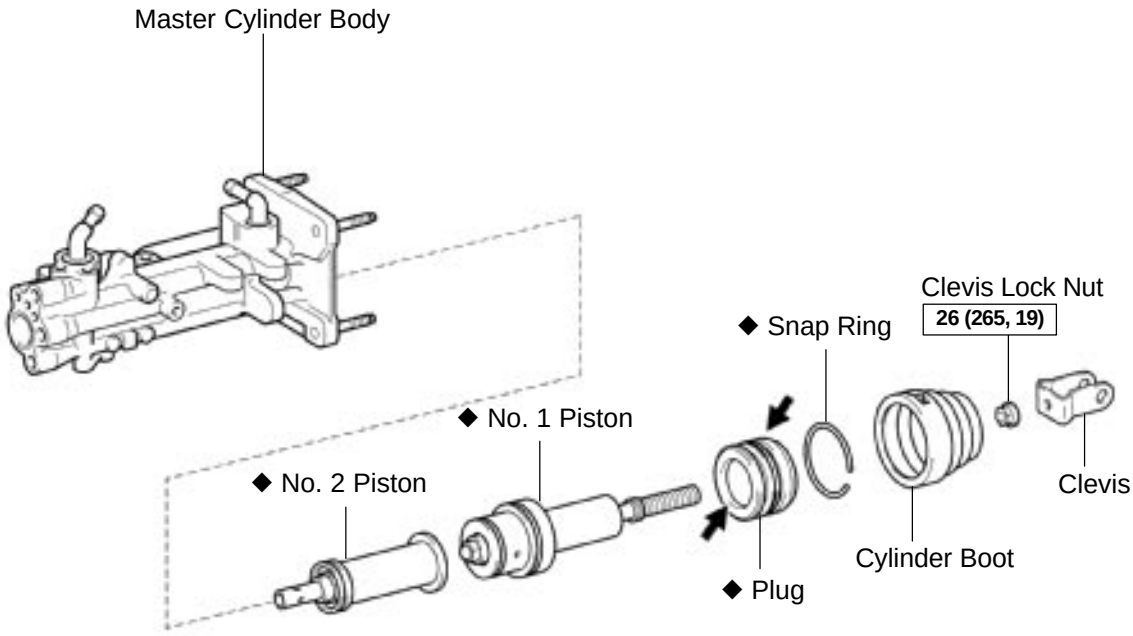

N·m (kgf·cm, ft·lbf) : Specified torque
◆ Non–reusable part
⬅ Lithium soap base glycol grease

F12630

BR1J3–01

REPLACEMENT

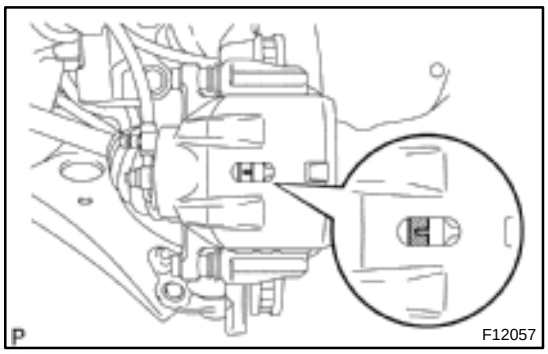

1. REMOVE FRONT WHEEL

2. INSPECT PAD LINING THICKNESS

Check the pad thickness through the caliper inspection hole and replace the pads if they are not within the specification.

Minimum thickness: 1.0mm (0.039 in.)

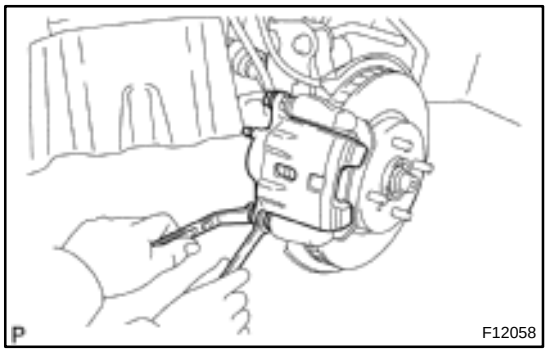

3. LIFT UP CALIPER

(a) Hold the sliding pin and remove the bottom side installation bolt.

HINT:

Do not disconnect the flexible hose from the brake caliper.

(b) Lift up the caliper and suspend it securely.

4. REMOVE 2 PADS WITH 4 ANTI–SQUEAL SHIMS

5. REMOVE 2 PAD SUPPORT PLATES

NOTICE:

The support plates can be used again provided that they have sufficient rebound, no deformation, cracks or wear, and have had all rust, dirt and foreign particles cleaned off.

6. CHECK DISC THICKNESS AND RUNOUT

(See page BR–29)

7. INSTALL PAD SUPPORT PLATES

Install the 2 pad support plates.

NOTICE:

Do not assemble the upper and lower pad support plates in reverse.

8. INSTALL NEW PADS

NOTICE:

When replacing worn pads, the anti–squeal shims must be replaced together with the pads.

(a) Apply disc brake grease to both side of the inner anti–squeal shim (See page BR–23).

(b) Install the 2 anti– squeal shims on each pad.

(c) Install the inner pad with the pad wear indicator plate facing upward.

(d) Install the outer pad.

NOTICE:

There should be no oil or grease adhering to the friction surfaces of the pads or the disc.

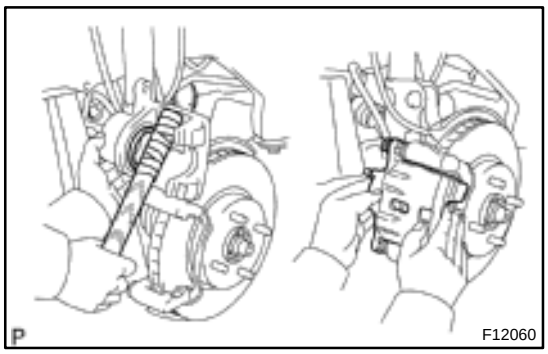

9. INSTALL CALIPER

(a) Draw out a small amount of brake fluid from the reservoir.

(b) Press in the piston with a hammer handle or similar implement.

HINT:

- Tape the hammer handle before use.
- If the piston is difficult to push in, loosen the bleeder plug and push in the piston while letting some brake fluid escape.

(c) Install the caliper.

(d) Hold the sliding pin and torque the installation bolts.
Torque: 34 N·m (350 kgf·cm, 25 ft·lbf)

10. INSTALL FRONT WHEEL
Torque: 103 N·m (1,050 kgf·cm, 76 ft·lbf)

11. DEPRESS BRAKE PEDAL SEVERAL TIMES

12. CHECK THAT FLUID LEVEL IS AT MAX LINE

BR14B–02

REMOVAL

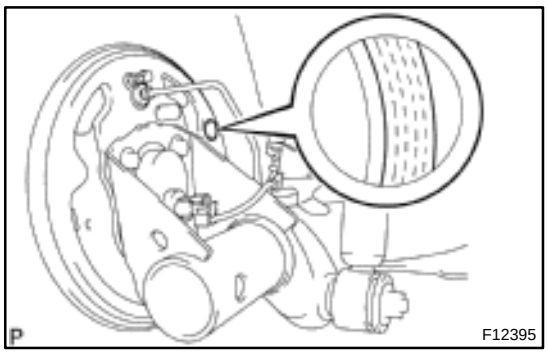

1. INSPECT SHOE LINING THICKNESS

Remove the inspection hole plug, and check the shoe lining thickness through the hole.

If less than minimum, replace the shoes.

Minimum thickness: 1.0 mm (0.039 in.)

2. REMOVE REAR WHEEL

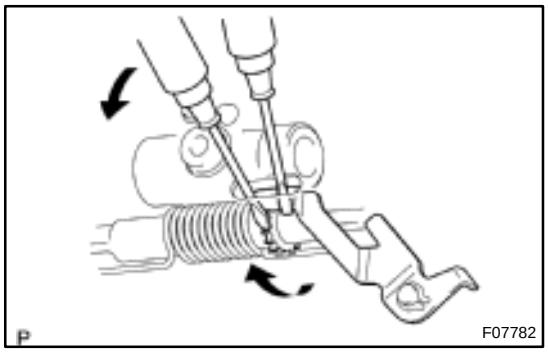

3. REMOVE BRAKE DRUM

(a) Release the parking brake pedal, and remove the brake drum.

HINT:

If the brake drum cannot be removed easily, do the following steps.

(b) Remove the plug and insert a screwdriver through the hole in the backing plate.

(c) Using another screwdriver, reduce the brake shoe adjuster by turning the adjusting wheel.

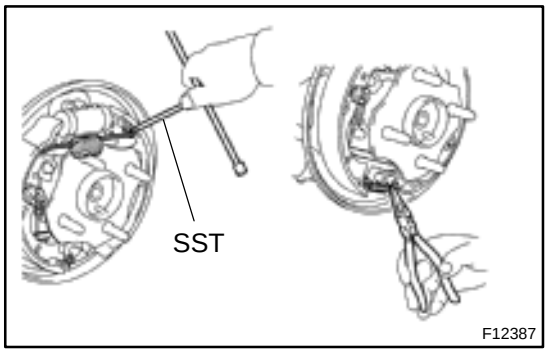

4. REMOVE FRONT SHOE

(a) Using SST, disconnect the return spring from the rear shoe.

SST 09703–30010

(b) Using needle–nose pliers, remove the anchor spring.

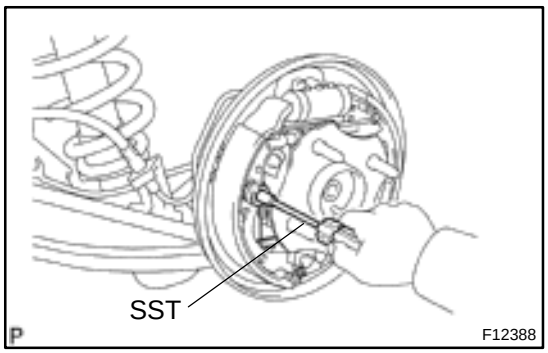

(c) Using SST, remove the cap, shoe hold–down spring and pin from the front shoe.

SST 09718–00010

(d) Remove the adjuster and return spring together with the front shoe.

(e) Using needle–nose pliers, remove the adjusting lever spring.

(f) Remove the automatic adjusting lever from the front shoe.

5. REMOVE REAR SHOE

(a) Using SST, remove the cap, shoe hole–down spring and pin.

SST 09718–00010



(b) Using needle–nose pliers, disconnect the parking brake cable from the parking brake lever, and remove the rear shoe.

6. REMOVE PARKING BRAKE LEVER

(a) Remove the C–washer.

(b) Remove the parking brake lever from the rear shoe.

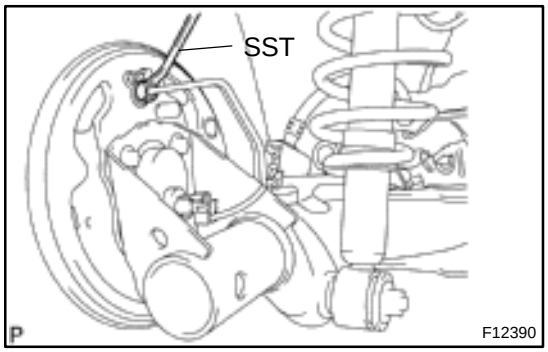

7. REMOVE WHEEL CYLINDER

(a) Using SST, disconnect the brake line. Use container to catch the brake fluid.

SST 09751–36011

Torque: 15 N·m (155 kgf·cm, 11 ft·lbf)

(b) Remove the bolt and the wheel cylinder.

Torque: 10 N·m (100 kgf·cm, 7 ft·lbf)

8. DISASSEMBLE WHEEL CYLINDER

(a) Remove the 2 boots from the wheel cylinder.

(b) Remove the 2 pistons from the wheel cylinder.

(c) Remove the spring from the wheel cylinder.

(d) Remove the 2 piston cups from each piston.

BR0K8–14

COMPONENTS

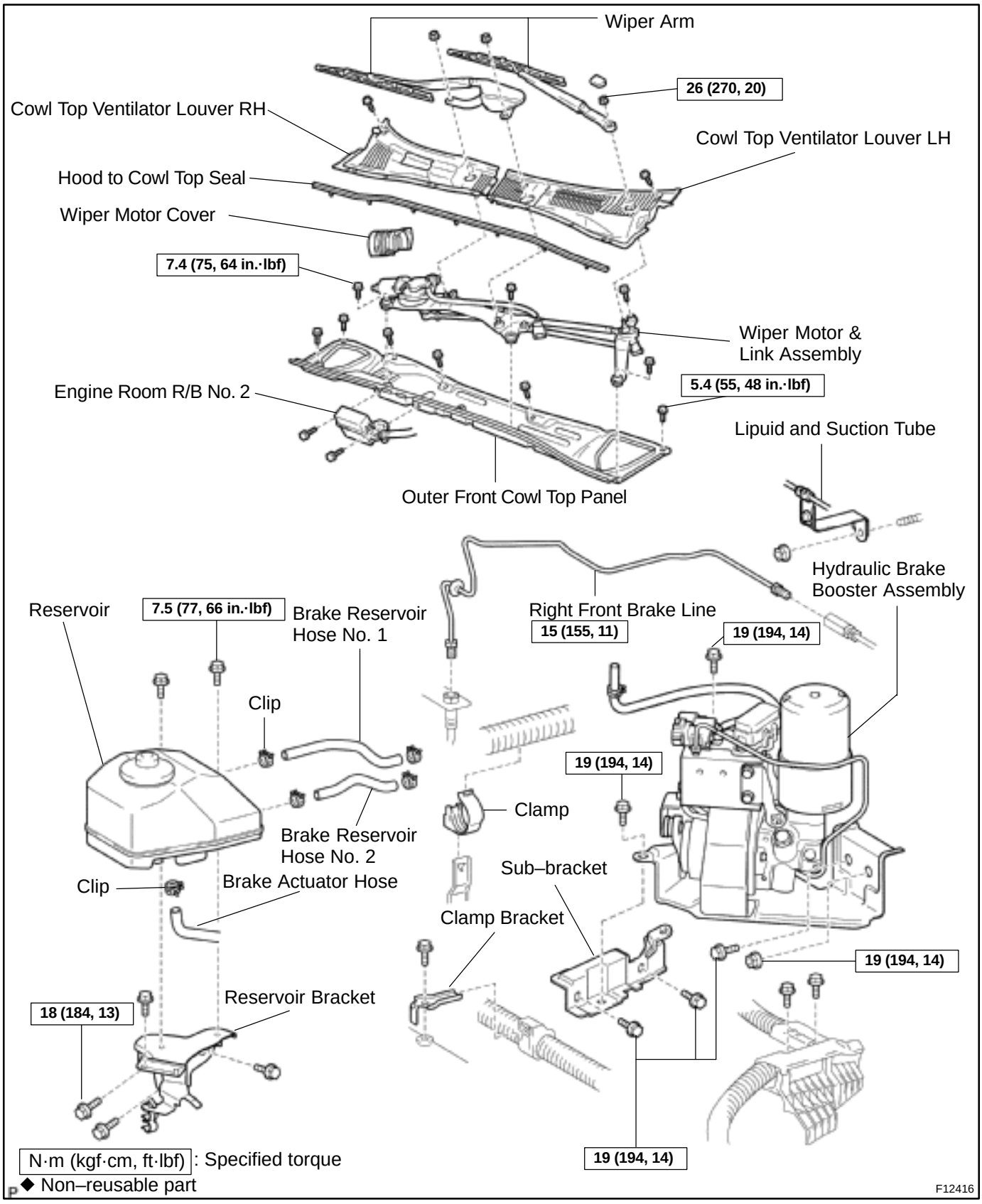

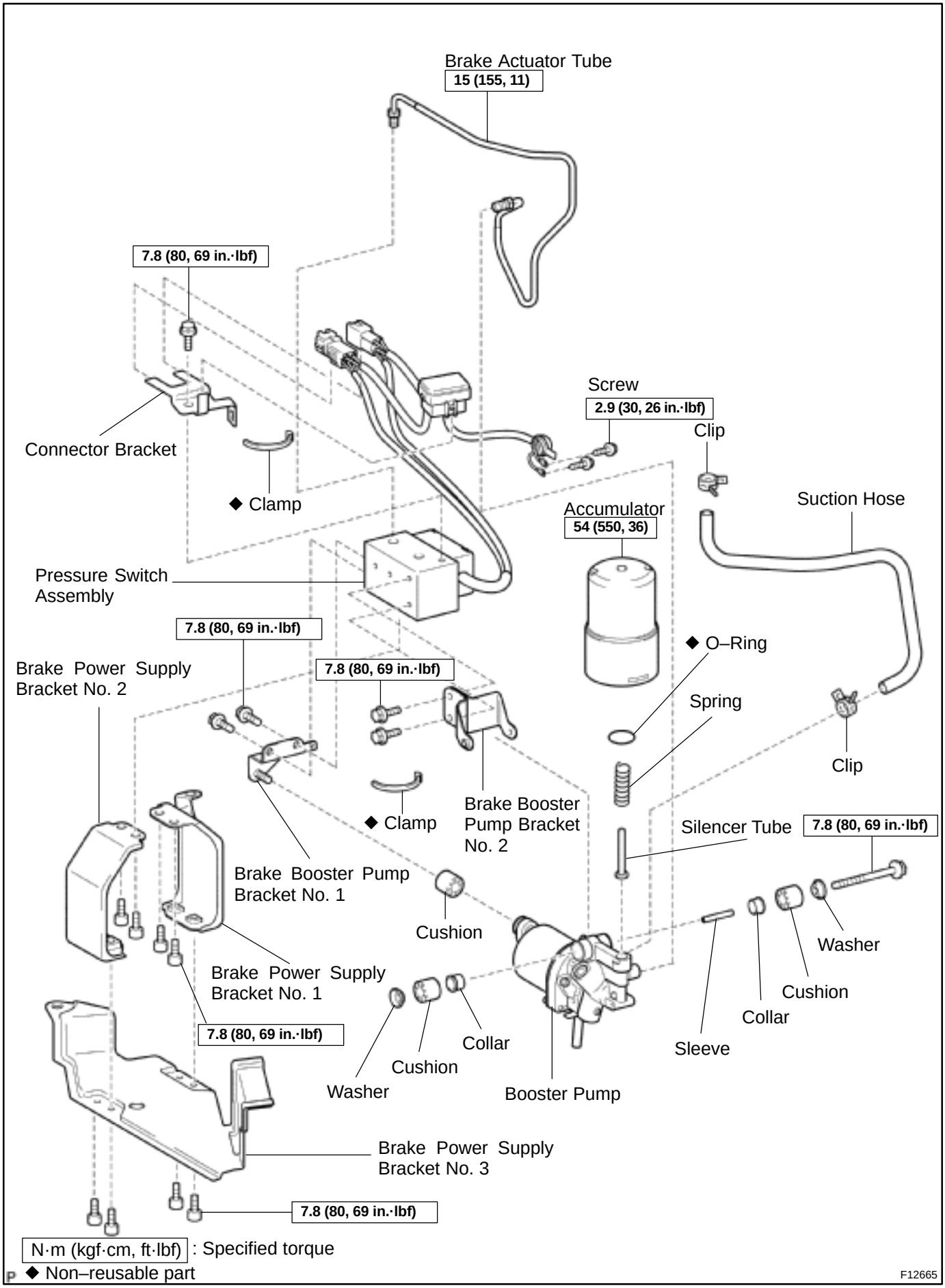
Brake Actuator Tube
15 (155, 11)
7.8 (80, 69 in.·lbf)
Screw
2.9 (30, 26 in.·lbf)
Clip
Connector Bracket
◆ Clamp
Accumulator
54 (550, 36)
Suction Hose
Pressure Switch Assembly
7.8 (80, 69 in.·lbf)
7.8 (80, 69 in.·lbf)
◆ O–Ring
Brake Power Supply Bracket No. 2
Spring
Clip
◆ Clamp
Brake Booster Pump Bracket No. 2
Silencer Tube
7.8 (80, 69 in.·lbf)
Brake Booster Pump Bracket No. 1
Cushion
Washer
Brake Power Supply Bracket No. 1
Cushion
Collar
7.8 (80, 69 in.·lbf)
Collar
Sleeve
Cushion
Washer
Booster Pump
Brake Power Supply Bracket No. 3
7.8 (80, 69 in.·lbf)
N·m (kgf·cm, ft·lbf) : Specified torque
◆ Non–reusable part
F12665

BR1JJ–01

REMOVAL

NOTICE:

Before starting the work, make sure that the ignition switch is OFF and depress the brake pedal more than 40 times.

HINT:

When a pressure in power supply system is released, reaction force becomes heavy.

NOTICE:

- **As high pressure is applied to the brake actuator tube, never deform it.**
- **Until the work is over, do not turn the ignition switch ON.**

1. DRAW OUT FLUID WITH SYRINGE

NOTICE:

Do not let brake fluid remain on a painted surface. Wash it off immediately.

2. REMOVE OUTER FRONT COWL TOP PANEL
(See page BO–32)

3. REMOVE RESERVOIR, BRAKE ACTUATOR HOSE, BRAKE RESERVOIR HOSE NO. 1, NO. 2 AND RESERVOIR BRACKET

(a) Disconnect the fluid level warning switch connector from the reservoir.

(b) Remove the 2 bolts from the reservoir.
Torque: 7.5 N·m (77 kgf·cm, 66 in.·lbf)

(c) Disconnect the 3 hoses from the reservoir and remove the reservoir and 3 hoses.

(d) Disconnect the 3 hoses from the reservoir bracket clamp.

(e) Remove the 4 bolts and reservoir bracket.
Torque: 18 N·m (184 kgf·cm, 13 ft·lbf)

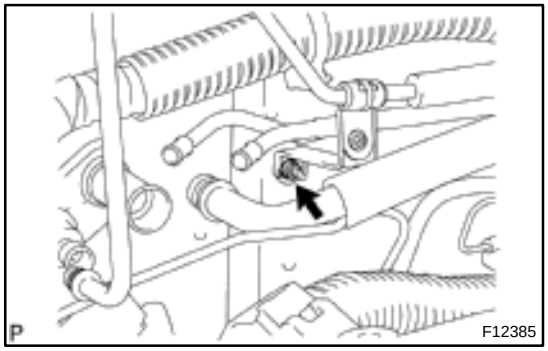

4. DISCONNECT LIQUID AND SUCTION TUBES

(a) Disconnect the liquid and suction tubes
(See page AC–25).

(b) Remove the nut and release the liquid and suction tubes.

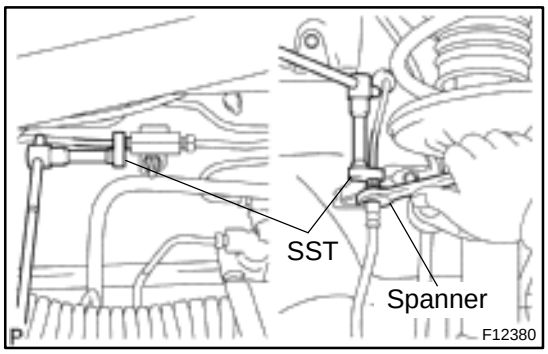

5. REMOVE RIGHT FRONT BRAKE LINE

(a) Using SST and spanner, disconnect the right front brake line from the flexible hose and 2 way.
SST 09023–00100
Torque: 15 N·m (155 kgf·cm, 11 ft·lbf)

(b) Pull out the brake line with the grommet from the body.

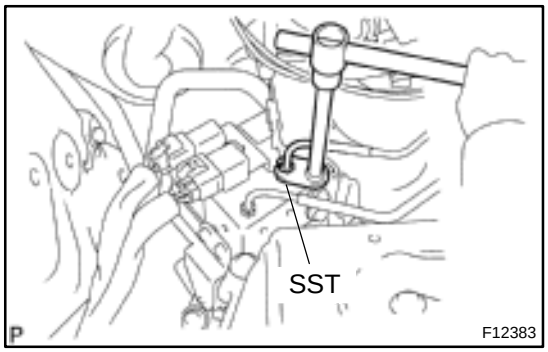

6. DISCONNECT BRAKE LINE

Using SST, disconnect the brake line from the hydraulic brake booster assembly.
SST 09023–00100
Torque: 15 N·m (155 kgf·cm, 11 ft·lbf)

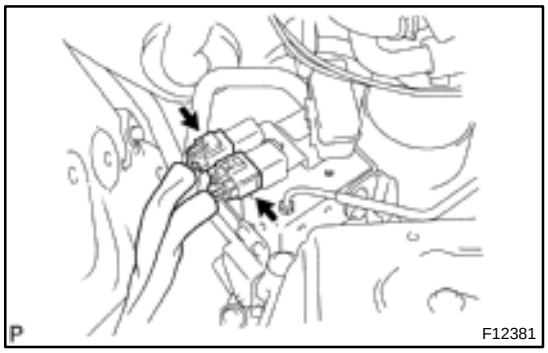

7. DISCONNECT 2 CONNECTORS

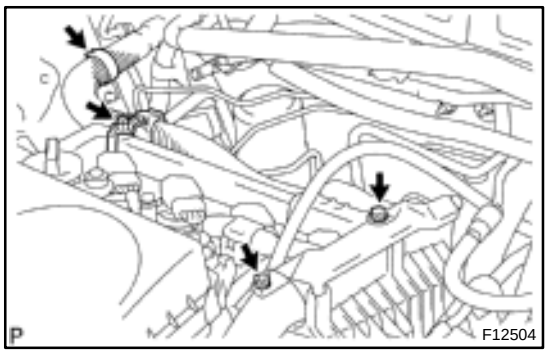

8. REMOVE HYDRAULIC BRAKE BOOSTER ASSEMBLY

(a) Remove the clamp, clamp bracket and 3 bolts.

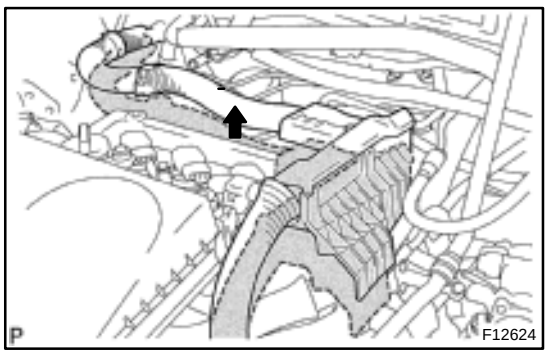

(b) Release the wire harness to remove the hydraulic brake booster assembly.

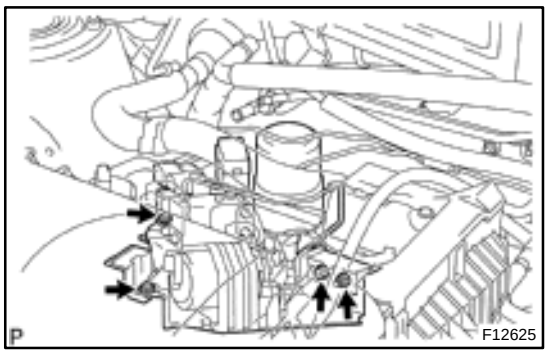

(c) Remove the 3 installation bolts and a nut.
Torque: 19 N·m (194 kgf·cm, 14 ft·lbf)

(d) Remove the hydraulic brake booster assembly.

(e) Remove the 2 bolts and sub–bracket.
Torque: 19 N·m (194 kgf·cm, 14 ft·lbf)

BR1JL–01

REMOVAL

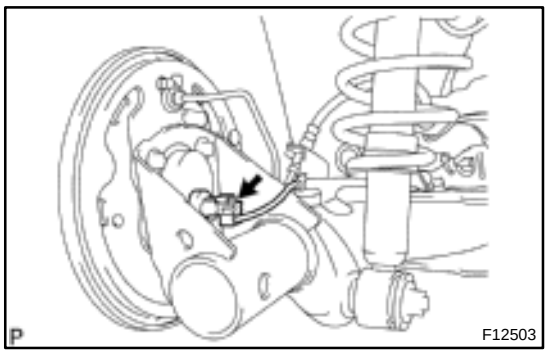

1. REMOVE REAR WHEEL

2. DISCONNECT SPEED SENSOR CONNECTOR

Disconnect the connector from the speed sensor.

3. REMOVE SPEED SENSOR WITH REAR AXLE HUB (See page SA–46)

4. REMOVE SPEED SENSOR

(a) Using a pin punch and hammer, drive out the 2 pins and remove the 2 attachments from SST.

SST 09520–00031

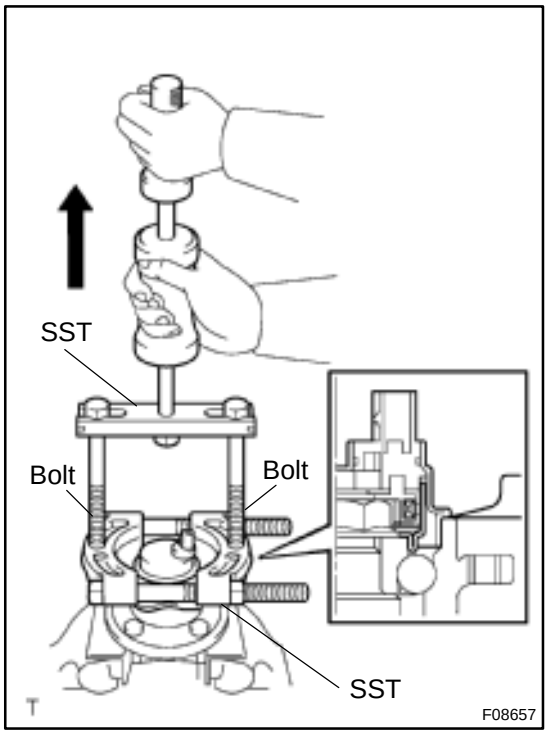

(b) Mount the rear axle hub in a soft jaw vise.

NOTICE:

Replace the axle hub assembly if it is dropped or a strong shock is given to it.

(c) Using SST and 2 bolts (Diameter: 12 mm, Pitch: 1.5 mm), remove the speed sensor.

SST 09520–00031 (09520–00040, 09521–00020), 09950–00020

NOTICE:

- **If a damage is inflicted to the sensor rotor, replace the axle hub assembly.**
- **Do not scratch the contacting surface of axle hub and speed sensor.**

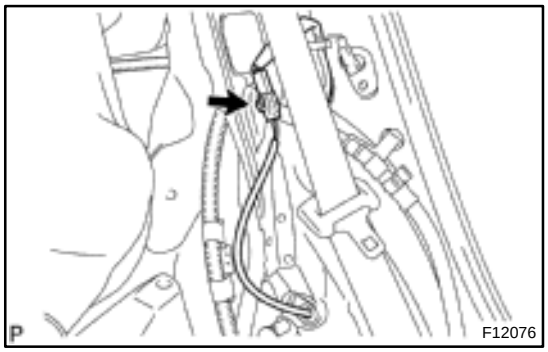

5. IF NECESSARY, REPLACE SPEED SENSOR WIRE HARNESS

(a) Remove the seat cushion, seatback and quarter trim (See page BO–83).

(b) Disconnect the speed sensor wire harness connector.

(c) Remove the 2 bolts, 2 nuts holding the sensor harness from the lower arm and body.
Torque: 5.5 N·m (56 kgf·cm, 49 in.·lbf)

(d) Replace the sensor wire harness with the grommet.

STEERING SYSTEM

SR08F–07

PRECAUTION

- **Care must be taken to replace parts properly because they could affect the performance of the steering system and result in a driving hazard.**
- **The PRIUS is equipped with SRS (Supplemental Restraint System) such as the driver airbag and passenger airbag. Failure to carry out service operation in the correct sequence could cause the SRS to unexpectedly deploy during servicing, possibly leading to a serious accident. Before servicing (including removal or installation of parts, inspection or replacement), be sure to read the precautionary notices in the RS section.**

TILT STEERING COLUMN

COMPONENTS

SR1BE–01

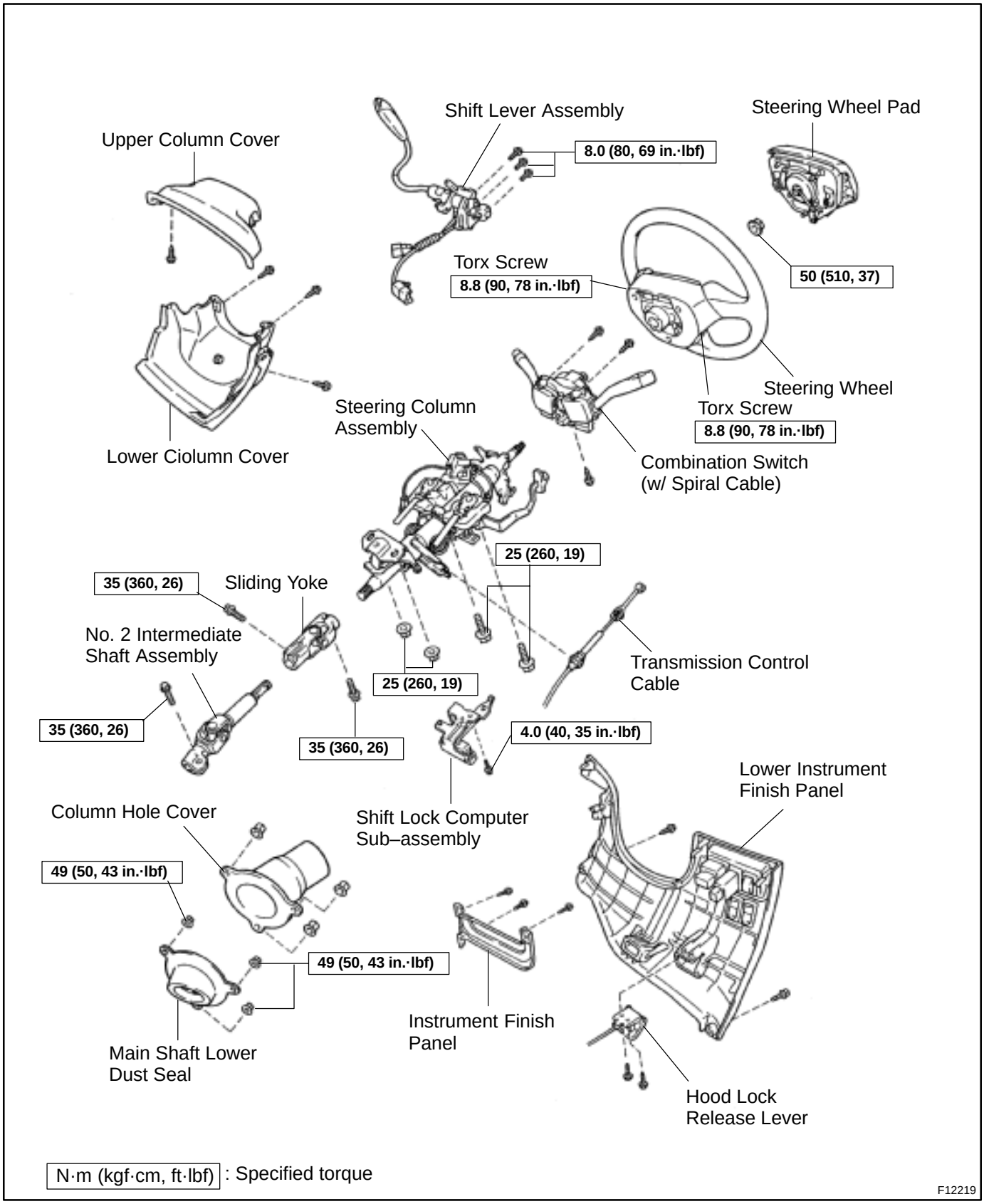

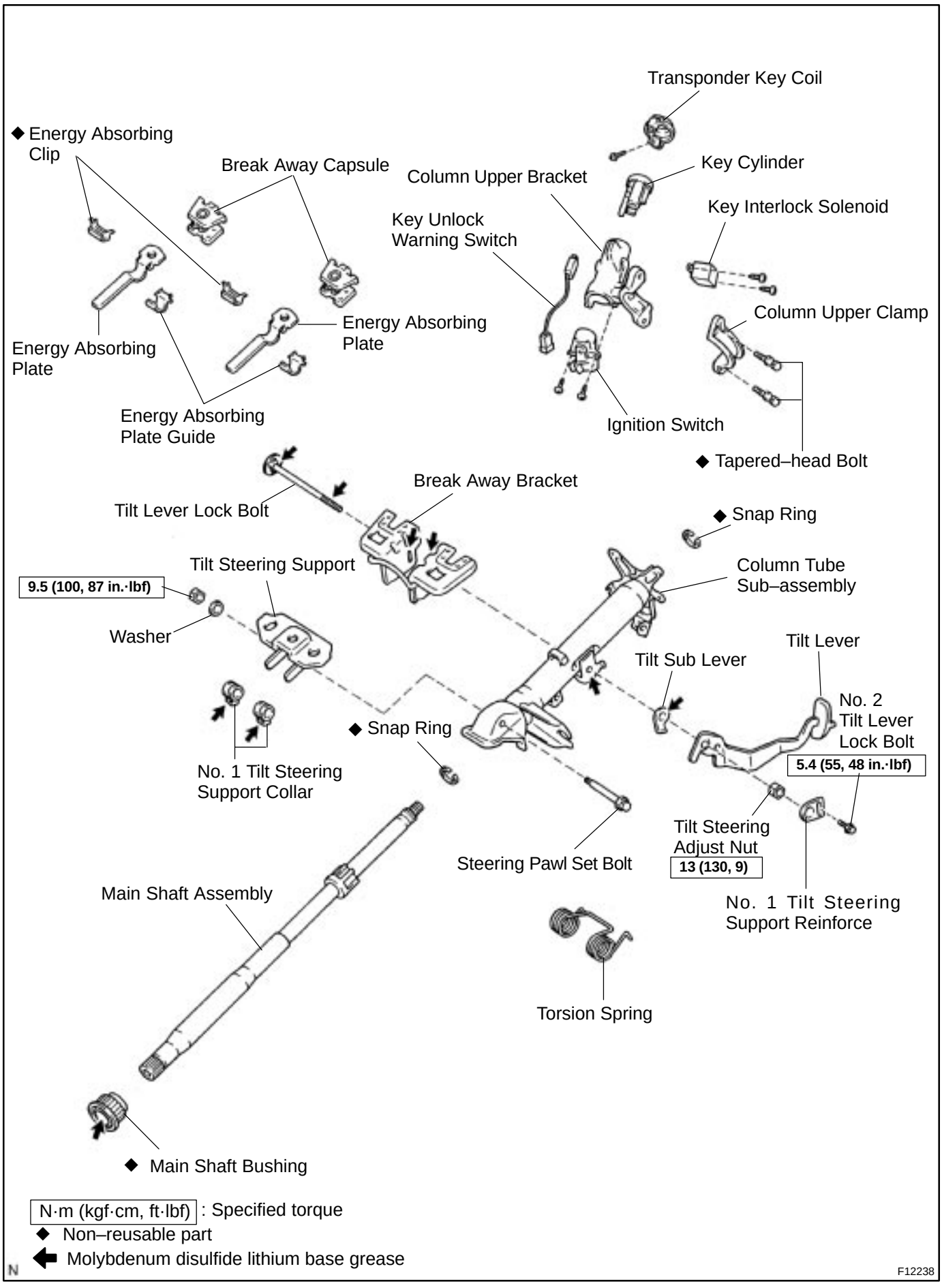
Transponder Key Coil
◆ Energy Absorbing Clip
Break Away Capsule
Column Upper Bracket
Key Cylinder
Key Interlock Solenoid
Key Unlock Warning Switch
Energy Absorbing Plate
Energy Absorbing Plate
Column Upper Clamp
Energy Absorbing Plate Guide
Ignition Switch
◆ Tapered–head Bolt
Break Away Bracket
Tilt Lever Lock Bolt
◆ Snap Ring
Tilt Steering Support
Column Tube Sub–assembly
9.5 (100, 87 in.·lbf)
Washer
Tilt Lever
Tilt Sub Lever
No. 2 Tilt Lever Lock Bolt
5.4 (55, 48 in.·lbf)
◆ Snap Ring
No. 1 Tilt Steering Support Collar
Tilt Steering Adjust Nut
13 (130, 9)
Steering Pawl Set Bolt
Main Shaft Assembly
No. 1 Tilt Steering Support Reinforce
Torsion Spring
◆ Main Shaft Bushing
N·m (kgf·cm, ft·lbf) : Specified torque
◆ Non–reusable part
Molybdenum disulfide lithium base grease
N
F12238

SR1BF–01

REMOVAL

1. REMOVE STEERING WHEEL PAD

NOTICE:

If the airbag connector is disconnected with the ignition switch at ON, DTCs will be recorded.

(a) Place the front wheels facing straight ahead.

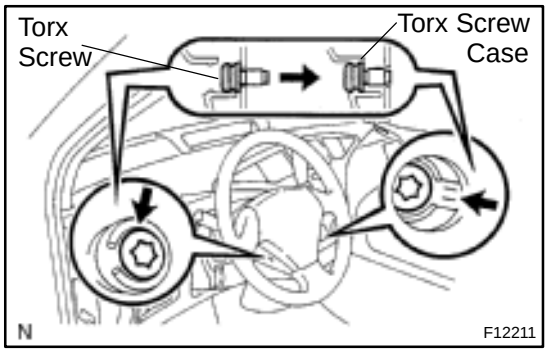

(b) Using a torx socket wrench, loosen the 2 torx screws until the groove along the screw circumference catches on the screw case.

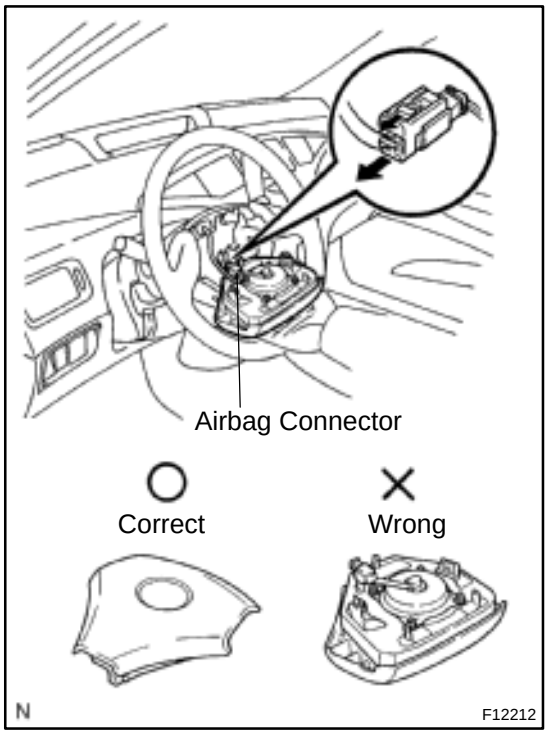

(c) Pull out the wheel pad from the steering wheel and disconnect the airbag connector.

(d) Disconnect the connector.

CAUTION:

- **When storing the wheel pad, keep the upper surface of the pad facing upward.**
- **Never disassemble the wheel pad.**

NOTICE:

When removing the wheel pad, take care not to pull the airbag wire harness.

2. REMOVE STEERING WHEEL

(a) Remove the steering wheel set nut.

(b) Place matchmarks on the steering wheel and main shaft assembly.

(c) Using SST, remove the steering wheel.

SST 09950–50012 (09951–05010, 09952–05010, 09953–05020, 09954–05020)

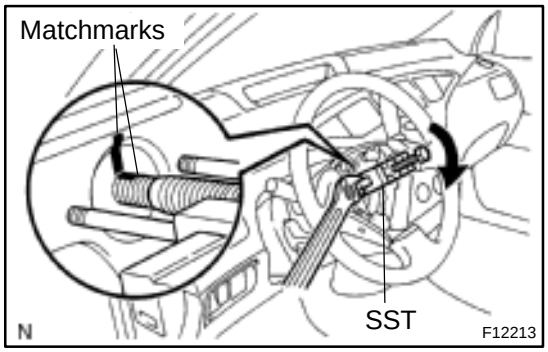

3. REMOVE LOWER INSTRUMENT FINISH PANEL

(a) Remove the 2 screws and disconnect hood lock release lever.

(b) Remove the screw and bolt.

(c) Disconnect the connectors and DLC3, and remove the lower instrument finish panel.

4. REMOVE UPPER AND LOWER COLUMN COVERS

(a) Remove the 3 screws and lower column cover.

(b) Remove the screw and upper column cover.

5. REMOVE COMBINATION SWITCH WITH SPIRAL CABLE

(a) Disconnect the connectors.

(b) Disconnect the airbag connector.

(c) Remove the 3 screws and combination switch with spiral cable.

6. REMOVE SPIRAL CABLE (See page BE–19)

NOTICE:

Do not disassemble the spiral cable or apply oil to it.

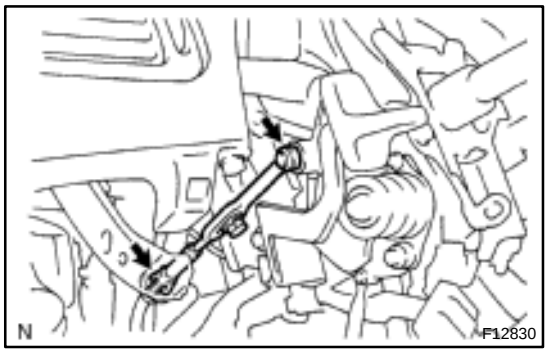

7. DISCONNECT TRANSMISSION CONTROL CABLE

8. REMOVE SHIFT LEVER ASSEMBLY (See page HT–50)

9. DISCONNECT COLUMN HOLE COVER

Remove the 3 clips and disconnect the column hole cover.

10. REMOVE SHIFT LOCK COMPUTER SUB–ASSEMBLY

Remove the screw and shift lock computer sub–assembly.

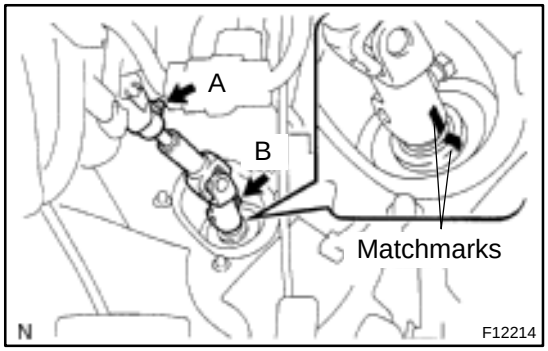

11. DISCONNECT NO. 2 INTERMEDIATE SHAFT ASSEMBLY

(a) Place matchmarks on the No. 2 intermediate shaft assembly and control valve shaft.

(b) Loosen the bolt ”A” and remove the bolt ”B”, then disconnect the No. 2 intermediate shaft assembly from the control valve shaft.

12. REMOVE INSTRUMENT FINISH PANEL

Remove the 3 screws and instrument finish panel.

13. REMOVE STEERING COLUMN ASSEMBLY

(a) Disconnect the connectors.

(b) Remove the 2 bolts, 2 nuts and steering column assembly.

14. REMOVE NO. 2 INTERMEDIATE SHAFT ASSEMBLY

Remove the bolt and No. 2 intermediate shaft assembly from the sliding yoke.

15. REMOVE SLIDING YOKE

Remove the bolt and sliding yoke from the main shaft assembly.

16. REMOVE COLUMN HOLE COVER

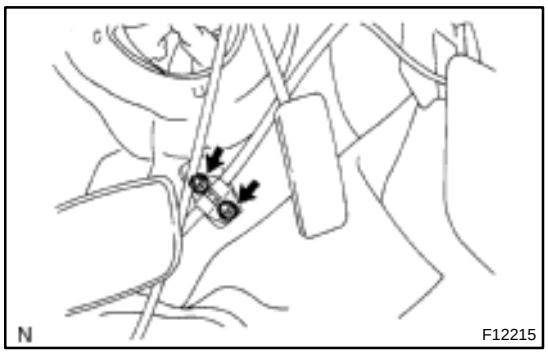

17. REMOVE MAIN SHAFT LOWER DUST SEAL

(a) Remove the 2 nuts and parking brake cable bracket.

(b) Remove the 2 bolts and disconnect the accelerator pedal.

(c) Remove the 3 nuts and main shaft lower dust seal.

SR1BG–01

DISASSEMBLY

NOTICE:

When using a vise, do not overtighten it.

1. REMOVE TRANSPONDER KEY COIL

Remove the screw and transponder key coil.

2. REMOVE COLUMN UPPER BRACKET AND COLUMN UPPER CLAMP

(a) Using a centering punch, mark the center of the 2 tapered–head bolts.

(b) Using a 3 – 4 mm (0.12 – 0.16 in.) drill, drill into the 2 bolts.

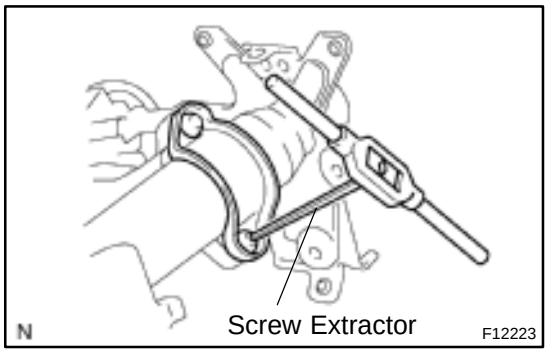

(c) Using a screw extractor, remove the 2 bolts, column upper bracket and column upper clamp.

3. REMOVE TILT STEERING SUPPORT

(a) Remove the look nut.

(b) Remove the washer, steering pawl set bolt and tilt steering support.

(c) Remove the 2 No. 1 tilt steering support collars.

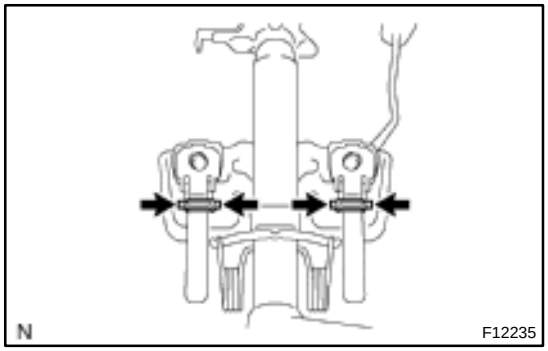

4. REMOVE 2 ENERGY ABSORBING PLATES

(a) Using pliers, remove the 2 energy absorbing clips.

(b) Remove the 2 energy absorbing plates, 2 energy absorbing guides, and 2 break away capsules.

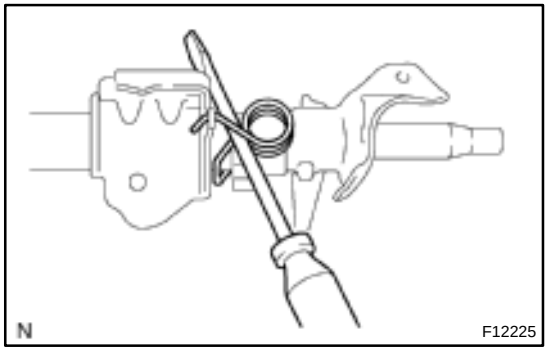

5. REMOVE TORSION SPRING

Using a screw driver, remove the torsion spring.

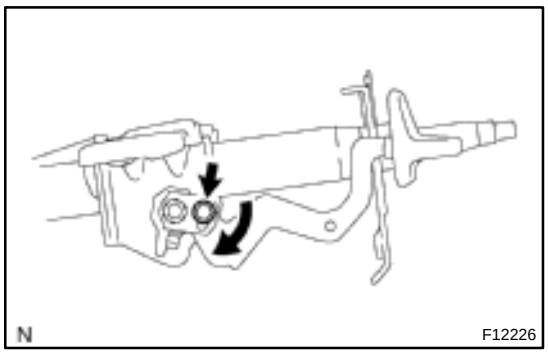

6. REMOVE TILT LEVER AND BREAK AWAY BRACKET

(a) Remove No. 2 tilt lever lock bolt and No. 1 tilt steering support reinforce.

HINT:

This bolt is left–handed one.

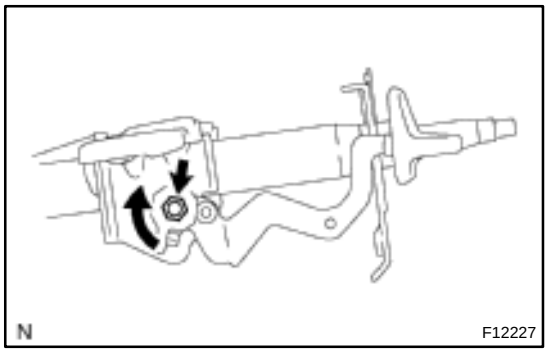

(b) Remove the tilt steering adjusting nut, tilt lever, tilt sub lever, tilt lever lock bolt and break away bracket.

HINT:

This bolt is left–handed one.

7. REMOVE MAIN SHAFT ASSEMBLY AND MAIN SHAFT BUSHING

(a) Using a snap ring expander, remove the snap ring on the upper side.

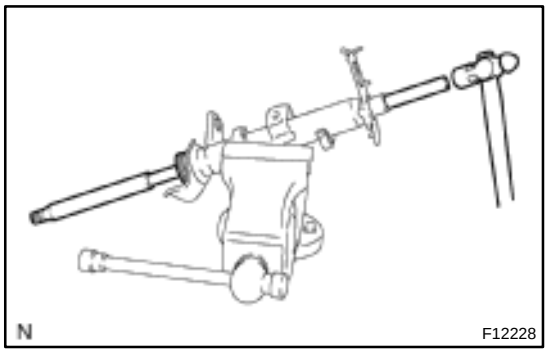

(b) Using a brass bar and a hammer, tap out the main shaft assembly with the main shaft bushing.

(c) Remove the main shaft bushing.

(d) Using a snap ring expander, remove the snap ring on the lower side.

SR1BI–01

REASSEMBLY

NOTICE:

When using a vise, do not overtighten it.

1. COAT PARTS INDICATED BY ARROWS WITH MOLYBDENUM DISULFIDE LITHIUM BASE GREASE (See page SR–4)

2. INSTALL MAIN SHAFT ASSEMBLY

(a) Using a snap ring expander, install a new snap ring on the lower side.

(b) Install the main shaft assembly.

(c) Using a snap ring expander, install a new snap ring on the upper side.

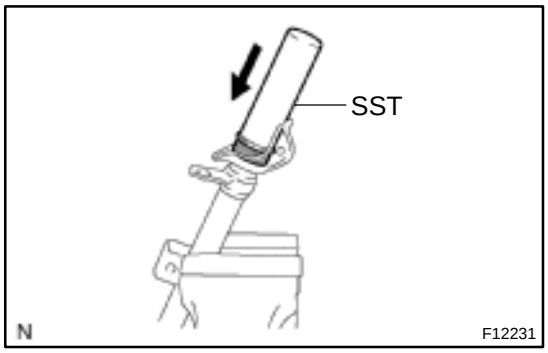

3. INSTALL MAIN SHAFT BUSING

(a) Coat a new bushing with molybdenum disulfide lithium base grease.

(b) Using SST and a hammer, tap in the main shaft bushing.
SST 09608–06041

4. INSTALL BREAK AWAY BRACKET AND TILT LEVER

(a) Install break away bracket, tilt lever lock bolt, tilt sub lever and tilt lever.

HINT:

Align the holes in the break away bracket with the projections of the tilt lever lock bolt and tilt sub lever.

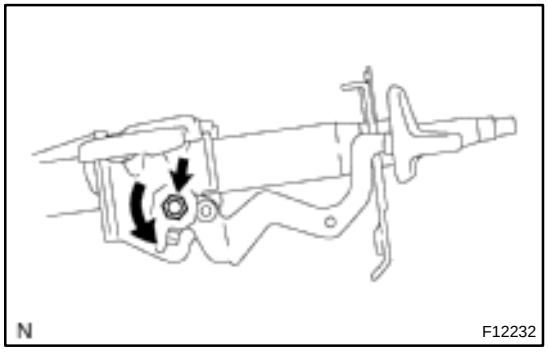

(b) Install the tilt steering adjusting nut by rotating it counterclockwise.
Torque: 13 N·m (130 kgf·cm, 9 ft·lbf)

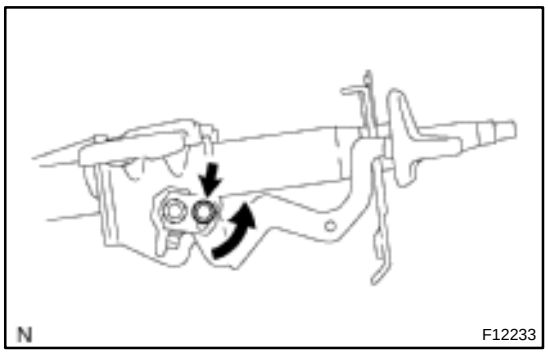

(c) Install the No. 1 tilt steering support reinforce with the No. 2 tilt lever lock bolt by turning it counterclockwise.
Torque: 5.4 N·m (55 kgf·cm, 48 in.·lbf)

HINT:
Align the No. 1 support reinforce with the nut to eliminate looseness by turning the No. 1 support reinforce counterclockwise a little, then torque the No. 2 tilt lever lock bolt.

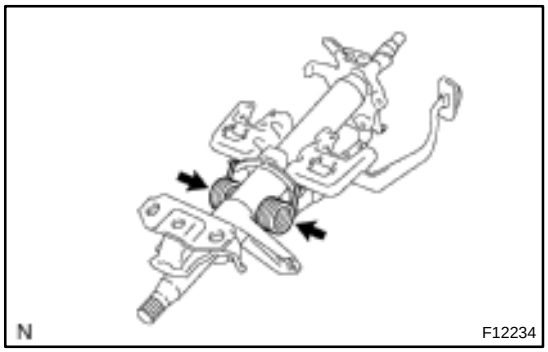

5. INSTALL TORSION SPRING

6. INSTALL 2 ENERGY ABSORBING PLATES

(a) Install the 2 break away capsules, 2 energy absorbing guides and 2 energy absorbing plates.

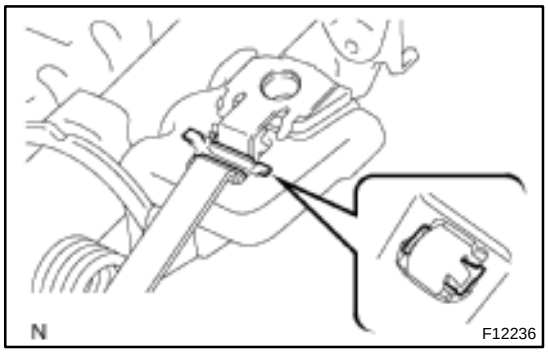

(b) Install the 2 new energy absorbing clips.

7. INSTALL TILT STEERING SUPPORT

(a) Install the 2 No. 1 tilt steering support collars.

(b) Install the tilt steering support, steering pawl set bolt, washer.

(c) Install the lock nut.
Torque: 9.5 N·m (100 kgf·cm, 87 in.·lbf)

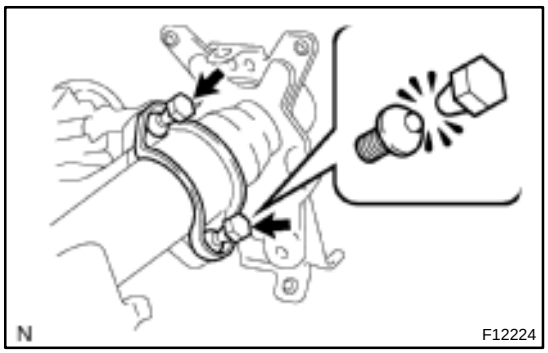

8. INSTALL COLUMN UPPER BRACKET AND COLUMN UPPER CLAMP

(a) Install the column upper bracket and column upper clamp with 2 new tapered–head bolts.

(b) Tighten the 2 tapered–head bolts until the bolt heads break off.

SR1BJ–01

INSTALLATION

1. INSTALL MAIN SHAFT LOWER DUST SEAL

(a) Install the main shaft lower dust seal with the 3 nuts.
Torque: 4.9 N·m (50 kgf·cm, 43 in.·lbf)

(b) Connect the accelerator pedal with the 2 bolts.

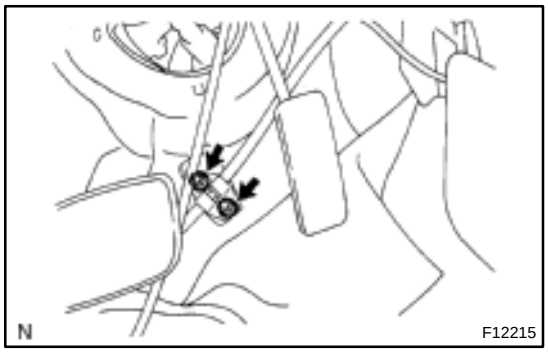

(c) Install the parking brake cable bracket with the 2 nuts.

2. INSTALL COLUMN HOLE COVER

3. INSTALL SLIDING YOKE

Install the sliding yoke to the main shaft assembly with the bolt.
Torque: 35 N·m (360 kgf·cm, 26 ft·lbf)

4. INSTALL NO. 2 INTERMEDIATE SHAFT ASSEMBLY

Temporarily install the No. 2 intermediate shaft assembly to the sliding yoke with the bolt.

5. INSTALL STEERING COLUMN ASSEMBLY

(a) Install the steering column assembly with the 2 bolts and 2 nuts.
Torque: 25 N·m (260 kgf·cm, 19 ft·lbf)

(b) Connect the connectors.

6. INSTALL INSTRUMENT FINISH PANEL

Install the instrument finish panel with the 3 screws.

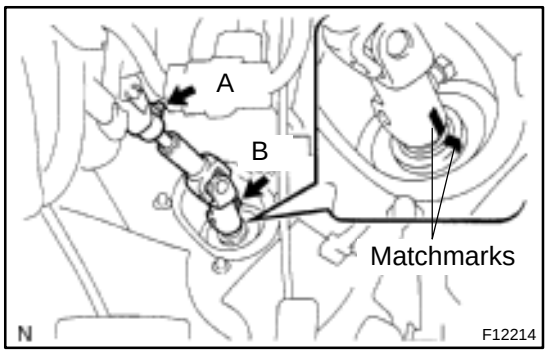

7. CONNECT NO. 2 INTERMEDIATE SHAFT ASSEMBLY

(a) Align the matchmarks on the No. 2 intermediate shaft assembly and control valve shaft.

(b) Install the bolt "B" and torque the bolt "A".
Torque: 35 N·m (360 kgf·cm, 26 ft·lbf)

8. INSTALL SHIFT LOCK COMPUTER SUB–ASSEMBLY

Install the shift lock computer sub–assembly with the screw.

9. CONNECT COLUMN HOLE COVER

Connect the column hole cover with the 3 clips.

10. INSTALL SHIFT LEVER ASSEMBLY
(See page HT–52)

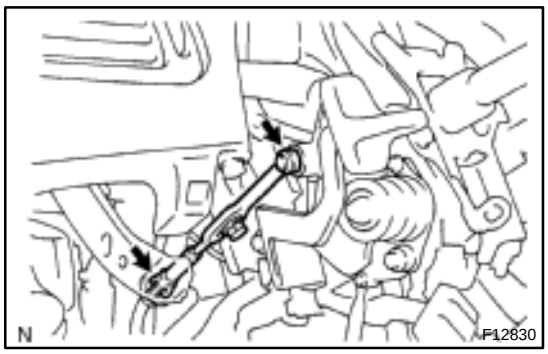

11. CONNECT TRANSMISSION CONTROL CABLE

12. INSTALL SPIRAL CABLE (See page BE–19)

13. INSTALL COMBINATION SWITCH WITH SPIRAL CABLE

(a) Install the combination switch with spiral cable with the 3 screws.

(b) Connect the airbag connector.

(c) Connect the connectors.

14. INSTALL UPPER AND LOWER COLUMN COVERS

(a) Install the upper column cover with the screw.

(b) Install the lower column cover with the 3 screws.

15. INSTALL LOWER INSTRUMENT FINISH PANEL

(a) Connect the connectors and DLC3 and install the lower instrument finish panel.

(b) Install the screw and bolt.

(c) Connect the hood lock release lever with the 2 screws.

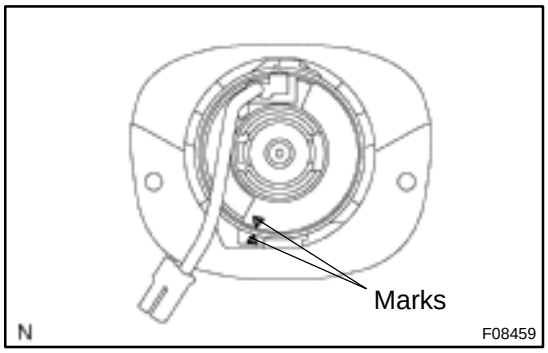

16. CENTER SPIRAL CABLE

(a) Check that the front wheels are facing straight ahead.

(b) Turn the cable counterclockwise by hand until it becomes harder to turn.

(c) Then rotate the cable clockwise about 2.5 turns to align the marks.

HINT:

The cable will rotate about 2.5 turns to either left or right of the center.

17. INSTALL STEERING WHEEL

(a) Align the matchmarks on the steering wheel and main shaft assembly.

(b) Install the steering wheel set nut.

Torque: 50 N·m (510 kgf·cm, 37 ft·lbf)

18. INSTALL STEERING WHEEL PAD

NOTICE:

- **Never use airbag parts from another vehicle. When replacing parts, replace with new ones.**
- **Make sure the wheel pad is installed with the specified torque.**
- **If the wheel pad has been dropped, or there are cracks, dents or other defects in the case or connector, replace the wheel pad with a new one.**
- **When installing the wheel pad, take care that the wirings do not interfere with other parts and that they are not pinched between other parts.**

(a) Connect the connector.

(b) Connect the airbag connector.

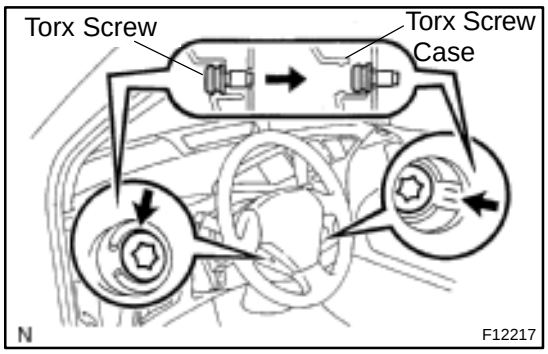

(c) Install the steering wheel pad after confirming that the circumference groove of the torx screws is caught on the screw case.

(d) Using a torx socket wrench, torque the 2 screws.
Torque: 8.8 N·m (90 kgf·cm, 78 in.·lbf)

19. CHECK STEERING WHEEL CENTER POINT

20. PERFORM CALIBRATION OF TORQUE SENSOR ZERO POINT (See page DI–454)

ELECTRIC POWER STEERING GEAR

SR1BK–01

COMPONENTS

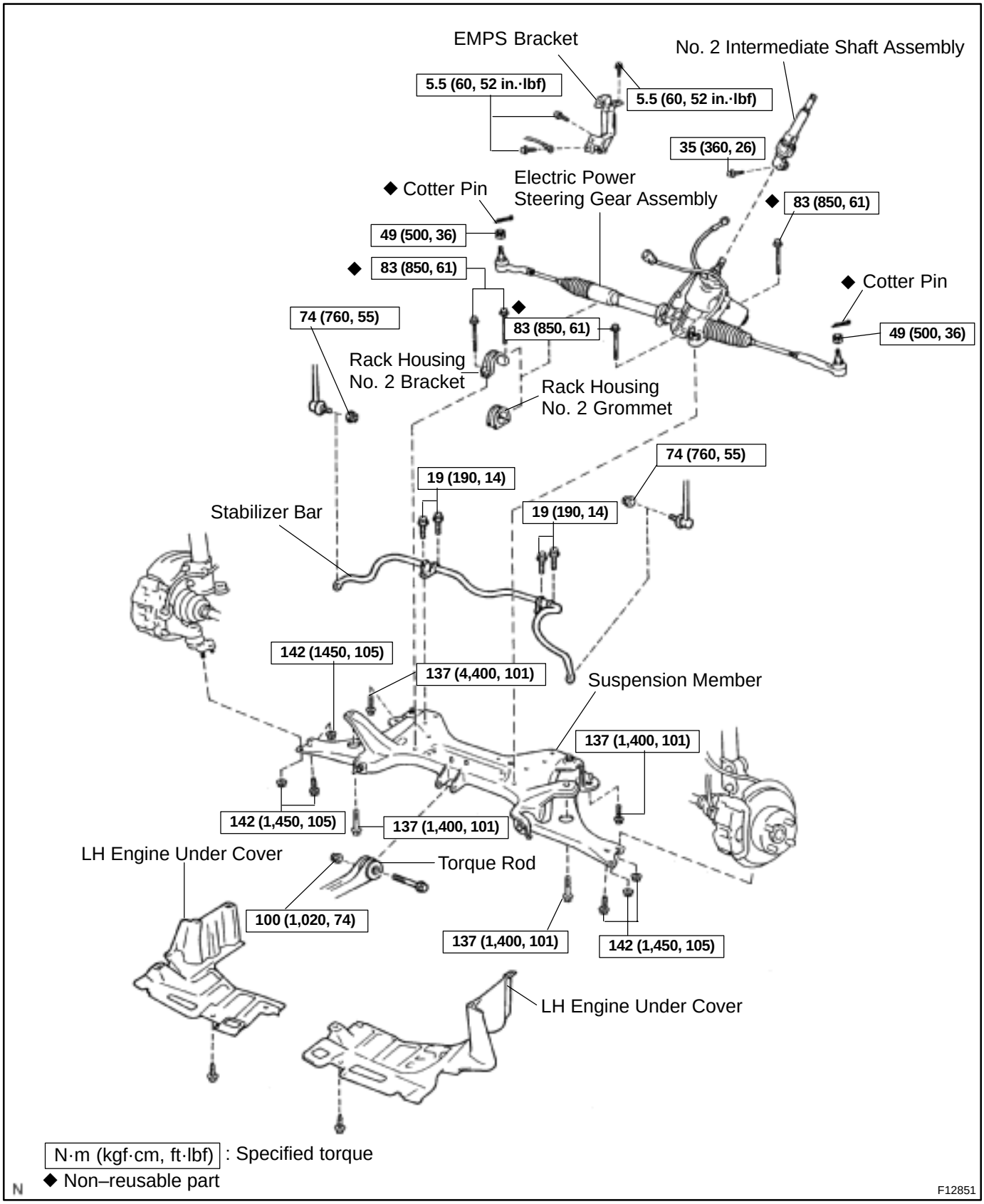

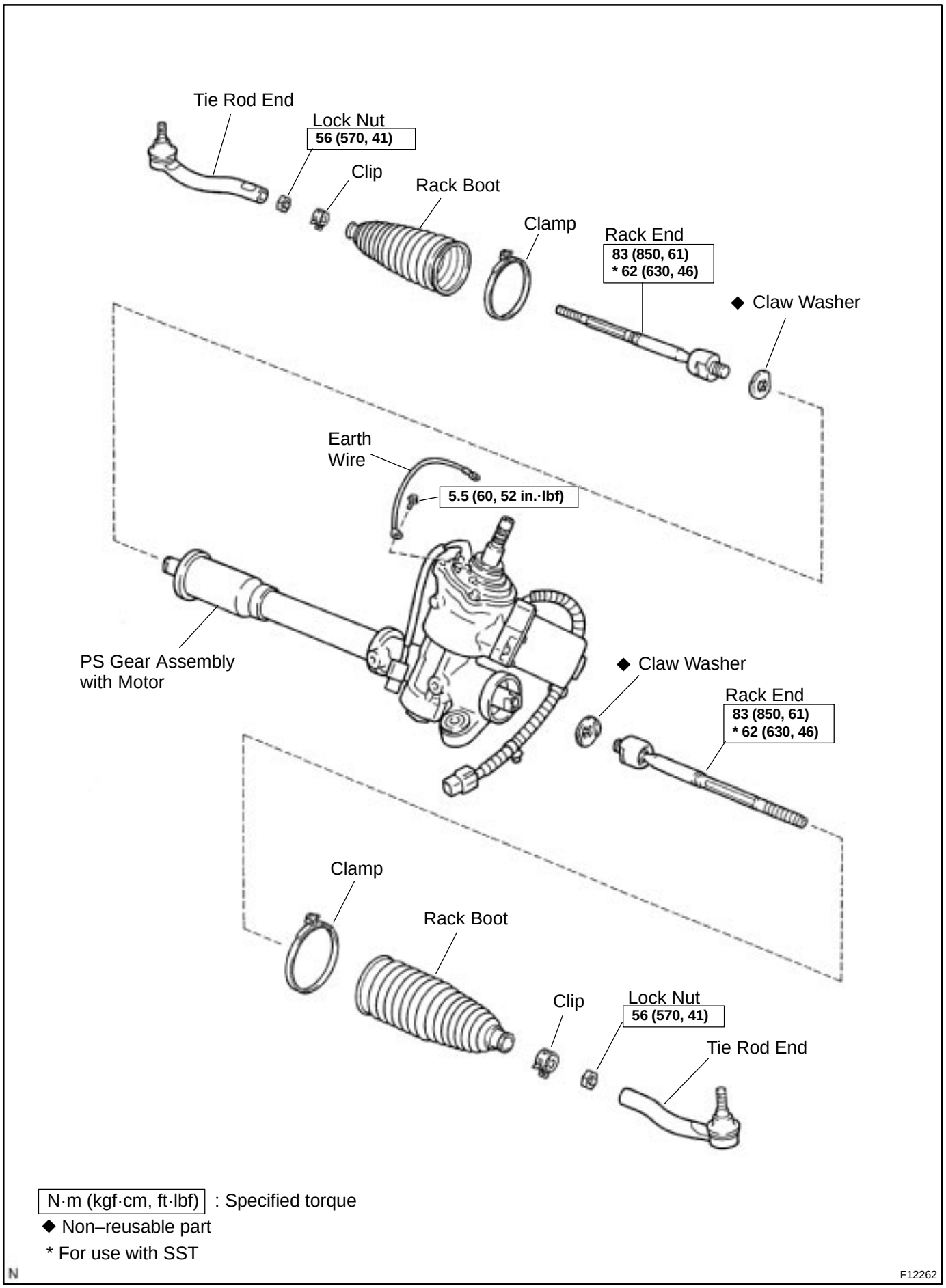
Tie Rod End
Lock Nut
56 (570, 41)
Clip
Rack Boot
Clamp
Rack End
83 (850, 61)
* 62 (630, 46)
◆ Claw Washer
Earth
Wire
5.5 (60, 52 in.·lbf)
PS Gear Assembly
with Motor
◆ Claw Washer
Rack End
83 (850, 61)
* 62 (630, 46)
Clamp
Rack Boot
Clip
Lock Nut
56 (570, 41)
Tie Rod End
N·m (kgf·cm, ft·lbf) : Specified torque
◆ Non–reusable part
* For use with SST
N
F12262

SR1BL–01

REMOVAL

NOTICE:

Remove the steering wheel assembly before the steering gear removal, because there is possibility of breaking of the spiral cable.

1. PLACE FRONT WHEELS FACING STRAIGHT AHEAD

2. REMOVE STEERING WHEEL PAD (See page SR–6)

3. REMOVE STEERING WHEEL (See page SR–6)

4. REMOVE RH AND LH ENGINE UNDER COVERS

5. DISCONNECT RH AND LH TIE ROD ENDS (See page SA–9)

6. DISCONNECT STABILIZER BAR (See page SA–41)

7. DISCONNECT LOWER SUSPENSION ARM FROM LOWER BALL JOINT (See page SA–41)

8. DISCONNECT 2 CONNECTORS AND EMPS BRACKET

(a) Disconnect the 2 connectors.

(b) Disconnect the 2 clamps.

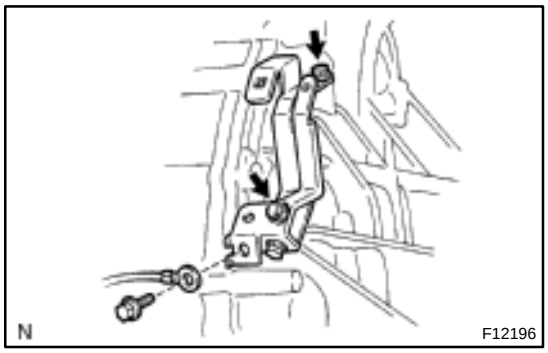

(c) Remove the bolt and disconnect the earth wire.

(d) Remove the 2 bolts and EMPS bracket.

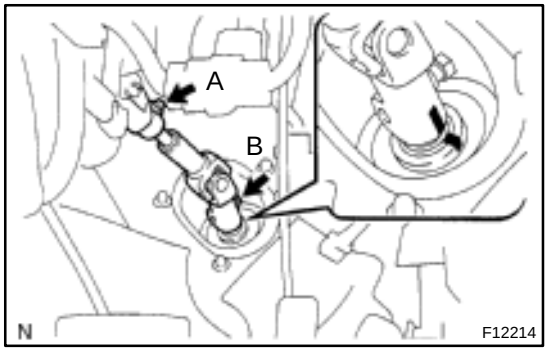

9. DISCONNECT NO. 2 INTERMEDIATE SHAFT ASSEMBLY

(a) Place the matchmarks on the No. 2 intermediate shaft assembly and control valve shaft.

(b) Loosen the bolt ”A” and remove the bolt ”B” then disconnect the No. 2 intermediate shaft assembly from the control valve shaft.

10. DISCONNECT TORQUE ROD (See page SA–41)

11. REMOVE SUSPENSION MEMBER AND ELECTRIC POWER STEERING GEAR ASSEMBLY (See page SA–41)

12. REMOVE ELECTRIC POWER STEERING GEAR ASSEMBLY

(a) Remove the stabilizer bar (See page SA–41).

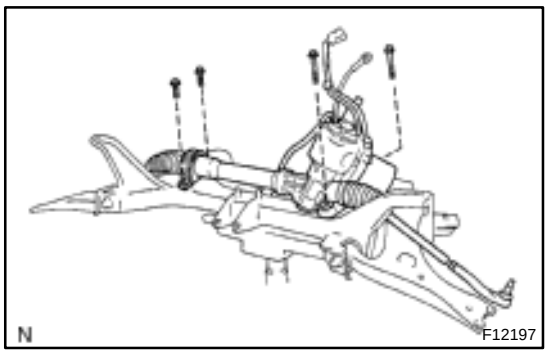

(b) Remove the 4 bolts and electric power steering gear assembly from the front suspension member.

(c) Remove the bracket and grommet from the electric power steering gear assembly.

SR1BM–01

DISASSEMBLY

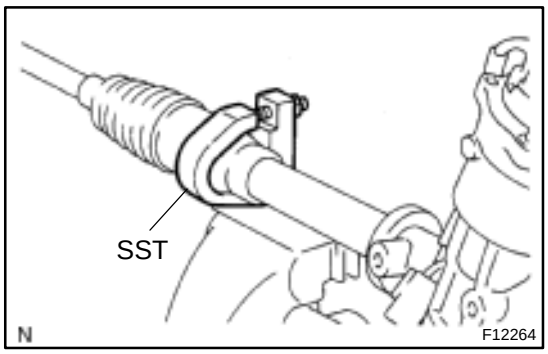

NOTICE:

When using a vise, do not overtighten it.

1. SECURE ELECTRIC POWER STEERING GEAR ASSEMBLY IN VISE

Using SST, secure the electric power steering gear assembly in a vise.

SST 09612 – 00012

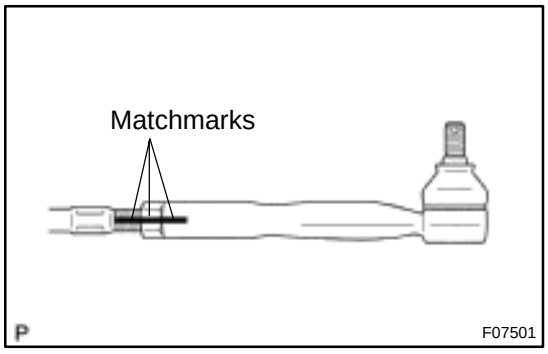

2. REMOVE RH AND LH TIE ROD ENDS AND LOCK NUTS

(a) Place matchmarks on the tie rod end, lock nut and rock end.

(b) Loosen the lock nut and remove the tie rod end and lock nut.

(c) Employ the same manner described above to the other side.

3. REMOVE RH AND LH CLAMPS, CLIPS AND RACK BOOTS

(a) Remove the clamp, clip and rack boot.

NOTICE:

Be careful not to damage the boot.

HINT:

Mark the RH and LH rack boots.

(b) Employ the same manner described above to the other side.

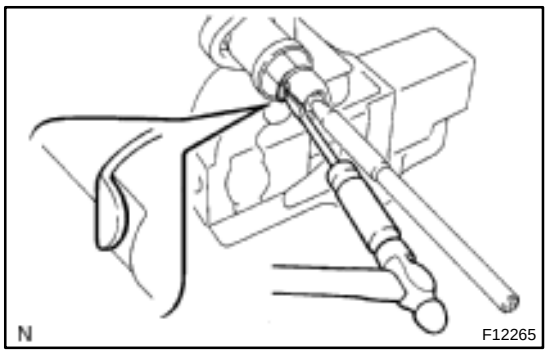

4. REMOVE RH AND LH RACK ENDS CLAW WASHERS

(a) Using a screwdriver and a hammer, unstake the washer.

NOTICE:

Avoid any impact on the steering rack.

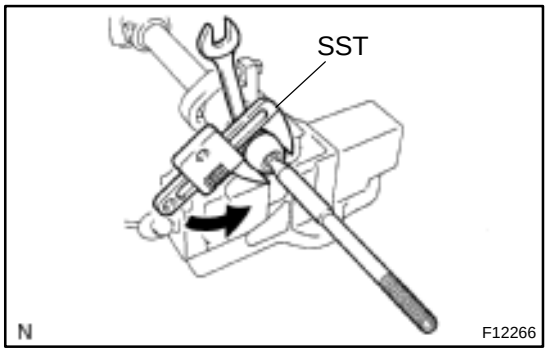

(b) Using a spanner, hold the steering rack steadily and using SST, remove the rack end.

SST 09922 – 10010

NOTICE:

Use SST 09922 – 10010 in the direction shown in the illustration.

HINT:

Mark the RH and LH rack ends.

(c) Remove the claw washer.

(d) Employ the same manner described above to the other side.

5. REMOVE EARTH WIRE

Remove the bolt and earth wire.

SR1BN–01

REASSEMBLY

NOTICE:

When using a vise, do not overtighten it.

1. INSTALL EARTH WIRE

Install the earth wire with the bolt.

Torque: 5.5 N·m (60 kgf·cm, 52 in.·lbf)

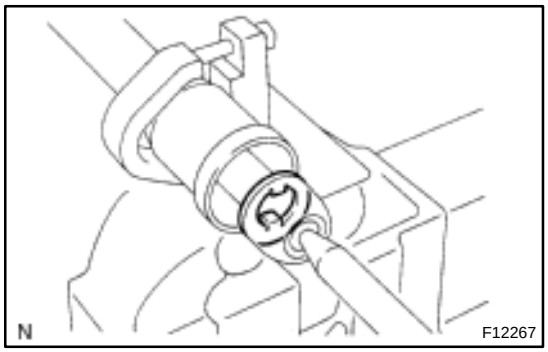

2. INSTALL RH AND LH CLAW WASHERS AND RACK ENDS

(a) Install a new claw washer and temporarily install the rack end.

HINT:

Align the claws of the claw washer with the steering rack grooves.

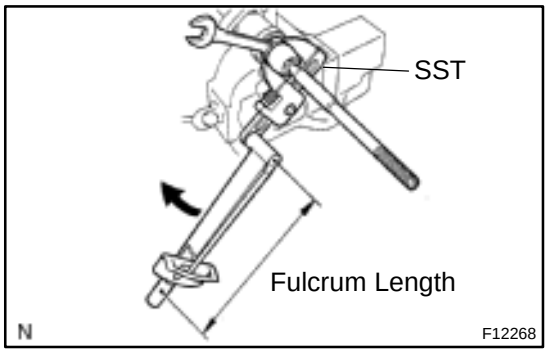

(b) Using a spanner, hold the steering rack steadily and using SST, torque the rack end.

SST 09922 – 10010

Torque: 62 N·m (630 kgf·cm, 46 ft·lbf)

NOTICE:

Use SST 09922 – 10010 in the direction shown in the illustration.

HINT:

Use a torque wrench with a fulcrum length of 380 mm (14.96 in.).

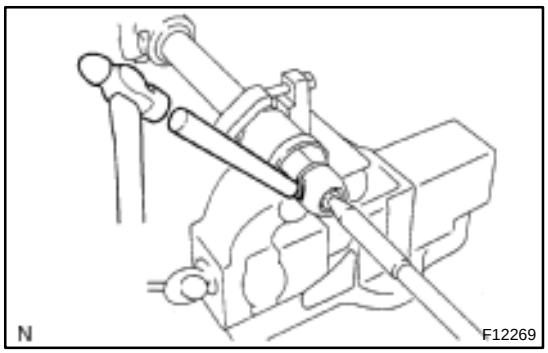

(c) Using a brass bar and a hammer, stake the claw washer.

NOTICE:

Avoid any impact on the steering rack.

(d) Employ the same manner described above to the other side.

3. INSTALL RH AND LH RACK BOOTS, CLIPS AND CLAMPS

(a) Ensure that the steering rack hole is not clogged with grease.

HINT:

If the hole is clogged, the pressure inside the boot will change after it is assembled and the steering wheel is turned.

(b) Install the boot, clip and clamp.

NOTICE:

Be careful not to damage or twist the boot.

(c) Employ the same manner described above to the other side.

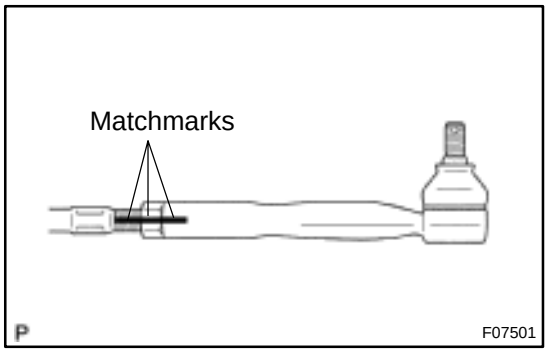

4. INSTALL RH AND LH TIE ROD ENDS AND LOCK NUT

(a) Screw the lock nut and tie rod end onto the rack end and the matchmarks aligned.

(b) After adjusting toe–in. torque the nut (See page SA–4).

(c) Employ the same manner described above to the other side.

SR1BO–01

INSTALLATION

1. INSTALL ELECTRIC POWER STEERING GEAR ASSEMBLY

(a) Install the grommet and bracket to the electric power steering gear assembly.

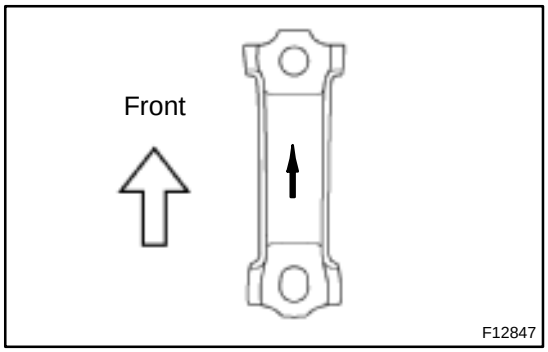

HINT:
Install the bracket with the inscribed mark facing to the front of the vehicle.

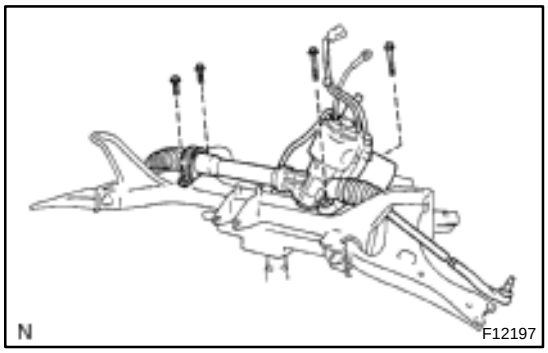

(b) Install the electric power steering gear assembly with the 4 new bolts to the front suspension member.
Torque: 83 N·m (850 kgf·cm, 61 ft·lbf)

(c) Install the stabilizer bar (See page SA–43).

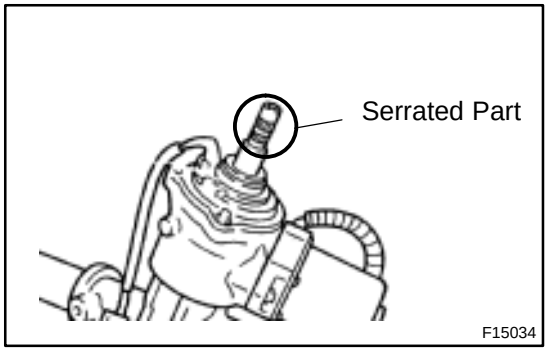

(d) To prevent the main shaft lower dust seal from damaging, wind vinyl tape on the serrated part of the control valve shaft.

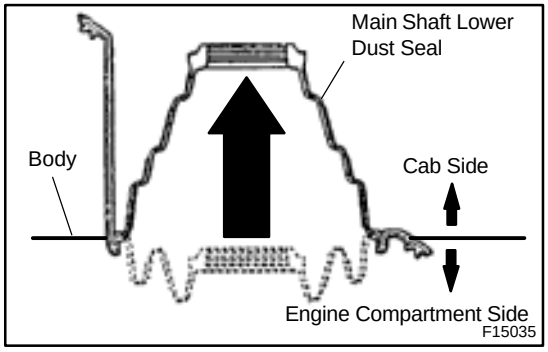

(e) Turn over the main shaft lower dust seal from the engine compartment side to the cab.

2. INSTALL SUSPENSION MEMBER AND ELECTRIC POWER STEERING GEAR ASSEMBLY (See page SA–43)

3. CONNECT TORQUE ROD (See page SA–43)

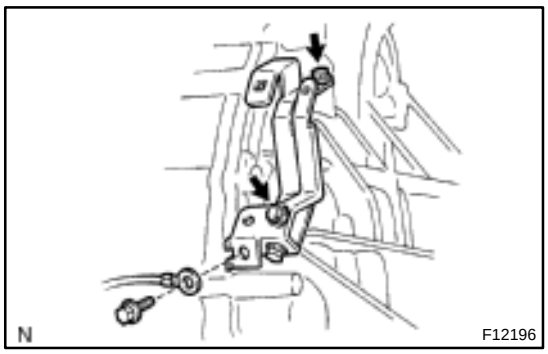

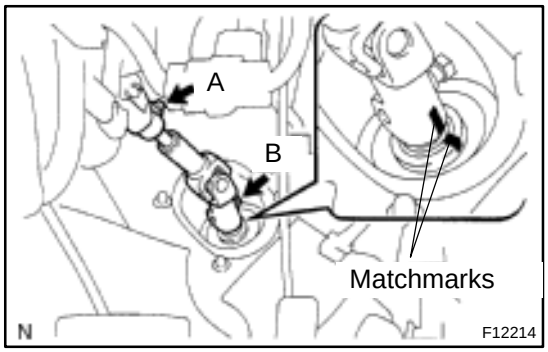

4. CONNECT EMPS BRACKET AND 2 CONNECTORS

(a) Connect the EMPS bracket with the 2 bolts.
Torque: 5.5 N·m (60 kgf·cm, 52 in.·lbf)

(b) Connect the earth wire with the bolt.
Torque: 5.5 N·m (60 kgf·cm, 52 in.·lbf)

(c) Connect the 2 clamps.

(d) Connect the 2 connectors.

5. CONNECT LOWER SUSPENSION ARM TO LOWER BALL JOINT (See page SA–43)

6. CONNECT STABILIZER BAR (See page SA–43)

7. CONNECT NO. 2 INTERMEDIATE SHAFT ASSEMBLY

(a) Put the dust seal back to the engine compartment side.

(b) Remove the vinyl tape from the serrated part of the control valve shaft.

(c) Align the matchmarks on the No. 2 intermediate shaft assembly and control valve shaft.

(d) Install the bolt ”B” and torque the bolt ”A”.
Torque: 35 N·m (360 kgf·cm, 22 ft·lbf)

8. CONNECT RH AND LH TIE ROD ENDS (See page SA–14)

9. PLACE FRONT WHEELS FACING STRAIGHT AHEAD

HINT:

Do it with the front of the vehicle jacked up.

10. CENTER SPIRAL CABLE (See page SR–14)

11. INSTALL STEERING WHEEL

(a) Align the matchmarks on the steering wheel and steering column main shaft.

(b) Temporarily tighten the steering wheel set nut.

12. CHECK STEERING WHEEL CENTER POINT

13. TORQUE STEERING WHEEL SET NUT
Torque: 50 N·m (510 kgf·cm, 37 ft·lbf)

14. INSTALL STEERING WHEEL PAD (See page SR–14)

15. CHECK FRONT WHEEL ALIGNMENT

16. PERFORM CALIBRATION OF TORQUE SENSOR ZERO POINT (See page DI–454)

SRS AIRBAG

RS0JO–06

PRECAUTION

CAUTION:

- **The PRIUS is equipped with SRS, which comprises a driver airbag, front passenger airbag and side airbag. Failure to carry out service operations in the correct sequence could cause the SRS to unexpectedly deploy during servicing, possibly leading to a serious accident. Further, if a mistake is made in servicing the SRS, it is possible that the SRS may fail to operate when required. Before performing servicing (including removal or installation of parts, inspection or replacement), be sure to read the following items carefully, then follow the correct procedures described in the repair manual.**
- **Work must be started 90 seconds after the ignition switch is turned to the "LOCK" position and the negative (–) terminal cable is disconnected from the battery.**
  (The SRS is equipped with a back–up power source so that if work is started within 90 seconds from disconnecting the negative (–) terminal cable of the battery, the SRS may be deployed.)
- **Do not expose the steering wheel pad, front passenger airbag assembly, side airbag assembly, airbag sensor assembly, front airbag sensor or side airbag sensor assembly directly to hot air or flames.**

NOTICE:

- **Malfunction symptoms of the SRS are difficult to confirm, so the DTCs become the most important source of information when troubleshooting. When troubleshooting the SRS, always inspect the DTCs before disconnecting the battery.**
- **Even in cases of a minor collision where the SRS does not deploy, the steering wheel pad, front passenger airbag assembly, side airbag assembly, airbag sensor assembly, front airbag sensor and side airbag sensor assembly should be inspected.**
  (See page RS–14, RS–28, RS–41, RS–53, RS–58 and RS–63)
- **Before repairs, remove the airbag sensor if shocks are likely to be applied to the sensor during repairs.**
- **Never use SRS parts from another vehicle. When replacing parts, replace them with new parts.**
- **Never disassemble and repair the steering wheel pad, front passenger airbag assembly, side airbag assembly, airbag sensor assembly, front airbag sensor or side airbag sensor assembly in order to reuse it.**
- **If the steering wheel pad, front passenger airbag assembly, side airbag assembly, airbag sensor assembly, front airbag sensor or side airbag sensor assembly has been dropped, or if there are cracks, dents or other defects in the case, bracket or connector, replace it with new one.**
- **Use a volt/ohmmeter with high impedance (10 kΩ/V minimum) for troubleshooting the system's electrical circuits.**
- **Information labels are attached to the periphery of the SRS components. Follow the instructions on the notices.**
- **After work on the SRS is completed, perform the SRS warning light check (See page DI–497).**
- **When the negative (–) terminal cable is disconnected from the battery, the memory of the clock and audio system will be canceled. So before starting work, make a record of the contents memorized in the audio memory system. When work is finished, reset the audio systems as they were before and adjust the clock. To avoid erasing the memory in each memory system, never use a back– up power supply from outside the vehicle.**
- **If the vehicle is equipped with a mobile communication system, refer to the precaution in the IN section.**

RS0R8–01

OPERATION

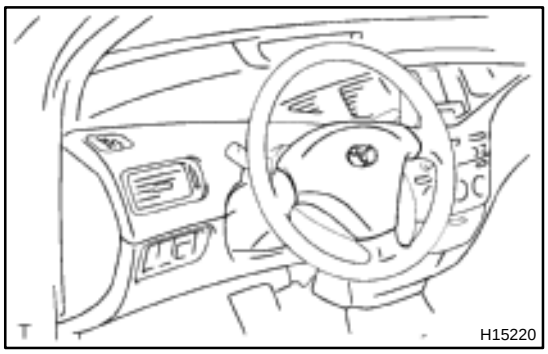

1. STEERING WHEEL PAD (with AIRBAG)

The inflater and bag of the SRS are stored in the steering wheel pad and cannot be disassembled. The inflater contains a squib, igniter charge, gas generator, etc., and inflates the bag when instructed by the airbag sensor assembly.

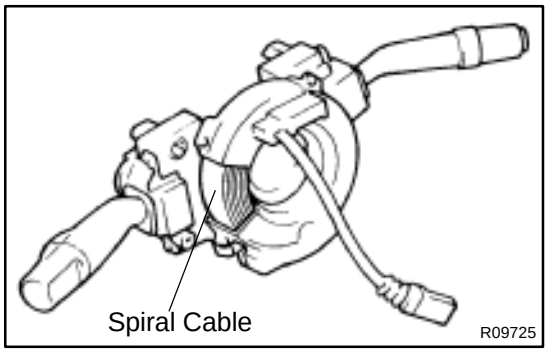

2. SPIRAL CABLE (in COMBINATION SWITCH)

A spiral cable is used as an electrical joint from the vehicle body side to the steering wheel.

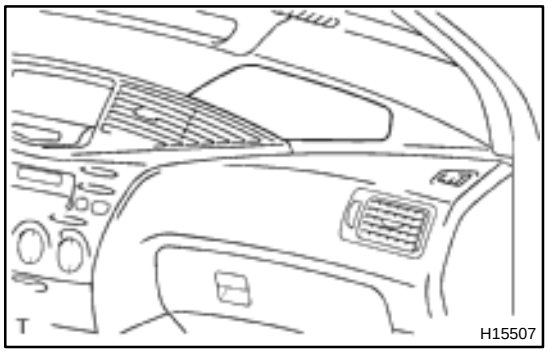

3. FRONT PASSENGER AIRBAG ASSEMBLY

The inflater and bag of the SRS are stored in the front passenger airbag assembly and cannot be disassembled. The inflater contains a squib, igniter charge, gas generator, etc., and inflates the bag when instructed by the airbag sensor assembly.



4. SIDE AIRBAG ASSEMBLY

The inflater and bag of the SRS side airbag are stored in the side airbag assembly and cannot be disassembled. The inflater contains a squib, igniter charge, gas generator, etc., and inflates the bag when instructed by the side airbag sensor assembly.

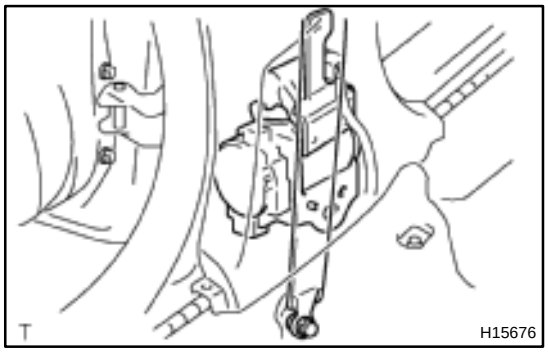

5. SEAT BELT PRETENSIONER

The seat belt pretensioner system is a component of the front seat outer belt. The pretensioner contains a squib, gas generator, wire, piston, etc., and operates in the event of a frontal collision. The seat belt pretensioner cannot be disassembled.

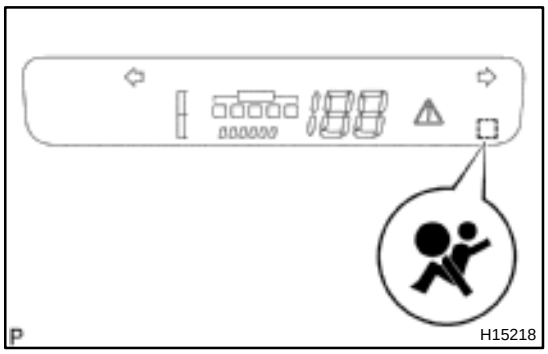

6. SRS WARNING LIGHT

The SRS warning light is located on the combination meter. It goes on to alert the driver of trouble in the system when a malfunction is detected in the airbag sensor assembly self–diagnosis. In normal operation conditions when the ignition switch is turned to the ON position, the light goes on for about 6 seconds and then goes off.

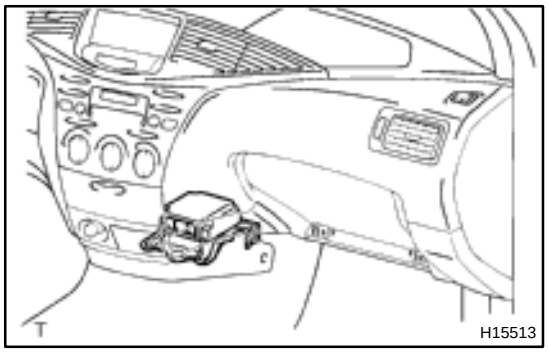

7. AIRBAG SENSOR ASSEMBLY

The airbag sensor assembly is mounted on the floor inside the lower center finish panel. The airbag sensor assembly consists of an airbag sensor, safing sensor, diagnosis circuit, ignition control, drive circuit, etc. It receives signals from the airbag sensor, front airbag sensor, side airbag sensor assembly and door side airbag assembly and judges whether the SRS must be activated or not. The airbag sensor assembly cannot be disassembled.

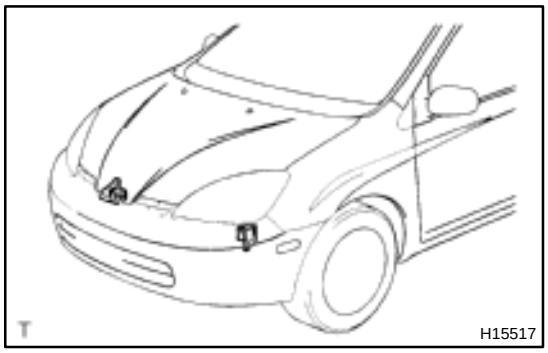

8. FRONT AIRBAG SENSOR

The front airbag sensor is mounted inside each of the side members. The sensor unit is a mechanical type. When the sensor detects deceleration force above a predetermined limit, contact is made in the sensor, sending a signal to the airbag sensor assembly. The front airbag sensor cannot be disassembled.

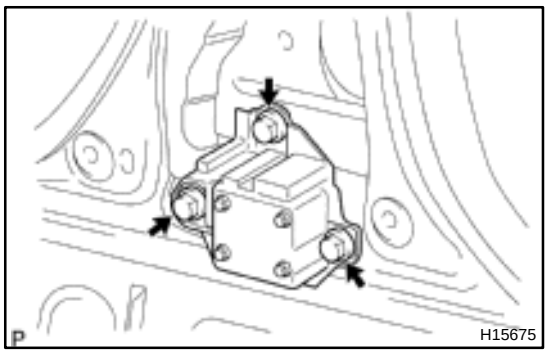

9. SIDE AIRBAG SENSOR ASSEMBLY

The side airbag sensor assembly is mounted in the LH and RH center pillars. The side airbag sensor assembly consists of a lateral deceleration sensor, safing sensor, diagnosis circuit, etc. It sends signals to the airbag sensor assembly to judge whether the SRS side airbag must be activated or not. The side airbag sensor assembly cannot be disassembled.

10. SRS CONNECTORS

HINT:

SRS connectors are located as shown in the following illustration.

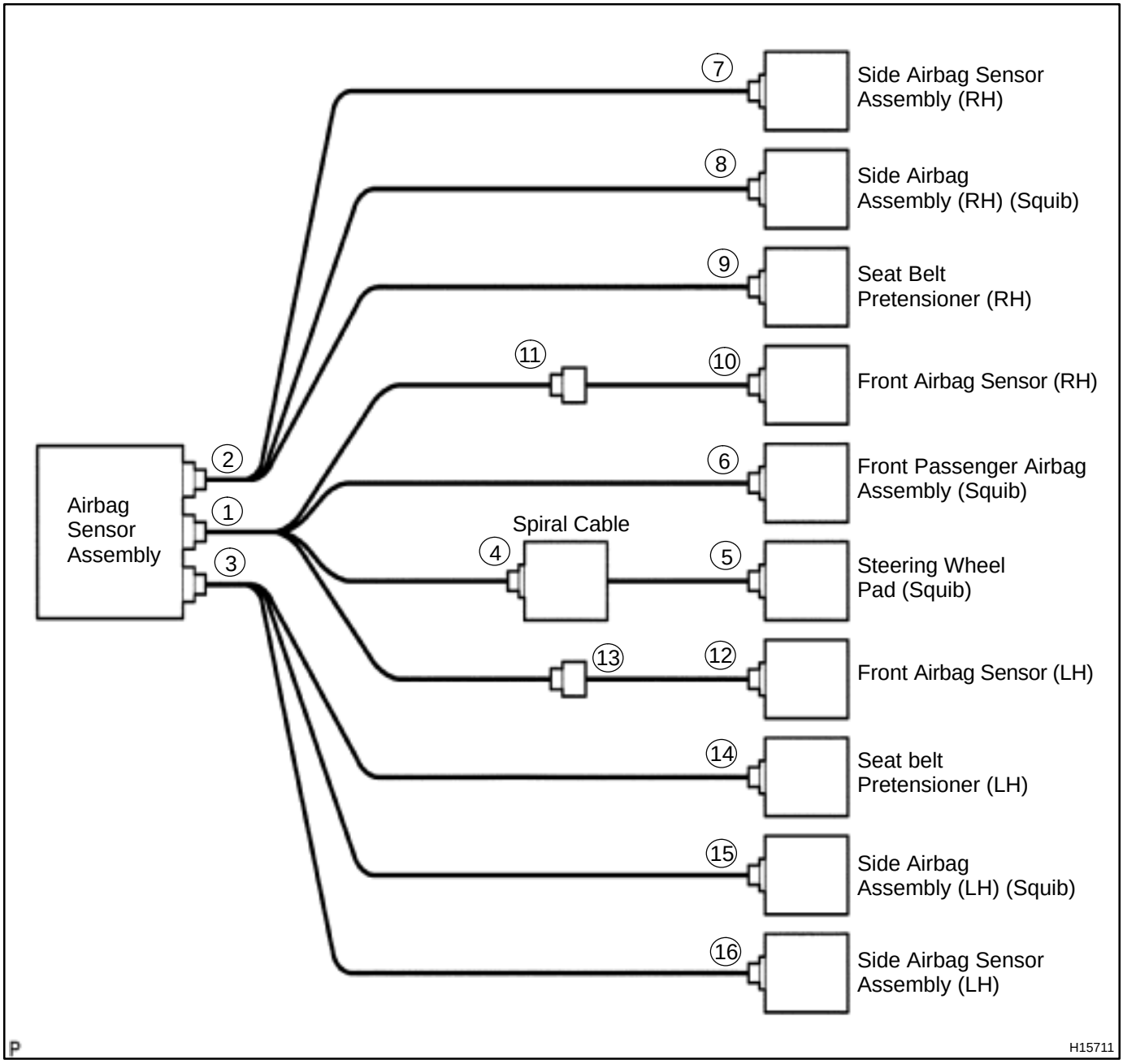

No.	Item	Application
(1)	Terminal Twin–Lock Mechanism	Connectors 1, 2, 3, 4, 5, 6, 7, 8, 9, 10, 11, 12, 13, 14, 15, 16
(2)	Airbag Activation Prevention Mechanism	Connectors 1, 2, 3, 4, 5, 6, 8, 9, 14, 15
(3)	Electrical Connection Check Mechanism	Connectors 1, 2, 3

(a) All connectors in the SRS are colored in yellow to distinguish them from other connectors. Connectors having special functions and specifically designed for the SRS are used in the locations shown on the previous page to ensure high reliability. These connectors use durable gold–plated terminals.

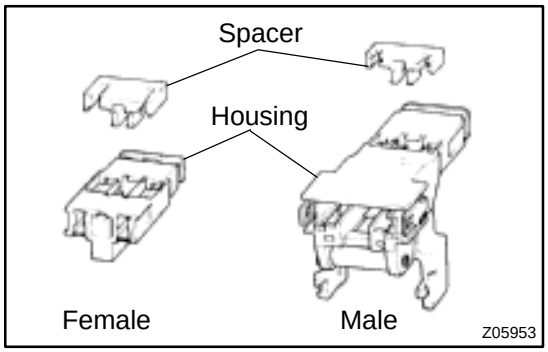

(1) Terminal Twin–Lock Mechanism
Each connector has a two–piece component consisting of a housing and a spacer. This design enables the terminal to be locked securely by two locking devices (the retainer and the lance) to prevent terminals from coming out.

(2) Airbag Activation Prevention Mechanism
Each connector contains a short spring plate. When the connector is disconnected, the short spring plate automatically connects positive (+) terminal and negative (–) terminal of the squib.

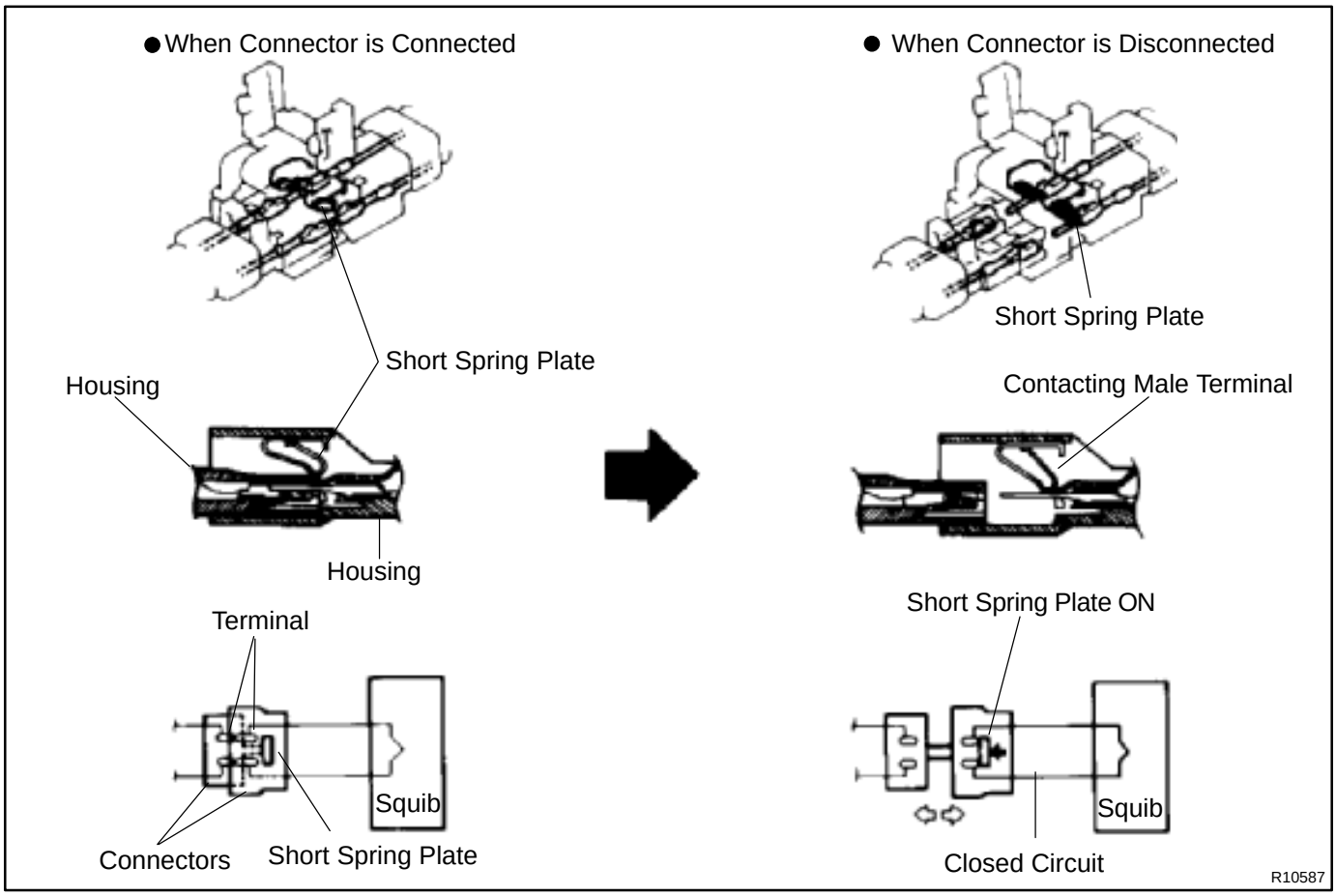

HINT:
The type of connector is shown in the diagram on the previous page.

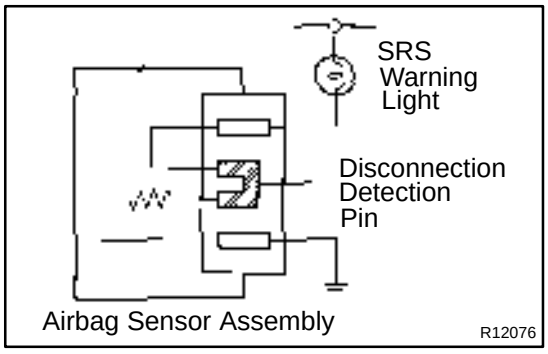

(3) Electrical Connection Check Mechanism
This mechanism electrically checks that connectors are connected correctly and completely. The electrical connection check mechanism is designed so that the disconnection detection pin connects with the diagnosis terminals when the connector housing lock is locked.

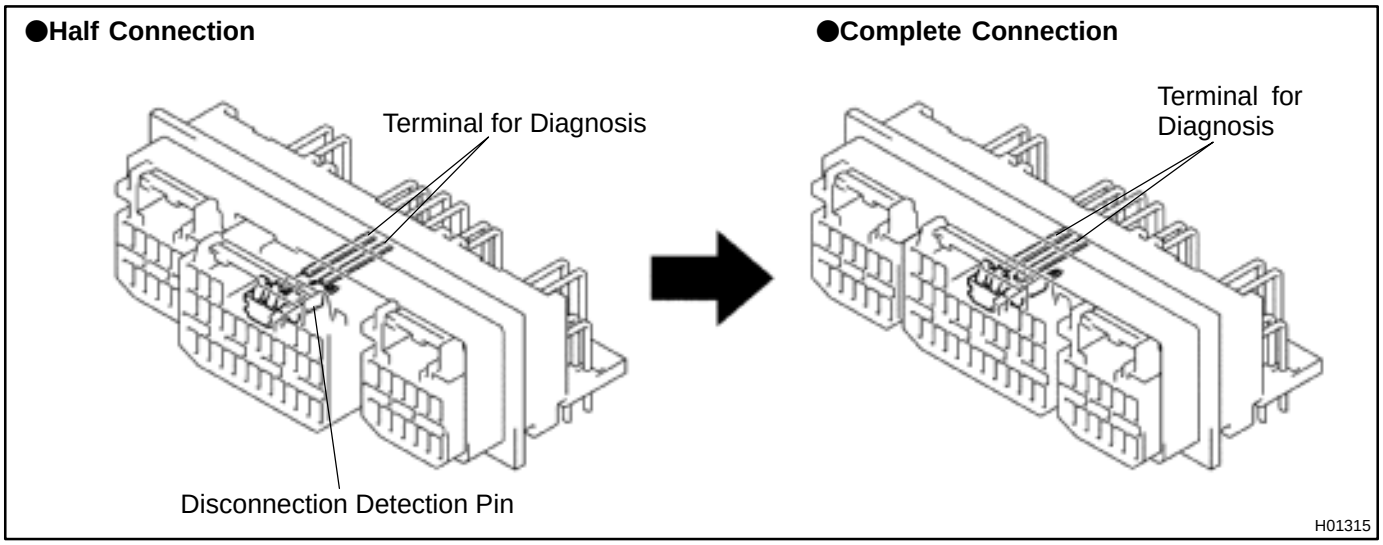

HINT:
The illustration shows connectors ”1”, ”2” and ”3” in step 11.

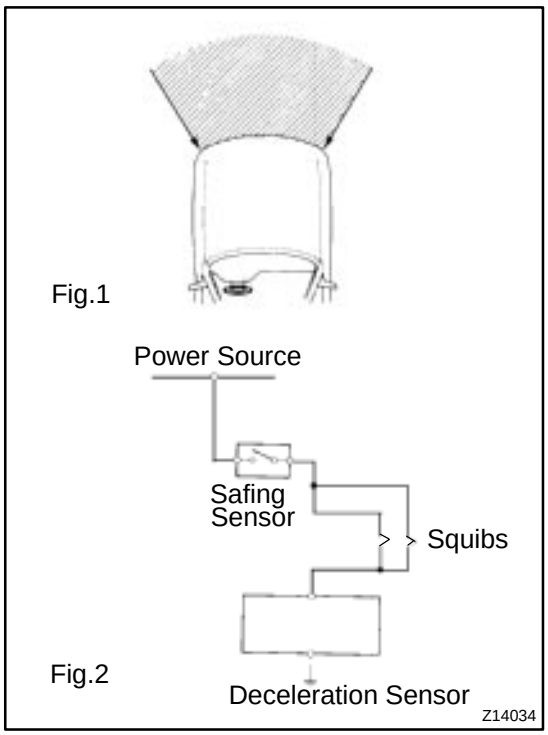

(b) When the vehicle is involved in a frontal collision in the hatched area (Fig. 1) and the shock is larger than the predetermined level, the SRS is activated automatically. A safing sensor is designed to go on at a smaller deceleration rate than the airbag sensor. As illustrated in Fig. 2, ignition is caused when current flows to the squib, which happens when a safing sensor and the deceleration sensor go on simultaneously. When a deceleration force acts on the sensors, 2 squibs in the driver airbag and front passenger airbag ignite and generate gas. The gas discharging into the driver airbag and front passenger airbag rapidly increases the pressure inside the bags, breaking open the steering wheel pad and instrument panel.
Bag inflation then ends, and the bags deflate as the gas is discharged through discharge holes at the bag's rear or side.

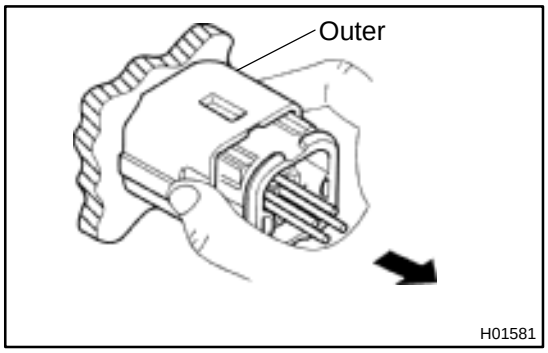

11. DISCONNECTION OF CONNECTORS FOR FRONT AIRBAG SENSOR AND SIDE AIRBAG SENSOR

(a) While holding both flank sides of the outer, slide the outer to the direction shown by an arrow.

(b) Lock of the connectors is released, then disconnect the connectors.

HINT:

Be sure to hold both flank sides of the outer. If holding the top and bottom sides, it will obstruct disconnection.

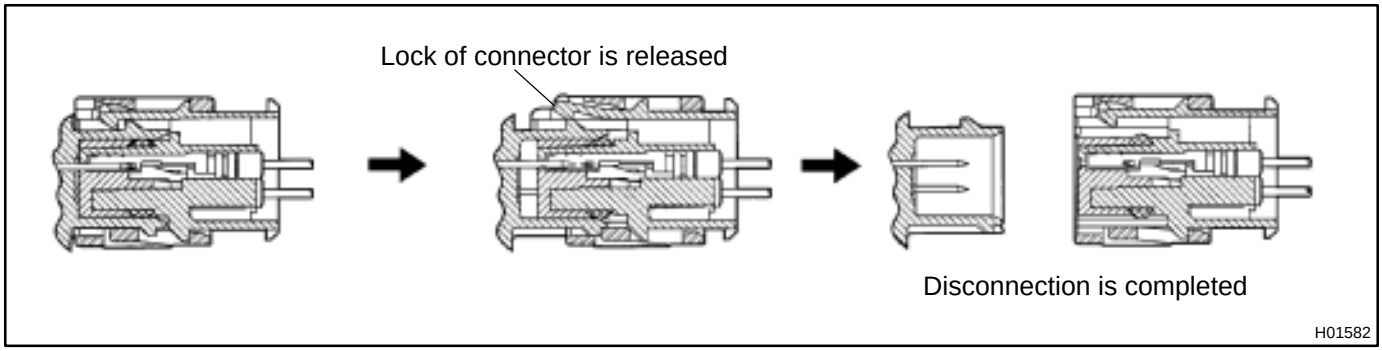

12. CONNECTION OF CONNECTORS FOR FRONT AIRBAG SENSOR AND SIDE AIRBAG SENSOR

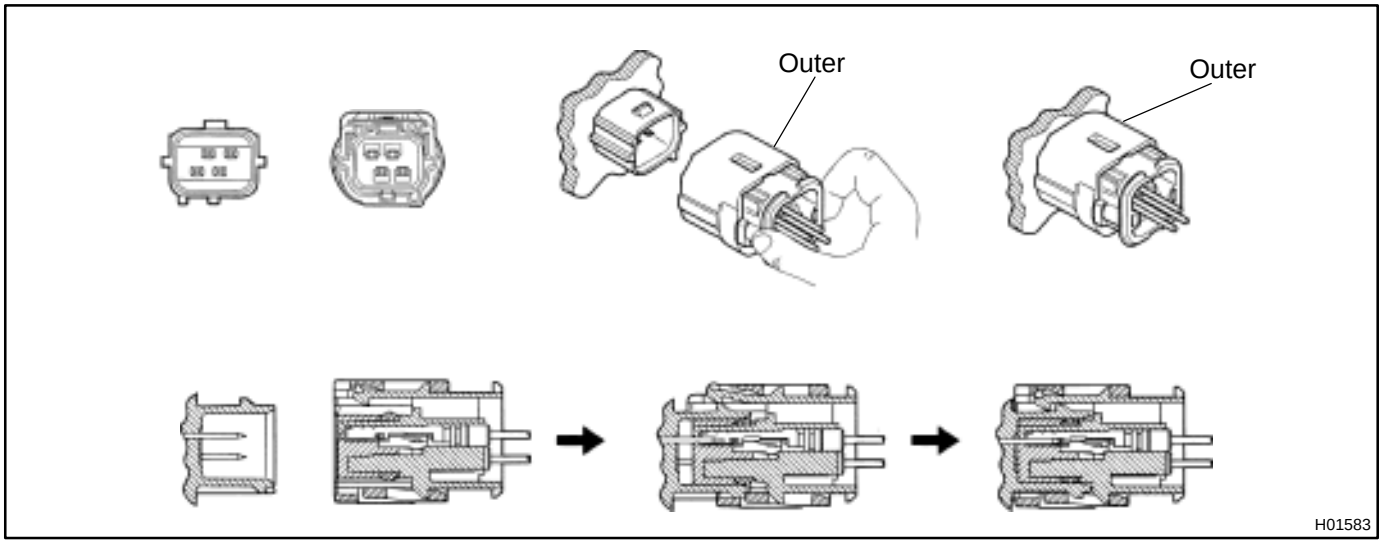

(a) Align the male connector (of the side of sensor) and female connector in the same direction as shown in the illustration and fit in them without rubbing.

(b) As they are fitted in, the outer slides rearward. Press it until the outer returns to its original position again.

If fitting stops half way, connectors will separate.

(c) Be sure to insert until they are locked. After fitting in, pull them slightly to check that they are locked. (When locked, make sure that the outer returns to its original position and sound at the time of fitting in can be heard.)

HINT:

- Do not fit in while holding the outer.
- When fitting in, the outer slides. Do not touch it.

13. DISCONNECTION OF SIDE AIRBAG CONNECTOR

(a) Place a finger on the slider.
(b) Slide the slider to release lock.
(c) Disconnect the connector.

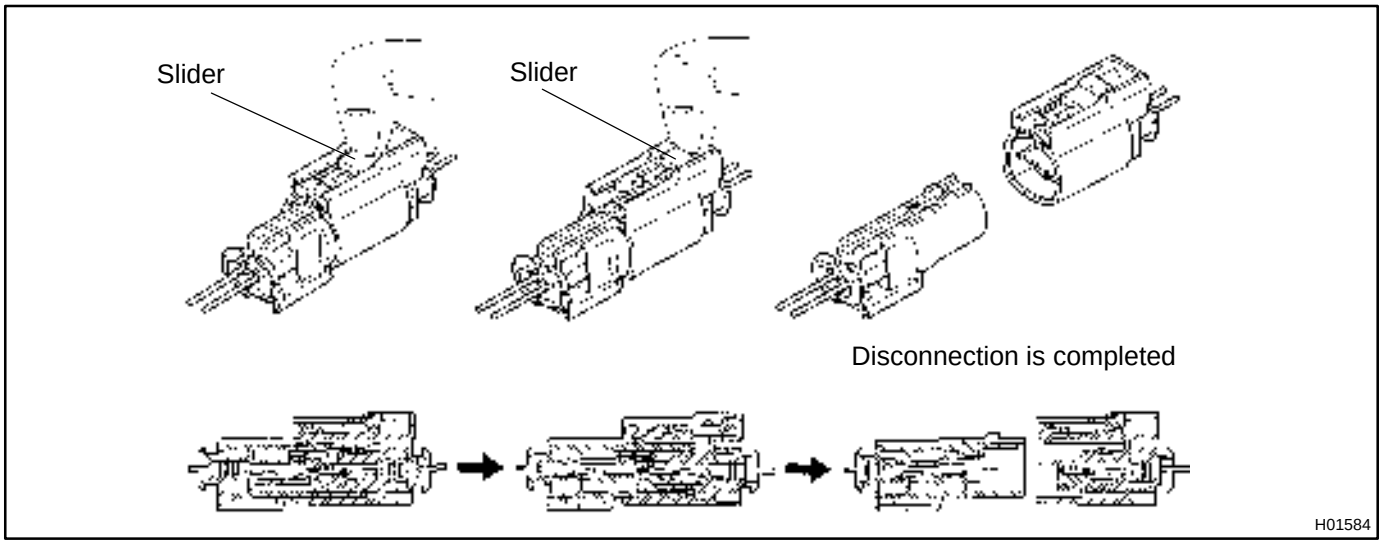

14. CONNECTION OF SIDE AIRBAG CONNECTOR

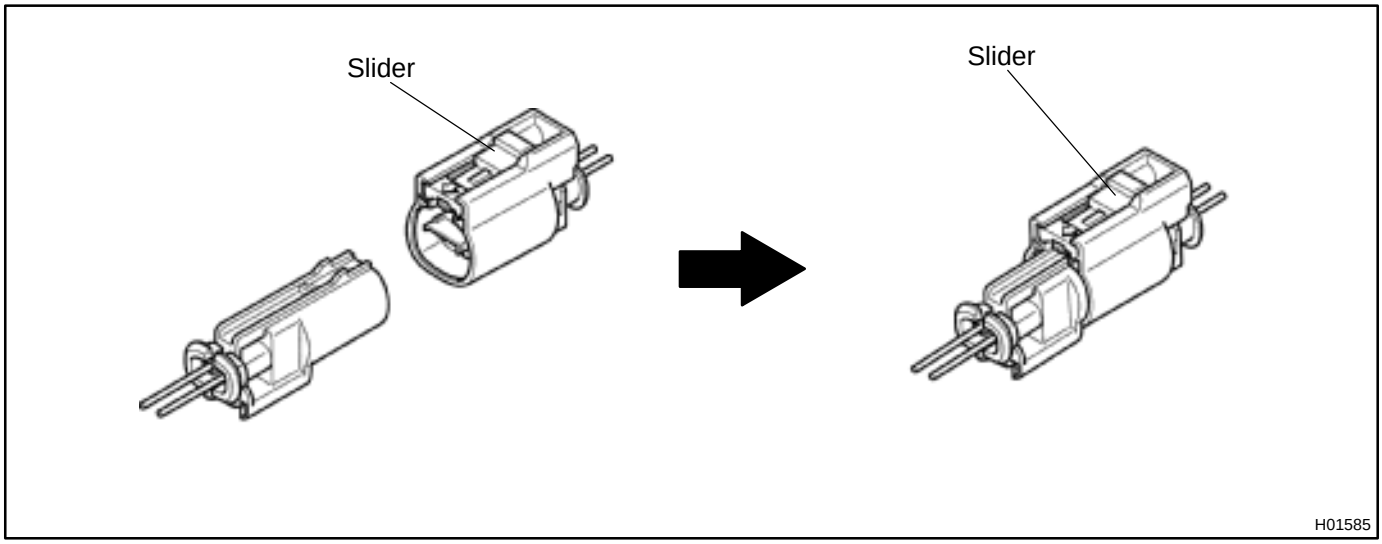

(a) Align a lock part of male connector and a slider of female connector in the same direction as shown in the illustration, fit in them without rubbing.
(b) Be sure to insert until they are locked. After fitting in pull them slightly to check that they are locked. (When locked, make sure that the outer returns to its original position and sound at the time of fitting in can be heard.)

HINT:

- As the slider slides, do not touch it.
- Be careful not to deform the release board. If the release board is deformed, replace it with a new one.

15. DISCONNECTION OF CONNECTORS FOR STEERING WHEEL PAD (with AIRBAG) AND FRONT PASSENGER AIRBAG ASSEMBLY

(a) Place a finger on the slider.
(b) Slide the slider to release lock.
(c) Disconnect the connector.

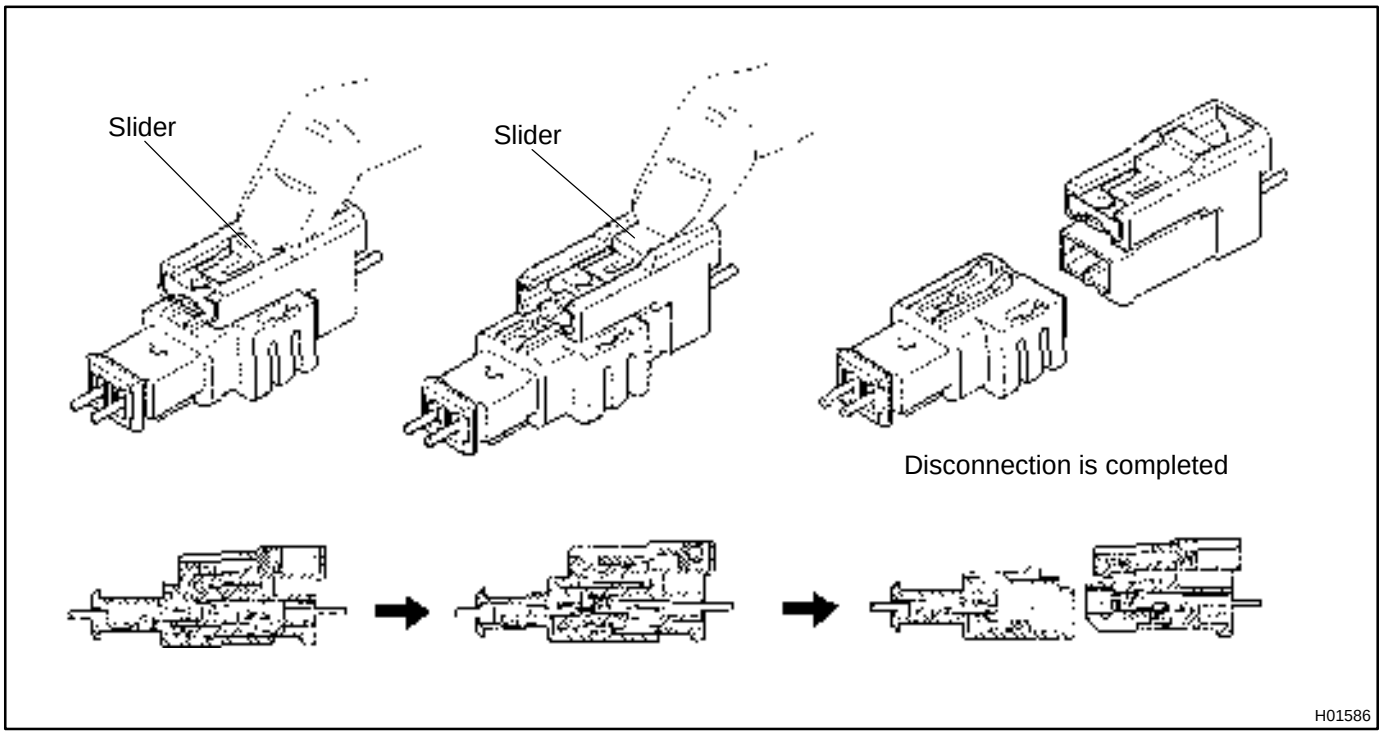

16. CONNECTION OF CONNECTORS FOR STEERING WHEEL PAD (with AIRBAG) AND FRONT PASSENGER AIRBAG ASSEMBLY

(a) Align a lock part of male connector and a slider of female connector in the same direction as shown in the illustration, fit in them without rubbing.

(b) Be sure to insert until they are locked. After fitting in pull them slightly to check that they are locked. (When locked, make sure that the outer returns to its original position and sound at the time of fitting in can be heard.)

HINT:

- As the slider slides, do not touch it.
- Be careful not to deform the release board. If the release board is deformed, replace it with a new one.

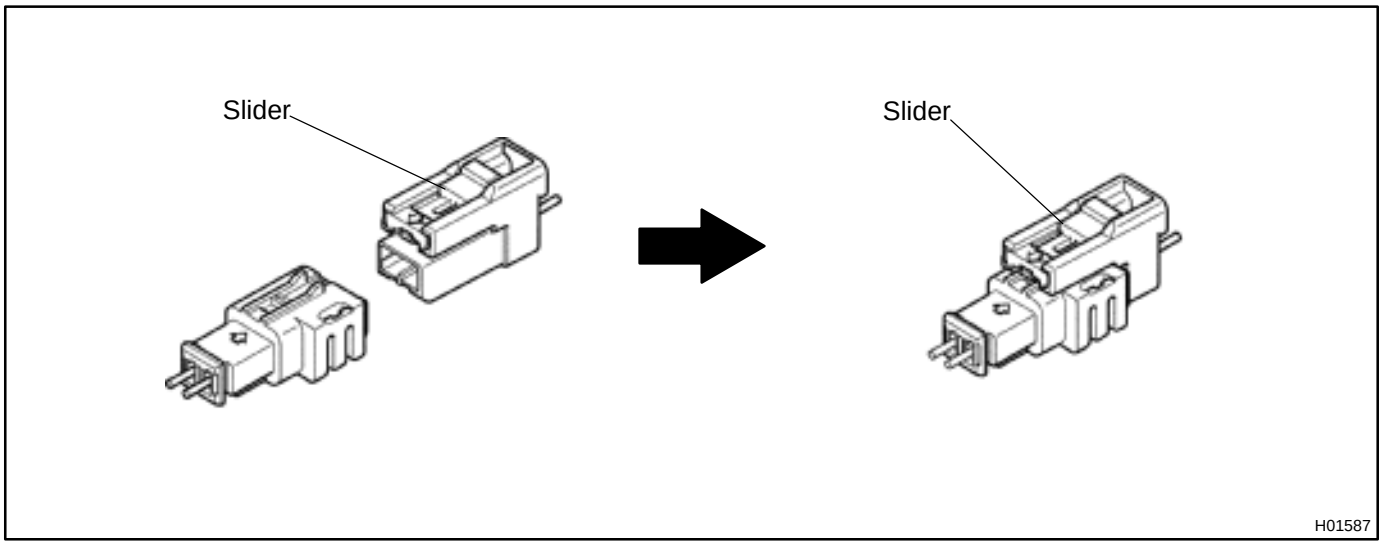

RS0JS–07

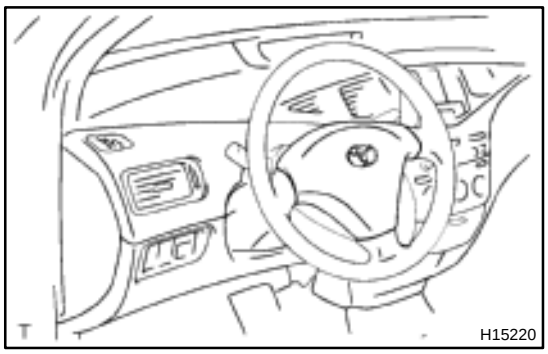

INSPECTION

1. Vehicle not involved in collision:

INSPECT SUPPLEMENTAL RESTRAINT SYSTEM

(a) Do a diagnostic system check (See page DI–497).

(b) Do a visual check which includes the following item with the steering wheel pad (with airbag) installed in the vehicle.

Check cuts, minute cracks or marked discoloration on the steering wheel pad top surface and in the grooved portion.

2. Vehicle involved in collision and airbag is not deployed:

INSPECT SUPPLEMENTAL RESTRAINT SYSTEM

(a) Do a diagnostic system check (See page DI–497).

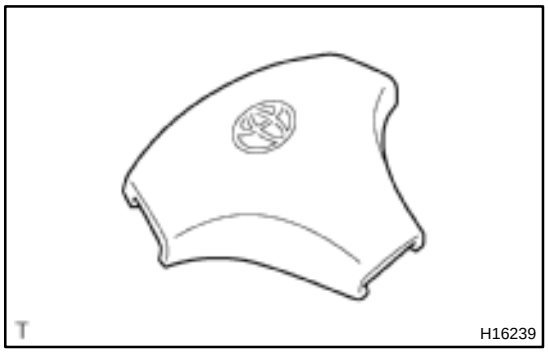

(b) Do a visual check which includes the following items with the steering wheel pad (with airbag) removed from the vehicle.

- Check cuts, minute cracks or marked discoloration on the steering wheel pad top surface and in the grooved portion.
- Check cuts and cracks in wire harness, and chipping in connectors.

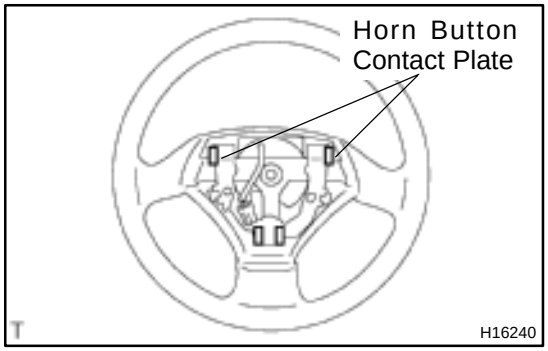

- Check the deformation of the horn button contact plate of the steering wheel.

CAUTION:

For removal and installation of the steering wheel pad, see page SR–6 and SR–14, be sure to follow the correct procedure.

HINT:

- If the horn button contact plate of the steering wheel is deformed, never repair it. Always replace the steering wheel assembly with a new one.
- There should be no interference between the steering wheel pad and steering wheel, and the clearance should be uniform all the way around when the new steering wheel pad is installed on the steering wheel.

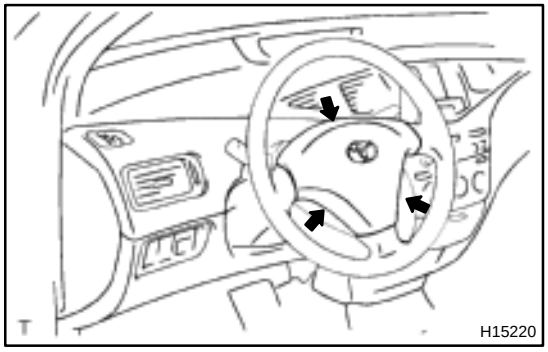

3. Vehicle involved in collision and airbag is deployed: INSPECT SUPPLEMENTAL RESTRAINT SYSTEM

(a) Do a diagnostic system check (See page DI–497).

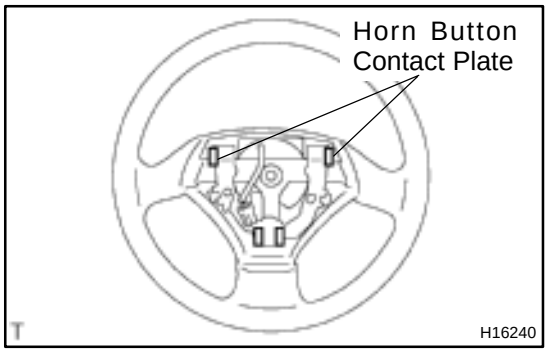

(b) Do a visual check which includes the following items with the steering wheel pad (with airbag) removed from the vehicle.

- Check the deformation on the horn button contact plate of the steering wheel.
- Check the damage on the spiral cable connector and wire harness.

CAUTION:

For removal and installation of the steering wheel pad, see page SR–6 and SR–14, and be sure to follow the correct procedure.

HINT:

- If the horn button contact plate of the steering wheel is deformed, never repair it. Always replace the steering wheel assembly with a new one.

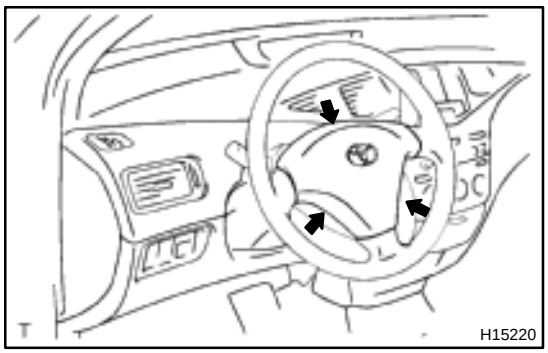

- There should be no interference between the steering wheel pad and steering wheel, and the clearance should be uniform all the way around when the new steering wheel pad is installed on the steering wheel.

RS0R3–02

DISPOSAL

HINT:

When scrapping vehicle equipped with an SRS or disposing of a steering wheel pad (with airbag), always first deploy the airbag in accordance with the procedure described below. If any abnormality occurs with the airbag deployment, contact the SERVICE DEPT. of TOYOTA MOTOR SALES, U.S.A., INC.

CAUTION:

- **Never dispose of a steering wheel pad which has an undeployed airbag.**
- **The airbag produces a sizeable exploding sound when it deploys, so perform the operation out–of–doors and where it will not create a nuisance to nearby residents.**



- **When deploying the airbag, always use the specified SST (SRS Airbag Deployment Tool). Perform the operation in a place away from electrical noise.**
  SST 09082–00700
- **When deploying an airbag, perform the operation at least 10 m (33 ft) away from the steering wheel pad.**
- **The steering wheel pad is very hot when the airbag is deployed, so leave it alone for at least 30 minutes after deployment.**
- **Use gloves and safety glasses when handling a steering wheel pad with the deployed airbag.**
- **Always wash your hands with water after completing the operation.**
- **Do not apply water, etc. to a steering wheel pad with the deployed airbag.**

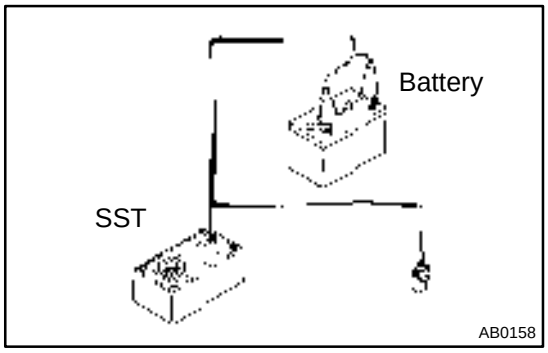

1. AIRBAG DEPLOYMENT WHEN SCRAPPING VEHICLE

HINT:

Have a battery ready as the power source to deploy the airbag.



(a) Check functioning of the SST.

CAUTION:

When deploying the airbag, always use the specified SST: SRS Airbag Deployment Tool.

SST 09082–00700

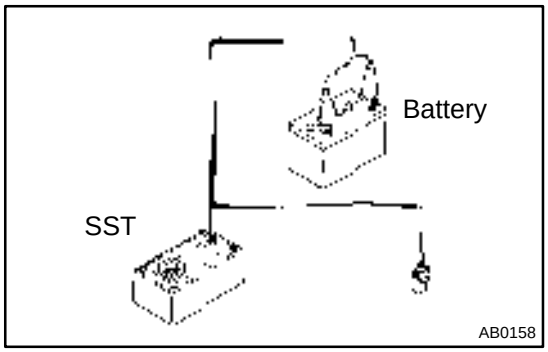

(1) Connect the red clip of the SST to the battery positive (+) terminal and the black clip to the battery negative (–) terminal.

HINT:

Do not connect the yellow connector which will be connected with the supplemental restraint system.

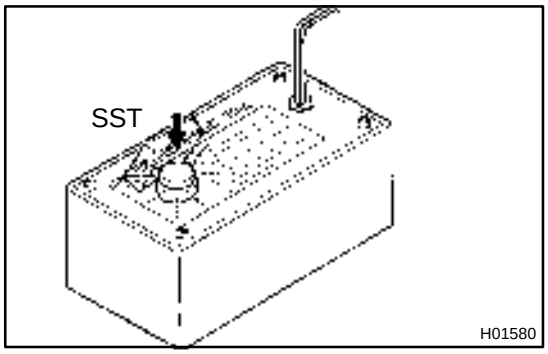

(2) Press the SST activation switch, and check that the LED of the SST activation switch lights up.

CAUTION:

If the LED lights up when the activation switch is not being pressed, SST malfunction is probable, so definitely do not use the SST.

(3) Disconnect the SST from the battery.

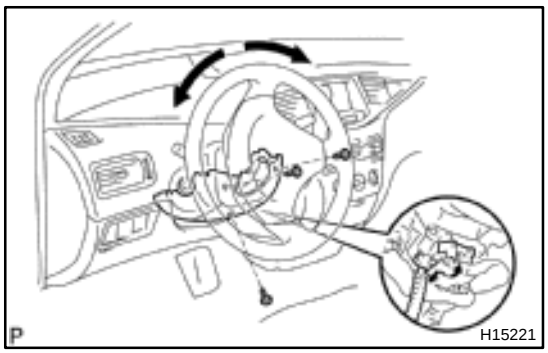

(b) Install the SST.

CAUTION:

Check that there is no looseness in the steering wheel and steering wheel pad.

(1) While turning the steering wheel right / left, remove the 3 screws and column lower cover.

(2) Disconnect the airbag connector of the spiral cable.

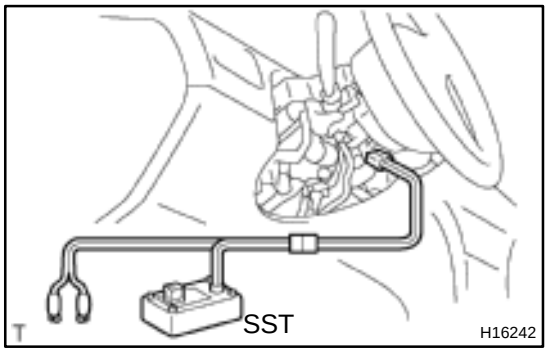

(3) Connect the connectors of the 2 SST to the airbag connector of the spiral cable.

SST 09082–00700, 09082–00760

NOTICE:

To avoid damaging the connector of the SST and wire harness, do not lock the secondary lock of the twin lock.

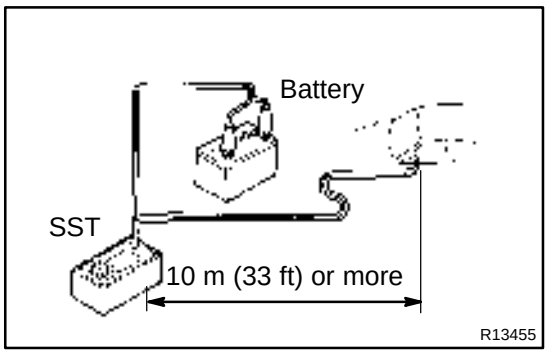

(4) Move the SST at least 10 m (33 ft) away from the front of the vehicle.
(5) Close all the doors and windows of the vehicle.

NOTICE:

Take care not to damage the SST wire harness.

(6) Connect the SST red clip to the battery positive (+) terminal and the black clip to the negative (–) terminal.

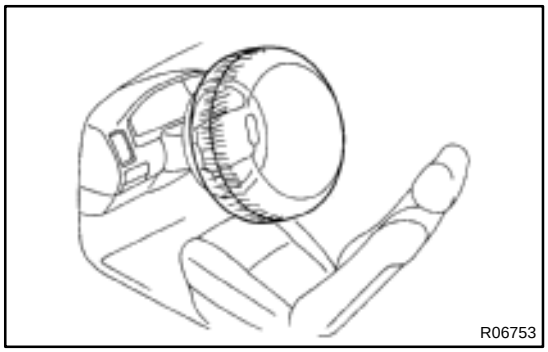

(c) Deploy the airbag.
(1) Check that no one is inside the vehicle or within 10 m (33 ft) area around the vehicle.
(2) Press the SST activation switch and deploy the airbag.

CAUTION:

- **The steering wheel pad is very hot when the airbag is deployed, so leave it alone for at least 30 minutes after deployment.**
- **Use gloves and safety glasses when handling a steering wheel pad with the deployed airbag.**
- **Always wash your hands with water after completing the operation.**
- **Do not apply water, etc. to a steering wheel pad with the deployed airbag.**
- **When scrapping a vehicle, deploy the airbag and scrap the vehicle with the steering wheel pad still installed.**
- **When moving a vehicle for scrapping which has a steering wheel pad with deployed airbag, use gloves and safety glasses.**

HINT:

The airbag deploys simultaneously as the LED of the SST activation switch lights up.

2. DEPLOYMENT WHEN DISPOSING OF STEERING WHEEL PAD ONLY

NOTICE:

- **When disposing of the steering wheel pad (with airbag) only, never use the customers vehicle to deploy the airbag.**
- **Be sure to follow the procedure given below when deploying the airbag.**

HINT:

Have a battery ready as the power source to deploy the airbag.

(a) Remove the steering wheel pad (See page SR–6).

CAUTION:

- **When removing the steering wheel pad, work must be started 90 seconds after the ignition switch is turned to the "LOCK" position and the negative (–) terminal cable is disconnected from the battery.**
- **When storing the steering wheel pad, keep the upper surface of the pad facing upward.**

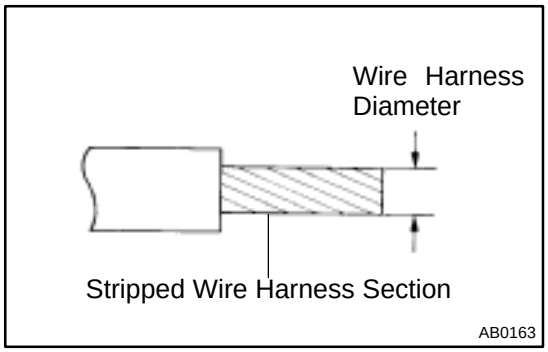

(b) Using a service–purpose wire harness tie down the steering wheel pad to the disc wheel.

Wire harness: Stripped wire harness section 1.25 mm^2 or more (0.0019 in^2. or more)

CAUTION:

If a wire harness which is too thin or some other thing is used to tie down the steering wheel pad, it may be snapped by the shock when the airbag is deployed. This is highly dangerous. Always use a wire harness for vehicle use which is at least 1.25 mm^2 (0.0019 in^2.).

HINT:

To calculate the square of the stripped wire harness section:

Square = 3.14 x (Diameter)^2 divided by 4

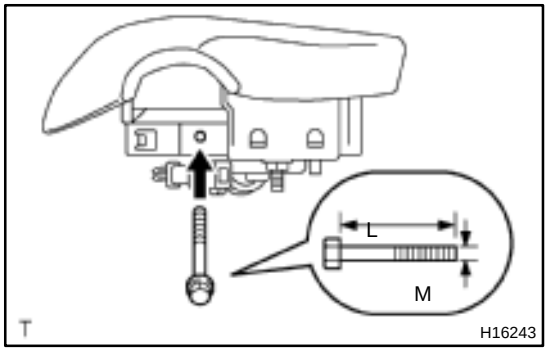

(1) Install the 2 bolts with washers in the 2 bolt holes in the steering wheel pad.

Bolt:

L: 35. mm (1.387 in.)

M: 6.0 mm (0.236 in.)

Pitch: 1.0 mm (0.039 in.)

NOTICE:

- **Tighten the bolts by hand until the bolts become difficult to turn.**
- **Do not tighten the bolts too much.**

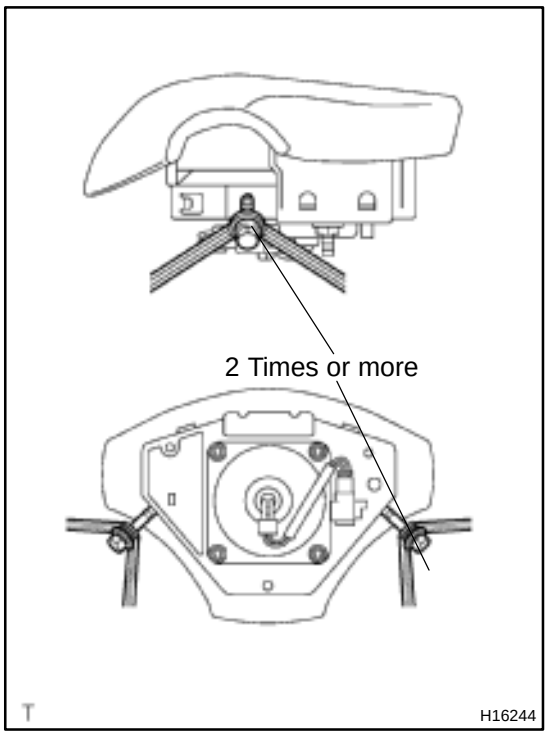

(2) Using 3 wire harness, wind the wire harness at least 2 times each around the bolts installed on the left and right sides of the steering wheel pad.

CAUTION:

- **Tightly wind the wire harness around the bolts so that there is no slack.**
- **If there is slackness in the wire harness, the steering wheel pad may come loose due to the shock when the airbag is deployed. This is highly dangerous.**

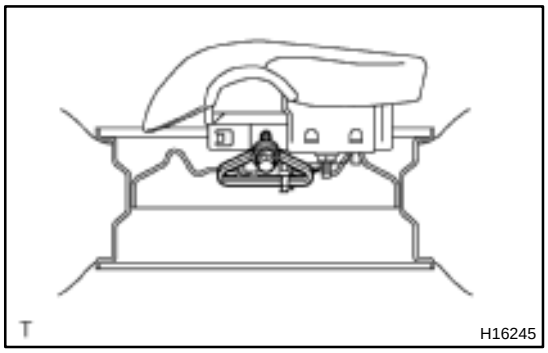

(3) Face the upper surface of the steering wheel pad upward. Separately tie the left and right sides of the steering wheel pad to the disc wheel through the hub nut holes. Position the steering wheel pad connector so that it hangs downward through a hub hole in the disc wheel.

CAUTION:

- **Make sure that the wire harness is tight. It is very dangerous when looseness in the wire harness results in the steering wheel pad coming free due to the shock from the airbag deploying.**
- **Always tie down the steering wheel pad with the pad side facing upward. It is very dangerous if the steering wheel pad is tied down with the metal surface facing upward as the wire harness will be cut by the shock from the airbag deploying and the steering wheel pad will be thrown into the air.**

NOTICE:

The disc wheel will be marked by airbag deployment, so when disposing of the airbag use a redundant disc wheel.

(c) Check functioning of the SST (See step 1–(a)).
SST 09082–00700

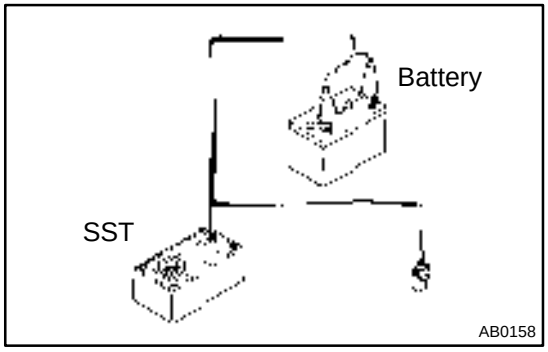

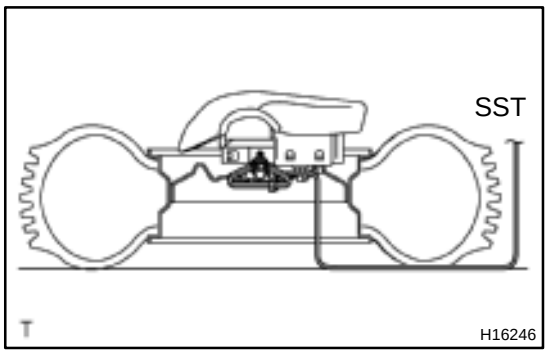

(d) Install the SST.

CAUTION:

Place the disc wheel on the level ground.

(1) Connect the connectors of the 2 SST to the steering wheel pad connector.

SST 09082–00700, 09082–00760

NOTICE:

To avoid damaging the SST connector and wire harness, do not lock the secondary lock of the twin lock. Also, secure some slack for the SST wire harness inside the disc wheel.

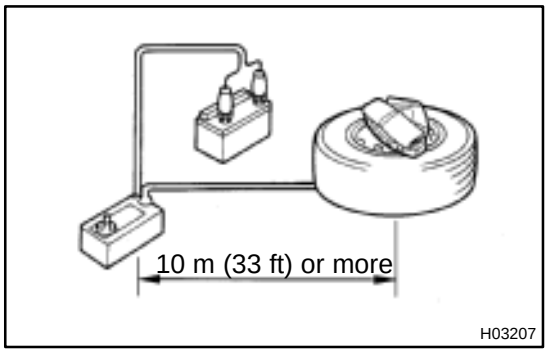

(2) Move the SST to at least 10 m (33 ft) away from the steering wheel pad tied down on the disc wheel.

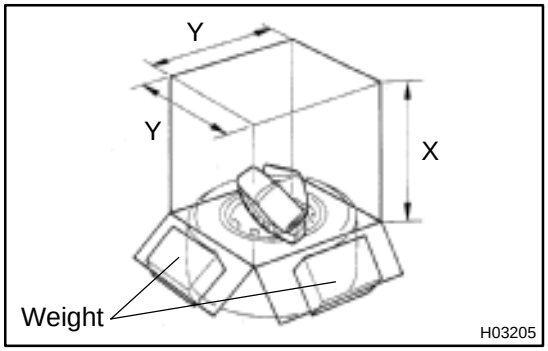

(e) Cover the steering wheel pad with a cardboard box or tires.

- Covering method using a cardboard box:
  Cover the steering wheel pad with the cardboard box and weight the cardboard box down in 4 places with at least 190 N (20 kg, 44 lb).

Size of cardboard box:

Must exceed the following dimensions:

X = 460 mm (18.11 in.)

Y = 650 mm (25.59 in.)

NOTICE:

- **When dimension Y of the cardboard box exceeds the diameter of the disc wheel with tire to which the steering wheel pad is tied, X should be the following size.**
  X = 460 mm (18.11 in.) + width of tire
- **If a cardboard box smaller than the specified size is used, the cardboard box will be broken by the shock from the airbag deployment.**

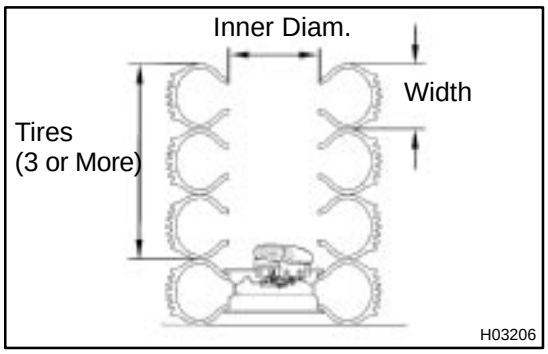

- Covering method using tires:
  Place at least 3 tires without disc wheel on top of the disc wheel with tire to which the steering wheel pad is tied.

Tire size: Must exceed the following dimensions–
Width: 185 mm (7.87 in.)
Inner diameter: 360 mm (14.17 in.)

CAUTION:
Do not use tires with disc wheels.

NOTICE:
The tires may be marked by the airbag deployment, so use the redundant tires.

(f) Deploy the airbag.
  (1) Connect the SST red clip to the battery positive (+) terminal and the black clip to the battery negative (–) terminal.

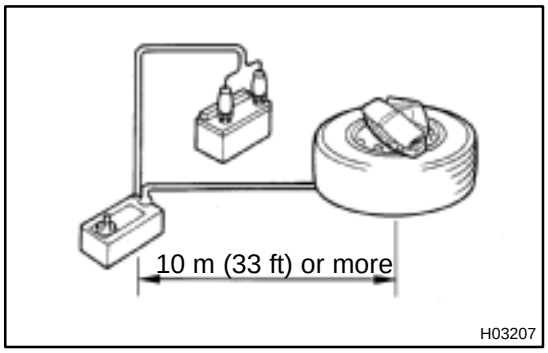

  (2) Check that no one is within 10 m (33 ft) area around the disc wheel which the steering wheel pad is tied to.
  (3) Press the SST activation switch and deploy the airbag.

HINT:
The airbag deploys simultaneously as the LED of the SST activation switch lights up.



(g) Dispose of the steering wheel pad (with airbag).

CAUTION:
- **The steering wheel pad is very hot when the airbag is deployed, so leave it alone for at least 30 minutes after deployment.**
- **Use gloves and safety glasses when handling a steering wheel pad with the deployed airbag.**
- **Always wash your hands with water after completing the operation.**
- **Do not apply water, etc. to a steering wheel pad with the deployed airbag.**
  (1) Remove the steering wheel pad from the disc wheel.
  (2) Place the steering wheel pad in a vinyl bag, tie the end tightly and dispose of it in the same way as other general parts disposal.



3. DEPLOYMENT WHEN DISPOSING OF STEERING WHEEL PAD WITH AIRBAG DEPLOYED IN COLLISION

Dispose of the steering wheel pad (with airbag).

CAUTION:

- **The steering wheel pad is very hot when the airbag is deployed, so leave it alone for at least 30 minutes after deployment.**
- **When moving a vehicle for scrapping which has a steering wheel pad with the deployed airbag, use gloves and safety glasses.**
- **Use gloves and safety glasses when handling a steering wheel pad with deployed airbag.**
- **Always wash your hands with water after completing the operation.**
- **Do not apply water, etc. to a steering wheel pad with deployed airbag.**

(1) Remove the steering wheel pad from the steering wheel (See page SR–6).

(2) Place the steering wheel pad in a vinyl bag, tie the end tightly and dispose of it in the same way as other general parts disposal.

RS0R5–01

INSPECTION

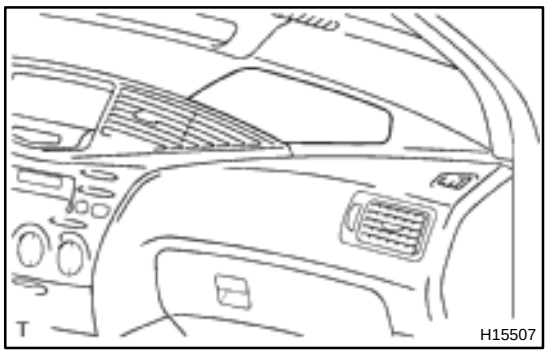

1. Vehicles not involved in collision:
INSPECT SUPPLEMENTAL RESTRAINT SYSTEM

(a) Do a diagnostic system check (See page DI–497).

(b) Do a visual check which includes the following item with the front passenger airbag assembly installed in the vehicle.
Check cuts, minute cracks or marked discoloration on the front passenger airbag assembly and instrument panel.

2. Vehicle involved in a collision and airbag is not deployed:
INSPECT SUPPLEMENTAL RESTRAINT SYSTEM

(a) Do a diagnostic system check (See page DI–497).

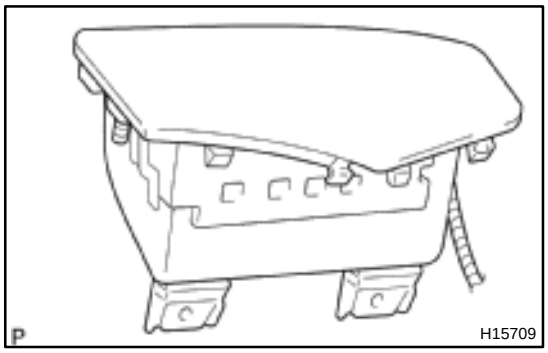

(b) Do a visual check which includes the following items with the front passenger airbag assembly removed from the vehicle.
- Check cuts, minute cracks or marked discoloration on the front passenger airbag assembly.
- Check cuts and cracks in wire harness, and for chipping in connectors.
- Check the deformation or cracks on the instrument panel and instrument panel reinforcement.

CAUTION:
For removal and installation of the front passenger airbag assembly, see page RS–27 and RS–38, and be sure to follow the correct procedure.

HINT:
If the instrument panel or instrument panel reinforcement is deformed or cracked, never repair it. Always replace it with a new one.

3. Vehicle involved in a collision and airbag is deployed:
INSPECT SUPPLEMENTAL RESTRAINT SYSTEM

(a) Do a diagnostic system check (See page DI–497).

(b) Do a visual check which includes the following items with the front passenger airbag assembly removed from the vehicle.
- Check the deformation or cracks on the instrument panel and instrument panel reinforcement.
- Check the damage on the connector and wire harness.

CAUTION:
For removal and installation of the front passenger airbag assembly, see page SR–6 and SR–14, and be sure to follow the correct procedure.

HINT:
If the instrument panel or instrument panel reinforcement is deformed or cracked, never repair it. Always replace it with a new one.

RS0JZ–06

DISPOSAL

HINT:

When scrapping vehicle equipped with an SRS or disposing of a front passenger airbag assembly, always first deploy the airbag in accordance with the procedure described below. If any abnormality occurs with the airbag deployment, contact the SERVICE DEPT. of TOYOTA MOTOR SALES, U.S.A., INC.

CAUTION:

- **Never dispose of a front passenger airbag assembly which has an undeployed airbag.**
- **The airbag produces a sizeable exploding sound when it deploys, so perform the operation out–of–doors and where it will not create a nuisance to nearby residents.**



- **When deploying the airbag, always use the specified SST (SRS Airbag Deployment Tool). Perform the operation in a place away from electrical noise.**
  SST 09082–00700
- **When deploying an airbag, perform the operation at least 10 m (33 ft) away from the front passenger airbag assembly.**
- **The front passenger airbag assembly is very hot when the airbag is deployed, so leave it alone for at least 30 minutes after deployment.**
- **Use gloves and safety glasses when handling a front passenger airbag assembly with the deployed airbag.**
- **Always wash your hands with water after completing the operation.**
- **Do not apply water, etc. to a front passenger airbag assembly with the deployed airbag.**

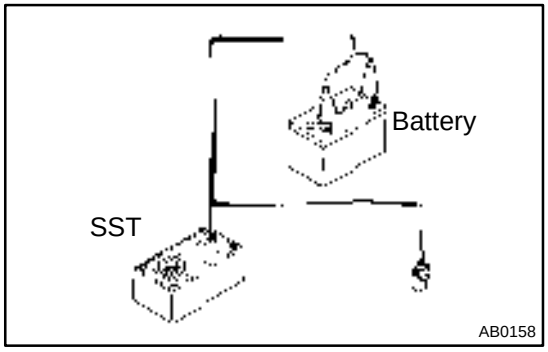

1. AIRBAG DEPLOYMENT WHEN SCRAPPING VEHICLE

HINT:

Have a battery ready as the power source to deploy the airbag.

(a) Check functioning of the SST (See step 1–(a) on page RS–16).
SST 09082–00700

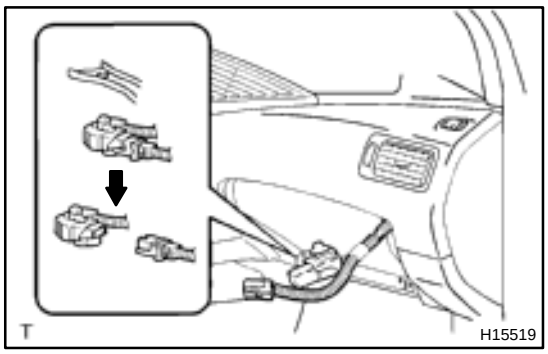

(b) Disconnect the airbag connector.

(1) Using a screwdriver, pry out the glove compartment door finish plate inside the lower panel.

HINT:

Tape the screwdriver tip before use.

(2) Remove the connector from the glove compartment door finish plate.

NOTICE:

When handling the airbag connector, take care not to damage the airbag wire harness.

(3) Disconnect the airbag connector.

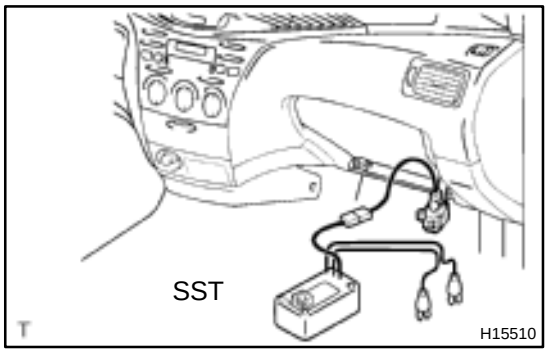

(c) Install the SST.

(1) Connect the connectors of the 2 SST to the front passenger airbag assembly connector.

SST 09082–00700, 09082–00760

NOTICE:

To avoid damaging the SST connector and wire harness, do not lock the secondary lock of the twin lock.

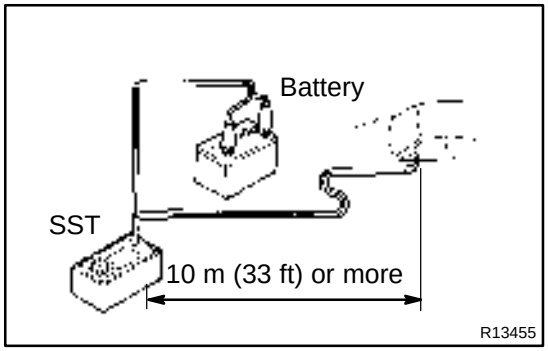

(2) Move the SST to at least 10 m (33 ft) away from the front of the vehicle.

(3) Close all the doors and windows of the vehicle.

NOTICE:

Take care not to damage the SST wire harness.

(4) Connect the SST red clip to the battery positive (+) terminal and the black clip to the negative (–) terminal.

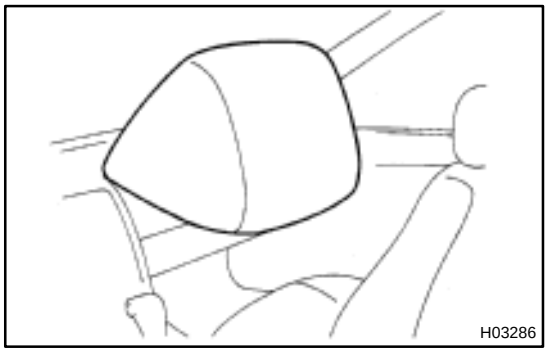

(d) Deploy the airbag.

(1) Check that no one is inside the vehicle or within 10 m (33 ft) area around the vehicle.

(2) Press the SST activation switch and deploy the airbag.

CAUTION:

- **The front passenger airbag assembly is very hot when the airbag is deployed, so leave it alone for at least 30 minutes after deployment.**
- **Use gloves and safety glasses when handling the front passenger airbag assembly with the deployed airbag.**
- **Always wash your hands with water after completing the operation.**
- **Do not apply water, etc. to the front passenger airbag assembly with the deployed airbag.**
- **When scrapping a vehicle, deploy the airbag and scrap the vehicle with the front passenger airbag assembly still installed.**
- **When moving a vehicle for scrapping which has the front passenger airbag assembly with the deployed airbag, use gloves and safety glasses.**

HINT:

The airbag deploys simultaneously as the LED of the SST activation switch lights up.

2. DEPLOYMENT WHEN DISPOSING OF FRONT PASSENGER AIRBAG ASSEMBLY ONLY

NOTICE:

- **When disposing of the front passenger airbag assembly only, never use the customer's vehicle to deploy the airbag.**
- **Be sure to follow the procedure given below when deploying the airbag.**

HINT:

Have a battery ready as the power source to deploy the airbag.

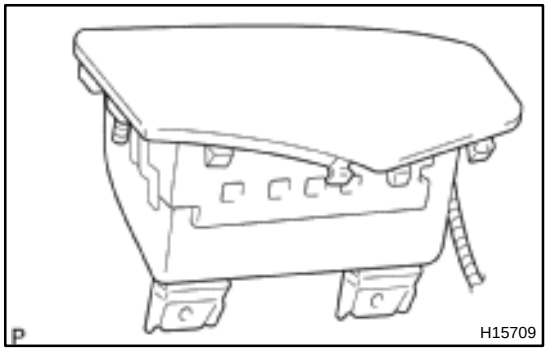

(a) Remove the front passenger airbag assembly (See page RS–27).

CAUTION:

- **When removing the front passenger airbag assembly, work must be started 90 seconds after the ignition switch is turned to the "LOCK" position and the negative (–) terminal cable is disconnected from the battery.**
- **When storing the front passenger airbag assembly, keep the upper surface of the airbag deployment side facing upward.**

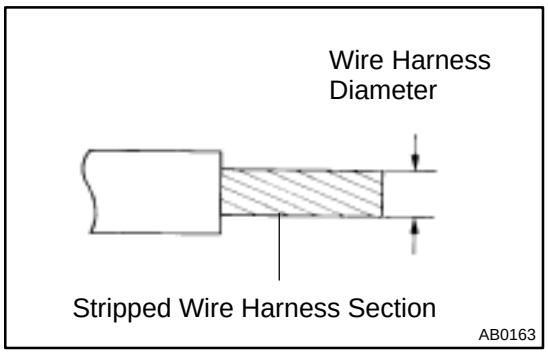

(b) Using a service–purpose wire harness, tie down the front passenger airbag assembly to the tire.

Wire harness: Stripped wire harness section 1.25 mm^2 or more (0.0019 $in.^2$ or more)

CAUTION:

If the front passenger airbag assembly is tied down with too thin wire harness, it may snap. This is highly dangerous. Always use a wire harness which is at least 1.25 mm^2 (0.0019 in^2.).

HINT:

To calculate the square of the stripped wire harness section:

Square = 3.14 X (Diameter)^2 divided by 4

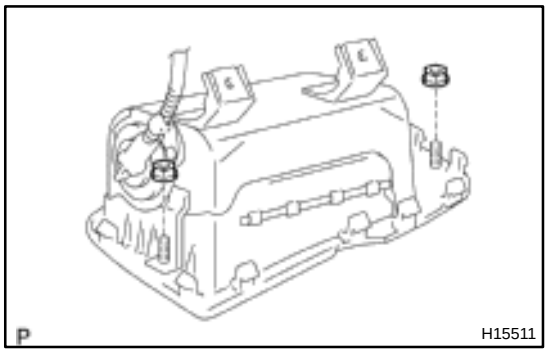

(1) Install the 2 nuts on the front passenger airbag assembly.

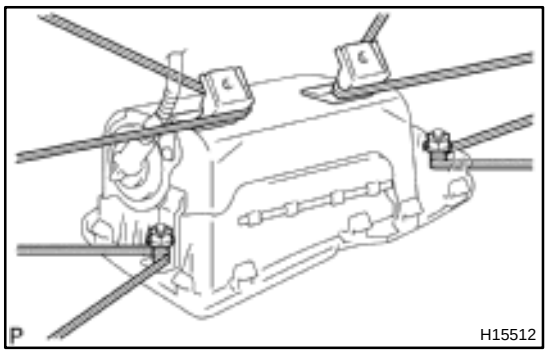

(2) Wind the wire harness around the bolts, and pass the wire harness though the installation holes.

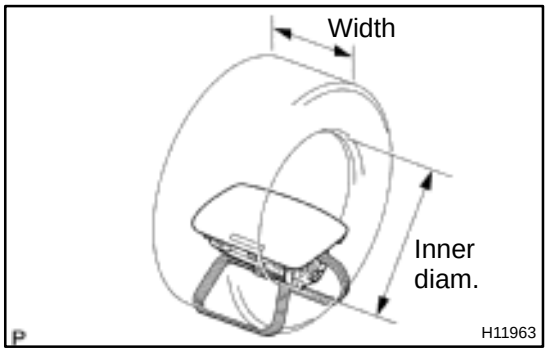

(3) Position the front passenger airbag assembly inside the tire with the airbag deployment side facing inside.

Tire size: Must exceed the following dimensions–
Width: 185 mm (7.28 in.)
Inner diameter: 360 mm (14.17 in.)

CAUTION:

- **Make sure that the wire harness is tight. It is very dangerous if looseness in the wire harness results in the front passenger airbag assembly coming free due to the shock from the airbag deploying.**
- **Always tie down the front passenger airbag assembly with the airbag deployment side facing inside.**

NOTICE:

The tire will be marked by the airbag deployment, so when disposing of the airbag use a redundant tire.

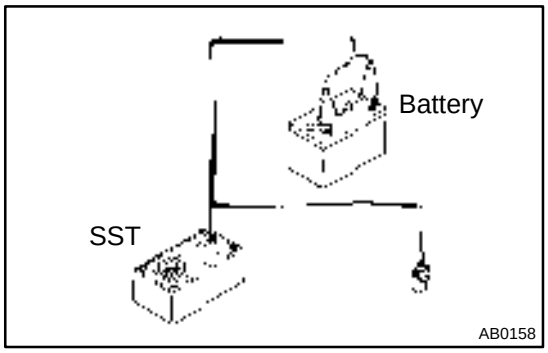

(c) Check functioning of the SST (See step 1–(a) on page RS–16).
SST 09082–00700

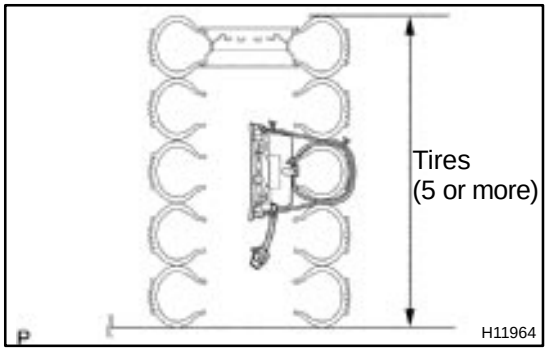

(d) Place the tires.
(1) Place at least 2 tires under the tire to which the front passenger airbag assembly is tied.
(2) Place at least 2 tires over the tire to which the front passenger airbag assembly is tied. The top tire should have the wheel installed.

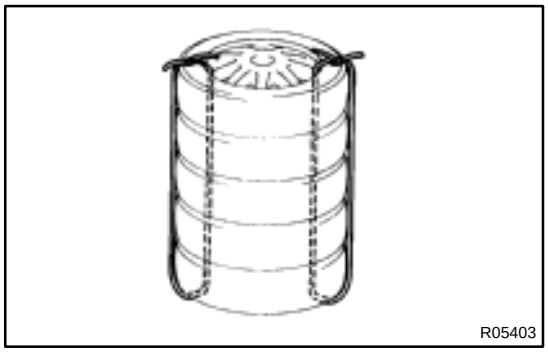

(3) Tie the tires together with 2 wire harness.

CAUTION:

Make sure that the wire harness is tight. It is very dangerous if loose wire harnesses result in the tires coming free due to the shock from the airbag deploying.

HINT:

Place the SST connector and wire harness inside tires. Provide at least 1 m (3 ft) of slack for the wire harness.

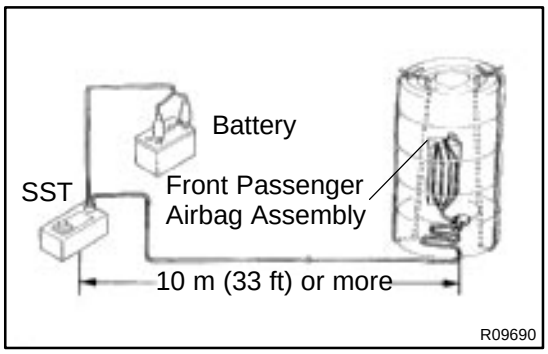

(e) Install the SST.
Connect the connectors of the 2 SST to the front passenger airbag assembly connector.
SST 09082–00700, 09082–00760

NOTICE:

To avoid damaging the SST connector and wire harness, do not lock the secondary lock of the twin lock. Also, secure some slack for the SST wire harness inside the tires.

(f) Deploy the airbag.
(1) Connect the SST red clip to the battery positive (+) terminal and the black clip to the battery negative (–) terminal.
(2) Check that no one is within 10 m (33 ft) area around the tire which the front passenger airbag assembly is tied to.
(3) Press the SST activation switch and deploy the airbag.

HINT:

The airbag deploys simultaneously as the LED of the SST activation switch lights up.



(g) Dispose of the front passenger airbag assembly.

CAUTION:

- **The front passenger airbag assembly is very hot when the airbag is deployed, so leave it alone for at least 30 minutes after deployment.**
- **Use gloves and safety glasses when handling a front passenger airbag assembly with the deployed airbag.**
- **Always wash your hands with water after completing the operation.**
- **Do not apply water, etc. to a front passenger airbag assembly with the deployed airbag.**

(1) Remove the front passenger airbag assembly from the tire.
(2) Place the front passenger airbag assembly in a vinyl bag, tie the end tightly and dispose of it in the same way as other general parts disposal.



3. DEPLOYMENT WHEN DISPOSING OF FRONT PASSENGER AIRBAG ASSEMBLY WITH AIRBAG DEPLOYED IN COLLISION

Dispose of the front passenger airbag assembly.

CAUTION:

- **The front passenger airbag assembly is very hot when the airbag is deployed, so leave it alone for at least 30 minutes after deployment.**
- **Use gloves and safety glasses when handling a front passenger airbag assembly with the deployed airbag.**
- **Always wash your hands with water after completing the operation.**
- **Do not apply water, etc. to a front passenger airbag assembly with the deployed airbag.**

(1) Remove the front passenger airbag assembly from the instrument panel (See page RS–27).

(2) Place the front passenger airbag assembly in a vinyl bag, tie the end tightly and dispose of it in the same way so as other general parts disposal.

RS0RA–01

DISPOSAL

HINT:

When scrapping vehicles equipped with an SRS or disposing of the side airbag assembly always first deploy the airbag in accordance with the procedure described below. If any abnormality occurs with the airbag deployment, contact the SERVICE DEPT. of TOYOTA MOTOR SALES, U.S.A., INC.

CAUTION:

- **Never dispose of a side airbag assembly which has an undeployed airbag.**
- **The airbag produces a sizeable exploding sound when it deploys, so perform the operation out–of–doors and where it will not create a nuisance to nearby residents.**



- **When deploying the airbag, always use the specified SST (SRS Airbag Deployment Tool), perform the operation in a place away from electrical noise.**
  SST 09082–00700
- **When deploying an airbag, perform the operation at least 10 m (33 ft) away from the airbag assembly.**
- **The side airbag assembly is very hot when the airbag is deployed, so leave it alone for at least 30 minutes after deployment.**
- **Use gloves and safety glasses when handling side airbag assembly with the deployed airbag.**
- **Always wash your hands with water after completing the operation.**
- **Do not apply water, etc. to a side airbag assembly with the deployed airbag.**

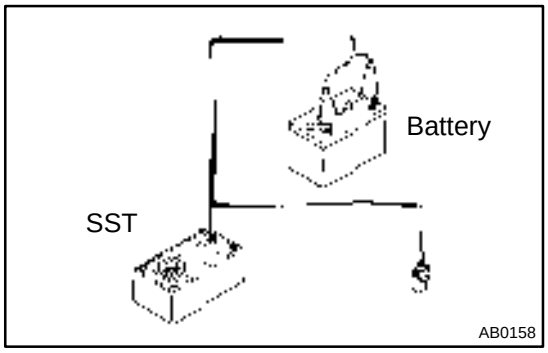

1. AIRBAG DEPLOYMENT WHEN SCRAPPING VEHICLE

HINT:

Have a battery ready as the power source to deploy the airbag.

(a) Check functioning of the SST (See step 1–(a) on page RS–16).
SST 09082–00700



(b) Disconnect the side airbag connector.

NOTICE:

When handling the airbag connector, take care not to damage the airbag wire harness.

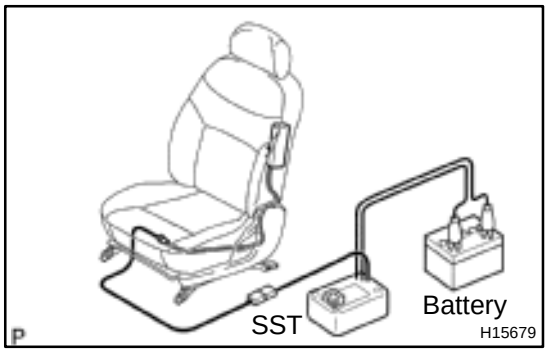

(c) Install the SST.

(1) Connect the connectors of the 2 SST to the airbag connector.

SST 09082–00700, 09082–00750

NOTICE:

To avoid damaging the SST connector and wire harness, do not lock the secondary lock of the twin lock.

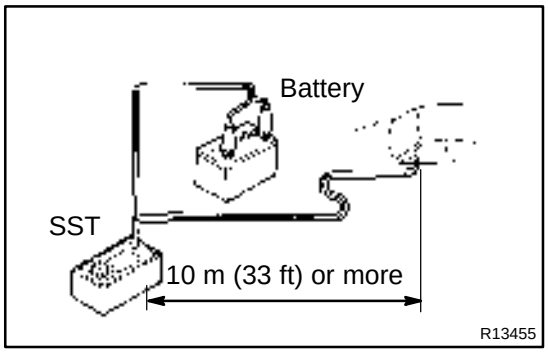

(2) Move the SST at least 10 m (33 ft) away from the front of the vehicle.

(3) Close all the doors and windows of the vehicle.

NOTICE:

Take care not to damage the SST wire harness.

(4) Connect the SST red clip to the battery positive (+) terminal and the black clip to the battery negative (–) terminal.



(d) Deploy the airbag.

(1) Check that no one is inside the vehicle or within 10 m (33 ft) area around the vehicle.

(2) Press the SST activation switch and deploy the airbag.

CAUTION:

- **The side airbag assembly is very hot when the airbag is deployed, so leave it alone for at least 30 minutes after deployment.**
- **Use gloves and safety glasses when handling the side airbag assembly with the deployed airbag.**
- **Do not apply water, etc. to the side airbag assembly with the deployed airbag.**
- **Always wash your hands with water after completing the operation.**
- **When scrapping a vehicle, deploy the airbag and scrap the vehicle with the side airbag assembly still installed.**

HINT:
The airbag deploys simultaneously as the LED of SST activation switch lights up.

2. DEPLOYMENT WHEN DISPOSING OF SIDE AIRBAG ASSEMBLY

NOTICE:

- **When disposing of the side airbag assembly only, never use the customer's vehicle to deploy the airbag.**
- **Be sure to follow the procedure given below when deploying the airbag.**

HINT:
Have a battery ready as the power source to deploy the airbag.

(a) Remove the seatback assembly (See page RS–40).

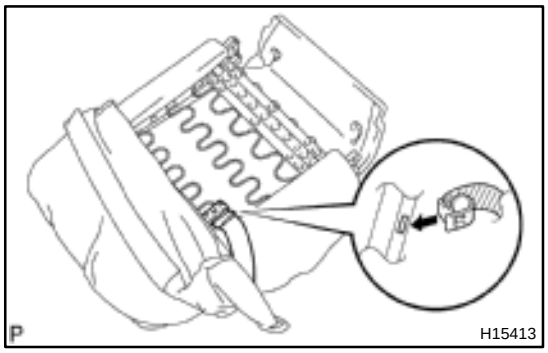

(b) Disengage the hook of the seatback cover as shown in the illustartion.

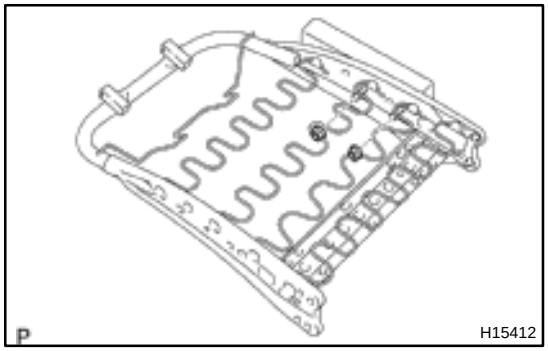

(c) Remove the 2 nuts and side airbag assembly from the seatback assembly.

CAUTION:
When storing the side airbag assembly, keep the upper surface of the airbag deployment side facing upward.

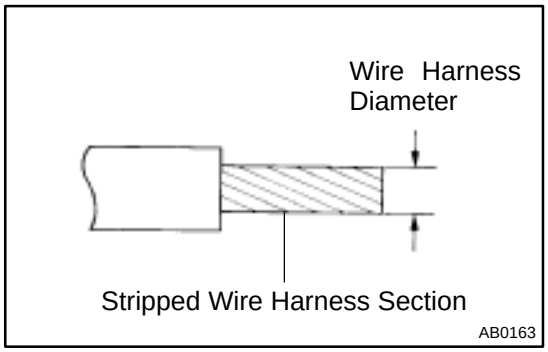

(d) Using a service–purpose wire harness, tie down the side airbag assembly to the tire.
Wire harness: Stripped wire harness section 1.25 mm^2 or more (0.0019 in^2. or more)

CAUTION:
If a wire harness which is too thin or some other thing is used to tie down the side airbag assembly, it may be snapped by the shock when the airbag is deployed. This is highly dangerous. Always use a wire harness for vehicle use which is at least 1.25 mm^2 (0.0019 in^2.).

HINT:
To calculate the square of the stripped wire harness section–
Square = 3.14 x (Diameter)^2 divided by 4

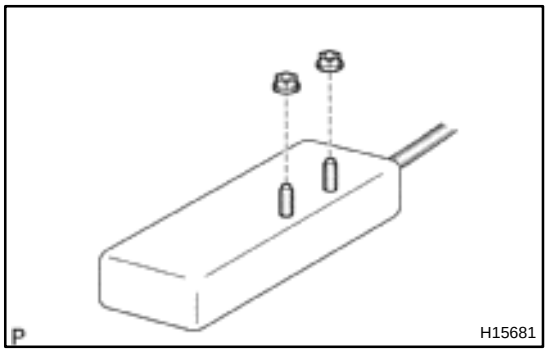

(1) Install the 2 nuts to the side airbag assembly.

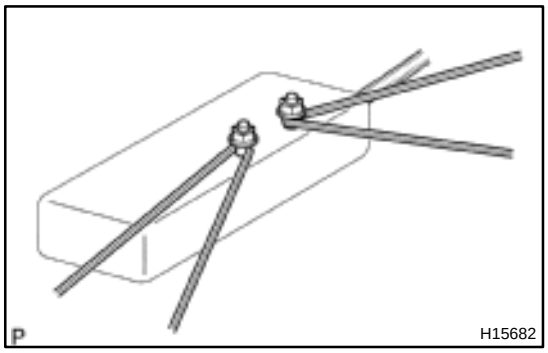

(2) Wind the wire harness around the stud bolts of the side airbag assembly as shown in the illustration.

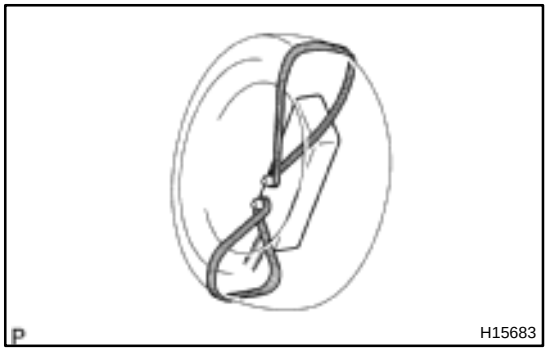

(3) Position the side airbag assembly inside the tire with the airbag deployment direction facing inside.

Tire size: Must exceed the following dimensions–
Width: 185 mm (7.28 in.)
Inner diameter: 360 mm (14.17 in.)

CAUTION:

- **Make sure the wire harness is tight. It is very dangerous when a loose wire harness results in the side airbag assembly coming free due to the shock from the airbag deploying.**
- **Always tie down the side airbag assembly with the airbag deployment side facing inside.**

NOTICE:

The tire will be marked by the airbag deployment, so when disposing of the airbag use a redundant tire.

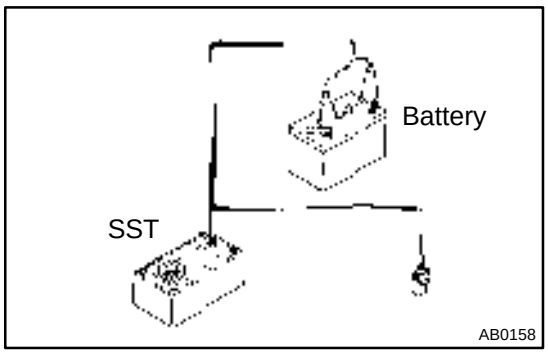

(e) Check functioning of the SST (See step 1–(a) on page RS–16).
SST 09082–00700

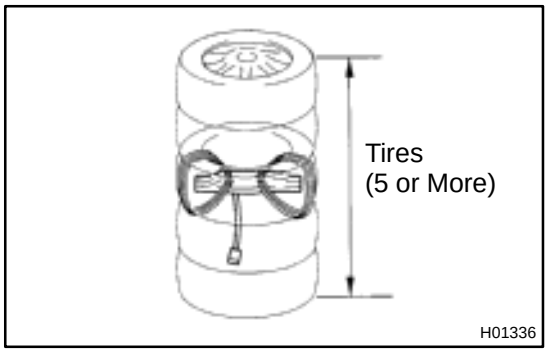

(f) Place the tires.
(1) Place at least 2 tires under the tire to which the side airbag assembly is tied.
(2) Place at least 2 tires over the tire to which the side airbag assembly is tied. The top tire should have the wheel installed.

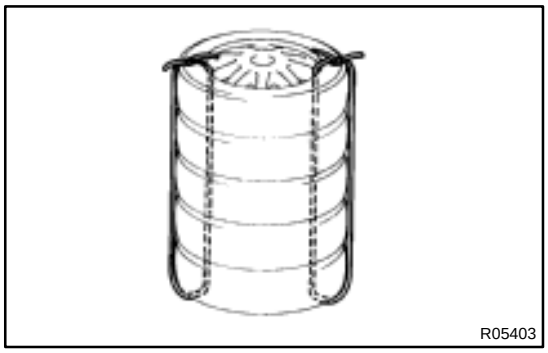

(3) Tie the tires together with 2 wire harness.

CAUTION:
Make sure that the wire harness are tight. It is very dangerous when loose wire harness results in the tires coming free due to the shock from the airbag deploying.

HINT:
Place the SST connector and wire harness inside tires. Secure at least 1 m (3 ft) of slack for the wire harness.

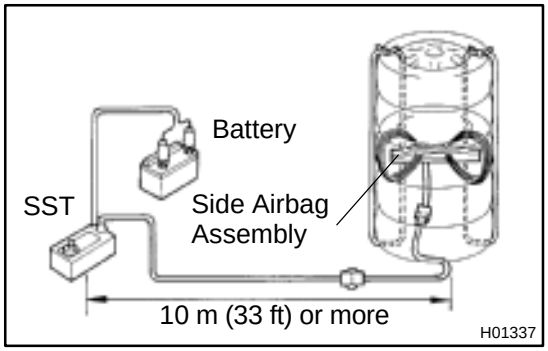

(g) Install the SST.
Connect the connectors of the 2 SST to the side airbag assembly connector.
SST 09082–00700, 09082–00750

NOTICE:
To avoid damaging the SST connector and wire harness, do not lock the secondary lock of the twin lock. Also, secure some slack for the SST wire harness inside the tire.

(h) Deploy the airbag.
(1) Connect the SST red clip to the battery positive (+) terminal and the black clip to the battery negative (–) terminal.
(2) Check that no one is within 10 m (33 ft) area around the tire which the side airbag assembly is tied to.
(3) Press the SST activation switch and deploy the airbag.

HINT:
The airbag deploys simultaneously as the LED of the SST activation switch lights up.

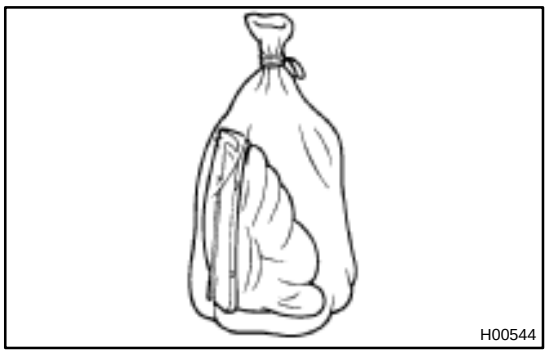

(i) Dispose of the side airbag assembly.

CAUTION:

- **The side airbag assembly is very hot when the airbag is deployed, so leave it alone for at least 30 minutes after deployment.**
- **Use gloves and safety glasses when handling a side airbag assembly with the deployed airbag.**
- **Do not apply water etc. to a side airbag assembly with the deployed airbag.**
- **Always wash your hands with water after completing the operation.**

(1) Remove the side airbag assembly from the tire.

(2) Place the side airbag assembly in a vinyl bag, tie the end tightly and dispose of it in the same way as other general parts disposal.

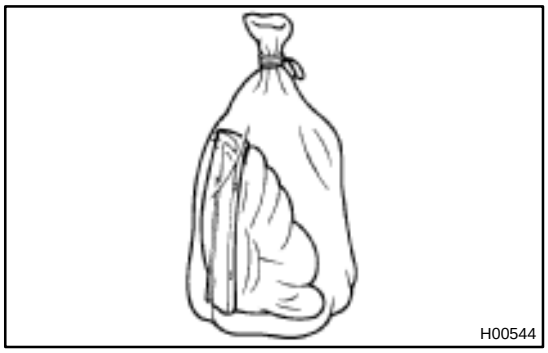

3. DEPLOYMENT WHEN DISPOSING OF SIDE AIRBAG ASSEMBLY WITH AIRBAG DEPLOYED IN COLLISION

Dispose of the side airbag assembly.

CAUTION:

- **The side airbag assembly is very hot when the airbag is deployed, so leave it alone for at least 30 minutes after deployment.**
- **Use gloves and safety glasses when handling a side airbag assembly with the deployed airbag.**
- **Do not apply water etc. to a side airbag assembly with the deployed airbag.**
- **Always wash your hands with water after completing the operation.**

(1) Remove the side airbag assembly from the seat (See page RS–40 and see step 2).

(2) Place the side airbag assembly in a vinyl bag, tie the end tightly and dispose of it in the same way as other general parts disposal.

RS0RB–01

INSTALLATION

NOTICE:

Never use airbag parts from another vehicle. When replacing parts, replace them with new parts.

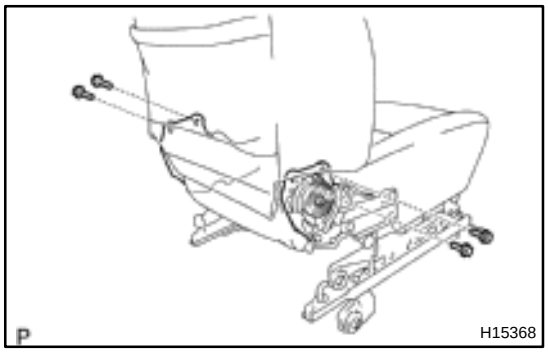

1. INSTALL SEATBACK ASSEMBLY

(a) Install the seatback assembly to the seat adjuster with the 4 bolts.

Torque: 43 N·m (440 kgf·cm, 32 ft·lbf)

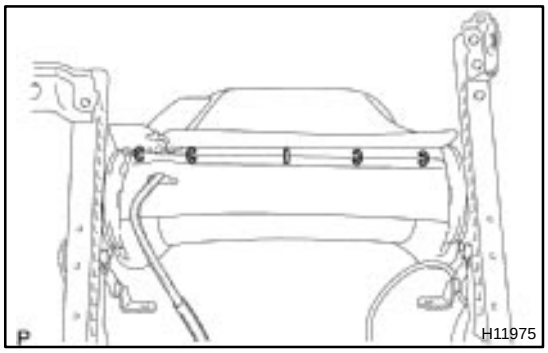

(b) Install 5 new hog rings.

HINT:

When installing the hog rings, take care to prevent wrinkles as little as possible.

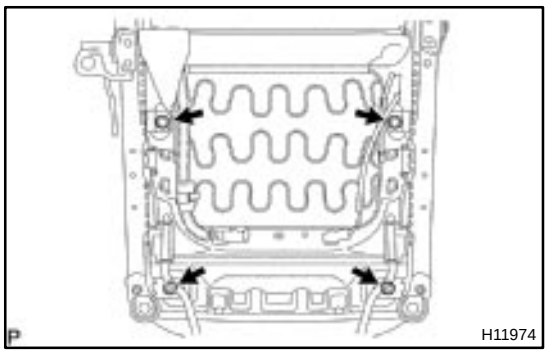

2. INSTALL SEAT CUSHION ASSEMBLY

Install the seat cushion assembly.

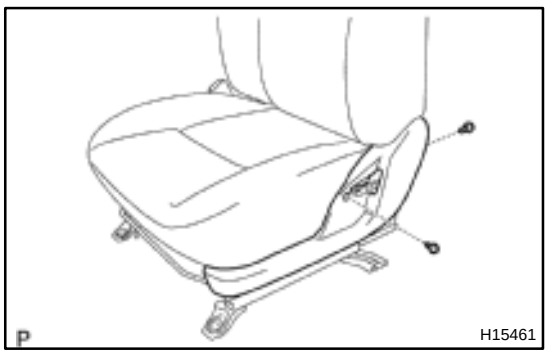

3. INSTALL FRONT SEAT CUSHION SHIELDS

(a) Install the inner front seat cushion shield with the 2 screws.

(b) Employ the same manner described above to the other side.

4. INSTALL RECLINING ADJUSTER RELEASE HANDLE



5. INSTALL FRONT SEAT

NOTICE:

When mounting the seat to the vehicle, take care not to damage the airbag wire harness.

(a) Connect the side airbag connector.

(b) Slide the front seat to the most front position.

NOTICE:

Make sure that seat adjuster locks.

(c) Without holding the seat track handle, mount the seat to the vehicle.

HINT:

If holding the seat track handle, the adjusted rearmost position slip off.

(d) Tighten the bolts on the front side temporarily, from the bolt on the inner side tighten them completely.

Torque: 37 N·m (375 kgf·cm, 27 ft·lbf)

(e) Slide the seat to the most front position to install the bolts on the rear side.

Torque: 37 N·m (375 kgf·cm, 27 ft·lbf)

(f) Install the 2 seat track covers.

BODY ELECTRICAL SYSTEM

BE0OM–08

PRECAUTION

HINT:

Take care to observe the following precautions when performing inspections or removal and replacement of body electrical related parts.

1. HEADLIGHT SYSTEM

Halogen bulbs have pressurized gas inside and require special handling. They can burst if scratched or dropped. Hold a bulb only by its plastic or metal case.

Don’t touch the glass part of a bulb with bare hands.

2. SRS (SUPPLEMENTAL RSTRAINT SYSTEM)

The PRIUS is equipped with an SRS (Supplemental Restraint System) such as the driver airbag, side airbag and front passenger airbag. Failure to carry out service operation in the correct sequence could cause the SRS to unexpectedly deploy during servicing, possibly leading to a serious accident. Before servicing (including removal or installation of parts, inspection or replacement), be sure to read the precautionary notices in the RS section.

TROUBLESHOOTING

BE16S–02

PROBLEM SYMPTOMS TABLE

IGNITION SWITCH:

This system uses the multiplex communication system, so check diagnosis system of the multiplex communication system before you proceed with troubleshooting.

Symptom	Suspect Area	See page
Ignition switch is not set to each position.	3. Ignition switch 4. Power source circuit	BE–17 –

KEY UNLOCK WARNING SWITCH:

This system uses the multiplex communication system, so check diagnosis system of the multiplex communication system before you proceed with troubleshooting.

Symptom	Suspect Area	See page
Key unlock warning system does not operate. (The buzzer sounds when the ignition key is ACC or ON)	1. Ignition Switch 2. Key Unlock Warning Switch 3. Wire Harness 4. Body ECU 5. Combination Meter	BE–17 BE–17 – – –

HEADLIGHT AND TAILLIGHT SYSTEM:

This system uses the multiplex communication system, so check diagnosis system of the multiplex communication system before you proceed with troubleshooting.

Symptom	Suspect Area	See page
Auto turn–off system does not operate when the driver's door is opened.	1. Drivers Door Courtesy Switch 2. Body ECU	BE–27 DI–678
Auto turn–off system: Headlight and taillight do not come on.	1. Body ECU 2. Wire Harness	DI–678 –
Auto turn–off system: Headlight and taillight stay on.	1. Body ECU 2. Wire Harness	DI–678 –

w/o Daytime Running Light System:

Symptom	Suspect Area	See page
Only one headlight comes on.	1. Bulb 2. Wire Harness	– –
"LO–Beam" does not light (All).	1. Headlight Control Relay 2. Wire Harness	BE–20 –
"LO–Beam" does not light (One side).	1. Bulb 2. HEAD LH Fuse 3. HEAD RH Fuse 4. Wire Harness	– BE–12 BE–12 –
"HI–Beam" does not light (All).	1. Headlight Dimmer Switch 2. Wire Harness	BE–20 –
"HI–Beam" does not light (One side).	1. Bulb 2. HEAD LH Fuse 3. HEAD RH Fuse 4. Wire Harness	– BE–12 BE–12 –
"Flash" does not light.	1. HEAD LH Fuse 2. HEAD RH Fuse 3. Headlight Dimmer Switch 4. Wire Harness	BE–12 BE–12 BE–20 –
"Flash" does not light.	1. Bulb 2. Wire Harness	– –

Headlight does not come on.	1. Headlight Control Relay 2. Wire Harness	BE–20 –
Headlight does not come on.	1. Bulb 2. Wire Harness	– –
Headlight flickers.	1. Bulb 2. Wire Harness	– –
Headlight is dark.	1. Bulb 2. Wire Harness	– –
Only one taillight comes on.	1. Bulb 2. Wire Harness	– –
Taillight does not come on. (Headlight is normal)	1. TAIL Fuse 2. Taillight Control Relay 3. Light Control Switch 4. Wire Harness	BE–12 BE–42 BE–20 –
Taillight does not come on. (Headlight does not light)	1. Light Control Switch 2. Wire Harness	BE–20 –

w/ Daytime Running Light System:

Symptom	Suspect Area	See page
Only one headlight comes on.	1. Daytime Running Light Relay 2. Daytime Running Light Main Relay 3. Bulb 4. Wire Harness	BE–20 BE–20 – –
”LO–Beam” does not light (All).	1. Headlight Control Relay 2. Wire Harness	BE–20 –
”LO–Beam” does not light (One side).	1. Bulb 2. HEAD LO (LH) Fuse 3. HEAD LO (RH) Fuse 4. Wire Harness	– BE–12 BE–12 –
”HI–Beam” does not light (All).	1. Headlight Dimmer Switch 2. Daytime Running Light Main Relay 3. Combination Meter	BE–20 BE–20 –
”HI–Beam” does not light (One side).	1. Bulb 2. HEAD HI (LH) Fuse 3. HEAD HI (RH) Fuse 4. Daytime Running Light No.2 Relay 5. Wire Harness	– BE–12 BE–12 BE–20 –
”Flash” does not light.	1. Headlight Dimmer Switch 2. Daytime Running Light Main Relay 3. Wire Harness	BE–20 BE–20 –
Headlight does not come on.	1. Headlight Control Relay 2. Daytime Running Light Main Relay 3. Daytime Running Light No.2 Relay 4. Headlight Dimmer Switch 5. Light Control Switch 6. Body ECU 7. Wire Harness 8. Bulb	BE–20 BE–20 BE–20 BE–20 BE–20 DI–678 – –
Headlight does not come on with light control switch in HEAD.	1. Light Control Switch 2. Body ECU 3. Wire Harness	BE–20 DI–678 –
Headlight does not go out with light control switch in OFF.	1. Headlight Control Relay 2. Body ECU 3. Wire Harness	BE–20 DI–678 –

Headlight flickers.	1. Bulb 2. Wire Harness	– –
Headlight is dark.	1. Bulb 2. Wire Harness	– –
Taillight does not come on with light control switch in TAIL.	1. Taillight Control Relay 2. Wire Harness	BE–20 –
Taillight does not go out with light control switch in OFF.	1. Taillight Control Relay 2. Wire Harness	BE–20 –
Headlight does not come on with engine running and light control switch in OFF.	1. ECU–B Fuse 2. GAUGE Fuse 3. Daytime Running Light Main Relay 4. Daytime Running Light Relay 5. Alternator L Terminal 6. Body ECU 7. Parking Brake Switch 8. Wire Harness	BE–12 BE–12 BE–20 BE–20 – DI–678 BE–42 –

TURN SIGNAL AND HAZARD WARNING SYSTEM

Symptom	Suspect Area	See page
”Hazard” and ”Turn” do not light up.	1. GAUGE Fuse 2. TURN HAZ Fuse 3. Ignition Switch 4. Turn Signal Flasher Relay 5. Wire Harness	BE–12 BE–12 BE–17 BE–25 –
Hazard warning light does not light up. (Turn is normal)	1. Hazard Warning Switch 2. Wire Harness	BE–25 –
Turn signal does not light up. (Hazard is normal)	1. Turn Signal Switch 2. Wire Harness	BE–25 –
Turn signal does not light up in one direction.	1. Turn Signal Switch 2. Wire Harness	BE–25 –
Only one bulb does not light up.	1. Bulb 2. Wire Harness	– –

INTERIOR LIGHT SYSTEM

This system uses the multiplex communication system, so check diagnosis system of the multiplex communication system before you proceed with troubleshooting.

Symptom	Suspect Area	See page
All the lights do not come ON.	DOME Fuse	BE–12
The driver door courtesy light does not come ON when the driver’s door is opened.	1. Driver’s Door Courtesy Switch 2. Wire Harness 3. Body ECU	BE–27 – –
The passenger door courtesy light does not come ON when the passenger's door is opened.	1. Passenger’s Door Courtesy Switch 2. Wire Harness 3. Body ECU	BE–27 – DI–678
The room light does not come on when the rear–right door is opened.	1. Rear–Right Door Courtesy Switch 2. Wire Harness 3. Body ECU 4. Room Light	BE–27 – DI–678 –
The room light does not come on when the rear–left door is opened.	1. Rear–Left Door Courtesy Switch 2. Wire Harness 3. Body ECU 4. Room Light	BE–27 – DI–678 –
Only one of the bulbs comes ON.	Bulb	–

The illumination does not fade out when all the doors are closed.	1. Courtesy Switch 2. Wire Harness 3. Body ECU	BE–27 – DI–678
The illumination does not fade out immediately when the ignition switch is turned to ACC or ON within 15 seconds after all the doors are closed.	1. Ignition Switch 2. ECU–B Fuse 3. GAUGE Fuse 4. Wire Harness 5. Body ECU	BE–17 BE–12 BE–12 – DI–678
The illumination does not fade out immediately when all the doors are locked within 15 seconds after they are closed.	1. Door Unlock Detection Switch 2. Wire Harness 3. Body ECU	BE–62 – DI–678
Interior light does not light up. (in front personal light)	1. Bulb 2. Personal Light 3. Wire Harness	– BE–27 –
Front personal light does not light up.	1. Bulb 2. Personal Light 3. Wire Harness	– BE–27 –
Rear personal light does not light up.	1. Bulb 2. Interior Light 3. Wire Harness	– BE–27 –
Luggage compartment light does not light up.	1. Bulb 2. Luggage Compartment Door Courtesy Switch 3. Wire Harness	– BE–27 –
Courtesy light does not light up.	1. Bulb 2. Door Courtesy Switch 3. Wire Harness 4. Body ECU	– BE–27 – DI–678

BACK–UP LIGHT SYSTEM

Symptom	Suspect Area	See page
Back–Up Light does not light up.	1. GAUGE Fuse 2. Ignition Switch 3. Back–up Light Relay 4. Wire Harness 5. Bulb	BE–12 BE–17 BE–30 – –
Back–Up Light remains always on.	1. Bulb 2. Wire Harness	– –
Only one light does not light up.	1. Bulb 2. Wire Harness	– –

STOP LIGHT SYSTEM

Symptom	Suspect Area	See page
Stop light does not light up.	1. STOP Fuse 2. Stop Light Switch 3. Wire Harness	BE–12 BE–32 –
Stop light always lights up.	1. Stop Light Switch 2. Wire Harness	BE–32 –
Only one light always lights up.	Wire Harness	–
Only one light does not light up.	1. Bulb 2. Wire Harness	– –

WIPER AND WASHER SYSTEM

Symptom	Suspect Area	See page
Wipers and washer do not operate.	1. WIPER Fuse 2. Wiper Switch 3. Wiper Motor 4. Wire Harness	BE–12 BE–34 BE–34 –
Wipers do not operate in LO, HI or MIST.	1. Wiper Switch 2. Wiper Motor 3. Wire Harness	BE–34 BE–34 –
Wipers do not operate in INT.	1. Wiper Switch 2. Wiper Motor 3. Wire Harness	BE–34 BE–34 –
Washer motor does not operate.	1. WASHER Fuse 2. Washer Switch 3. Washer Motor 4. Wire Harness	BE–12 BE–34 BE–34 –
Wipers do not operate when washer switch ON.	1. WASHER Fuse 2. Washer Switch 3. Wiper Motor 4. Wire Harness	BE–12 BE–34 BE–34 –
Washer fluid does not operate.	Washer Hose and Nozzle	–
● When wiper switch is in HI position, the wiper blade is in contact with the body. ● When the wiper switch is OFF, the wiper blade does not retract or the retract position is wrong.	1. Wiper Motor *1 2. Wire harness *1	BE–34 –

*1: Inspect wiper arm and blade set positions.

Meter Gauges and Illumination:
COMBINATION METER

Symptom	Suspect Area	See page
Fuel Gauge and Water Temperature Gauge does not operate.	1. GAUGE Fuse 2. Meter Circuit Plate 3. Wire Harness	– BE–39 –
Speedometer does not operate.	1. Vehicle Speed Sensor 2. Meter Circuit Plate 3. Wire Harness	BE–42 BE–39 –
Tachometer does not operate.	1. Igniter 2. Engine and ECT ECU 3. Meter Circuit Plate 4. Wire Harness	– – BE–39 –
Fuel Gauge does not operate or abnormal operation.	1. Fuel Tank Assembly 2. Wire Harness	– –
All illumination lights do not light up.	1. TAIL Fuse 2. Meter Circuit Plate 3. Wire Harness	– BE–42 –
Only one illumination light does not light up.	1. Bulb 2. Wire Harness	– –

Warning Lights:
COMBINATION METER

Symptom	Suspect Area	See page
Warning light do not light up. (Except Discharge, Open Door and SRS)	1. GAUGE Fuse 2. Meter Circuit Plate 3. DC/DC converter 4. Wire Harness	– BE–39 – –
Fuel Level warning light does not light up.	1. Bulb 2. Meter Circuit Plate 3. Fuel Tank Assembly 4. Wire Harness	– BE–39 – –
Low Oil Pressure warning light does not light up.	1. Bulb 2. Low Oil Pressure Warning Switch 3. Meter Circuit Plate 4. Wire Harness	– BE–42 BE–39 –
ABS warning light does not light up.	1. Bulb 2. ABS ECU 3. Wire Harness	– DI–351 –
Seat Belt warning light does not light up.	1. Bulb 2. Buckle Switch 3. Meter Circuit 4. Wire Harness	– BE–42 BE–42 –
Brake warning light does not light up.	1. Bulb 2. Parking Brake Switch 3. Brake Fluid Level Warning Switch 4. Meter Circuit Plate 5. Wire Harness	– BE–42 BE–42 BE–39 –
SRS Warning light does not light up.	1. Bulb 2. Airbag Sensor Assembly 3. Meter Circuit Plate 4. Wire Harness	– DI–495 BE–39 –
Open Door warning light does not light up.	1. DOME Fuse 2. Bulb 3. Door Courtesy Switch 4. Meter Circuit Plate 5. Wire Harness	– – BE–27 BE–39 –

Indicator Lights:
COMBINATION METER

Symptom	Suspect Area	See page
High beam indicator light does not light up.	1. Bulb 2. Meter Circuit Plate 3. Wire Harness 4. Headlight System	– BE–39 – BE–20
Turn indicator light does not light up.	1. Bulb 2. Meter Circuit Plate 3. Wire Harness 4. Turn Signal and Hazard Warning System	– BE–39 – BE–25
Malfunction indicator light does not light up.	1. Bulb 2. ECM 3. Meter Circuit Plate 4. Wire Harness	– – BE–39 –
Indicator lights do not light up. (Except Turn, Hi–beam and security)	1. GAUGE Fuse 2. Wire Harness	– –

Shift position indicator light does not light up.	1. ECM 2. Shift Position Sensor 3. HV ECU 4. Meter Circuit Plate 5. Wire Harness	– HT–54 – BE–39 –
CRUISE indicator light does not light up.	1. Bulb 2. HV ECU 3. Meter Circuit Plate 4. Wire Harness	– – BE–39 –

DEFOGGER SYSTEM

This system uses the multiplex communication system, so check diagnosis system of the multiplex communication system before you proceed with troubleshooting.

Symptom	Suspect Area	See page
Rear window defogger does not operate.	1. DEF M–Fuse 2. Defogger Relay 3. Defogger Switch (in A/C Amplifier) 4. Defogger Wire 5. Wire Harness 6. Body ECU 7. Noise Filter 8. A/C ECU	BE–12 BE–49 DI–864 BE–49 – DI–678 – DI–864
Mirror heater does not operate.	1. M–HTR Fuse (Passenger SIde J/B) 2. Mirror Heater Relay 3. Mirror Heater 4. Wire Harness	BE–12 BE–49 BE–49 –

POWER WINDOW CONTROL SYSTEM

This system uses the multiplex communication system, so check diagnosis system of the multiplex communication system before you proceed with troubleshooting.

Symptom	Suspect Area	See page
Power window dose not operate.	1. ECU B Fuse 2. GAUGE Fuse 3. Power Main Relay 4. Ignition Switch 5. Power Window Master Switch 6. Body ECU 7. Wire Harness	BE–12 BE–12 BE–56 BE–17 BE–56 DI–678 –
Only the driver's window does not operate.	1. Power Window Master Switch 2. Power Window Switch 3. Power Window Motor 4. Wire Harness	BE–56 BE–56 BE–56 –
"Window lock function" does not operate.	Power Window Master Switch	BE–56
Illumination does not light up.	Power Window Master Switch	BE–56

POWER DOOR LOCK CONTROL SYSTEM

This system uses the multiplex communication system, so check diagnosis system of the multiplex communication system before you proceed with troubleshooting.

Symptom	Suspect Area	See page
All the doors cannot be locked or unlocked. (Power Window Control System is normal.)	1. Door Lock Control Switch 2. Body ECU 3. Wire Harness	BE–62 DI–678 –
Only one side door lock control does not operate.	1. Door Lock Motor 2. Wire Harness	BE–62 –
Door key related function does not operate.	1. Door Key Lock and Unlock Switch 2. Body ECU 3. Wire Harness	BE–62 DI–678 –
Key confinement prevention function does not operate.	1. Key Unlock Warning Switch 2. Door Courtesy Switch 3. Body ECU 4. Wire Harness	BE–17 BE–27 DI–678 –

THEFT DETERRENT SYSTEM

This system uses the multiplex communication system, so check diagnosis system of the multiplex communication system before you proceed with troubleshooting.

HINT:

Troubleshooting of the theft deterrent system is based on the premise that the door lock control system is operating normally. Accordingly, before troubleshooting the theft deterrent system, first make certain that the door lock control system is operating normally.

Symptom	Suspect Area	See page
The theft deterrent system cannot be set	1. Indicator light circuit 2. ECU power source circuit 3. Key unlock warning switch circuit 4. Door key lock and unlock switch circuit 5. Door courtesy switch circuit 6. Door unlock detection switch circuit 7. Engine hood courtesy switch circuit	DI–704 DI–685 DI–695 DI–724 DI–714 DI–710 DI–720
The indicator light does not blink when system is set.	Indicator light circuit	DI–704
When the system is set (The system does not operate when the rear door is unlocked).	Door unlock detection switch circuit	DI–710
When the system is set (The system does not operate when the luggage compartment door is opened by a method other than the key).	Luggage compartment door courtesy switch circuit	DI–722
When the system is set (The system does not operate when the engine hood is lifted).	Engine hood courtesy switch circuit	DI–720
While the system is in warning operation (Horns do not sound).	Horn relay circuit	DI–697
While the system is in warning operation (Headlights do not flash).	Headlight control relay circuit	DI–693
While the system is in warning operation (Taillights do not flash).	Taillight control relay circuit	DI–691
While the system is in warning operation (The door lock is not locked).	Door unlock detection switch circuit	DI–710
System is still set even when a rear door is open	Door courtesy switch circuit	DI–714
Even when the system is not set (Horns sound).	Horn relay circuit	DI–697

Even when the system is not set (Headlights stay on).	Headlight control relay circuit	DI–697
Even when the system is not set (Taillights stay on).	Taillight control relay circuit	DI–691

WIRELESS DOOR LOCK CONTROL SYSTEM

This system uses the multiplex communication system, so check diagnosis system of the multiplex communication system before you proceed with troubleshooting.

HINT:

- Troubleshooting of the wireless door lock control system is based on the premise that the door lock control system is operating normally. Accordingly, before troubleshooting the wireless door lock control system, first make certain that the door lock control system is operating normally.
- If the trouble still reappears even though there are no abnormalities in any of the other circuits, then check and replace the Wireless Door Lock Control Receiver as the last step.

Symptom	Suspect Area	See page
All functions of wireless door lock control system do not operate.	1. Transmitter 2. Wireless Door Lock Control Receiver 3. Wire Harness 4. Body ECU	BE–83 BE–83 – DI–678

POWER MIRROR CONTROL SYSTEM

Symptom	Suspect Area	See page
Both right and left mirrors do not operate.	1. ACC Fuse 2. ACC Relay 3. Mirror Switch 4. Wire Harness	BE–12 BE–12 BE–93 –
Only one side of mirror does not operate.	1. Mirror Motor 2. Wire Harness	BE–93 –

AUDIO SYSTEM

Symptom	Suspect Area	See page
Audio system abnormal operation.	TROUBLESHOOTING	BE–97

CLOCK SYSTEM

Symptom	Suspect Area	See page
Clock will not operate.	TROUBLESHOOTING NO.1	BE–102
Clock loses or gains time.	TROUBLESHOOTING NO.2	BE–102

HYBRID BEHICLE IMMOBILIZER SYSTEM

Symptom	Suspect Area	See page
Hybrid vehicle immobilizer system does not operate.	Pre–check	BE–111

HORN SYSTEM

Symptom	Suspect Area	See page
Horn system does not operate.	1. HORN Fuse 2. Horn Relay 3. Horn Switch 4. Horn 5. Wire Harness	BE–12 BE–117 BE–117 BE–117 –
Horns blow all the time.	1. Horn Relay 2. Horn Switch 3. Wire Harness	BE–117 BE–117 –
One horn operates but the other horn does not operate.	1. Horn 2. Wire Harness	BE–117 –
Horns operate abnormally.	1. Horn Relay 2. Horn 3. Wire Harness	BE–117 BE–117 –

POWER SOURCE

LOCATION

BE1UY–02

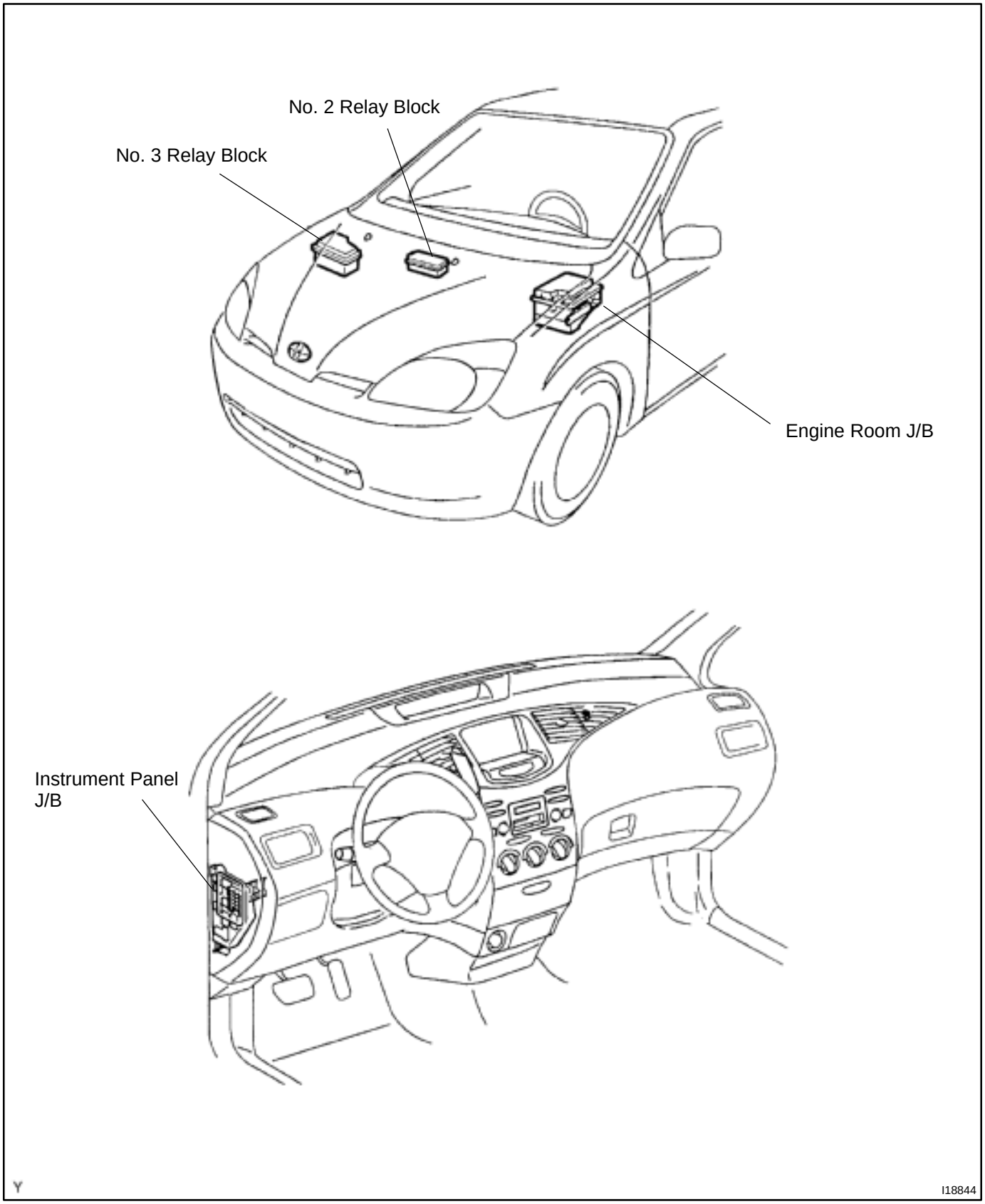

Engine room J/B:

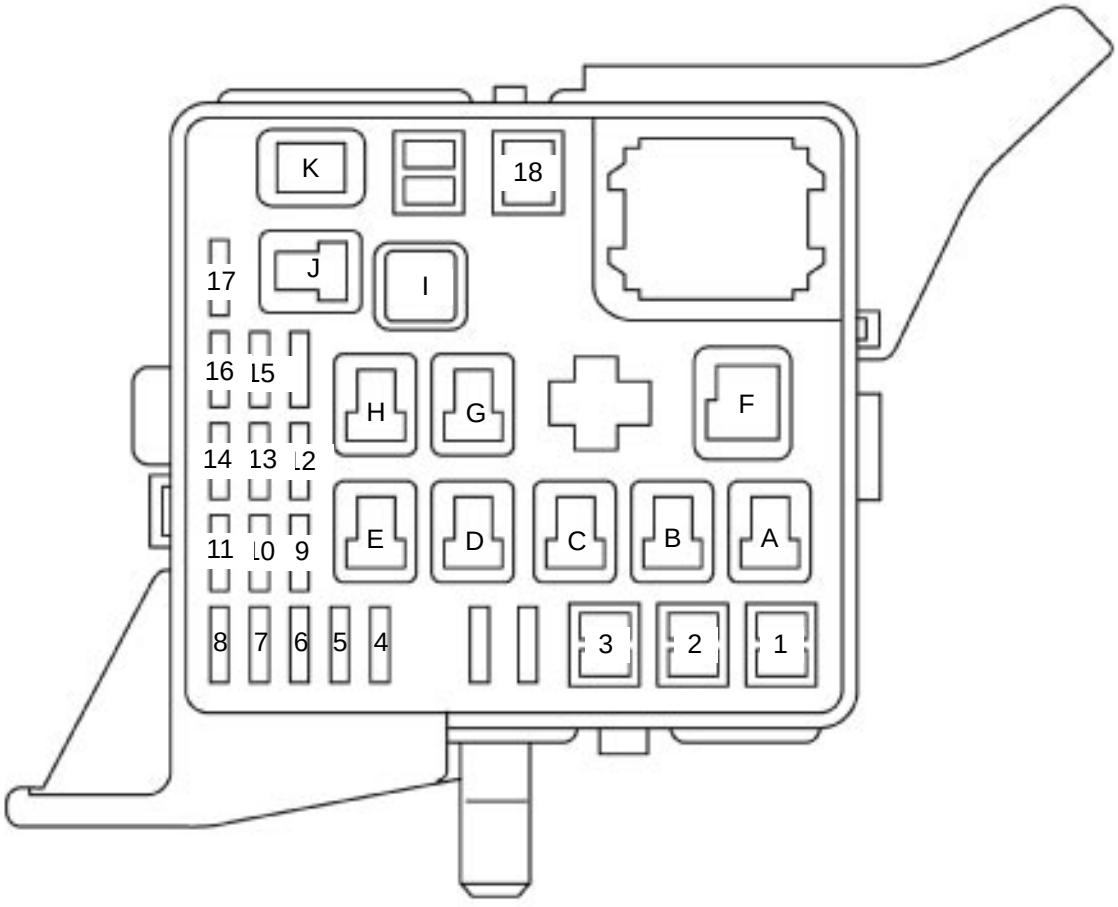

Fuses:

1. HTR Fuse
2. RDI Fuse
3. ABS No. 2 Fuse
4. CDS FAN Fuse
5. HORN Fuse
6. THRO Fuse
7. ABS No. 3 Fuse
8. TURN–HAZ Fuse
9. AM2 Fuse
10. BATT FAN
11. DOME Fuse
12. HEAD HI (RH) Fuse *1
13. HEAD HI (LH) Fuse *1
14. HEAD LO (LH) *1
    HEAD (LH) *2
15. HEAD LO (RH) *1
    HEAD (RH) *2
16. EFI Fuse
17. HEV Fuse
18. HEAD Fuse *1

*1: w/ Daytime Running Light
*2: w/o Daytime Running Light

Relays:

A. FAN NO. 1 Relay
B. FAN NO. 2 Relay
C. FAN NO. 3 Relay
D. IG2 Relay
E. HORN Relay
F. HTR Relay
G. EFI Relay
H. CLR MG Relay
I. HEAD Relay
J. CIR OPN Relay
K. DIM Relay *1

I17787

Instrument Panel J/B:

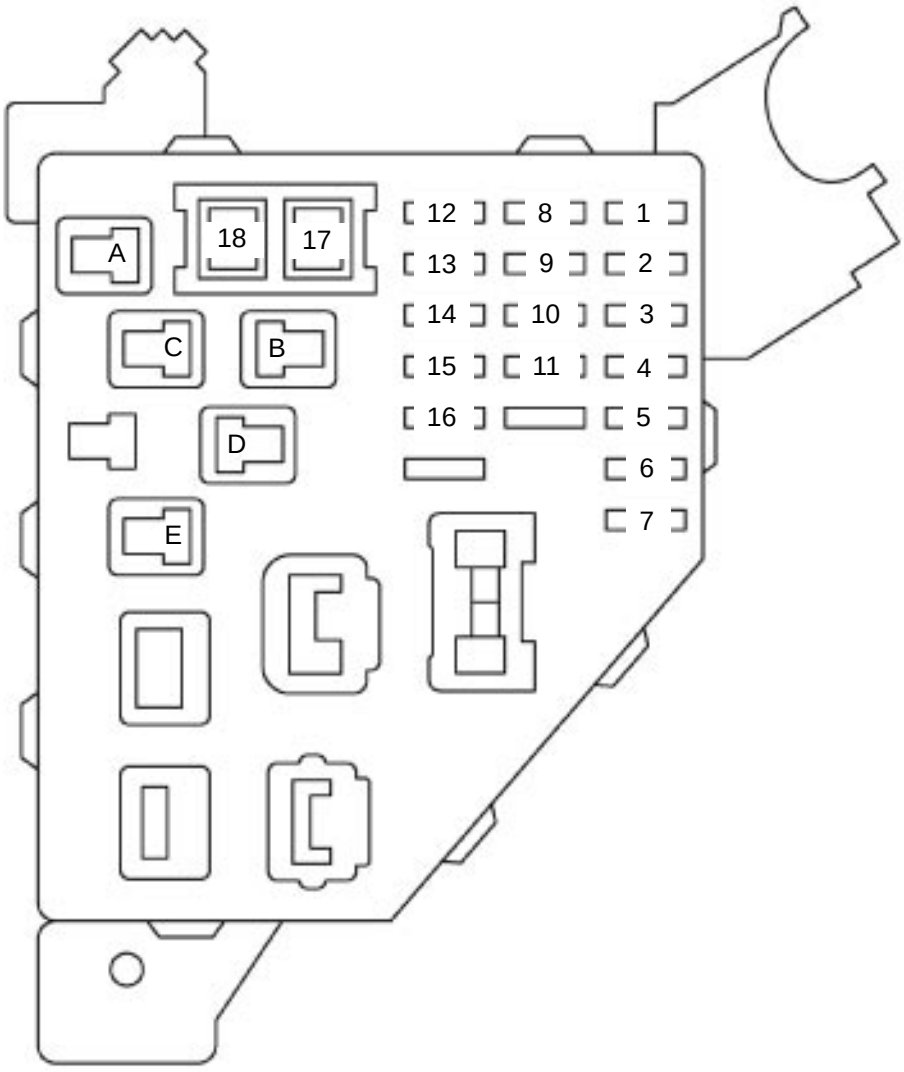

Fuses:

1. HTR Fuse
2. STOP Fuse
3. ECU–B Fuse
4. DOOR Fuse
5. OBDII Fuse
6. PWR1 Fuse
7. AM1 Fuse
8. GAUGE Fuse
9. ECU–IG Fuse
10. WIPER Fuse
11. WASHER Fuse
12. PANEL Fuse
13. TAIL Fuse
14. ACC Fuse
15. CIG Fuse
16. SRS ACC Fuse
17. PWR Fuse
18 DEF Fuse

Relays:

A. IG1 Relay
B. ACC Relay
C. TAIL Relay
D. POWER Relay
E. DEF Relay

I17788

Engine Room R/B No. 3:

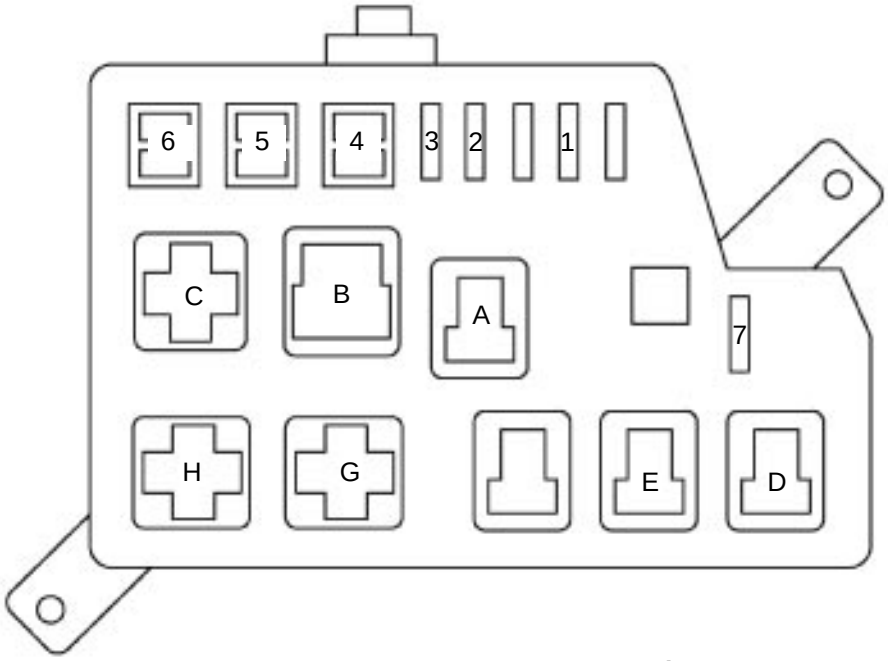

Fuses:

1. HTR2 Fuse
2. HTR1 Fuse
3. ABS No. 4 Fuse
4. ABS No. 1 Fuse
5. EMPS Fuse
6. HTR3 Fuse
7. DRL Fuse

Relays:

A. A/C W/P Relay
B. ABS SOL Relay
C. DRL Relay
D. HTR2 Relay
E. HTR1 Relay
G. HTR3 Relay
H. EPMS Relay

Engine Room R/B No. 2:

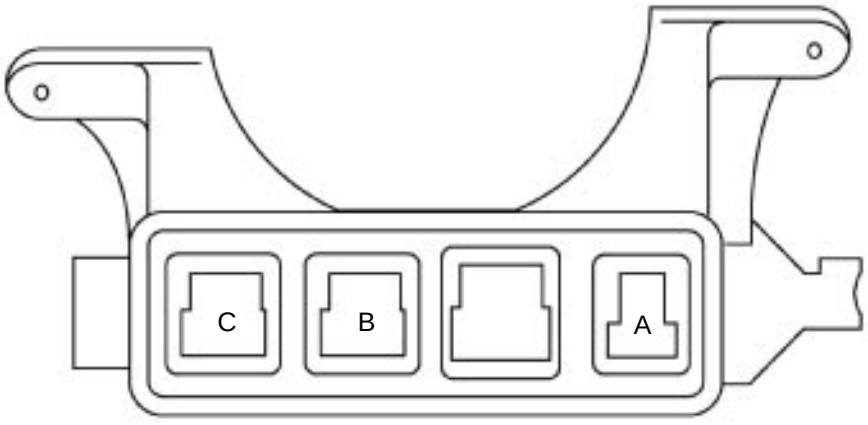

Relays:

A. IGCT Relay
B. HYDRO MTR No. 2 Relay
C. HYDRO MTR No. 1 Relay

I17789

BE1UX–02

INSPECTION

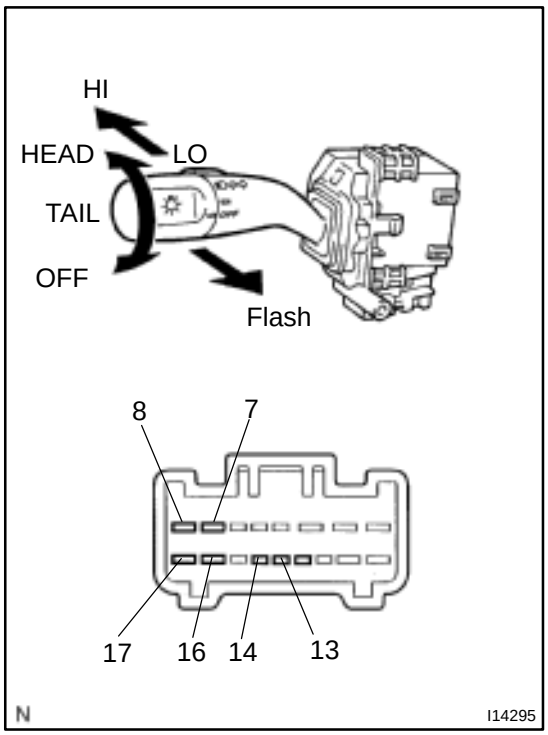

1. INSPECT LIGHT CONTROL SWITCH CONTINUITY

Switch position	Tester connection	Specified condition
OFF	–	No continuity
TAIL	14 – 16	Continuity
HEAD	13 – 14 – 16	Continuity

If continuity is not as specified, replace the switch.

2. INSPECT HEADLIGHT DIMMER SWITCH CONTINUITY

Switch position	Tester connection	Specified condition
Low beam	16 – 17	Continuity
High beam	7 – 16	Continuity
Flash	7 – 8 – 16	Continuity

If continuity is not as specified, replace the switch.

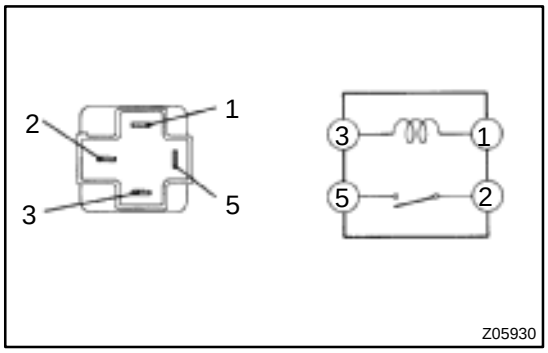

3. INSPECT HEADLIGHT CONTROL RELAY CONTINUITY

Condition	Tester connection	Specified condition
Constant	1 – 3	Continuity
Apply B+ between terminals 1 and 2.	2 – 5	Continuity

If continuity is not as specified, replace the relay.

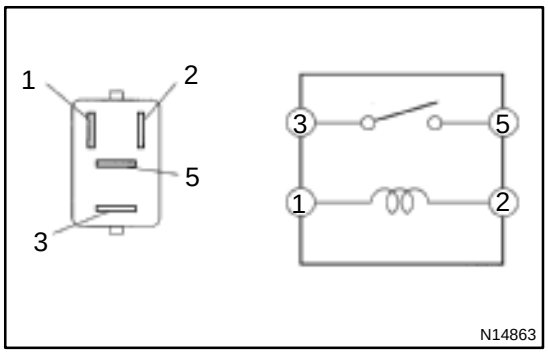

4. INSPECT TAILLIGHT CONTROL RELAY CONTINUITY

Condition	Tester connection	Specified condition
Constant	1 – 2	Continuity
Apply B+ between terminals 1 and 2.	3 – 5	Continuity

If continuity is not as specified, replace the relay.

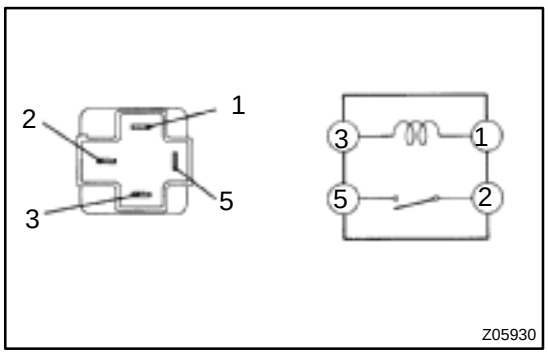

5. INSPECT DRL RELAY CONTINUITY

Condition	Tester connection	Specified condition
Constant	1 – 3	Continuity
Apply B+ between terminals 1 and 2.	2 – 5	Continuity

If continuity is not as specified, replace the relay.

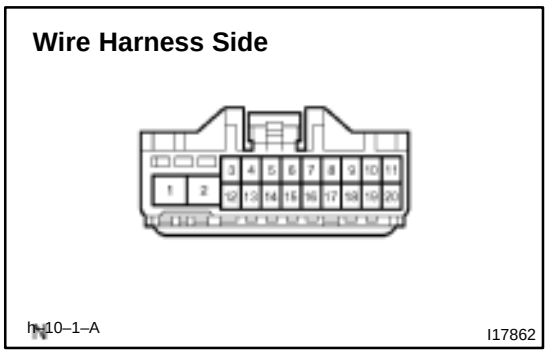

6. INSPECT DAYTIME RUNNING LIGHT MAIN RELAY CIRCUIT

Disconnect the connector from the relay and inspect the connector on the wire harness side.

Tester connection	Condition	Specified condition
2 – Ground	Constant	Continuity
3 – Ground	Constant	Battery voltage
4 – Ground	Terminal 5 ground	Battery voltage
6 – Ground	Constant	Battery voltage
7 – Ground	Light control switch OFF or TAIL	No continuity
7 – Ground	Light control switch HEAD	Continuity
8 – Ground	Headlight dimmer switch FLASH or HI	Continuity
9 – Ground	Engine running	Battery voltage
12 – Ground	Ignition switch OFF	No voltage
12 – Ground	Ignition switch ON	Battery voltage

If circuit is specified, try replacing the relay with a new one.
If circuit is not as specified, inspect the circuits connected to other parts.

BE1CY–05

ADJUSTMENT

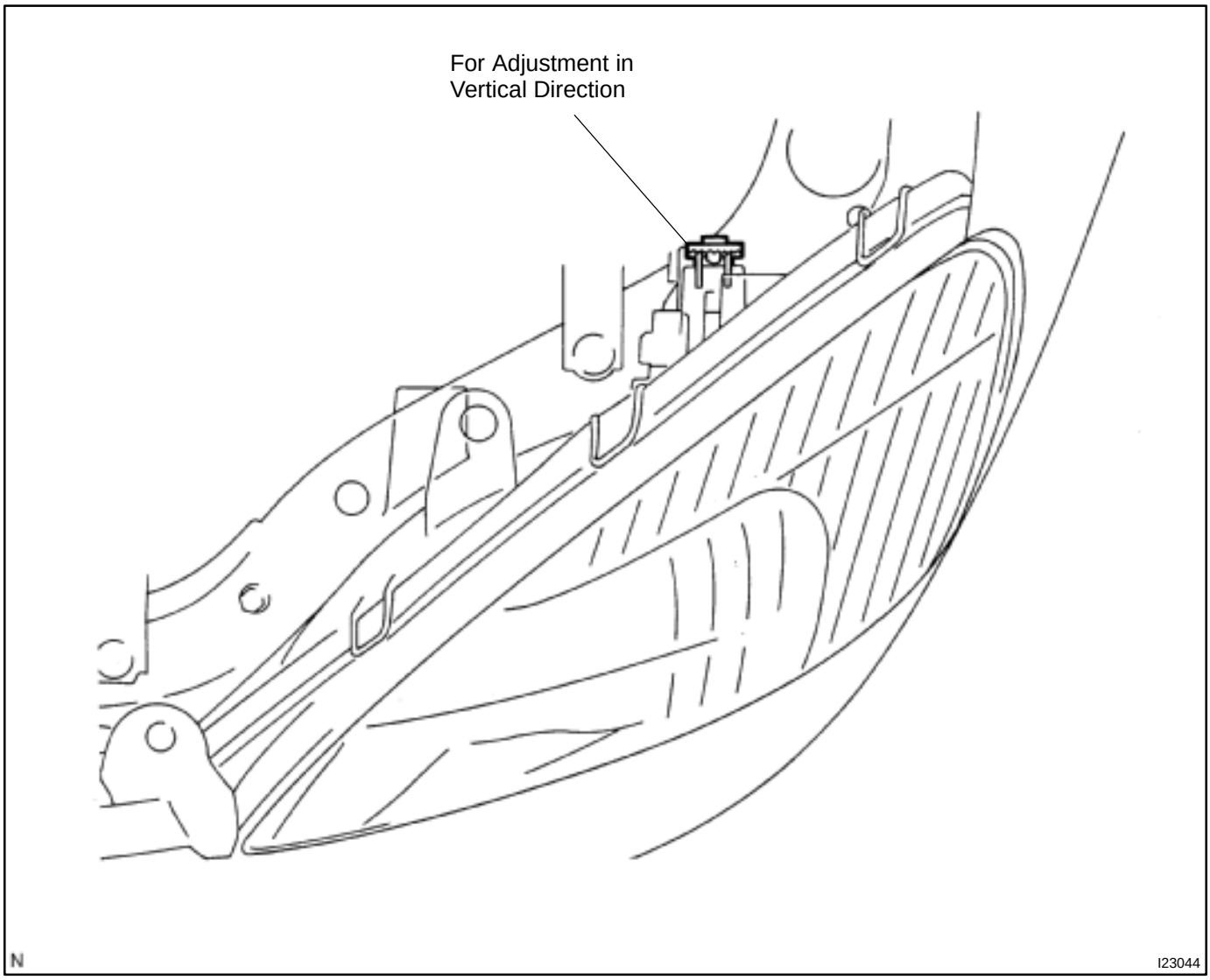

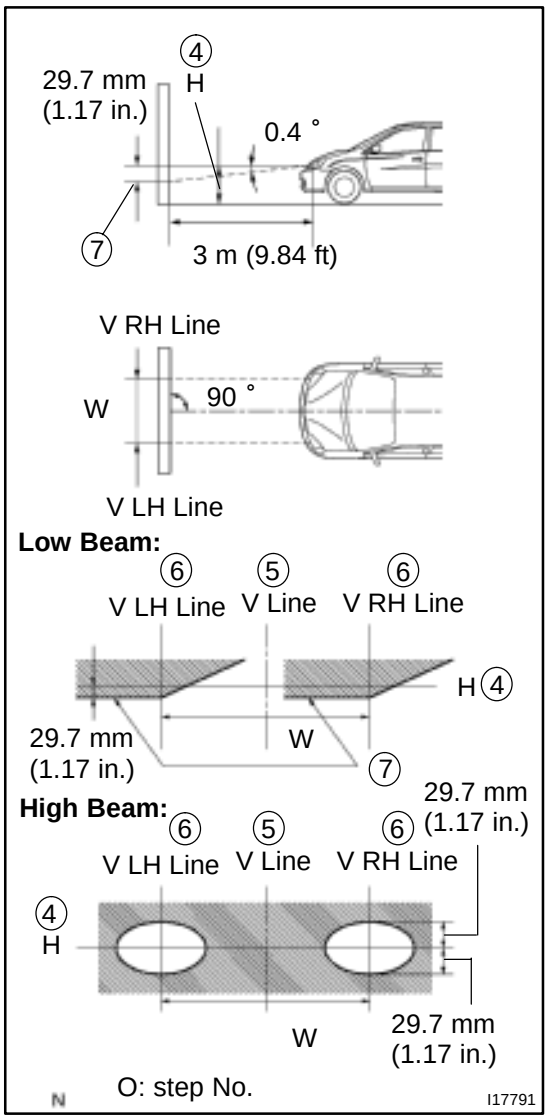

ADJUST HEADLIGHT AIM ONLY

(a) Place the vehicle in the following conditions.
- The area around the headlight is not deformed.
- The vehicle is parked on a level surface.
- Tire inflation pressure is the specified value.
- A driver is in the driver's seat and the vehicle is in a state ready for driving (with a tank full).
- The vehicle has been bounced several times.

(b) Check the headlight aiming.
(1) Prepare a thick white paper.
(2) Stand the paper perpendicular to the ground at the position 9.84 ft away from the headlights.
(3) Ensure that the center line of the vehicle and the paper face forms a 90–degree angle as shown in the illustration.
(4) Draw a horizontal line (H line) on the paper, showing where the headlights should strike.
(5) Draw a vertical line (V line) to where the center line of the vehicle is to be.
(6) Draw 2 vertical lines (by connecting the low and high beam center marks) to where the both headlights should strike (V RH and V LH lines).
(7) Draw a horizontal line (by connecting the both low beam center marks) to where the headlights should strike (H RH and H LH lines).
(8) Start the engine.
(9) Turn the headlights ON.
(10) Check that the headlights properly strike the position shown in the illustration.
(11) If not, adjust the lights in the vertical direction.

HINT:
As shown in the illustration, adjust each aim of the RH and LH lights.

(c) When adjusting it in the vertical direction:
Using adjusting bolt, adjust the headlight aim to within the specified range.

BE1V0–02

INSPECTION

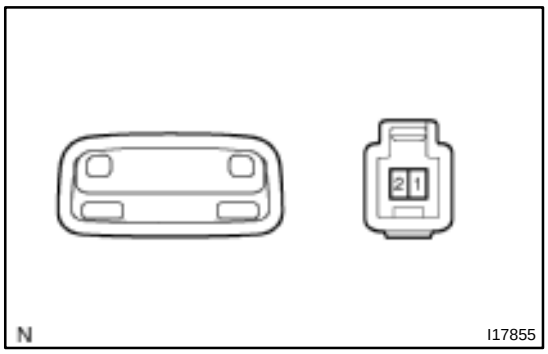

1. INSPECT FRONT PERSONAL LIGHT CONTINUITY

Using an ohmmeter, check that continuity exists between terminals.

If continuity is not as specified, replace the light assembly or bulb.

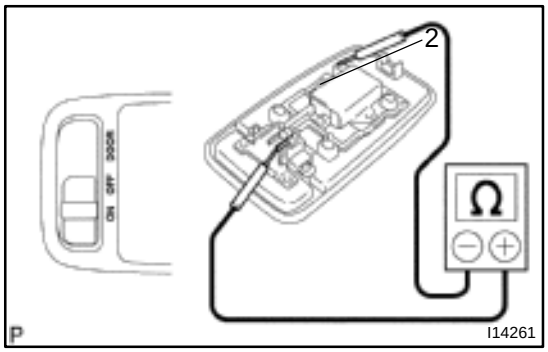

2. INSPECT INTERIOR LIGHT CONTINUITY

(a) Disconnect the connector from the room light.

(b) Turn the room light switch ON, check that continuity exists between terminal 1 and body ground.

If continuity is not as specified, replace the light assembly or bulb.

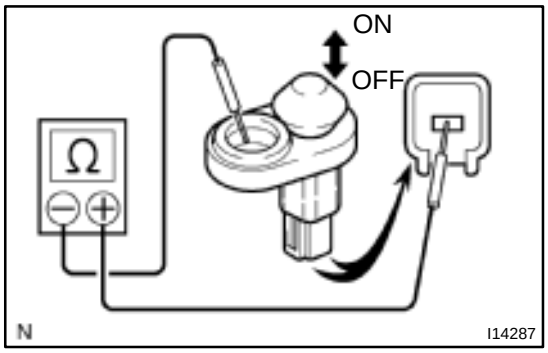

3. INSPECT DOOR COURTESY SWITCH CONTINUITY

(a) Check that continuity exists between terminals and the switch body with the switch ON (Switch pin released: opened door).

(b) Check that no continuity exists between terminals and the switch body with the switch OFF (Switch pin pushed in: closed door).

If operation is not as specified, replace the switch.

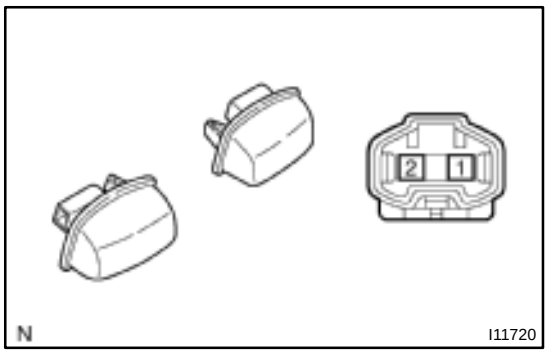

4. INSPECT LICENCE PLATE LIGHT CONTINUITY

Using an ohmmeter, check that continuity exists between terminals.

If continuity is not as specified, replace the light assembly or bulb.

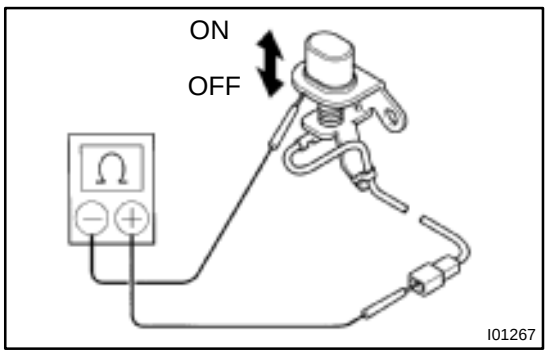

5. INSPECT LUGGAGE COMPARTMENT DOOR COURTESY SWITCH CONTINUITY

(a) Check that continuity exists between terminals and the switch body with the switch ON (Switch pin released: opened door).

(b) Check that no continuity exists between terminals and the switch body with the switch OFF (Switch pin pushed in: closed door).

If operation is not as specified, replace the switch.

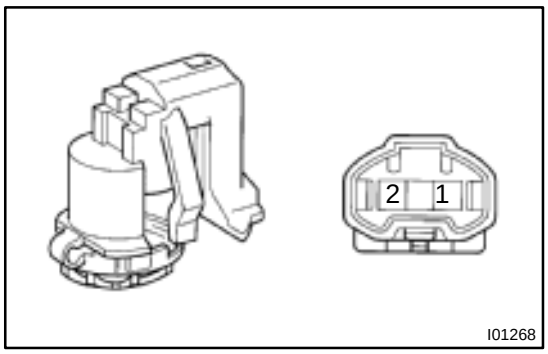

6. INSPECT LUGGAGE COMPARTMENT LIGHT CONTINUITY

Using an ohmmeter, check that continuity exists between terminals.

If continuity is not as specified, replace the light assembly or bulb.

BE1V1–01

INSPECTION

1. INSPECT FRONT WIPER AND WASHER SWITCH CONTINUITY

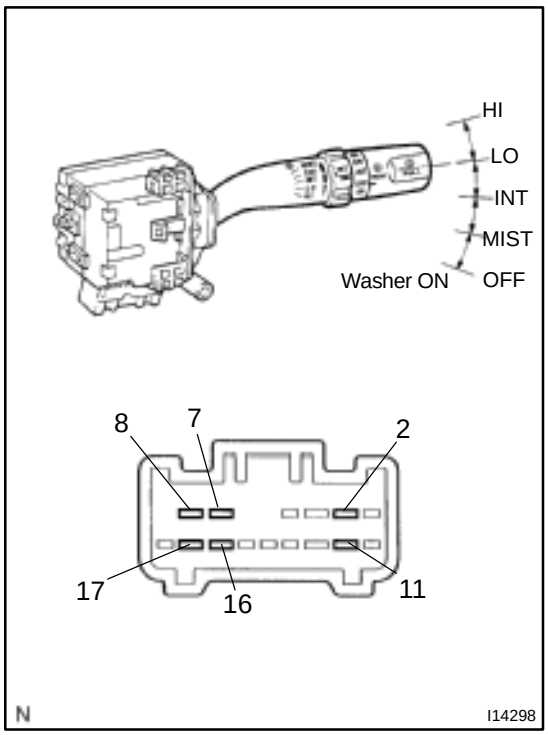

Switch position	Tester connection	Specified condition
OFF	7 – 16	Continuity
INT	7 – 16	Continuity
LO	7 – 17	Continuity
HI	8 – 17	Continuity
Washer ON	2 – 11	Continuity

If continuity is not as specified, replace the switch.

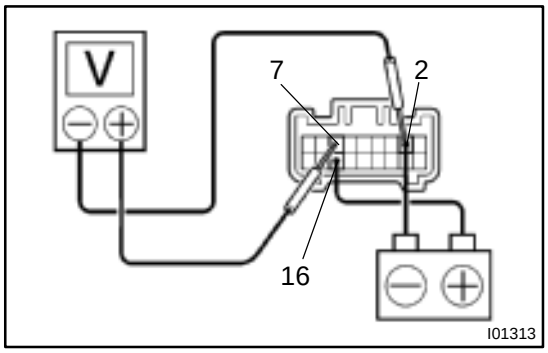

2. INSPECT FRONT WIPER INTERMITTENT OPERATION

(a) Turn the wiper switch to INT position.

(b) Turn the intermittent time control switch to FAST position.

(c) Connect the positive (+) lead from the battery to terminal 16 and the negative (–) lead to terminal 2.

(d) Connect the positive (+) lead from the voltmeter to terminal 7 and the negative (–) lead to terminal 2, check that the meter needle indicates battery voltage.

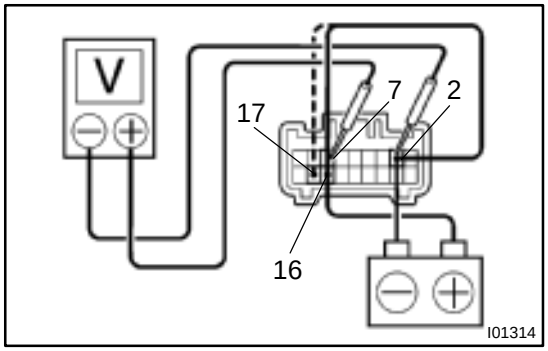

(e) After connecting terminal 16 to terminal 17, connect to terminal 2 to terminal 17, check the voltage rises from 0 volts to battery voltage with in the times, as shown in the table.

INT time control switch position	**Voltage**
FAST	Approx. 1 ~ 3 sec. Battery voltage 0 Volt
SLOW	Approx. 10 ~ 15 secs. Battery voltage 0 Volt

If operation is not as specified, replace the wiper and washer switch.

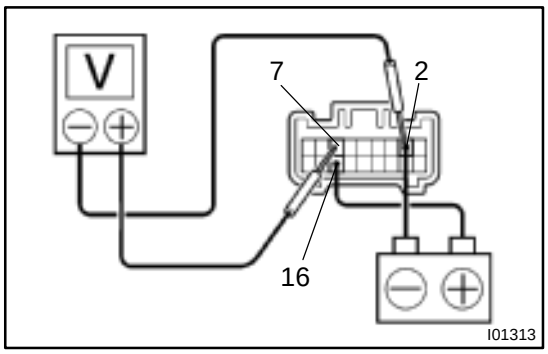

3. INSPECT FRONT WASHER LINKED OPERATION

(a) Connect the positive (+) lead from the battery to terminal 16 and the negative (–) lead to terminal 2.

(b) Connect the positive (+) lead from the voltmeter to terminal 7 and the negative (–) lead to terminal 2.

(c) Push in the washer switch, and check that the voltage changes, as shown in the table.

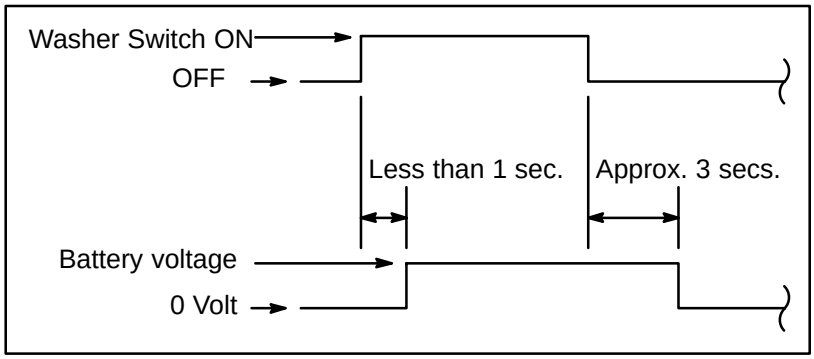

If operation is not as specified, replace the wiper and washer switch.

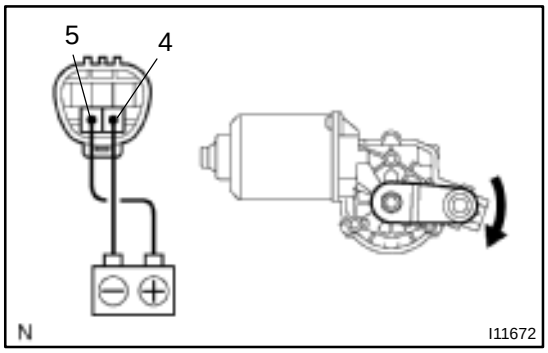

4. Low Speed:
INSPECT FRONT WIPER MOTOR OPERATION

Connect the positive (+) lead from the battery to terminal 5 and the negative (–) lead to terminal 4, check that the motor operates at low speed.

If operation is not as specified, replace the motor.

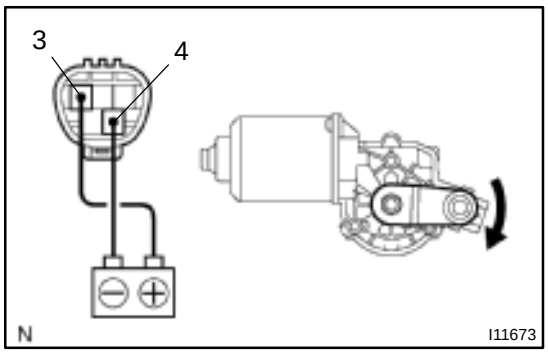

5. High Speed:
INSPECT FRONT WIPER MOTOR OPERATION

Connect the positive (+) lead from the battery to terminal 3 and the negative (–) lead to terminal 4, check that the motor operates at high speed.

If operation is not as specified, replace the motor.

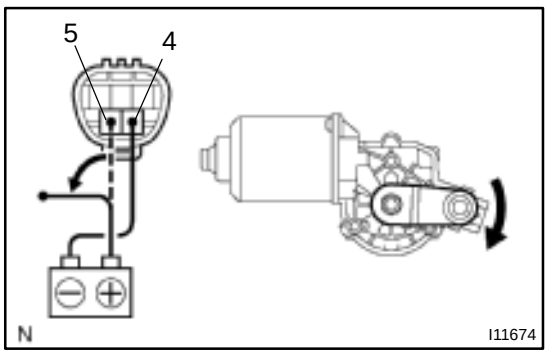

6. Stopping at Stop Position:
INSPECT FRONT WIPER MOTOR OPERATION

(a) Operate the motor at low speed and stop the motor operation anywhere except at the stop position by disconnecting positive (+) lead from terminal 5.

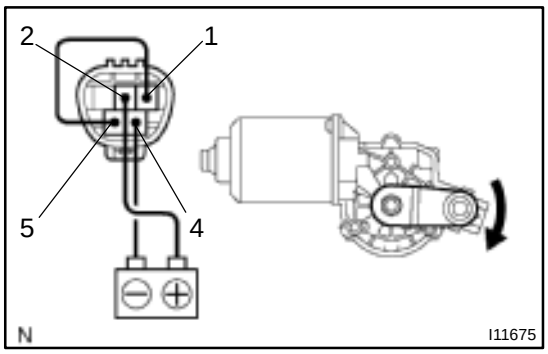

(b) Connect terminals 1 and 5.
(c) Connect the positive (+) lead from the battery to terminal 2 and negative (–) lead to terminal 4, check that the motor stops running at the stop position after the motor operates again.

If operation is not as specified, replace the motor.

COMBINATION METER

LOCATION

BE1VS–02

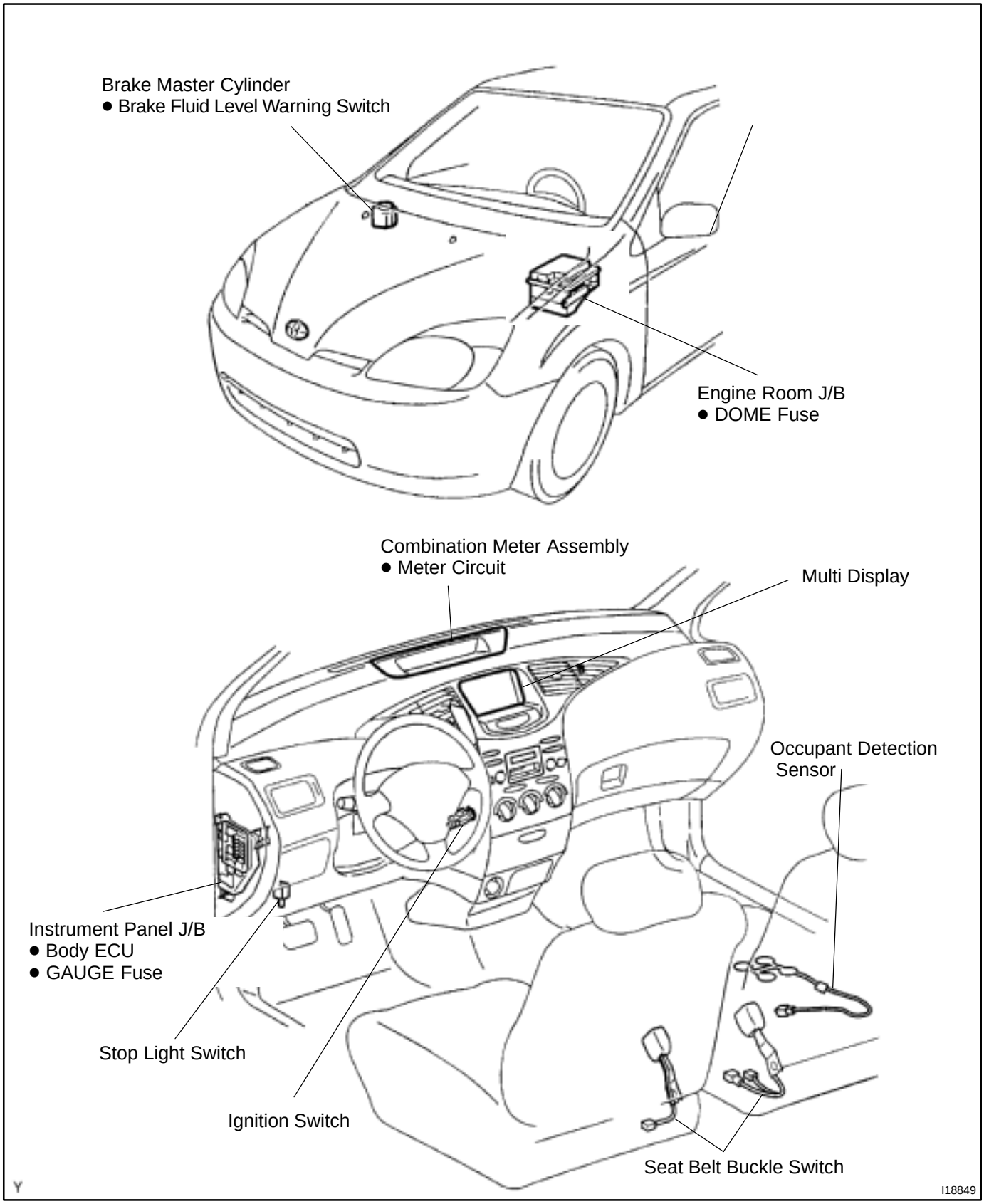

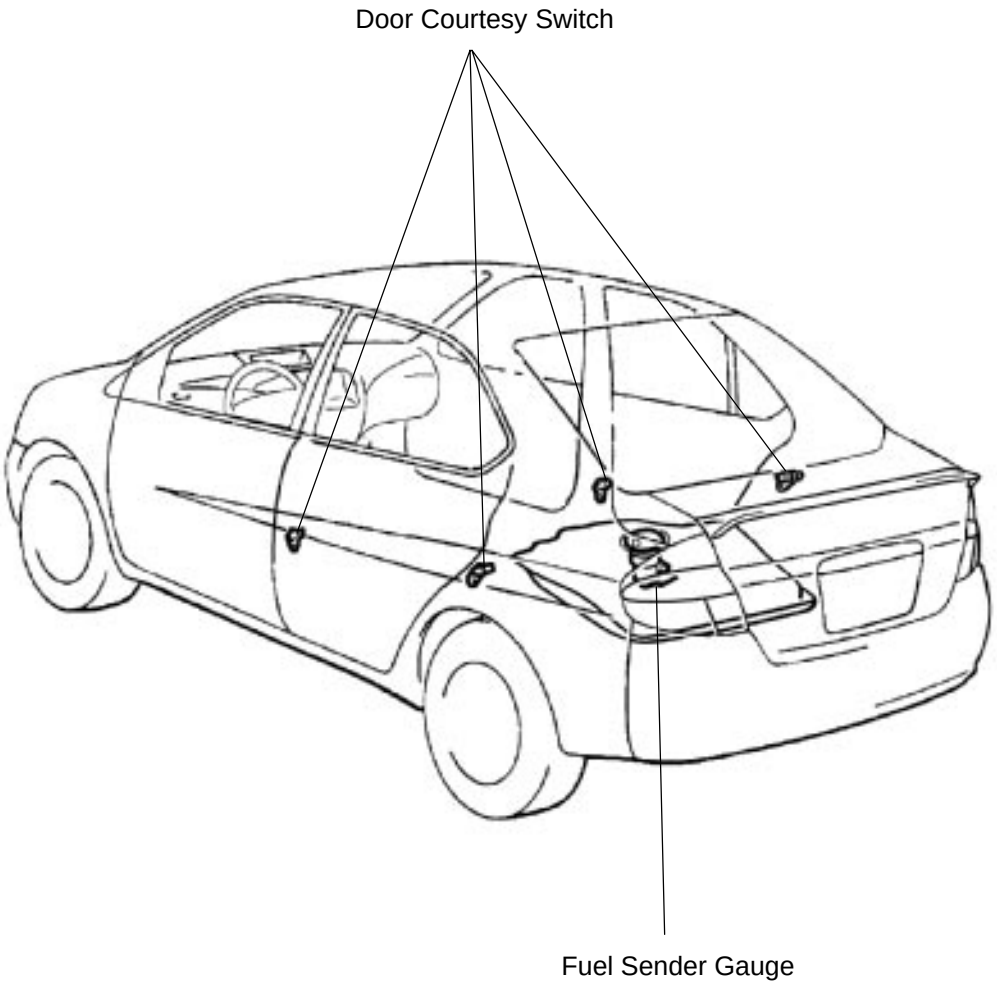

Y

I17784

BE1VT–02

CIRCUIT

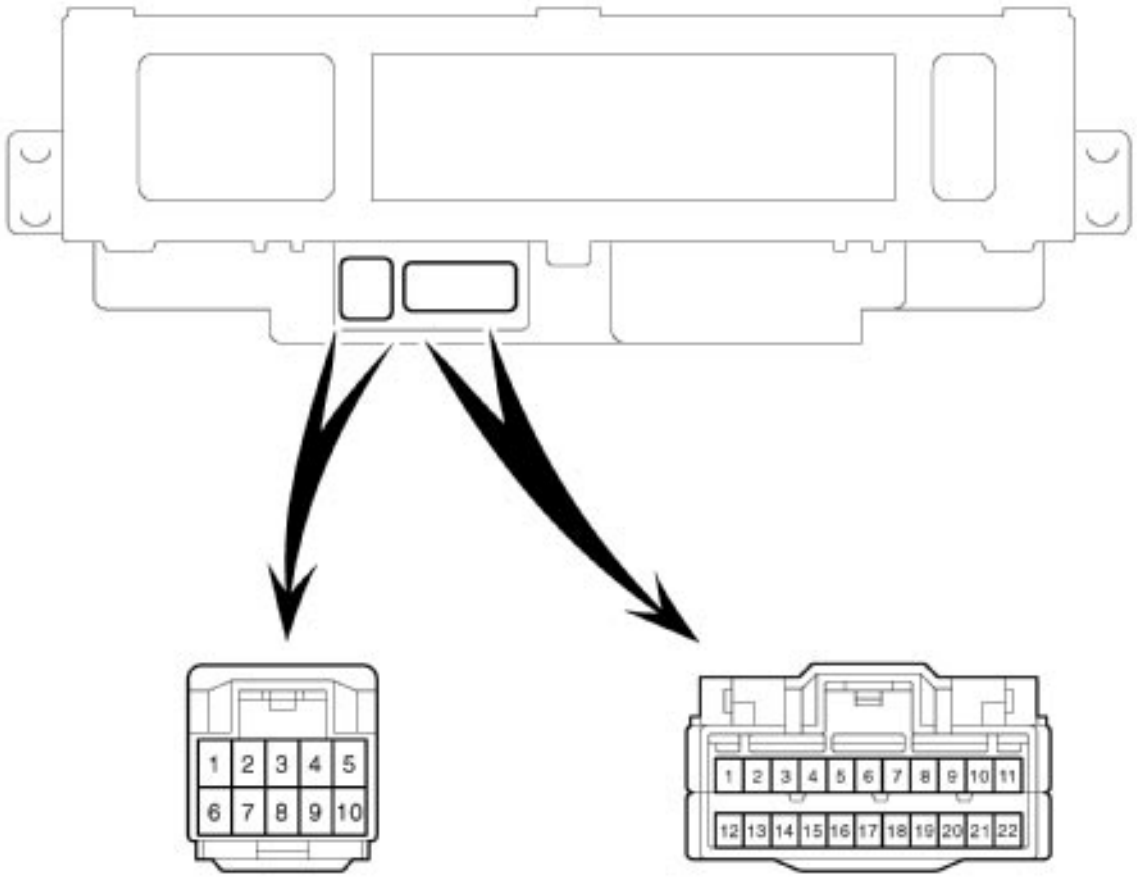

Connector ”B”

Connector ”A”

N

I19092

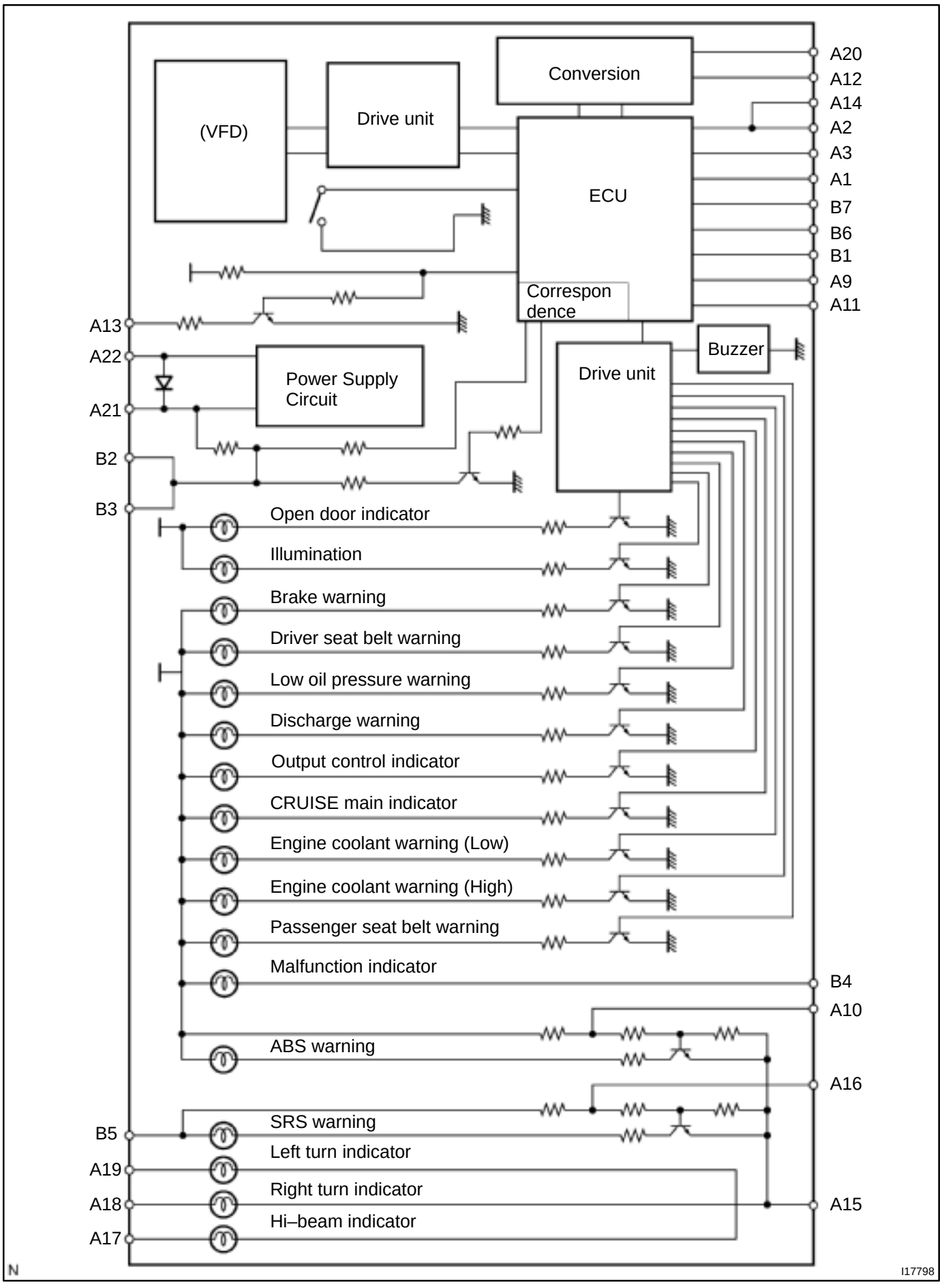
(VFD)
Drive unit
Conversion
ECU
Correspon dence
Power Supply Circuit
Drive unit
Buzzer
A20
A12
A14
A2
A3
A1
B7
B6
B1
A9
A11
A13
A22
A21
B2
B3
Open door indicator
Illumination
Brake warning
Driver seat belt warning
Low oil pressure warning
Discharge warning
Output control indicator
CRUISE main indicator
Engine coolant warning (Low)
Engine coolant warning (High)
Passenger seat belt warning
Malfunction indicator
B4
A10
ABS warning
A16
SRS warning
B5
Left turn indicator
A19
Right turn indicator
A18
A15
Hi–beam indicator
A17
N
I17798

No.		Wiring connector side
A	1	ODO/TRIP switch (TC)
	2	ODO/TRIP switch (E)
	3	ODO/TRIP switch (ODO)
	9	ABS ECU (SI)
	10	ABS ECU (ABS)
	11	EMPS ECU
	12	Fuel tank temperature (+)
	13	Hybrid vehicle control ECU (4P)
	14	Ground
	15	Ground
	16	Center airbag sensor assembly
	17	Headlight dimmer switch
	18	Turn signal switch (Right)
	19	Turn signal switch (Left)
	20	Fuel tank temperature (–)
	21	DOME Fuse
	22	GAUGE Fuse
B	1	Back–up light relay
	2	Body ECU
	3	Body ECU
	4	Engine ECM
	5	ACC Fuse
	6	Light control rheostat (TC)
	7	Light control rheostat (TR)

BE1VU–02

INSPECTION

1. INSPECT COMBINATION METER CIRCUIT

Disconnect connector ”A” and ”B” from the combination meter and inspect the connectors on the wire harness side as shown in the table.

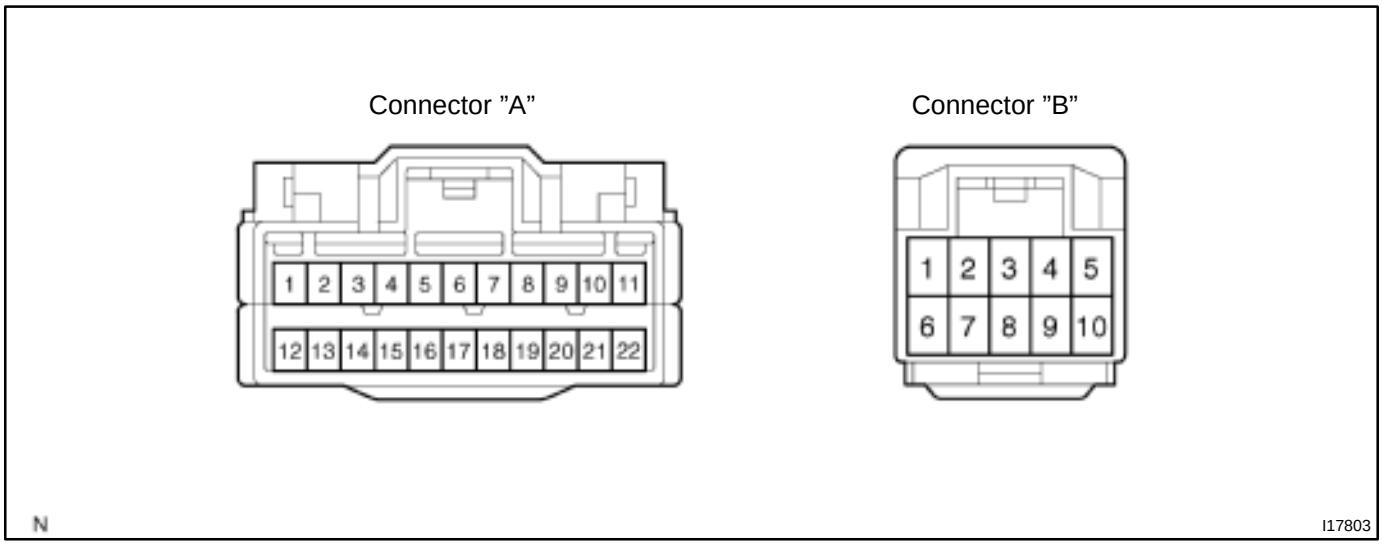

Tester connection	Condition	Specified condition
A1 – Ground (ILL – Body ground)	Ignition switch ON and tail cancel switch ON or OFF	Below 1V or 4.5 – 5.5 V
A2 – Ground (E – Body ground)	Constant	Continuity
A3 – Ground (OPO – Body ground)	Ignition switch ON and trip reset switch ON or OFF	Below 1V or 4.5 – 5.5 V
A9 – Ground (SI – Body ground)	Ignition switch ON and slowly turn drive wheel	Below 1V or 10 – 14 V
A10 – Ground (LP – Body ground)	Ignition switch ON and ABS indicator ON or OFF	Below 1V or 10 – 14 V
A11 – Ground (L – Body ground)	Ignition switch ON	Pulse generation
A13 – Ground (+S – Body ground)	Ignition switch ON and slowly turn drive wheel	Below 1V or 10 – 14 V
		Below 1V or 4.5 – 5.5 V
A14 – Ground (ES – Body ground)	Constant	Continuity
A15 – Ground (EP – Body ground)	Constant	Continuity
A16 – Ground (SW – Body ground)	Ignition switch ON and air bag indicator light ON or OFF	Below 1V or 10 – 14 V
A17 – Ground (S – Body ground)	Headlight dimmer switch Hi or Low	Below 1V or 10 – 14 V
A18 – Ground (B – Body ground)	Ignition switch ON and turn signal switch right	Below 1V or 10 – 14 V
A19 – Ground (B – Body ground)	Ignition switch ON and turn signal switch left	Below 1V or 10 – 14 V
A21 – Ground (B – Body ground)	Constant	10 – 14 V

A22 – Ground (IG – Body ground)	Ignition switch OFF or ON	Below 1V or 10 – 14 V
B1 – Ground (ROUT – Body ground)	Ignition switch ON and shift lever position is ”R” or except ”R”	Below 1V or 10 – 14 V
B2 – Ground (MPX+ – Body ground)	Ignition switch ON	Pulse generation
B3 – Ground (MPX – Body ground)	Ignition switch ON	Pulse generation
B5 – Ground (ACC – Body ground)	Ignition switch ACC	10 – 14 V

2. INSPECT SPEEDOMETER ON–VEHICLE

Using a speedometer tester, inspect the speedometer for allowable indication error and check the operation of the odometer.
HINT:
Tire wear and tire over or under inflation will increase the indication error.
If error is excessive, replace the speedometer.

(mph)		(km/h)	
Standard indication	Allowable range	Standard indication	Allowable range
20	18– 22	20	18 – 22
40	38 – 42	40	38 – 42
60	59 – 63	60	58 – 62
80	79 – 83	80	78 – 82
100	99 – 104	100	97 – 103
120	119 – 125	120	117 – 123
		140	137 – 143
		160	157 – 163

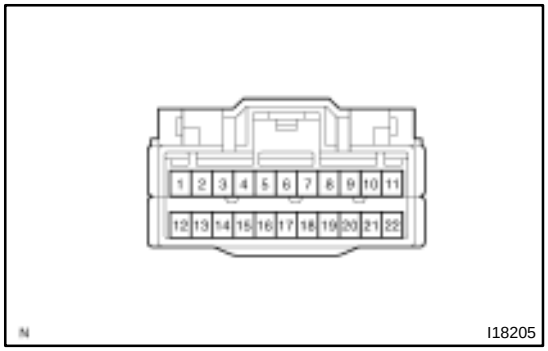

3. INSPECT INPUT SPEED SIGNAL

While driving the vehicle at 10 km/h, measure the voltage between connector terminals A9 and A14 of the combination meter.

Standard: Change between Hi and LO is repeated 7 time for 1 second.

HINT:
Check it the ignition switch ON and the connector connected.

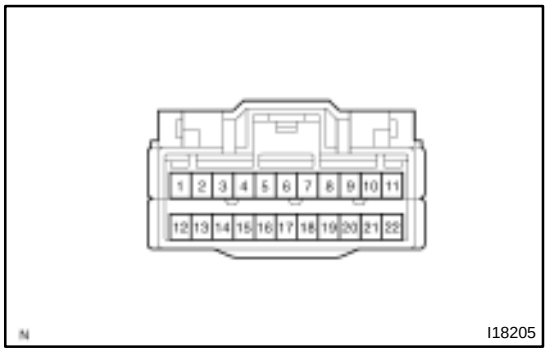

4. INSPECT OUTPUT SPEED SIGNAL

While driving the vehicle at 10 km/h, measure the voltage between connector terminal A13 and A14 of the combination meter.

Standard: Change between Hi and LO is repeated 7 time for 1 second.

HINT:
Check it the ignition switch ON and the connector connected.

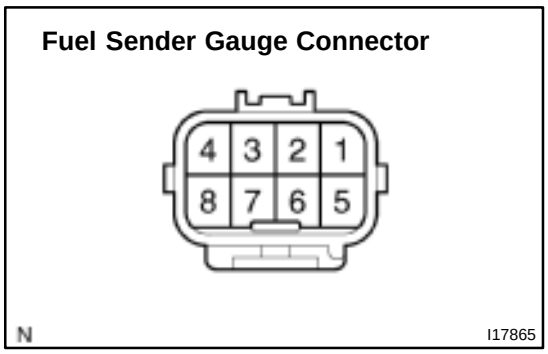

5. INSPECT FUEL SENDER GAUGE VOLTAGE

Measure the voltage between terminals 1 and 6 for each fuel level.

HINT:

The fuel sender gauge cannot be removed.

As the resistance value changes according to the remaining fuel amount, refer to the above standard value.

Fuel level	Resistance (Ω)
Full	Approx. 430
Half	Approx. 1000 – 2000
Empty	Approx. 5000

If resistance value is not as specified, replace the fuel tank.

If resistance value is as specified, replace the combination meter.

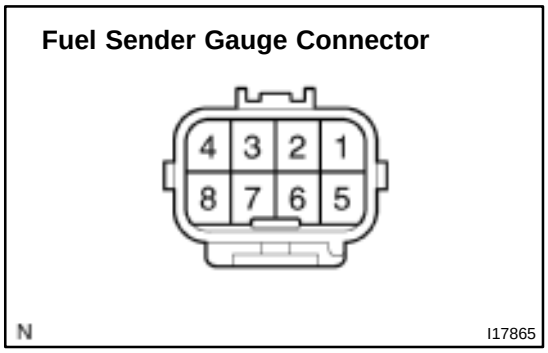

6. INSPECT TEMPERATURE SENDER RESISTANCE

Measure the resistance between terminal 4 and 8

If the resistance value is not in the following area, replace fuel tank.

1.5 – 100 (Ω) at 0 – 30˚C

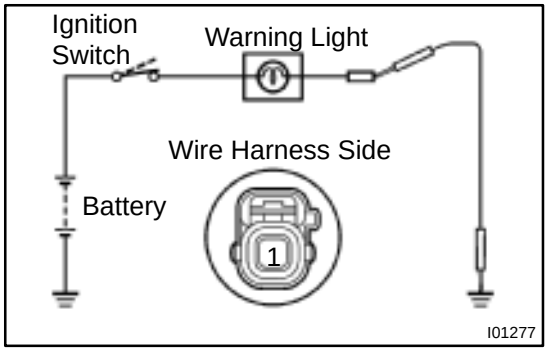

7. INSPECT LOW OIL PRESSURE WARNING LIGHT

(a) Disconnect the connector from the warning switch and ground terminal of the wire harness side connector.

(b) Turn the ignition switch ON, check that the warning light lights up.

If the warning light does not light up, test the bulb or inspect wire harness.

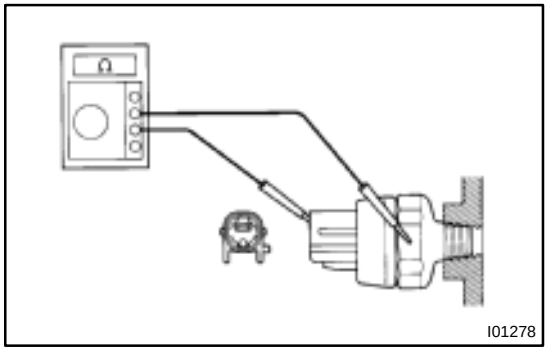

8. INSPECT LOW OIL PRESSURE SWITCH CONTINUITY

(a) Check that continuity exists between terminal and ground with the engine stopped.

(b) Check that no continuity exists between terminal and ground with the engine running.

HINT:

Oil pressure should be over 24.5 kPa (0.25 kgf/cm^2, 3.55 psi)

If operation is not as specified, replace the switch.

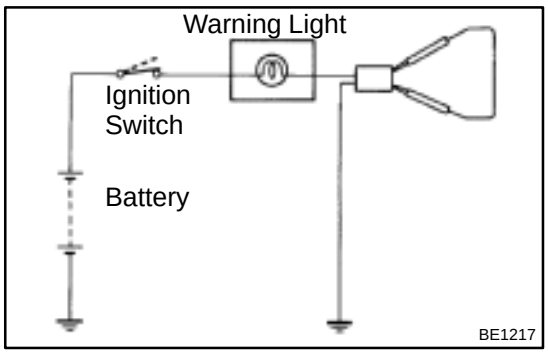

9. INSPECT BRAKE WARNING SYSTEM LIGHT

(a) Disconnect the connector from the brake fluid warning switch.
(b) Connect terminals of the wire harness side of the level warning switch connector.
(c) Start the engine, check that the warning light lights up.

If the warning light does not light up, test the bulb or wire harness.

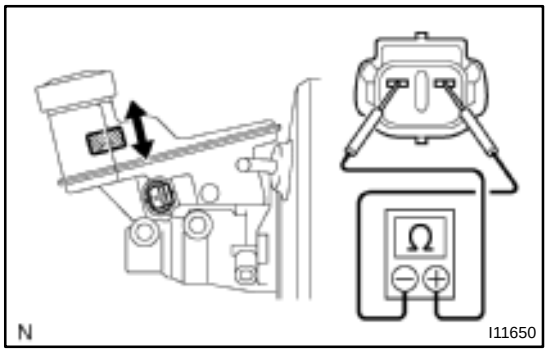

10. INSPECT BRAKE FLUID LEVEL WARNING SWITCH CONTINUITY

(a) Remove the reservoir tank cap and strainer.
(b) Disconnect the connector.
(c) Check that no continuity exists between terminals with the switch OFF (float up).
(d) Use syphon, etc. to take fluid out of the reservoir tank.
(e) Check that continuity exists between terminals with the switch ON (float down).
(f) Pour the fluid back in the reservoir tank.

If operation is not as specified, replace the switch.

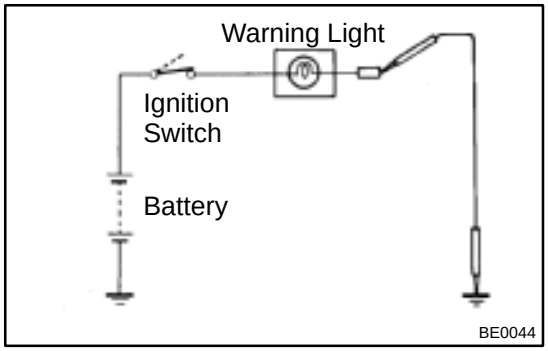

11. INSPECT PARKING BRAKE WARNING LIGHT

(a) Disconnect the connector from the parking brake switch.
(b) Ground terminal of the wire harness side connector.
(c) Start the engine, check that the warning light lights up.

If the warning light does not light up, test the bulb or inspect wire harness.

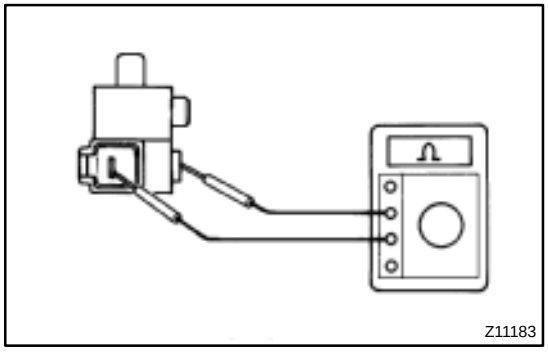

12. INSPECT PARKING BRAKE SWITCH CONTINUITY

(a) Check that continuity exists between terminal and switch body with the switch ON (switch pin released).
(b) Check that no continuity exists between terminal and switch body with the switch OFF (switch pin pushed in).

If operation is not as specified, replace the switch or inspect ground point.

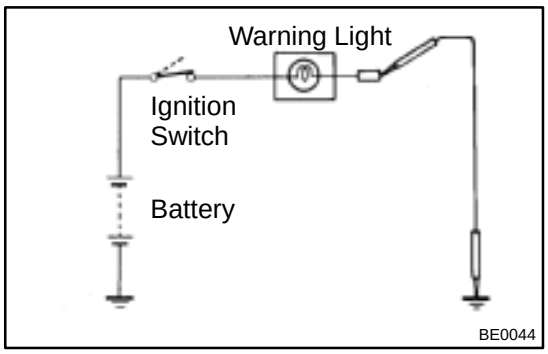

13. INSPECT OPEN DOOR WARNING LIGHT

Disconnect the connector from the door courtesy switch, and ground terminal 1 of the wire harness side connector and check that the warning light lights up.

If the warning light does not light up, inspect the bulb or wire harness.

BE1D5–03

INSPECTION

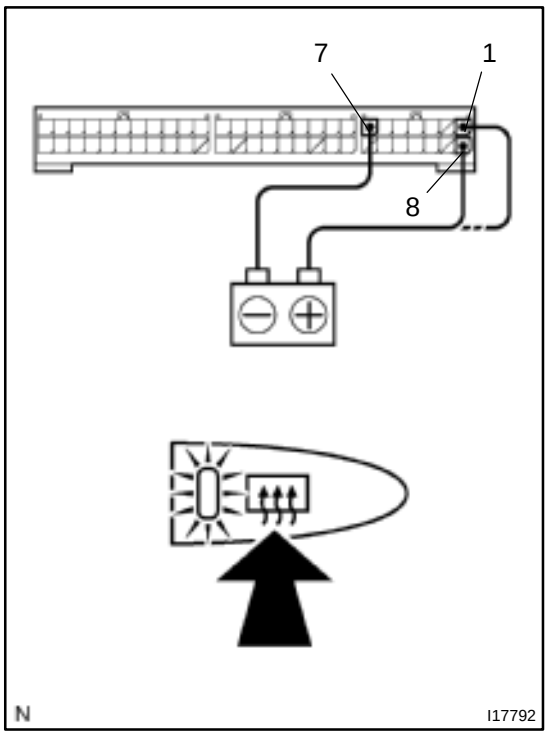

1. INSPECT DEFOGGER TIMER OPERATION

(a) Connect the positive (+) lead from the battery to terminal 1, 8 and negative (–) lead to terminal 7.

(b) Connect the positive (+) lead from the battery to terminal 5 through a 3.4 W test bulb.

(c) Turn the defogger switch ON and check that the indicator light and test bulb light up for 12 for 18 minutes, then the indicator light and test bulb lights go out.

If operation is not as specified, inspect the A/C amplifier.

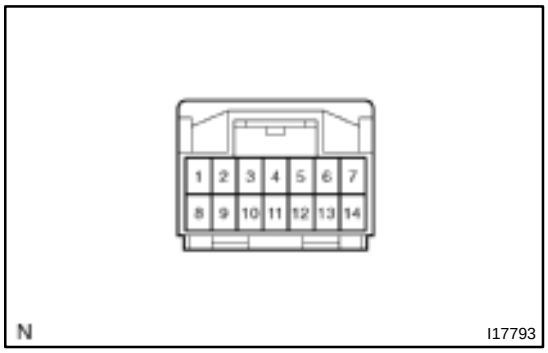

2. INSPECT DEFOGGER SWITCH CIRCUIT

Connector disconnected:

Disconnect the connector from the switch and inspect the connector on wire harness side, as shown in the chart.

Tester connection	Condition	Specified condition
1 – Ground	Ignition switch LOCK or ACC	No voltage
1 – Ground	Ignition switch ON	Battery positive voltage
7 – Ground	Constant	Continuity
8 – Ground	Constant	Battery positive voltage

If the circuit is not as specified, replace the switch.

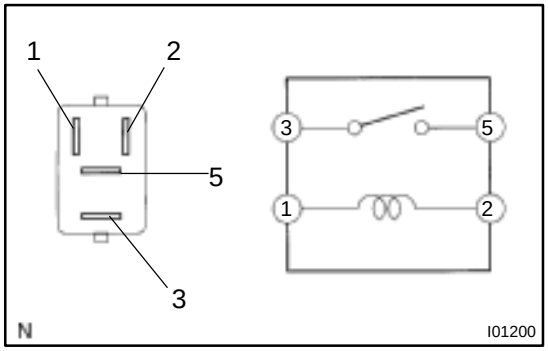

3. INSPECT DEFOGGER RELAY CONTINUITY

Condition	Tester connection	Specified condition
Constant	1 – 2	Continuity
Apply B+ between terminals 1 and 2.	3 – 5	Continuity

If continuity is not as specified, replace the relay.

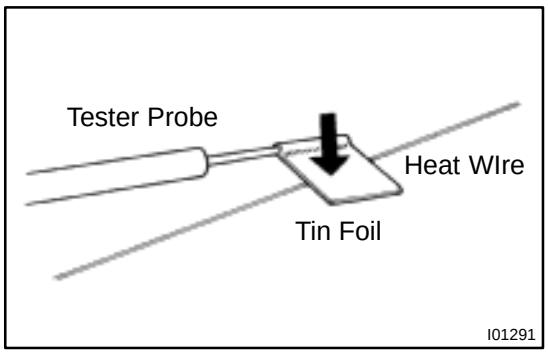

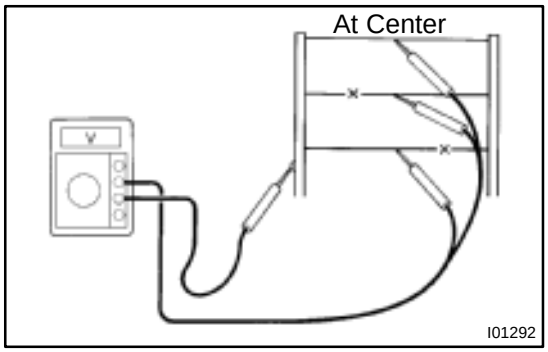

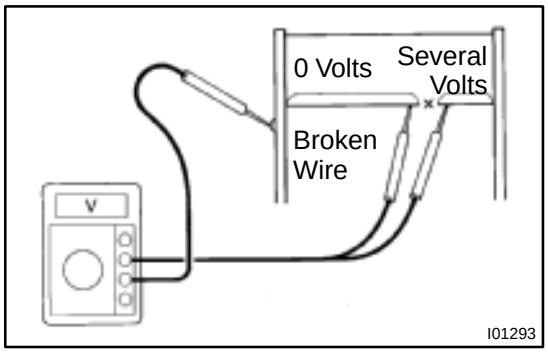

4. INSPECT DEFOGGER WIRE

NOTICE:

- **When cleaning the glass, use a soft, dry cloth, and wipe the glass in the direction of the wire. Take care not to damage the wires.**
- **Do not use detergents or glass cleaners with abrasive ingredients.**
- **When measuring voltage, wind a piece of tin foil around the top of the negative probe and press the foil against the wire with your finger, as shown.**

(a) Turn the ignition switch ON.

(b) Turn the defogger switch ON.

(c) Inspect the voltage at the center of each heat wire, as shown.

Voltage	Criteria
Approx. 5V	Okay (No break in wire)
Approx. 10V or 0V	Broken wire

HINT:

If there is approximately 10 V, the wire is broken between the center of the wire and the positive (+) end. If there is no voltage, the wire is broken between the center of the wire and ground.

(d) Place the voltmeter positive (+) lead against the defogger positive (+) terminal.

(e) Place the voltmeter negative (–) lead with the foil strip against the heat wire at the positive (+) terminal end and slide it toward the negative (–) terminal end.

(f) The point where the voltmeter deflects from zero to several V is the place where the heat wire is broken.

HINT:

If the heat wire is not broken, the voltmeter indicates 0 V at the positive (+) end of the heat wire but gradually increases to about 12 V as the meter probe is moved to the other end.

BE1V2–01

POWER WINDOW CONTROL SYSTEM

TROUBLESHOOTING

Power WIndow Master Switch

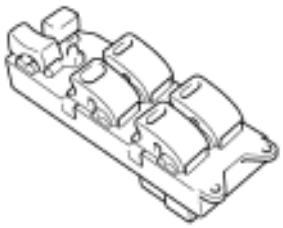

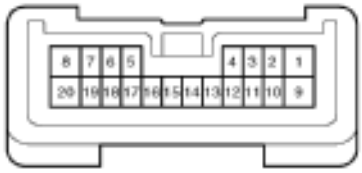

I17845

1	**One touch power window does not move up and down.**

After turning the ignition switch ON and power window master switch UP or DOWN on the drivers side, check that the master switch AUTO light blinks.

• Error is classified into the following 3 types according to the way of blinking.

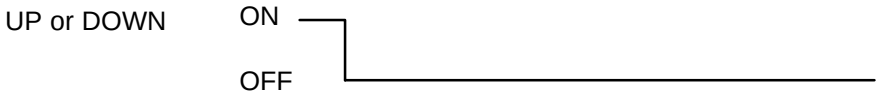

① Limit switch error

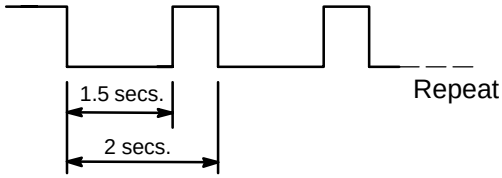

② Pulse sensor error

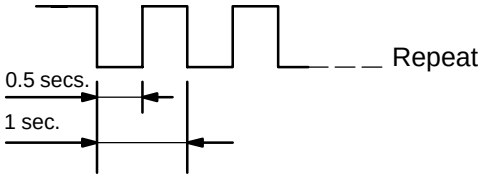

③ Limit switch/Pulse sensor synchronize error

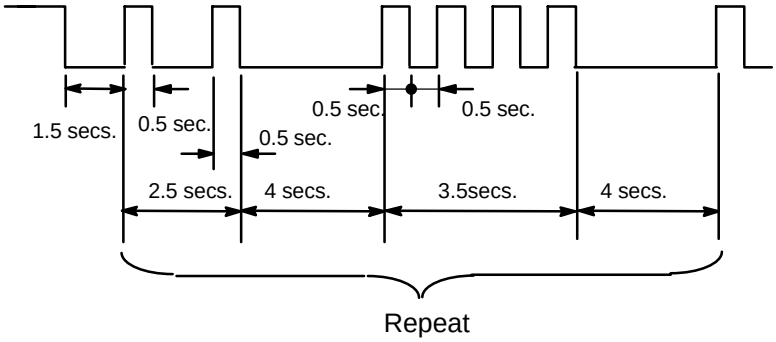

< Reference > • When the ignition switch is turned OFF after the AUTO light starts blinking, the blinking will stop 43 sec. later.
• When the ignition switch is turned ON after that, the AUTO light will start blinking again.

Blinks in the ① way

Remove the master switch.
(Connector connection condition)

CONTINUED ON NEXT PAGE

No

Master switch defective

Blinks in the ②or ③way

CONTINUED ON NEXT PAGE

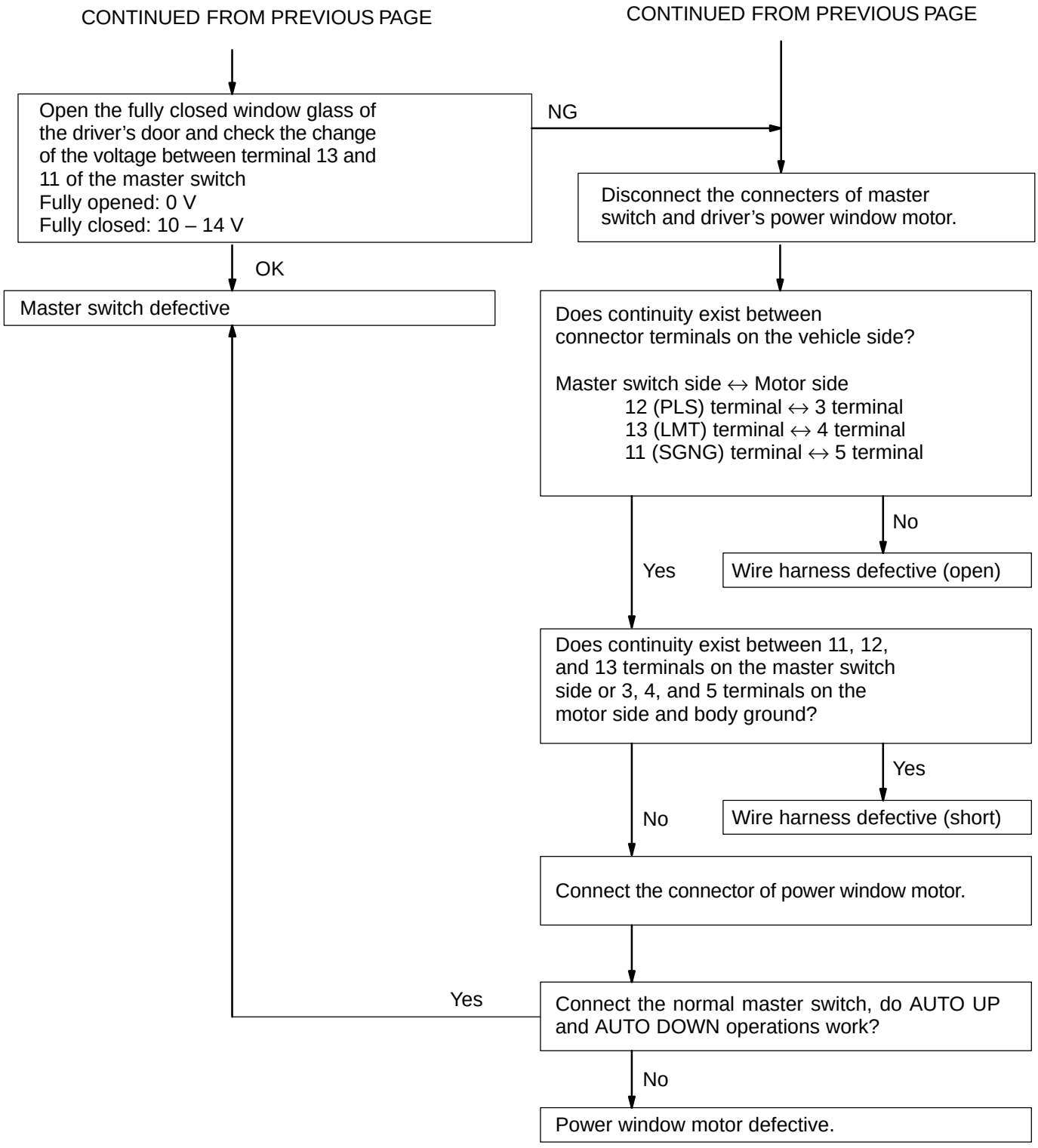
CONTINUED FROM PREVIOUS PAGE
CONTINUED FROM PREVIOUS PAGE
Open the fully closed window glass of the driver's door and check the change of the voltage between terminal 13 and 11 of the master switch
Fully opened: 0 V
Fully closed: 10 – 14 V
NG
Disconnect the connecters of master switch and driver's power window motor.
OK
Master switch defective
Does continuity exist between connector terminals on the vehicle side?
Master switch side ↔ Motor side
12 (PLS) terminal ↔ 3 terminal
13 (LMT) terminal ↔ 4 terminal
11 (SGNG) terminal ↔ 5 terminal
No
Yes
Wire harness defective (open)
Does continuity exist between 11, 12, and 13 terminals on the master switch side or 3, 4, and 5 terminals on the motor side and body ground?
Yes
No
Wire harness defective (short)
Connect the connector of power window motor.
Yes
Connect the normal master switch, do AUTO UP and AUTO DOWN operations work?
No
Power window motor defective.

2	During AUTO UP operation, the power window moves down.

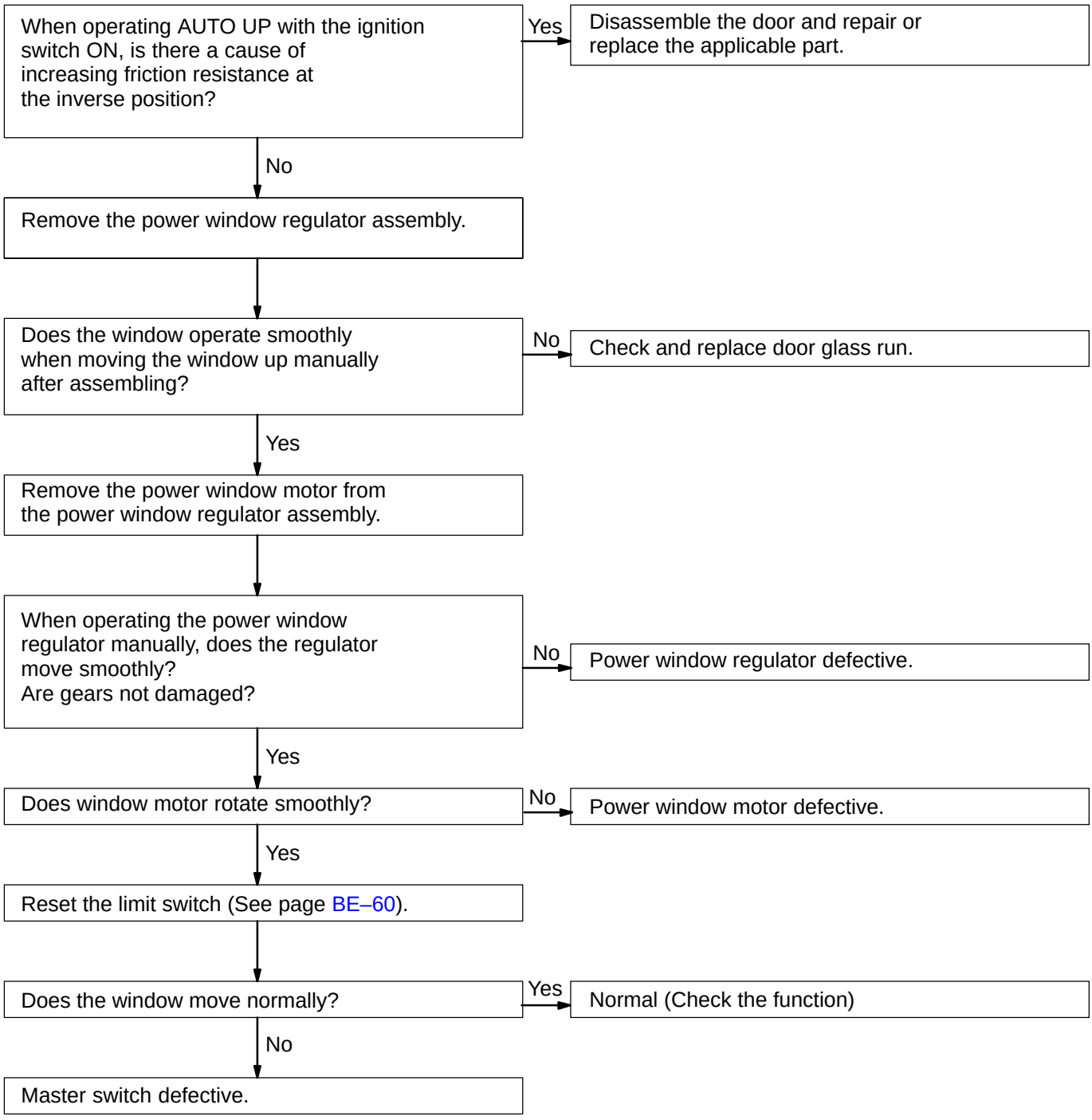

3	**The DOWN function does not work though some other objects are caught in the power window glass.**

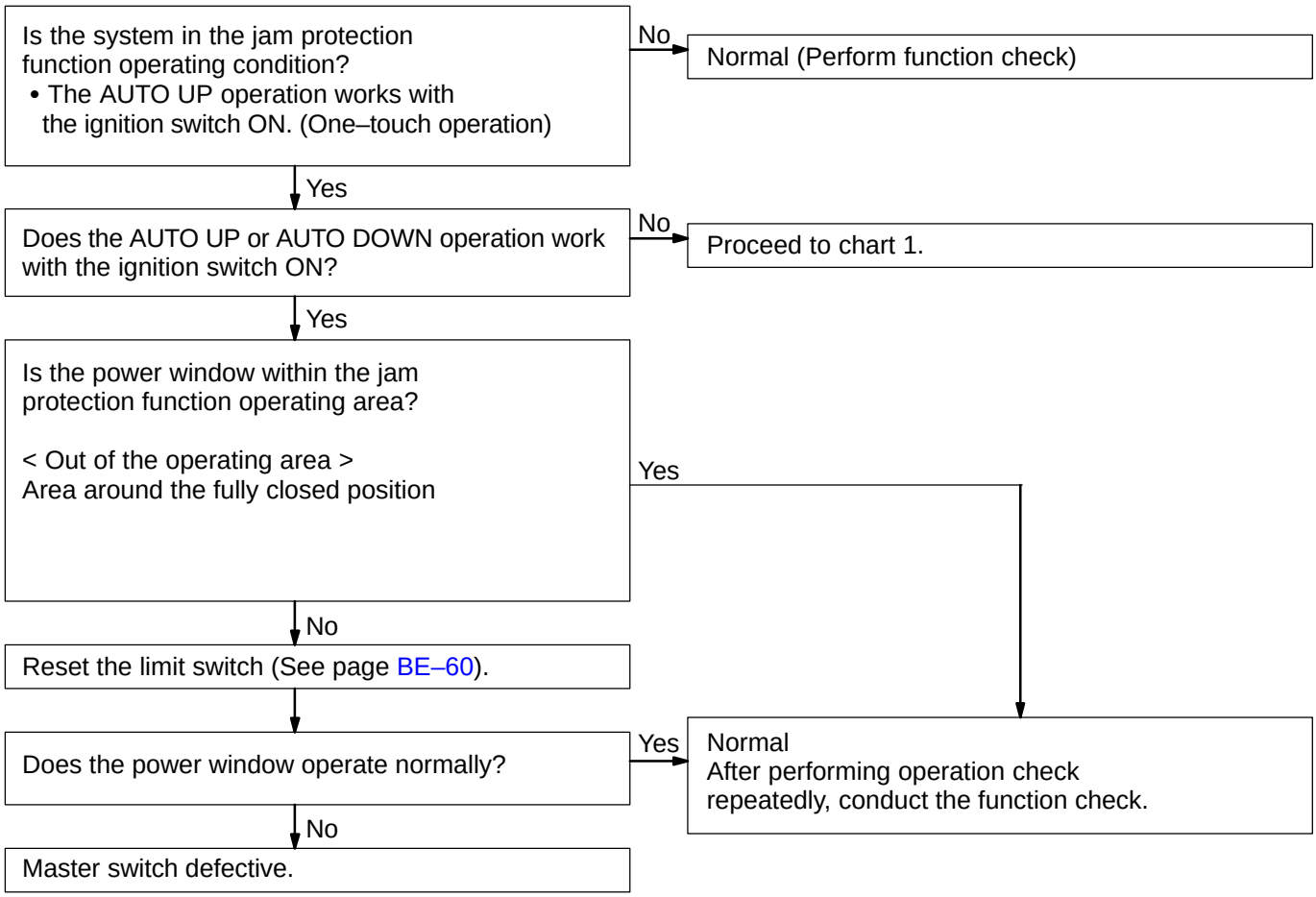

BE1V3–02

INSPECTION

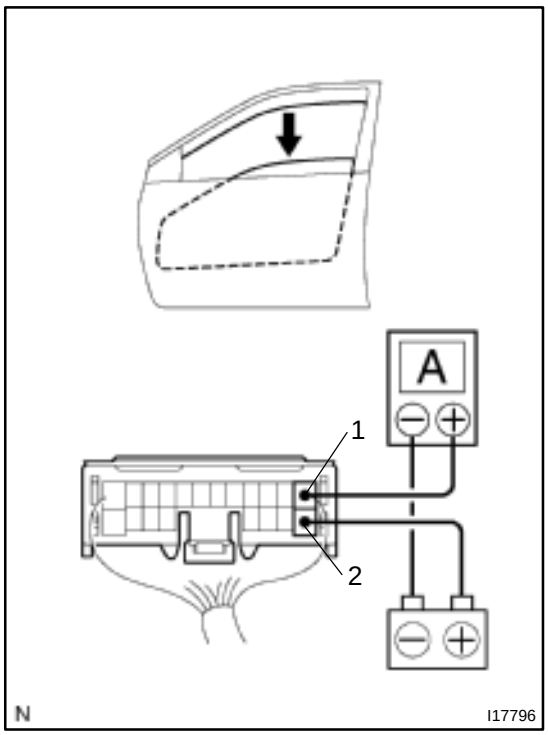

1. INSPECT ONE TOUCH POWER WINDOW SYSTEM/ CURRENT OF CIRCUIT (Using an ammeter)

(a) Disconnect the connector from the master switch.
(b) Connect the positive (+) lead from the ammeter to terminal 1 on the wire harness side connector and the negative (–) lead to negative (–) terminal of the battery.
(c) Connect the positive (+) lead from the battery to terminal 2 on the wire harness side connector.
(d) As the window goes down, check that the current flow is approximately 7 A.
(e) Check that the current increases up to approximately 14.5 A or more when the window stops going down.

HINT:
The PTC opens some 4 – 90 seconds after the window stops going down, so that check must be made before the PTC operates.
If the operation is as specified, replace the master switch.

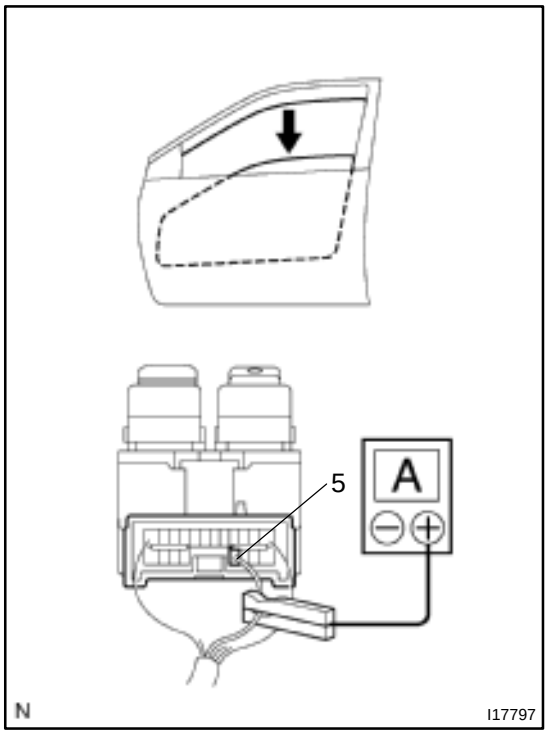

2. INSPECT ONE TOUCH POWER WINDOW SYSTEM/ CURRENT OF CIRCUIT (Using an ammeter with a current–measuring probe)

(a) Remove the driver door ECU with connectors connected.
(b) Attach a current–measuring probe to terminal 5 of the wire harness.
(c) Turn the ignition switch ON and set the power window switch in the down position.
(d) As the window goes down, check that the current flow is approximately 7 A.
(e) Check that the current increases up to approximately 14.5 A or more when the window stops going down.

HINT:
The PTC opens some 4 – 90 seconds after the window stops going down, so that check must be made before the PTC operates.
If operation is as specified, replace the driver door ECU.

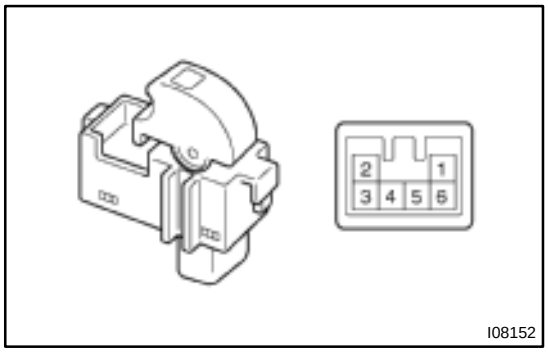

3. INSPECT POWER WINDOW SWITCH CONTINUITY

Switch position	Tester connection	Specified condition
UP	2 – 3, 4 – 5	Continuity
OFF	2 – 3 – 5	No continuity
DOWN	2 – 4, 3 – 5	Continuity

If continuity is not as specified, replace the switch.

4. INSPECT POWER WINDOW SWITCH CIRCUIT (See page DI–726)

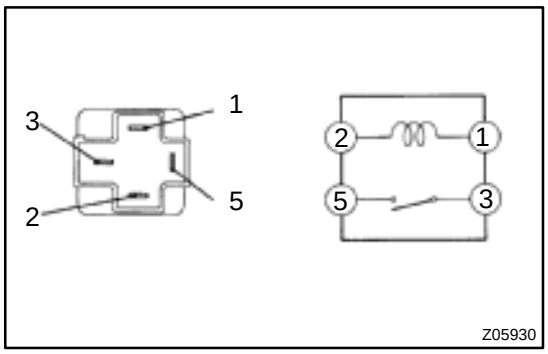

5. INSPECT POWER MAIN RELAY CONTINUITY

Condition	Tester connection	Specified condition
Constant	1 – 2	Continuity
Apply B+ between terminals 1 and 2.	3 – 5	Continuity

If continuity is not as specified, replace the relay.

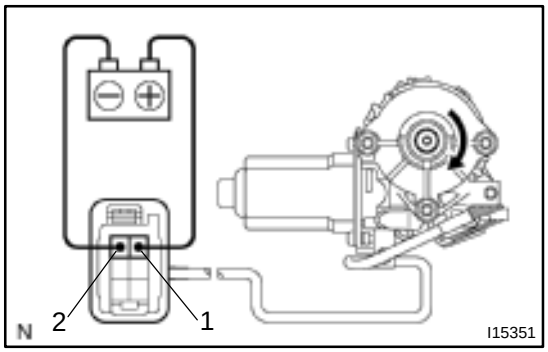

6. Driver's door: INSPECT POWER WINDOW MOTOR OPERATION

(a) Connect the positive (+) lead from the battery to terminal 1 and the negative (–) lead to terminal 2, check that the motor turns clockwise.

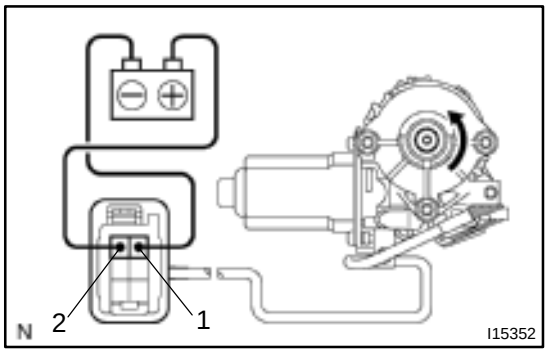

(b) Reverse the polarity, check that the motor turns counter-clockwise.

If operation is not as specified, replace the motor.

NOTICE:

Since the jam protection may not work properly be sure to conduct procedures described in "HOW TO RESET POWER MOTOR (RESET AND PULSE SWITCH)" after this inspection.

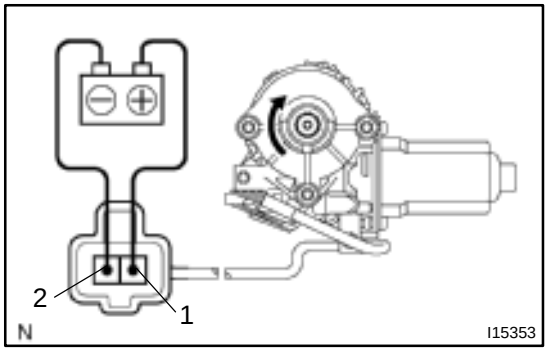

7. Passenger's door and rear right door: INSPECT POWER WINDOW MOTOR OPERATION

(a) Connect the positive (+) lead from the battery to terminal 1 and the negative (–) lead to terminal 2, check that the motor turns clockwise.

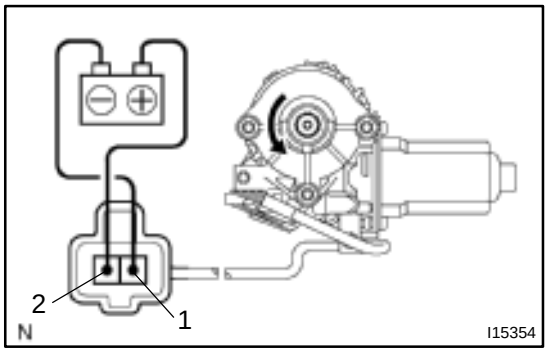

(b) Reverse the polarity, check that the motor turns counter-clockwise.

If operation is not as specified, replace the motor.

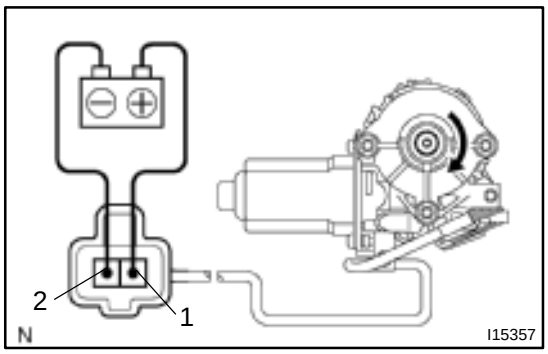

8. Rear left door:
INSPECT POWER WINDOW MOTOR OPERATION

(a) Connect the positive (+) lead from the battery to terminal 1 and the negative (–) lead to terminal 2, check that the motor turns clockwise.

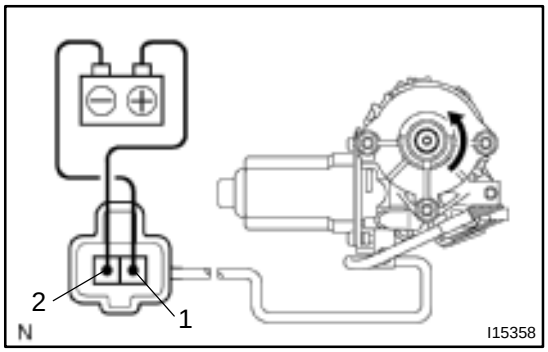

(b) Reverse the polarity, check that the motor turns counter-clockwise.

If operation is not as specified, replace the motor.

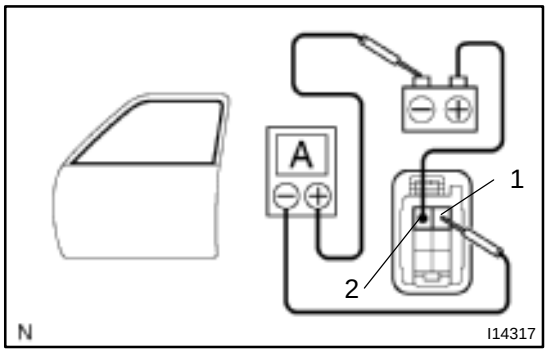

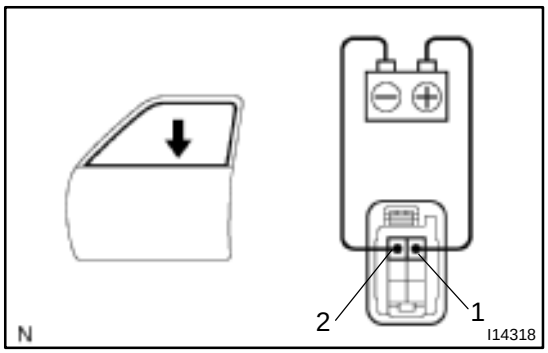

9. Driver's door:
INSPECT PTC OPERATION

(a) Disconnect the connector from the window motor.
(b) Connect the positive (+) lead from the ammeter to terminal 1 of the wire harness side connector and the negative (–) lead to negative terminal of the battery.
(c) Connect the positive (+) lead from the battery to terminal 2 of the wire harness side connector, and raise the window to the fully closed position.
(d) Continue to apply voltage, check that the current changes from approximately 14 A to less than 1 A within 4 to 90 seconds.
(e) Disconnect the leads from terminals.
(f) Approximately 90 seconds later, connect the positive (+) lead from the battery to terminal 1 and negative (–) lead to terminal 2, check that the window begins to descend.

If operation is not as specified, replace the motor.

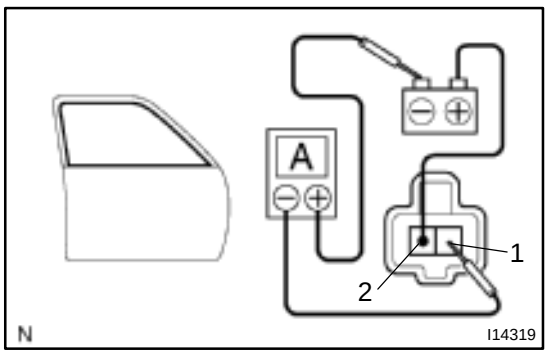

10. Except driver's door:
INSPECT PTC OPERATION

(a) Disconnect the connector from the power window switch.
(b) Connect the positive (+) lead from the ammeter to terminal 1 of the wire harness side connector and the negative (–) lead to negative terminal of the battery.
(c) Connect the positive (+) lead from the battery to terminal 2 of the wire harness side connector, and raise the window to the fully closed position.

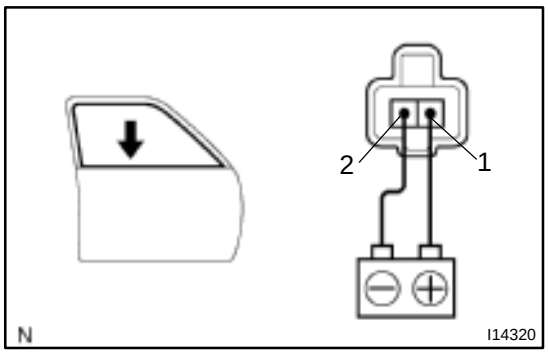

(d) Continue to apply voltage, check that the current changes from approximately 14 A to less than 1 A within 4 to 90 seconds.
(e) Disconnect the leads from terminals.
(f) Approximately 90 seconds later, connect the positive (+) lead from the battery to terminal 1 and the negative (–) lead to terminal 2, check that the window begins to descend.

If operation is not as specified, replace the motor.

11. INSPECT JAM PROTECTION FUNCTION

NOTICE:

Never, ever be caught any part of your body when checking.

HINT:

In case of performing resetting of the limit switch, do checking after repeating up and down of the glass with automatic operation.

(a) Confirmation of AUTO up operation:
Confirm that the window will be fully close with AUTO up operation.
(b) Checking of the operation of the jam protection function:
(1) Move up the window with AUTO up operation and check that the window will go down when it touches the handle of the hammer stetted.
(2) Confirm that the window will then stop going down about 200 mm.

HINT:

In case of removing the glass, glass guide, regulator and etc. be sure to perform checking of the jam protection function.

If the jam protection is not function properly, adjust power window motor reset switch and pulse switch.

BE1W7–01

INSPECTION

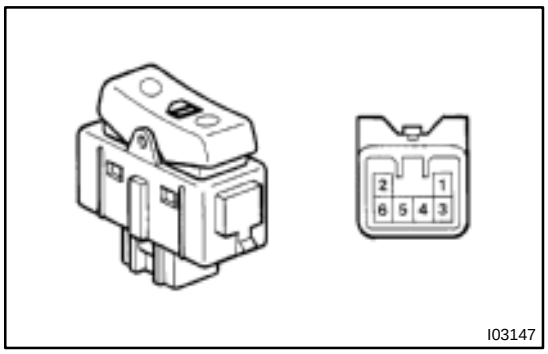

1. INSPECT DOOR LOCK CONTROL SWITCH CONTINUITY

Switch position	Tester connection	Specified condition
LOCK	3 – 6	Continuity
OFF	–	No continuity
UNLOCK	3 – 5	Continuity

If continuity is not as specified, replace the switch.

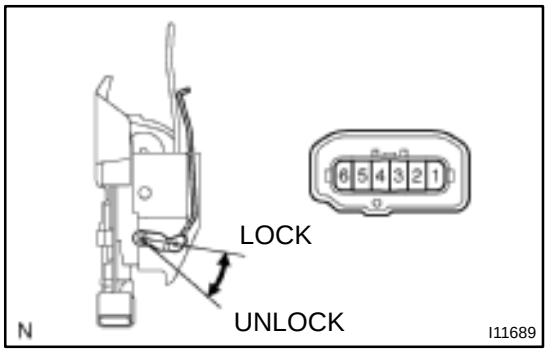

2. Driver's door:
INSPECT DOOR KEY LOCK AND UNLOCK SWITCH CONTINUITY

Switch position	Tester connection	Specified condition
LOCK	3 – 5	Continuity
OFF	–	No continuity
UNLOCK	3 – 6	Continuity

If continuity is not as specified, replace the switch.

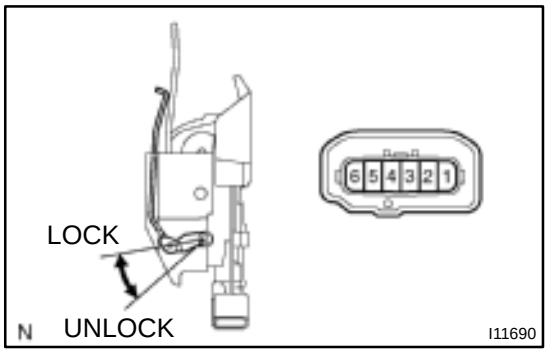

3. Passenger's door:
INSPECT DOOR KEY LOCK AND UNLOCK SWITCH CONTINUITY

Switch position	Tester connection	Specified condition
LOCK	2 – 4	Continuity
OFF	–	No continuity
UNLOCK	1 – 4	Continuity

If continuity is not as specified, replace the switch.

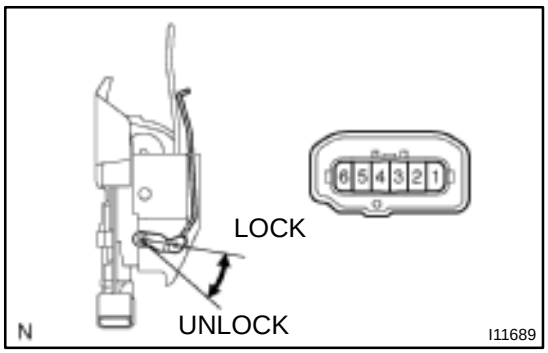

4. Driver's door:
INSPECT DOOR UNLOCK DETECTION SWITCH CONTINUITY

Switch position	Tester connection	Specified condition
OFF (Door Lock set to LOCK)	–	No continuity
ON (Door Lock set to UNLOCK)	3 – 4	Continuity

If continuity is not as specified, replace the switch.

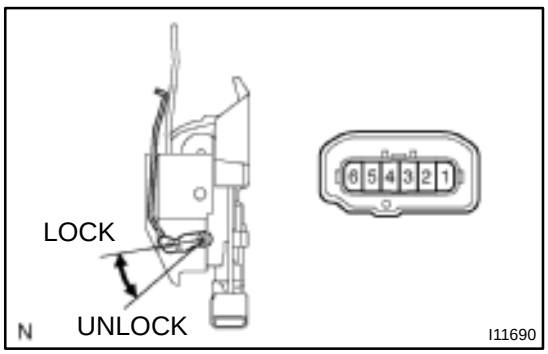

5. Passenger's door:
INSPECT DOOR UNLOCK DETECTION SWITCH CONTINUITY

Switch position	Tester connection	Specified condition
OFF (Door Lock set to LOCK)	–	No continuity
ON (Door Lock set to UNLOCK)	3 – 4	Continuity

If continuity is not as specified, replace the switch.

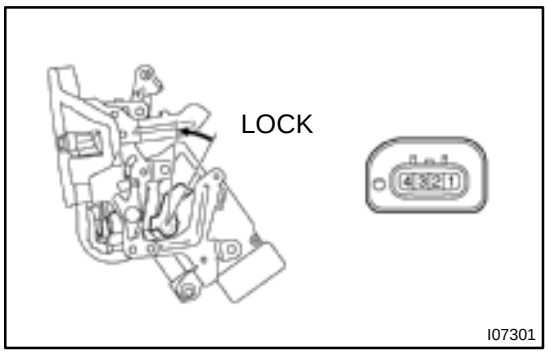

6. Rear left door:
INSPECT DOOR UNLOCK DETECTION SWITCH CONTINUITY

Switch position	Tester connection	Specified condition
OFF	–	No continuity
ON	1 – 2	Continuity

If continuity is not as specified, replace the switch.

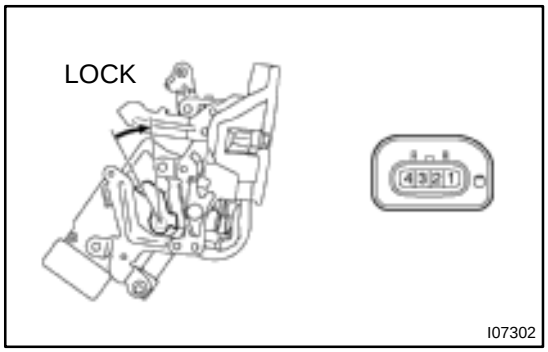

7. Rear right door:
INSPECT DOOR UNLOCK DETECTION SWITCH CONTINUITY

Switch position	Tester connection	Specified condition
OFF	–	No continuity
ON	3 – 4	Continuity

If continuity is not as specified, replace the switch.

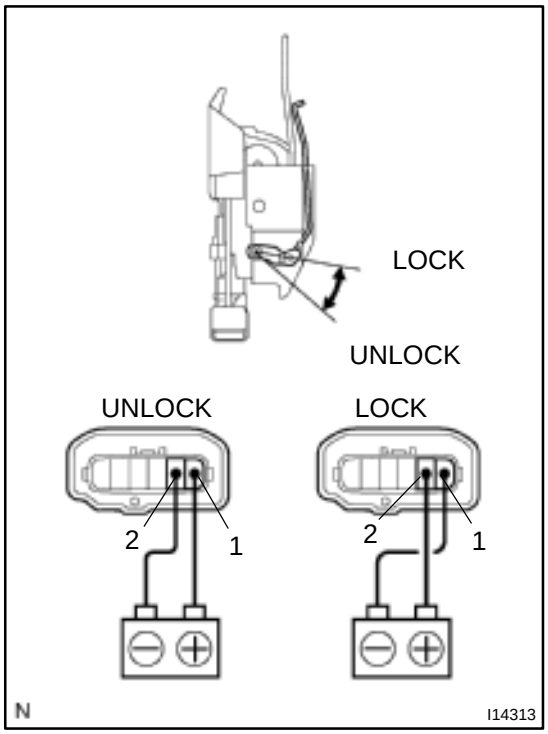

8. Driver's door:
INSPECT DOOR LOCK MOTOR OPERATION

(a) Connect the positive (+) lead from the battery to terminal 1 and the negative (–) lead to terminal 2, and check that the door lock link moves to UNLOCK position.

(b) Reverse the polarity and check that the door lock link moves to LOCK position.

If operation is not as specified, replace the door lock assembly.

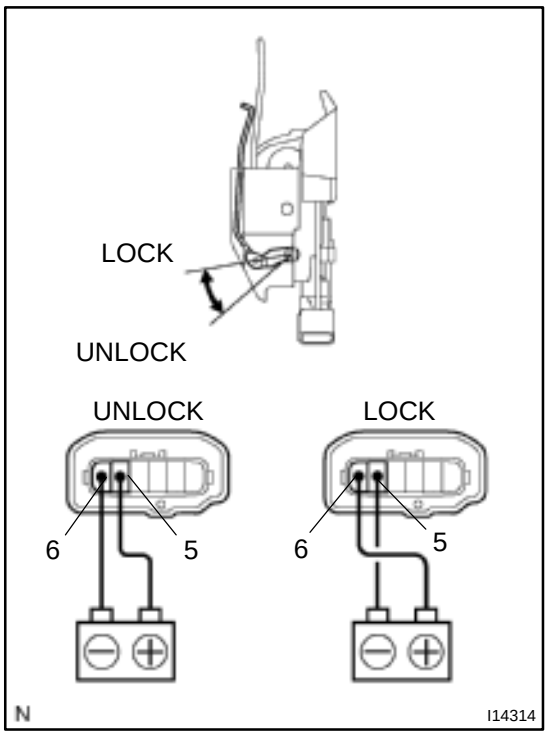

9. Passenger's door:
INSPECT DOOR LOCK MOTOR OPERATION

(a) Connect the positive (+) lead from the battery to terminal 5 and the negative (–) lead to terminal 6, and check that the door lock link moves to UNLOCK position.

(b) Reverse the polarity and check that the door lock link moves to LOCK position.

If operation is not as specified, replace the door lock assembly.

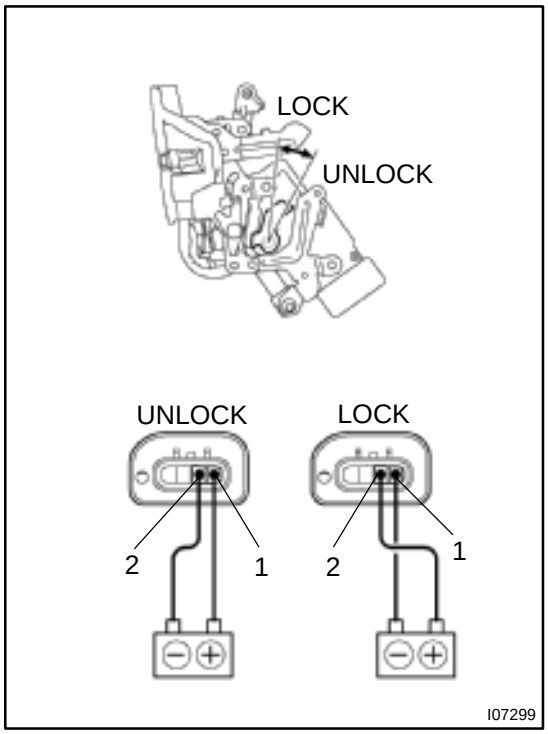

10. Rear left door:
INSPECT DOOR LOCK MOTOR OPERATION

(a) Connect the positive (+) lead from the battery to terminal 1 and the negative (–) lead to terminal 2, and check that the door lock link moves to UNLOCK position.

(b) Reverse the polarity and check that the door lock link moves to LOCK position.

If operation is not as specified, replace the door lock assembly.

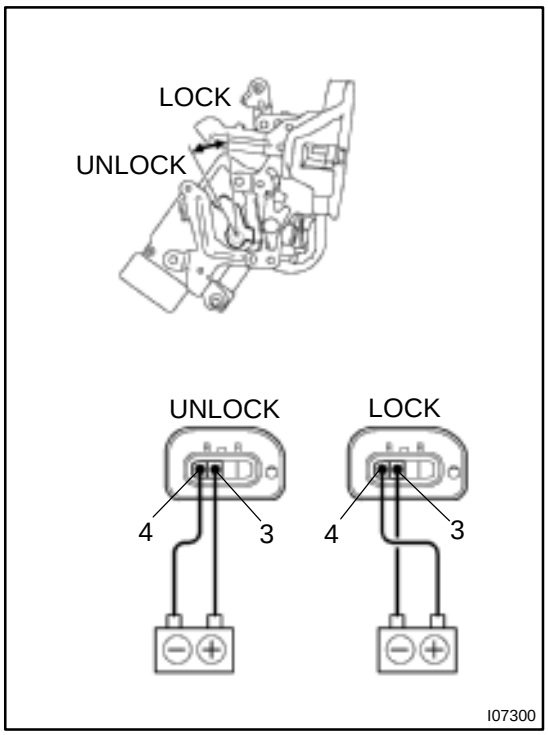

11. Rear right door:
INSPECT DOOR LOCK MOTOR OPERATION

(a) Connect the positive (+) lead from the battery to terminal 3 and the negative (–) lead to terminal 4, and check that the door lock link moves to UNLOCK position.

(b) Reverse the polarity and check that the door lock link moves to LOCK position.

If operation is not as specified, replace the door lock assembly.

DI7T9–01

PRE–CHECK

1. OUT LINE OF THEFT DETERRENT SYSTEM

When the theft deterrent system detects any theft, it informs people around with flashing lights and sound.

This system is designed to be upgraded by featuring an optional glass break sensor.

All initial setting are performed in active mode. It can be switched to passive mode by specified operation. (See step 3. CHANGING METHOD OF PASSIVE MODE)

HINT:

There are 4 conditions in this system which are disarmed state, arming preparation, armed state and alarm sounding.

(1) Disarmed state
- When the alarming function does not operate.
- When theft deterrent function is not performed.

(2) Arming preparation
- Time until transferring to armed state.
- Theft deterrent function is not performed.

(3) Armed state
When theft deterrent function is possible.

(4) Alarm sounding:
In this condition, once theft is detected, it is informed using light and sound to people around the vehicle.
Refer to the table for alarming method or time.

Alarming method	Horn
	Security horn
	Headlight
	Taillight
	Hazard
	Interior light
Alarming time	60 seconds
Alarming output	Continuous 0.4 secs. (ON) 0.4 secs. (OFF)

HINT:

Alarming output for hazard is same as the one for the hazard on the vehicle.

In the arming condition when either of doors is unlocked with key not in the key cylinder, force lock signal is output.

2. ACTIVE ARMING MODE

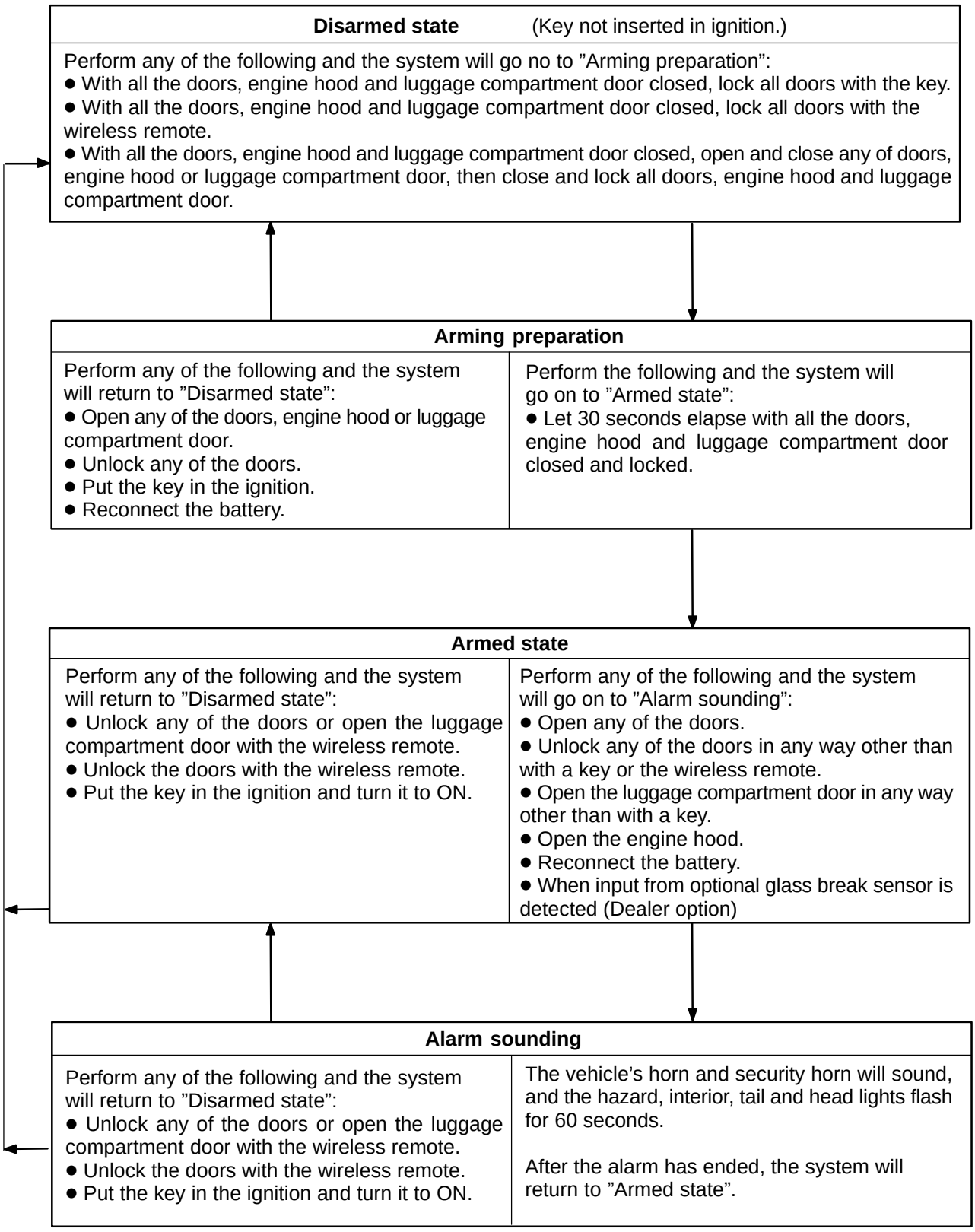

Indicator light output:

Condition	Indicator light
Disarmed state	OFF
Arming preparation	ON
Armed state	OFF
Alarm sounding	ON

HINT:
Even in disarmed state, the indicator light flash. (Due to the signal output form immobilizer system). The indicator always flashes receiving the signal from the immobilizer system at any time in the armed state.

Flashing frequency:
0.2 seconds (ON)
1.8 seconds (OFF)
Answer back:
The hazard lights flush as answer back under the following conditions.

(1) When the system is set.
When arming preparation is set from disarmed state using the wireless door lock, the hazard lights flush once.

(2) When the system is released.
When disarmed state is set from either arming preparation, armed state or alarm sounding using the wireless door lock, the hazard lights flush twice.

3. PASSIVE ARMING MODE

- This mode can be switched according to the specified operation.
- All initially set modes (when shipped from factory) are active mode. (No passive mode)

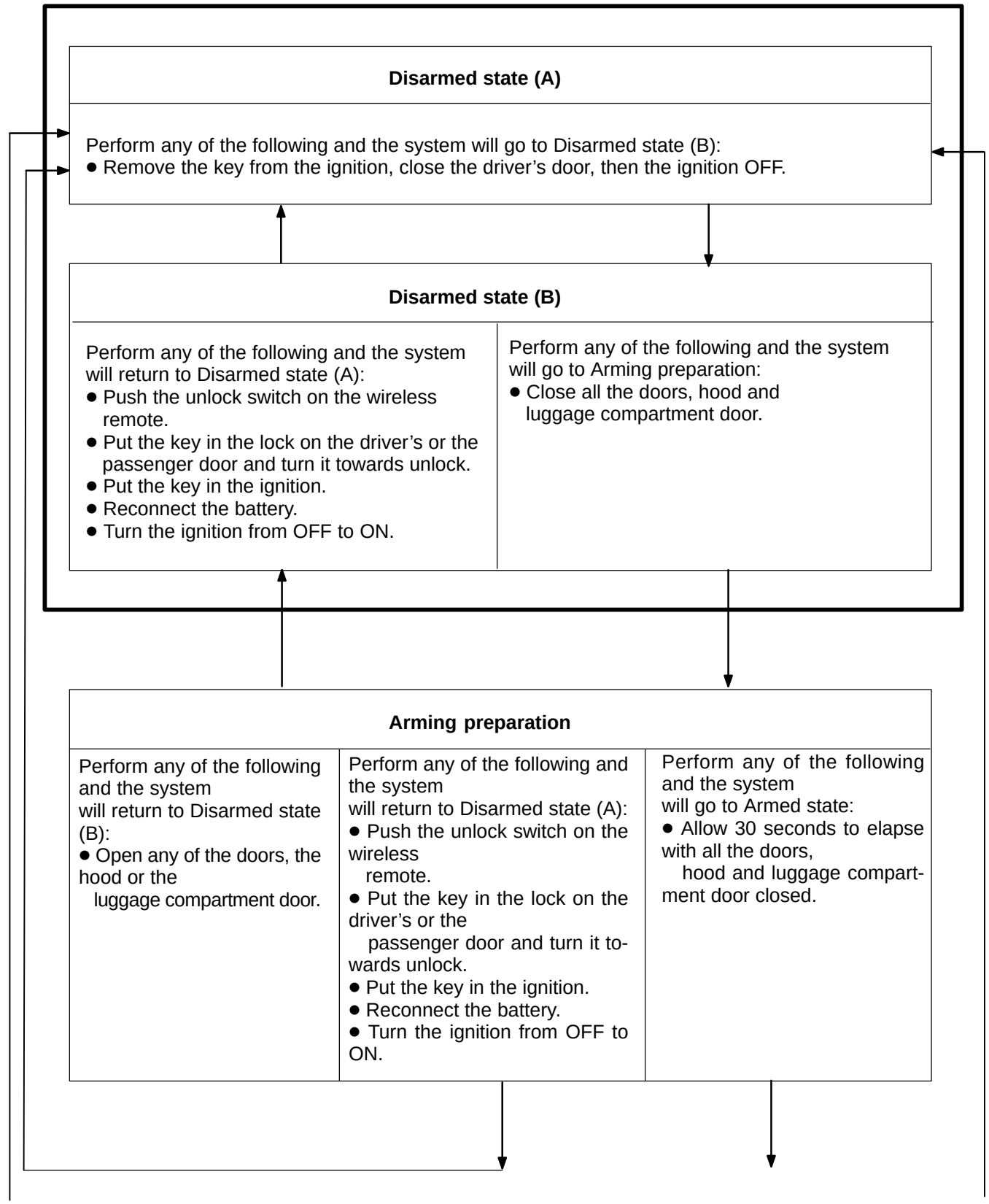

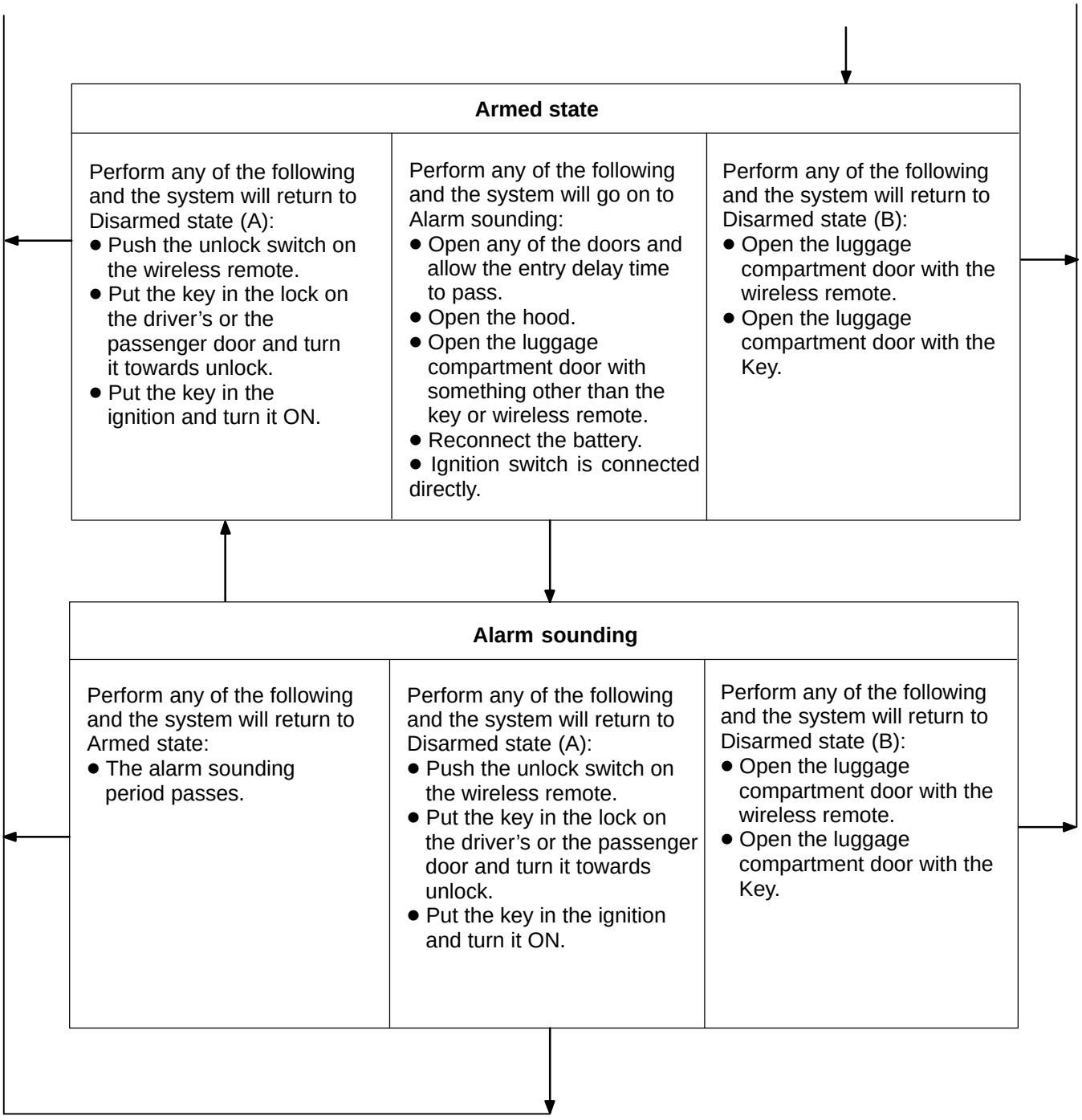
Armed state
Perform any of the following and the system will return to Disarmed state (A):
● Push the unlock switch on the wireless remote.
● Put the key in the lock on the driver's or the passenger door and turn it towards unlock.
● Put the key in the ignition and turn it ON.
Perform any of the following and the system will go on to Alarm sounding:
● Open any of the doors and allow the entry delay time to pass.
● Open the hood.
● Open the luggage compartment door with something other than the key or wireless remote.
● Reconnect the battery.
● Ignition switch is connected directly.
Perform any of the following and the system will return to Disarmed state (B):
● Open the luggage compartment door with the wireless remote.
● Open the luggage compartment door with the Key.
Alarm sounding
Perform any of the following and the system will return to Armed state:
● The alarm sounding period passes.
Perform any of the following and the system will return to Disarmed state (A):
● Push the unlock switch on the wireless remote.
● Put the key in the lock on the driver's or the passenger door and turn it towards unlock.
● Put the key in the ignition and turn it ON.
Perform any of the following and the system will return to Disarmed state (B):
● Open the luggage compartment door with the wireless remote.
● Open the luggage compartment door with the Key.

HINT:
In armed state either closed door is opened, entry delay occurs. (15 secs.)
During this time, the mode transfers to disarmed state when the condition described above * is met.
When the condition is not met, the system judges theft occurs, the mode transfers to alarm sounding.

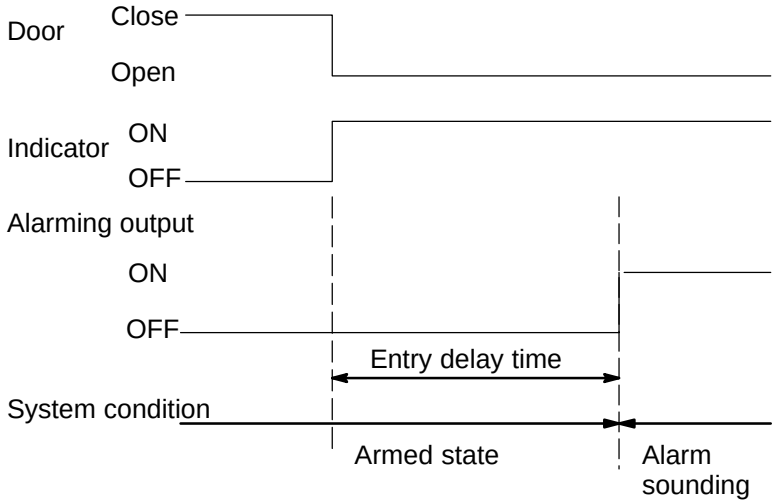

Indicator light output:

Condition	Indicator light
Disarmed state	OFF
Arming preparation	ON
Armed state (Entry delay time)	OFF (ON)
Alarm sounding	ON

HINT:
Even in disarmed state, the indicator light flash. (Due to the signal output form immobilizer system). The indicator always flashes receiving the signal from the immobilizer system at any time in the arming condition.

Flashing frequency:
0.2 seconds (ON)
1.8 seconds (OFF)

(a) Transfer to active mode:
In each passive mode, when ”disarmed state of active mode → arming preparation transfer condition” is met, the active mode transfers to each condition. In this case, active mode continues till disarmed state.

Passive mode when transfer condition is met.	Active mode transfer condition
Disarmed state	Arming preparation condition
Arming preparation condition	Arming preparation condition
Armed state (During entry delay time)	Arming condition (After alarming time has elapsed, arming condition)
Alarm sounding	After alarming time has elapsed, arming condition

(b) Answer back:
The hazard lights flush as answer back under the following conditions.
(1) When the system is set.
When arming preparation is set from disarmed state using the wireless door lock, the hazard lights flush once.
(2) When the system is released.
When disarmed state is set from either arming preparation, armed state or alarm sounding using the wireless door lock, the hazard lights flush twice.

4. CHANGING METHOD OF PASSIVE MODE (ON or OFF)

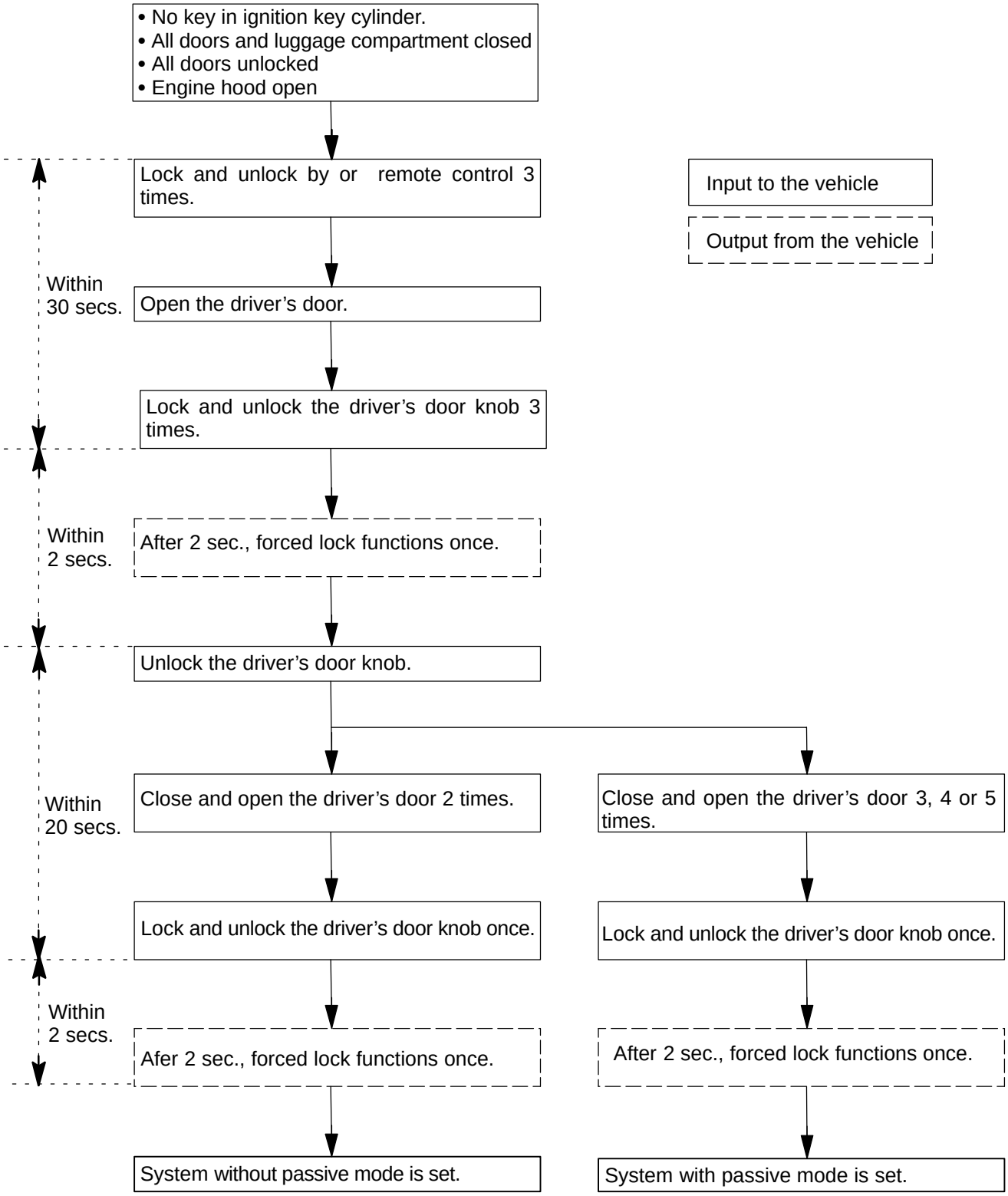

HINT:

- Initially (when shipping), system without passive mode is set..
- Any input or output other than the above shall be regarded as invalid.(Start again from the beginning).

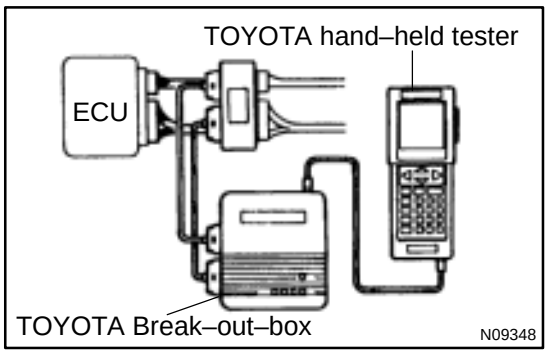

5. ECU TERMINAL VALUES MEASUREMENT BY USING TOYOTA BREAK–OUT–BOX AND TOYOTA HAND–HELD TESTER

(a) Hook up the TOYOTA break–out–box and TOYOTA hand–held tester to the vehicle.

(b) Read the ECU input/output values by following the prompts on the tester screen.

(c) Please refer to the TOYOTA hand–held tester has a ”Snapshot” function. This records the measured data and is effective in the diagnosis of intermittent problems.

BE0IM–13

PRE–CHECK

Only wireless function (Remote control) will not operate.
(If a new transmitter or a transmitter of the same type that works properly with the vehicle is not available.)

Make the vehicle in the initialized condition:
The initialized condition is the condition when the following conditions are satisfied.
(1) Key plate has not been inserted in the ignition key cylinder.
(2) All the doors are closed. (Door warning light is off.)
(3) All the doors are locked.

Basic function check:

Under the standard operation, when repeating the operation of UNLOCK and LOCK switch 3 times or more alternately, check the UNLOCK–LOCK operation from 3rd time onward.
● Following procedures are standard operation.
(1) Keep about 1 M away to the right direction from the outside handle of a driver's seat.
(2) Face the transmitter toward the vehicle and press one of transmitter switches for about 1 sec.

Yes

Normal
<Reference>
● Operative distance may differ according to an operator, the way of holding the transmitter or position.
● Because weak electric wave is used, when there is strong wave or noise in the used frequency ,operation distance might be shortened.

No

Transmitter battery check:

Replace the transmitter battery with a new or normal one and check UNLOCK–LOCK function works under the standard operation.
<Reference>
● The battery should be replaced by only the shops with sufficient skill as new normal battery is necessary.
● Battery quality can be judged by checking the remnant volume of the battery.

Yes → Battery faulty.

No

Make the vehicle be in the initialized condition.

Inspection start by using self diagnostic mode:

Enter into the self diagnostic mode.
If operating door control receiver in the order of 1 through 2, the mode turns to diagnostic mode.
(1) Insert the key plate in the ignition key cylinder and pull out, then insert it again and turn ignition switch OFF → ON → OFF once within 5 seconds after pulling out.
(2) After completing the procedure within 30 seconds, turn the ignition switch OFF → ON → OFF 9 times.
HINT:
In the case that either of (1) and (2) conditions is not satisfied, transfer to normal mode.
<Reference>
When completing self diagnostic mode, turn the ignition switch ON.
LOCK and UNLOCK operation is not performed under the self diagnostic mode.

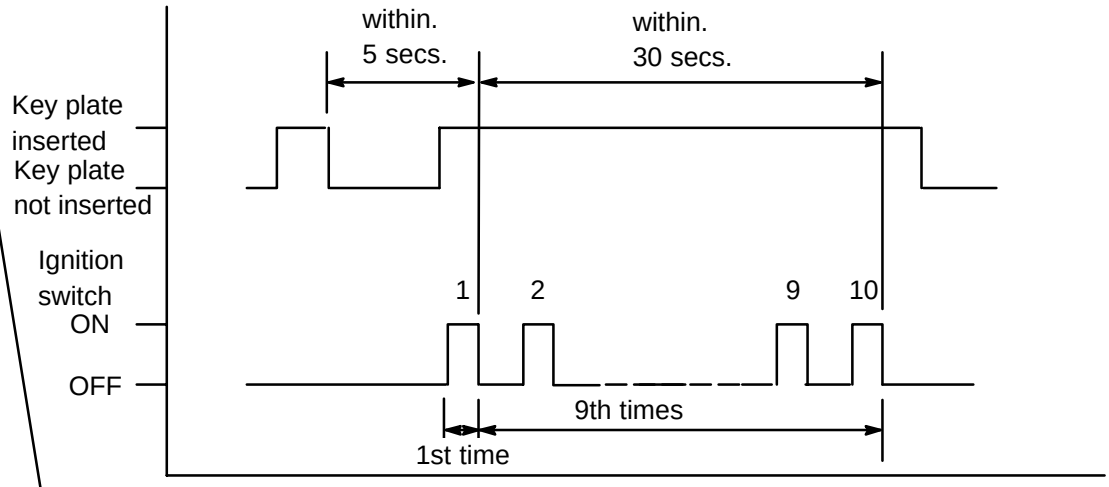

Diagnostic mode operation confirmation:
Check the taillight lights up soon after the input operation of self diagnostic mode.

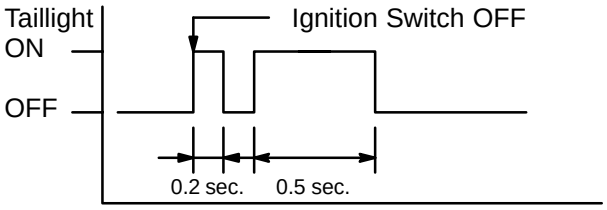

<Reference>
● Taillight light up should be maximum despite the controller.

No

Is the method to input the diagnostic mode correct?

No

Yes

(Not enter in diagnostic mode)

Is the function of operation confirmation taillight normal?

No

Yes

Taillight faulty.

Yes

Confirmation of diagnostic mode:
Check taillight light up when pressing on each switch of transmitter.

(1) Received normal wave of LOCK switch.

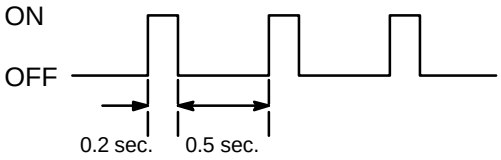

(2) Received normal wave of UNLOCK switch.

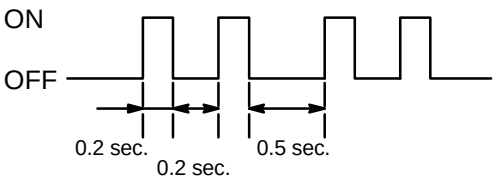

(3) Received normal wave of PANIC switch.

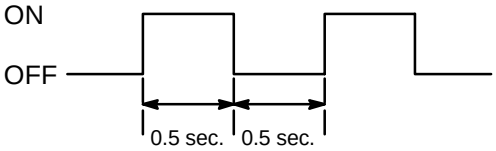

(4) Compatibility of the recognition code or out from synchronization of rolling code.*.

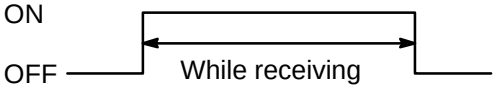

No response

Transmitter faulty or wireless door lock receiver faulty.
<Reference>
● Use another (normal) transmitter and check with the diagnostic mode and in the case that the check result shows the transmitter faulty, it can be judged that wireless door lock receiver is normal.

In case of taillight outputs from (1) – (3)

In case of taillight outputs of (4)

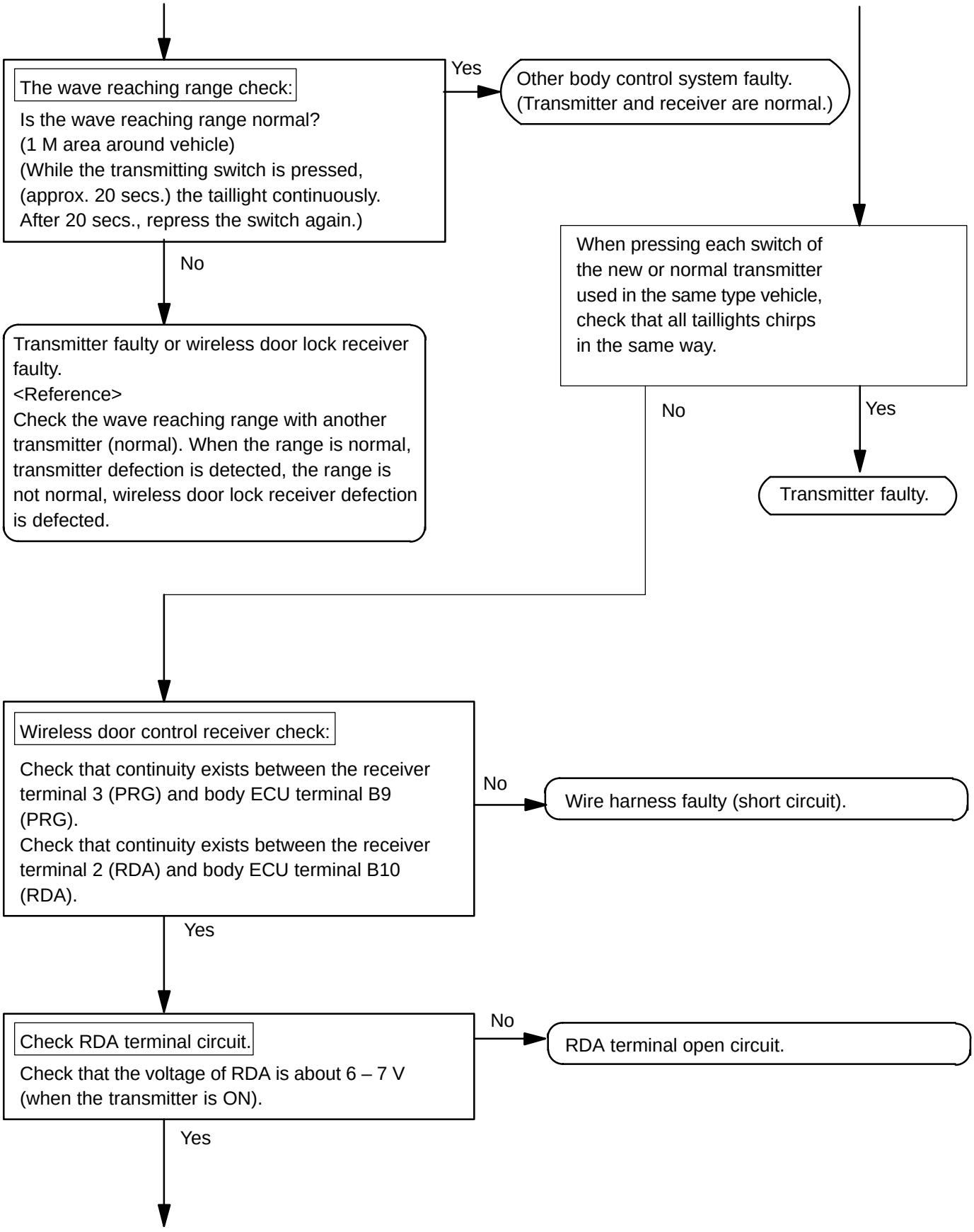
The wave reaching range check:
Is the wave reaching range normal?
(1 M area around vehicle)
(While the transmitting switch is pressed,
(approx. 20 secs.) the taillight continuously.
After 20 secs., repress the switch again.)
Yes
Other body control system faulty.
(Transmitter and receiver are normal.)
No
Transmitter faulty or wireless door lock receiver faulty.
<Reference>
Check the wave reaching range with another transmitter (normal). When the range is normal, transmitter defection is detected, the range is not normal, wireless door lock receiver defection is defected.
When pressing each switch of the new or normal transmitter used in the same type vehicle, check that all taillights chirps in the same way.
No
Yes
Transmitter faulty.
Wireless door control receiver check:
Check that continuity exists between the receiver terminal 3 (PRG) and body ECU terminal B9 (PRG).
Check that continuity exists between the receiver terminal 2 (RDA) and body ECU terminal B10 (RDA).
No
Wire harness faulty (short circuit).
Yes
Check RDA terminal circuit.
Check that the voltage of RDA is about 6 – 7 V (when the transmitter is ON).
No
RDA terminal open circuit.
Yes

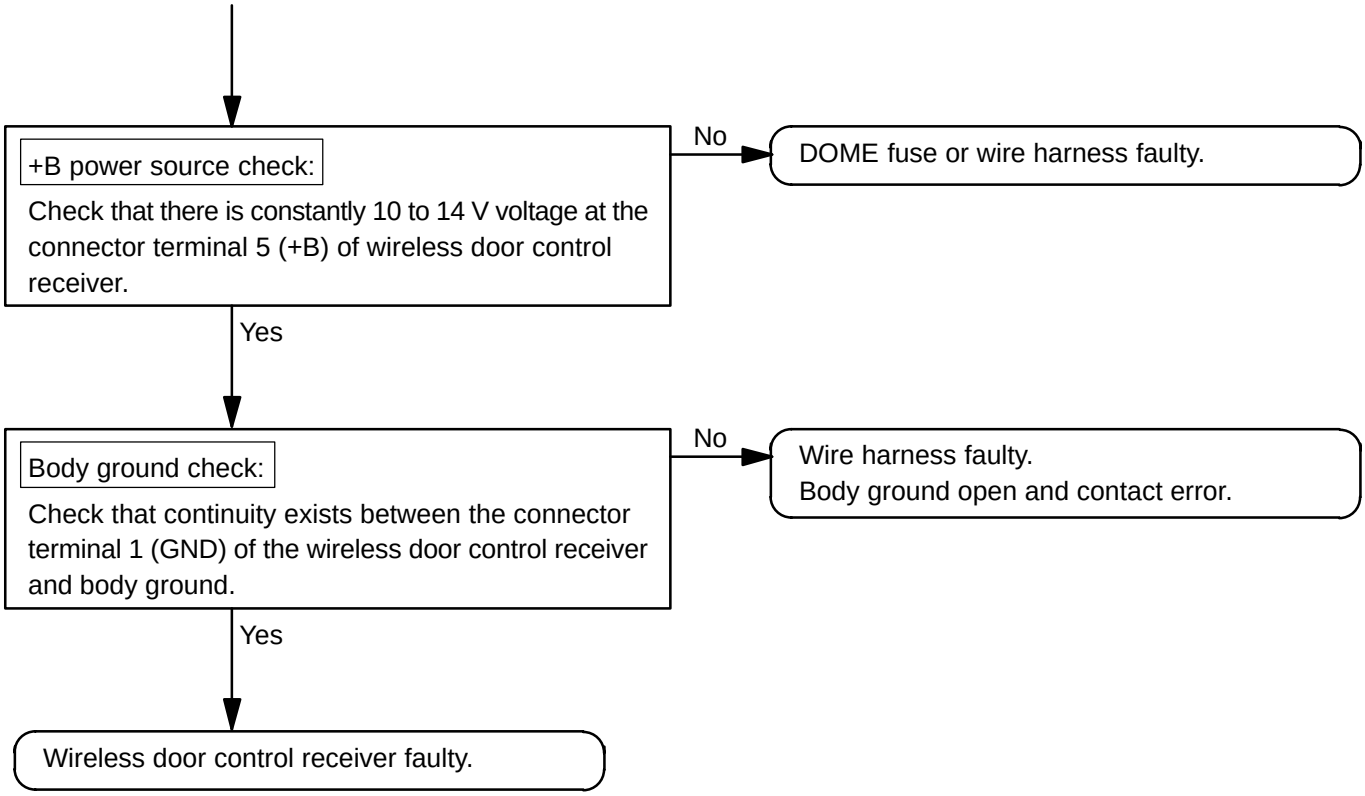
+B power source check:
Check that there is constantly 10 to 14 V voltage at the connector terminal 5 (+B) of wireless door control receiver.
No
DOME fuse or wire harness faulty.
Yes
Body ground check:
Check that continuity exists between the connector terminal 1 (GND) of the wireless door control receiver and body ground.
No
Wire harness faulty.
Body ground open and contact error.
Yes
Wireless door control receiver faulty.

BE0OJ–12

INSPECTION

1. INSPECT WIRELESS DOOR LOCK TRANSMITTER OPERATION

HINT:

Refer to ”Wireless door lock control receiver and transmitter replacement” on page BE–87.

(a) Using a screwdriver, remove and cover.

(b) Remove the battery (lithium battery).

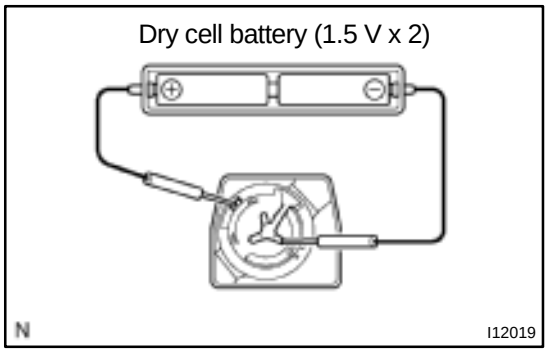

(c) Install a new or normal battery (lithium battery).

HINT:

When a new or normal battery can not be obtained, connect 2 new 1.5 V batteries in series, connect the battery (+) to the battery receptacle side terminal and battery (–) to the bottom terminal, then apply 3 V voltage to the transmitter.

(d) In the location where is approx. 1 M away from driver’s outside handle in the right direction, and check the transmitter operation when pressing transmission switch on the surface of the transmitter body.

Standard:

Remote control of vehicle door lock can be operated.

HINT:

- The minimum operation distance differs according to operator, the way of holding, and location.
- As weak wave is used, operation distance might be shortened when noise is detected in strong wave or used frequency.

(e) Install the battery (lithium battery).

(f) Install a cover so that rubber cover is not distorted or slipped off.

2. CHECK BATTERY CAPACITY

HINT:

- Make sure to use the TOYOTA electrical tester.
- With the battery unloaded, judge can not be made whether the battery is available or not on the test.
- When the transmitter is faulty, the energy amount left in the battery might not be checked correctly.
- On the lithium battery used for the transmitter, the voltage more than 2.5 V with the battery unloaded is shown on the tester until the energy is completely consumed.
  Accordingly when inspecting the energy amount left in the battery, it is necessary to measure the voltage when the battery is loaded. (1.2 kΩ).

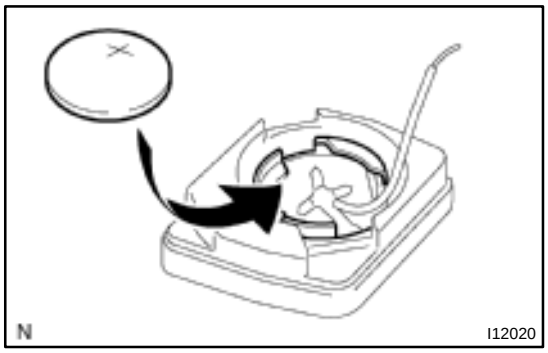

(a) Remove the cover using a (–) driver.
(b) Remove the battery (lithium battery) from the transmitter.
(c) Connect the lead to the (–) terminal of the transmitter and install the battery.

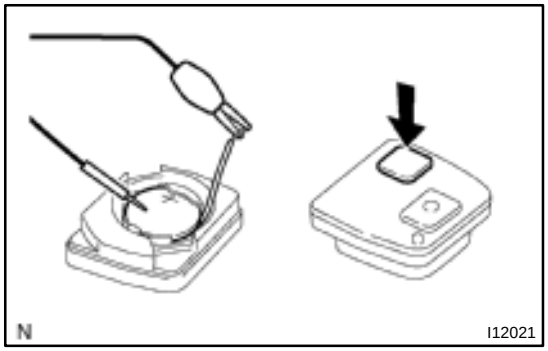

(d) Connect the (+) tester to the (+) battery (lithium battery), and (–) tester to the lead respectively.
(e) Press one of the transmitting switches on the transmitter for approx. 1 second.
(f) Press the transmitting switch on the transmitter again to check the voltage.
Standard: 2.1 V or more

HINT:

- When the temperature of the battery is low, the judge can not be made correctly.
  When the outcome of the test is less than 2.1 V, conduct the test again after leaving the battery in the place at 18 °C for more than 30 minutes.
- By auto power off function, the voltage becomes no load voltage (more than 2.5 V) condition after 20 seconds from the switch was pressed.
  Make sure to read the voltage before of it.
- High voltage might be shown 1 to 2 times after leaving the battery, judge should be made with the voltage shown at the 3rd time or later.

(g) Disconnect the lead.
(h) Set the battery (lithium battery) in the transmitter.
(i) Install the cover, so that the rubber cover is not distorted or slipped off.

Wire harness side:

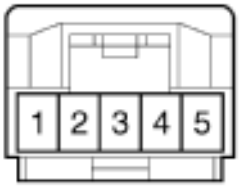

3. INSPECT WIRELESS DOOR LOCK CONTROL RECEIVER CIRCUIT

(a) Disconnect the connector from the receiver and inspect the connector on the wire harness side, as shown below.

Tester connection	Condition	Specified condition
1 – Ground	Constant	Continuity
5 – Ground	Constant	Battery voltage

If the circuit is not as specified, inspect the circuit connected to other parts.

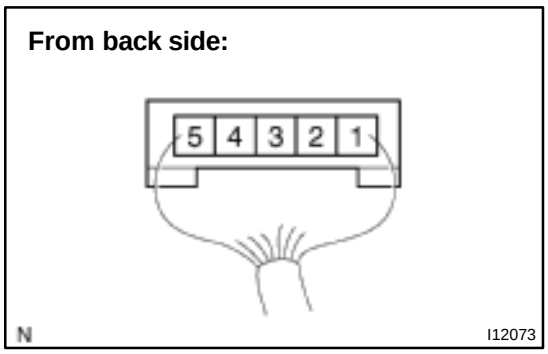

(b) Connect the wire harness side connector to the receiver and inspect the wire harness side connector from the back side, as shown below.

Tester connection	Condition	Specified condition
3 – Ground	Normal mode	10 – 14 V
2 – Ground	Ignition switch position OFF Key removed Transmitter ON	About 6 – 7 V

If circuit is as specified, replace the receiver.
If the circuit is not as specified, inspect the circuit connected to other parts.

BE1D9–02

REPLACEMENT

1. REPLACE TRANSMITTER (LITHIUM) BATTERY

NOTICE:

Special caution should be taken for handling each component as they are precision electronic components.

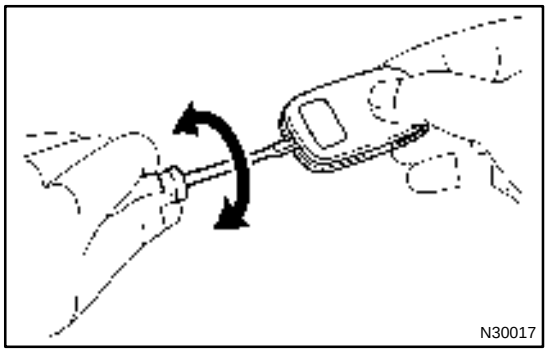

(a) Using a screwdriver, remove the cover.

NOTICE:

Do not pry out the cover forcibly.

HINT:

Push the cover with a finger as shown in the illustration, so that there becomes clearance, then pry out the cover from that clearance.

(b) Remove the transmitter.

(c) Remove the battery (lithium battery).

NOTICE:

- **Do not push the terminals with a finger.**
- **If prying up the battery (lithium battery) forcibly to remove, the terminals are deformed.**

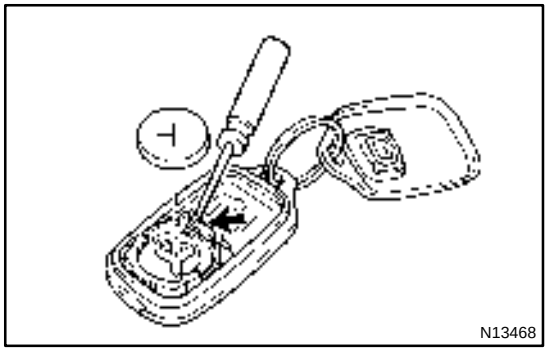

(d) Install a battery (lithium battery) as shown in the illustration.

NOTICE:

Face the battery upward. Take care not to deform the terminals.

(e) Check that the rubber is not distorted or slipped off, and install the cover.

2. REPLACE DOOR CONTROL RECEIVER AND TRANSMITTER

NOTICE:

When replacing the door control receiver and transmitter, registration of recognition code is necessary because they are provided as single components.

(a) Select which operation mode should be performed from the following modes.
- Add mode
- Rewrite mode
- Prohibition mode
- Confirmation mode

HINT:
- The add mode is used to retain codes already registered while you register new recognition codes. This mode is used when adding a transmitter. However, if the number of registered codes exceeds 4 codes, previously registered codes are correspondingly erased in order, starting from the first registered code.
- The rewrite mode is used to erase all previously registered codes and register only new recognition codes.
- The prohibition mode is used to erase all registered codes and cancels the wireless door lock function. Use this mode when the transmitter is lost.
- The confirmation mode is for confirming how many recognition codes are already registered before you register additional recognition codes.

(b) Follow the chart on the following pages to register the transmitter recognition code at the wireless door lock control receiver.

HINT:
- When procedure is out of the specified, the operation returns to normal operation.
- Maximum 4 recognition codes can be registered.

Start registration of recognition code

The vehicle should be in the following conditions.
- The key is not inserted in the ignition key cylinder.
- Driver's door is OPEN. (Other doors are CLOSED)
- Driver's door is UNLOCKED.

Insert the key into the ignition key cylinder, then pull it out. (Rerform this twice within 5 seconds)

Within 40 secs.

Close and open the door (manual operation) 2 times.

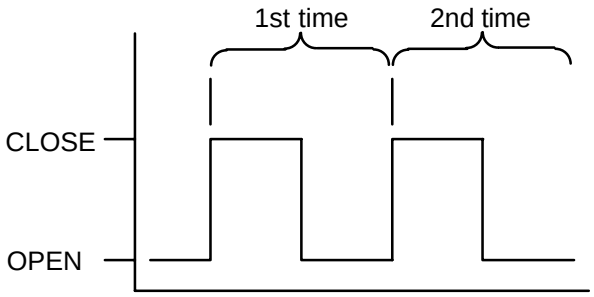

Insert the key into the ignition key cylinder, then pull it out.

Within 40 secs.

Again close and open the door (manual operation) 2 times.

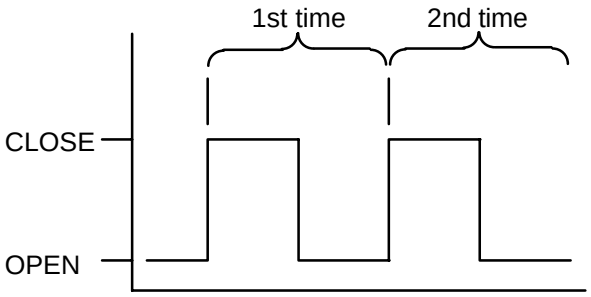

Close the all door and insert the key into the ignition key cylinder.

Turn the ignition switch from ON to LOCK at approx. 1 sec. interval 1 to 5 times to select the mode.

Add mode

ON – LOCK change occurs 1 time

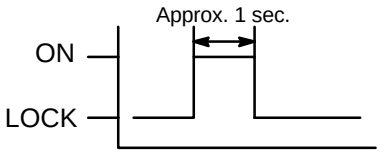

Confirmation mode

ON – LOCK change occurs 3 times

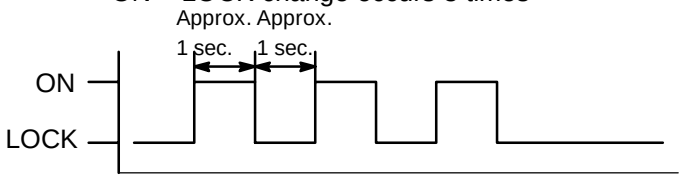

Rewrite mode

ON – LOCK change occurs 2 times

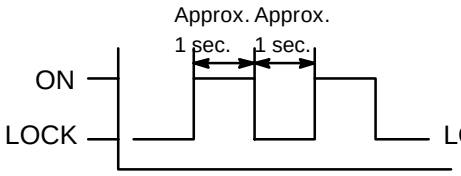

Prohibition mode

ON – LOCK change occurs 5 times

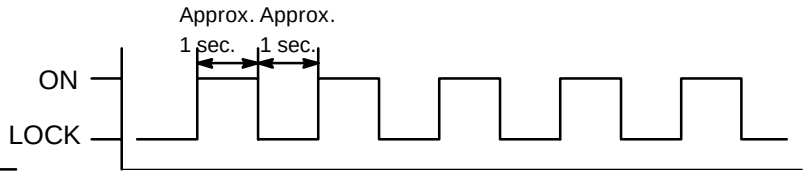

Pull out the key from the ignition key cylinder.

When add mode or rewrite mode is selected.

Door control relay automatically performs the LOCK–UNLOCK operation once or twice at 1 sec. interval to inform the operator that either the add mode or rewrite mode has been selected.

Within 3 secs.

LOCK–UNLOCK occurs once

Indicates that add mode has been selected.

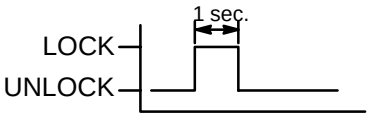

LOCK–UNLOCK occurs twice

Indicates that rewrite mode has been selected.

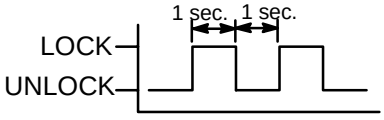

When prohibition mode is selected.

When confirmation mode is selected.

Door control relay automatically performs the LOCK–UNLOCK operation 1 to 4 times at 2 sec. interval to inform the operator of the number of the registered codes.
HINT:
When the number of the registered code is 0, the operation is automatically performed 5 times.

Example:
When the operation is performed twice, it directs that 2 types of recognition code have been registered.

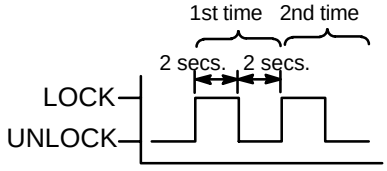

Registration of recognition code (Confirmation mode and prohibition mode) is completed.

When prohibition mode is selected.

Within 40 secs.

Door control relay performs LOCK–UNLOCK operation 5 times at a 1 sec. interval to inform the operator that prohibition mode has been selected.

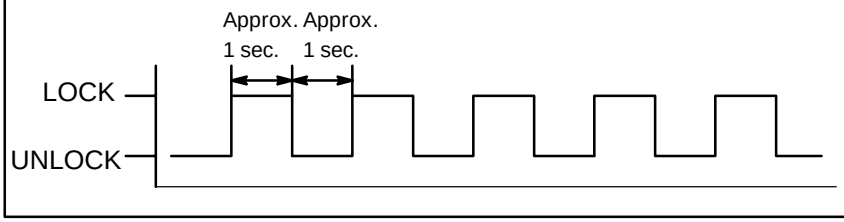

Press the lock and unlock switches on the transmitter switch simultaneously for more than between 1 sec. or more and 1.5 sec. below.

Within 3 secs.

Press one of 3 switches on the transmitter.

Within 3 secs.

Door control relay automatically performs LOCK–UNLOCK operation once or twice at a 1 sec. interval to inform the operator that the receiver has received the signal from the transmitter.

LOCK–UNLOCK occurs once

Registration of recognition code is completed

LOCK–UNLOCK occurs twice

Registration of recognition code has not been completed.

- Recognition code received first time and second time did not match.
- When selecting add mode, a registered recognition code was received.

If LOCK–UNLOCK operation can not be performed at all, the mode returns to the normal mode, then start with ”Start registration of recognition code”.

Proceed to finish registration

Proceed to continue registration

Within 40 secs.

If even one of the following conditions is satisfied, registration of recognition codes is completed.

- 40 secs. elapses since the door control relay response.
- The driver’s door is opened.
- The key plate is inserted in the ignition key cylinder.
- 4 type recognition codes are registration at one time.

Registration of recognition codes (add mode or rewrite mode) is completed.

BE1UW–01

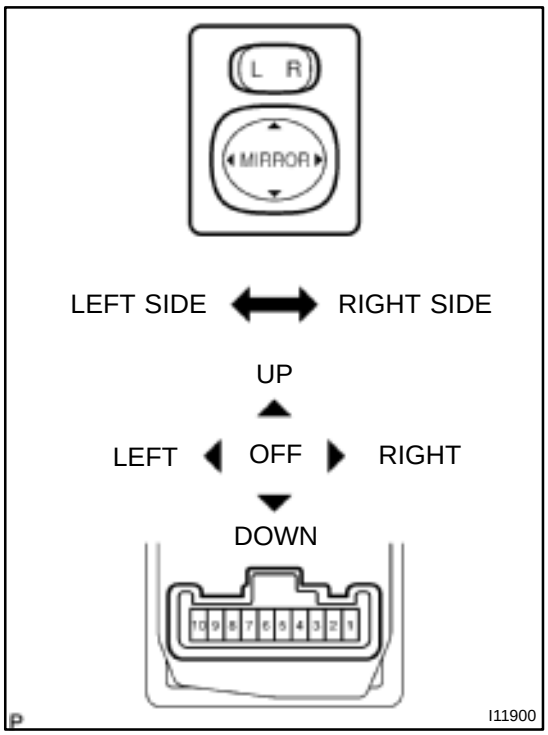

INSPECTION

1. INSPECT LEFT SIDE MIRROR SWITCH CONTINUITY

Switch position	Tester connection	Specified condition
OFF	–	No continuity
UP	4 – 8 6 – 7	Continuity
DOWN	4 – 7 6 – 8	Continuity
LEFT	5 – 8 6 – 7	Continuity
RIGHT	5 – 7 6 – 8	Continuity

2. INSPECT RIGHT SIDE MIRROR SWITCH CONTINUITY

Switch position	Tester connection	Specified condition
OFF	–	No continuity
UP	3 – 8 6 – 7	Continuity
DOWN	3 – 7 6 – 8	Continuity
LEFT	5 – 8 6 – 7	Continuity
RIGHT	2 – 7 6 – 8	Continuity

If continuity is not as specified, replace the switch.
If continuity is as specified, inspect the switch circuit.

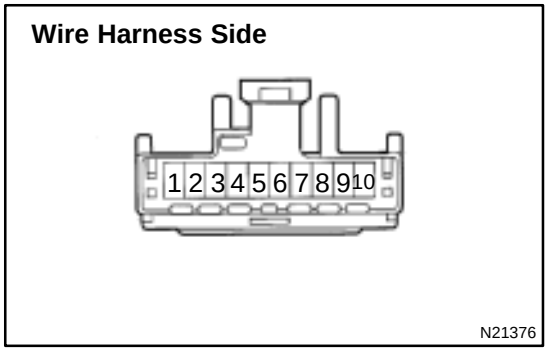

3. INSPECT MIRROR SWITCH CIRCUIT

Disconnect the connector from the switch and inspect the connector on the wire harness side.

Tester connection	Condition	Specified condition
7 – Ground	Constant	Continuity
8 – Ground	Ignition switch position LOCK	No voltage
8 – Ground	Ignition switch position ACC or ON	Battery voltage

If the circuit is not as specified, inspect the circuits connected to other parts.

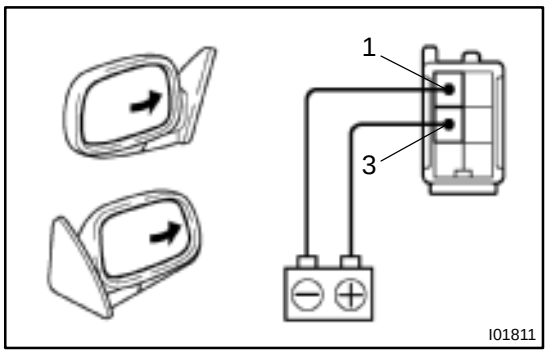

4. INSPECT MIRROR MOTOR OPERATION

(a) Connect the positive (+) lead from the battery to terminal 3 and the negative (–) lead to terminal 1, and check that the mirror turns right side.

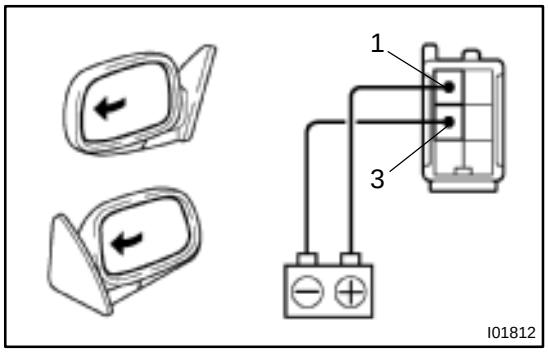

(b) Reverse the polarity, and check that the mirror turns left side.

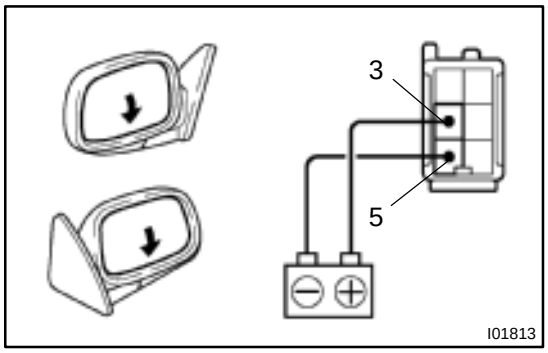

(c) Connect the positive (+) lead from the battery to terminal 3 and the negative (–) lead to terminal 5, and check that the mirror turns to the downward.

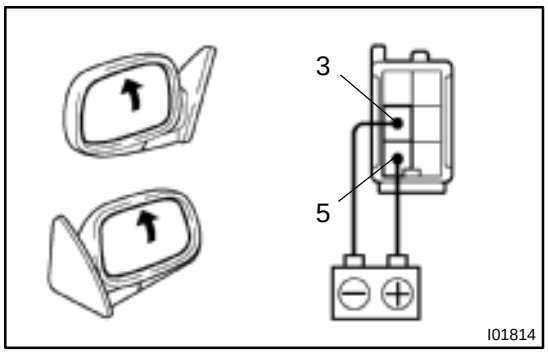

(d) Reverse the polarity, and check that the mirror turns to the upward.

If operation is not as specified, replace the mirror assembly.

AUDIO SYSTEM

DESCRIPTION

BE1UU–01

1. RADIO WAVE BAND

The radio wave bands used in radio broadcasting are as follows:

Frequency	30 kHz	300 kHz	3 MHz	30 MHz	300 MHz
Designation	LF	MF	HF	VHF	
Radio wave		AM ⟷		FM ⟷	
Modulation method	Amplitude modulation			Frequency modulation	

LF: Low frequency MF: Medium Frequency HF: High Frequency VHF: Very High Frequency

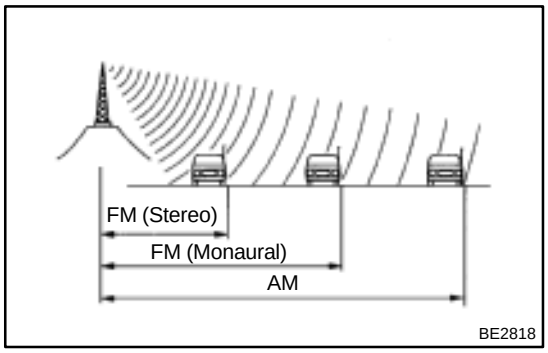

2. SERVICE AREA

There are great differences in the size of the service area for AM and FM monaural. Sometimes FM stereo broadcasts cannot be received even through AM comes in very clearly.
Not only does FM stereo have the smallest service area, but it also picks up static and other types of interference (”noise”) easily.

3. RECEPTION PROBLEMS

Besides the problem of static, there are also the problems called ”fading”, ”multipath” and ”fade out”. These problems are caused not by electrical noise but by the nature of the radio waves themselves.

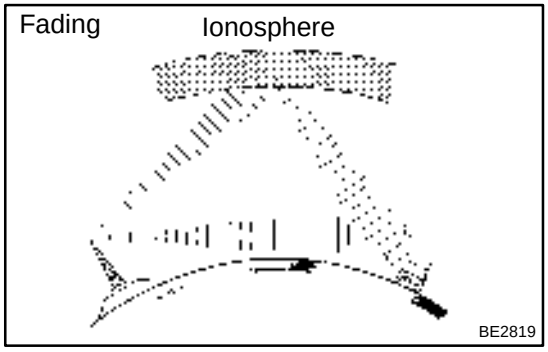

- Fading
  Besides electrical interference, AM broadcasts are also susceptible to other types of interference, especially at night. This is because AM radio waves bounce off the ionosphere at night. These radio waves then interfere with the signals from the same transmitter that reach the vehicle’s antenna directly. This type of interference is called ”fading”.

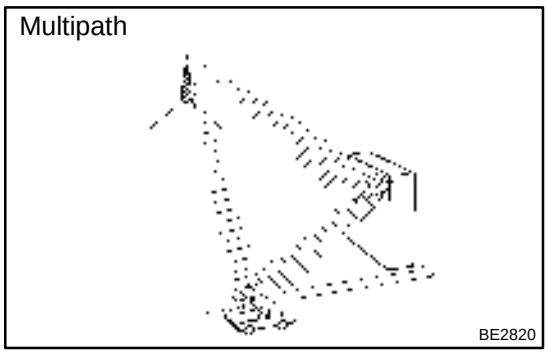

- Multipath
  One type of interference caused by bouncing of radio waves off obstructions is called ”multipath”. Multipath occurs when a signal from the broadcast transmitter antenna bounces off buildings and mountains and interferes with the signal that is received directly.

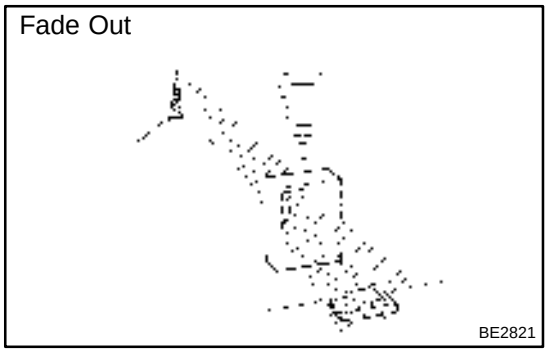

- Fade Out
  Because FM radio waves are of higher frequencies than AM radio waves, they bounce off buildings, mountains, and other obstructions. For this reason, FM signals often seem to gradually disappear or fade away as the vehicle goes behind a building or other obstructions. This is called ”fade out”.

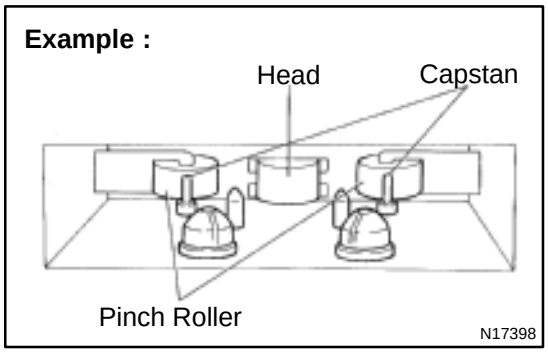

4. Tape Player/Head Cleaning:
MAINTENANCE

(a) Raise the cassette door with your finger.
Next, using a pencil or similar object, push in the guide.

(b) Using a cleaning pen or cotton applicator soaked in cleaner, clean the head surface, pinch rollers and capstans.

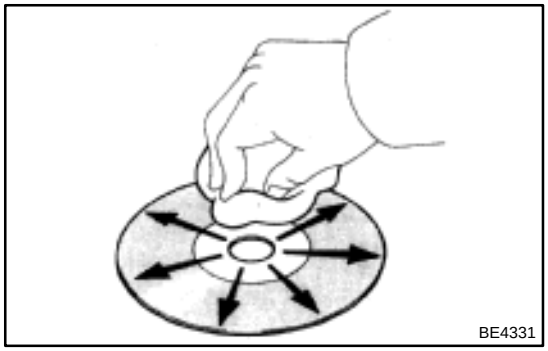

5. CD Player/Disc Cleaning:
MAINTENANCE

If the disc gets dirty, clean the disc by wiping the surface from the center to outside in the radial directions with a soft cloth.

NOTICE:

Do not use a conventional record cleaner or anti–static preservative.

BE1UV–01

TROUBLESHOOTING

1. DIAGNOSIS SYSTEM MODE (w/o Navigation system)

HINT:

Diagnosis System Mode is operated as follows.

In case of a vehicle without navigation system, there is no navigation check mode. However, other modes except for this are same as a vehicle with navigation system.

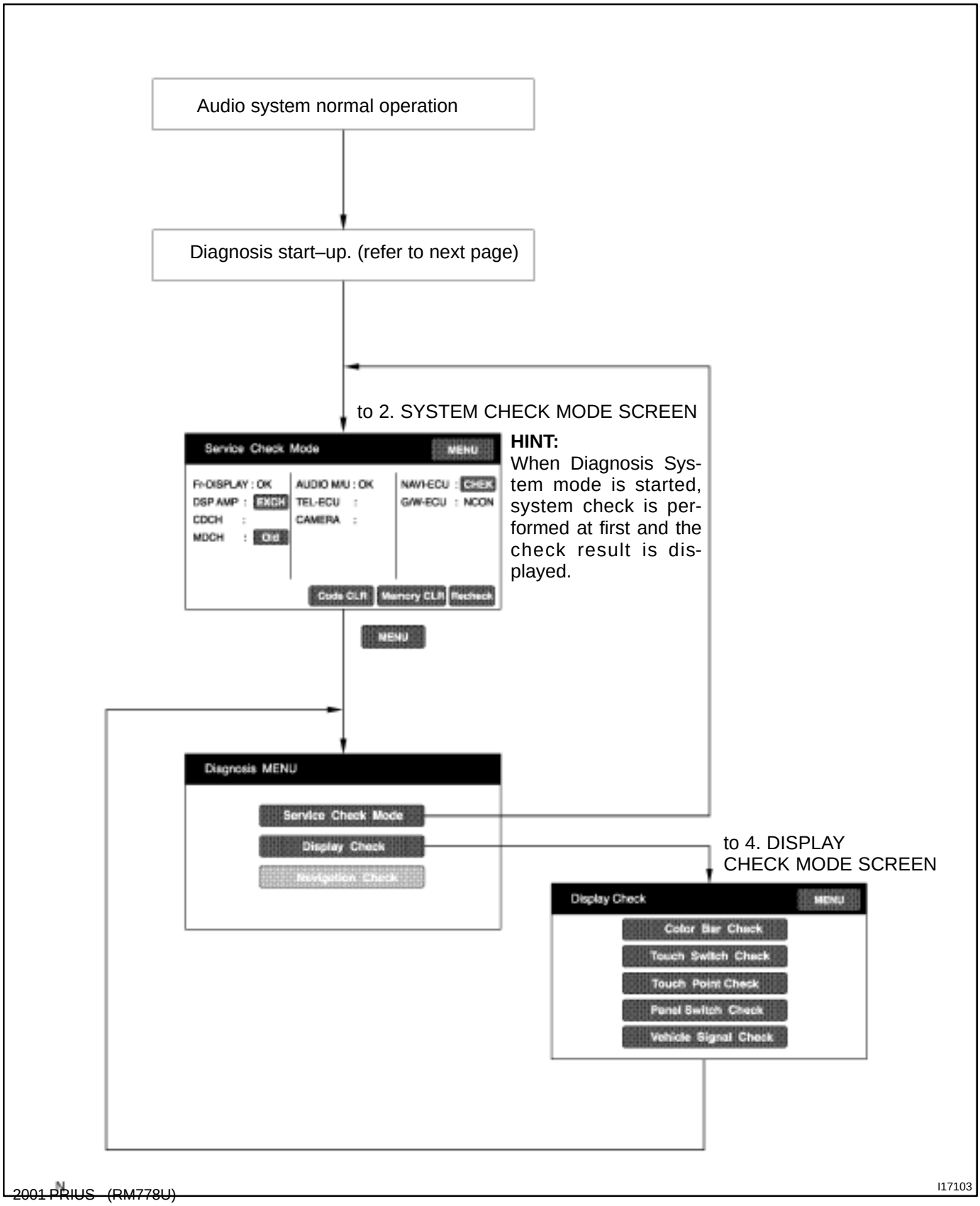

I17103

(a) DIAGNOSIS START–UP
To start the diagnosis menu, there are 2 ways: using a diagnosis check wire and using a switch.

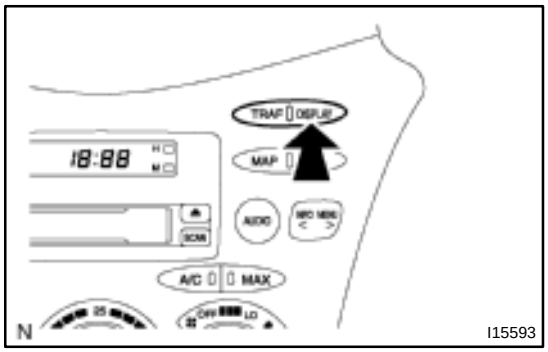

(b) START–UP BY SWITCH OPERATION
(1) Vehicle speed is 0 km/h (0 mph).
(2) Parking brake switch is pressed.
(3) Press the Display switch to display the Screen Adjustment screen.

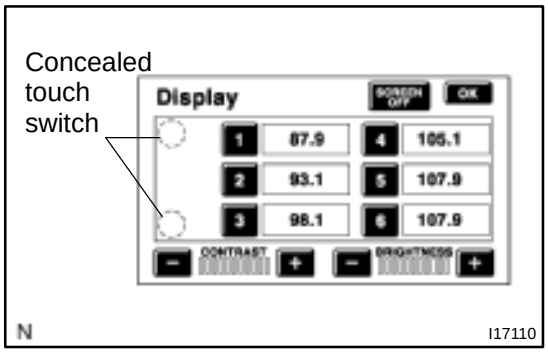

(4) Repeatedly touch the upper and lower bottom parts of the left end of the screen 3 times.

(c) FINISHING DIAGNOSIS SYSTEM MODE
Turn the ignition switch from ACC to OFF to finish the mode. If it is started by switch operation.

2. DIAGNOSIS SYSTEM MODE (w/ Navigation system)
(See page DI–789)

CLOCK

TROUBLESHOOTING

BE1UT–01

HINT:

Troubleshoot the clock according to the table below.

Troubleshooting	No.
Clock will not operate	1
Clock loses or gains time	2

± 1.5 seconds / day

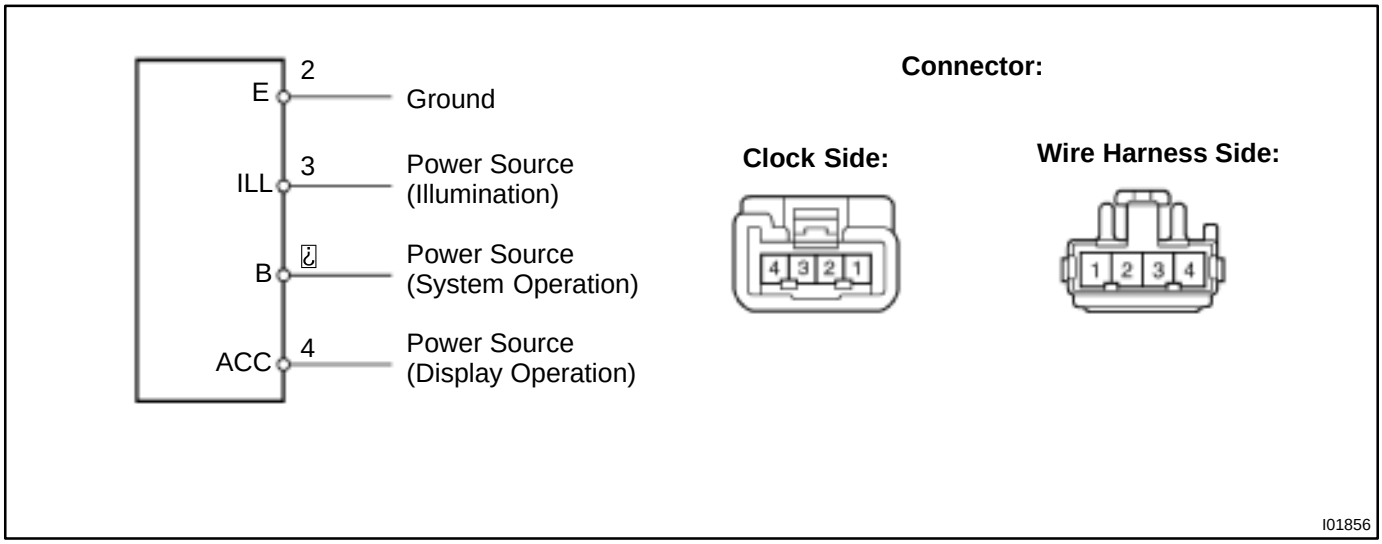

1. TROUBLESHOOTING No.1

1	**CLOCK WILL NOT OPERATE**

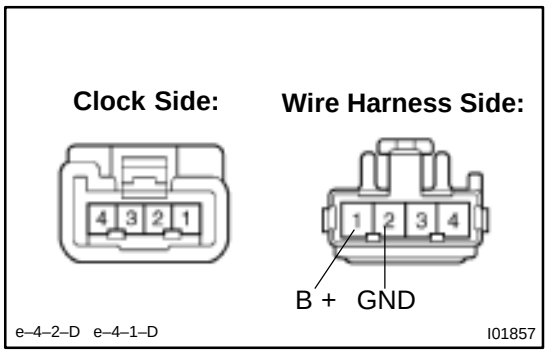

(a) Check that the battery positive voltage is 10 – 16 V.

If voltage is not as specified, replace the battery.

(b) Check that the DOME fuse is not blown.

If the fuse is blown, replace the fuse and check for short.

(c) Troubleshoot the clock as follows.

HINT:

Inspect the connector on the wire harness side.

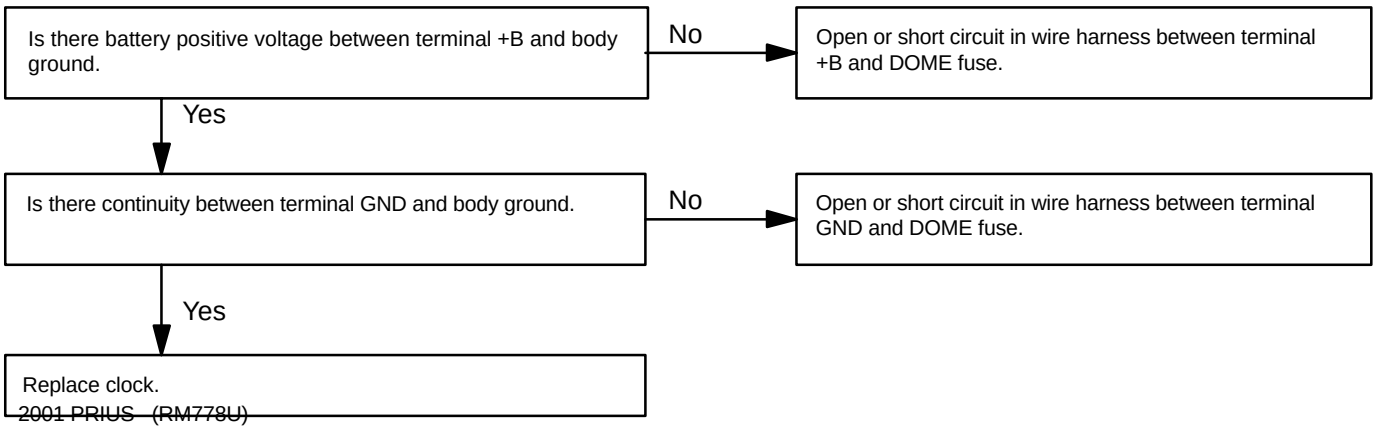

2. TROUBLESHOOTING NO.2

2	**CLOCK LOSES OR GAINS TIME**

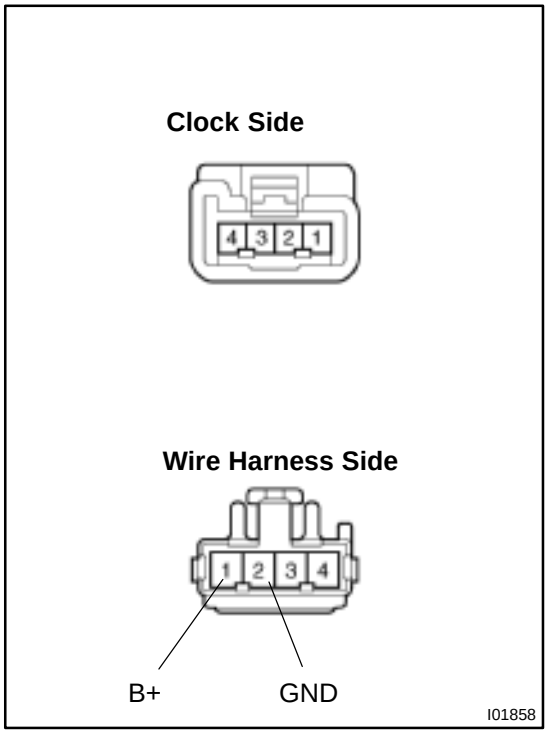

(a) Check that the battery positive voltage is 10 – 16 V.

If voltage is not as specified, replace the battery.

(b) Inspect the error of the clock.

Allowable error (per day): ± 1.5 seconds

If the error exceeds the allowable error, replace the clock.

(c) Check that the clock adjusting button is sticking in position and has failed to return.

If the error exceeds the allowable error, replace the clock.

(d) Troubleshoot the clock as follows.

HINT:

Inspect the connector on the wire harness side.

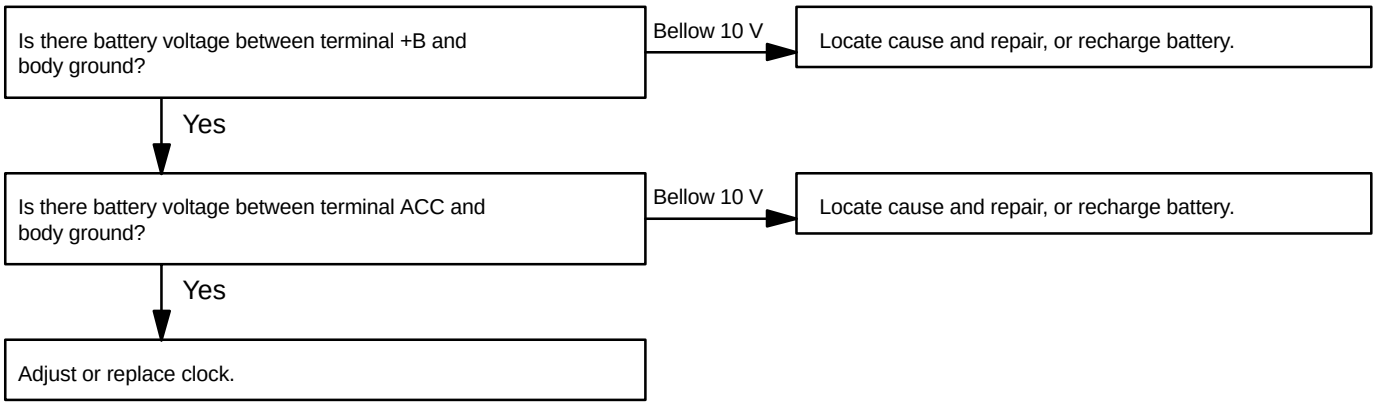

BE1W9–01

HYBRID VEHICLE IMMOBILISER SYSTEM

REGISTRATION PROCEDURE

1. THE COMMUNICATION BETWEEN THE HYBRID VEHICLE CONTROL ECU AND THE TRANSPONDER KEY ECU IS AS FOLLOWS

(a) When the ignition is turned ON, the transponder key ECU checks if the key is pre–registered or not and sends the check result to the hybrid vehicle control ECU.

(b) When the hybrid vehicle control ECU confirms that the key is pre–registered, it transmits its own ID (random numbers) to the transponder key ECU.

(c) Receiving the ID, the transponder key ECU calculates internally and sends the calculated result back to the hybrid vehicle control ECU.

(d) The hybrid vehicle control ECU rechecks the calculation inside the ECU.
When the calculation result corresponds to its own ID, this enables the engine to start.

2. PREASE DO THE FOLLOWING PROCEDURES WHEN YOU EXCHANGE TRANSPONDER KEY ECU

HINT:
When replacing the transponder key ECU or hybrid vehicle control ECU, start the engine after leaving it for more than 30 minutes with the ignition switch ON position.

(a) (Case 1):
Replace the transponder key ECU. →Register the new transponder key codes. →Leave more than 30 minutes with the ignition switch ON. →Start the engine.

(b) (Case 2):
Replace the hybrid vehicle control ECU. →Leave more than 30 minutes with the ignition switch ON. →Start the engine.

(c) (Case 3):
Replace the transponder key ECU and hybrid vehicle control ECU. →Register the new transponder key codes. →Start the engine.

3. IF ALL KEYS ARE LOST, OBSERVE THE FOLLOWING

(a) Purchase a new transponder key ECU and a new key.

(b) Replace the transponder key ECU with new one.

(c) Insert a new key into the key cylinder, turn the ignition switch ON and leave it as it is for 30 min.

4. SETTING HYBRID VEHICLE IMMOBILISER SYSTEM

(a) Removing a key from the key cylinder sets hybrid vehicle immobiliser system.

(b) When 20 sec is elapsed after the key is turned from ignition switch ON to ACC or LOCK, the hybrid vehicle immobiliser is set.

5. UNSETTING HYBRID VEHICLE IMMOBILISER SYSTEM

Insert a key into the key cylinder
(Under this condition, transponder key ECU starts communication with the transponder chip built in the key. When the ID code in the chip coincides with that registered in ECU consecutively 2 times, the hybrid vehicle immobiliser system is reset).

6. KEY REGISTRATION IN AUTOMATIC REGISTRATION MODE

(a) Registration of a new transponder key.

HINT:

- This must be done when you install a new transponder key ECU.
- It is possible to register up to 2 master key codes and a sub key code.
- In the automatic registration mode, the last key registered becomes sub–key.

(b) Initial condition: Battery connected, no key in key cylinder.

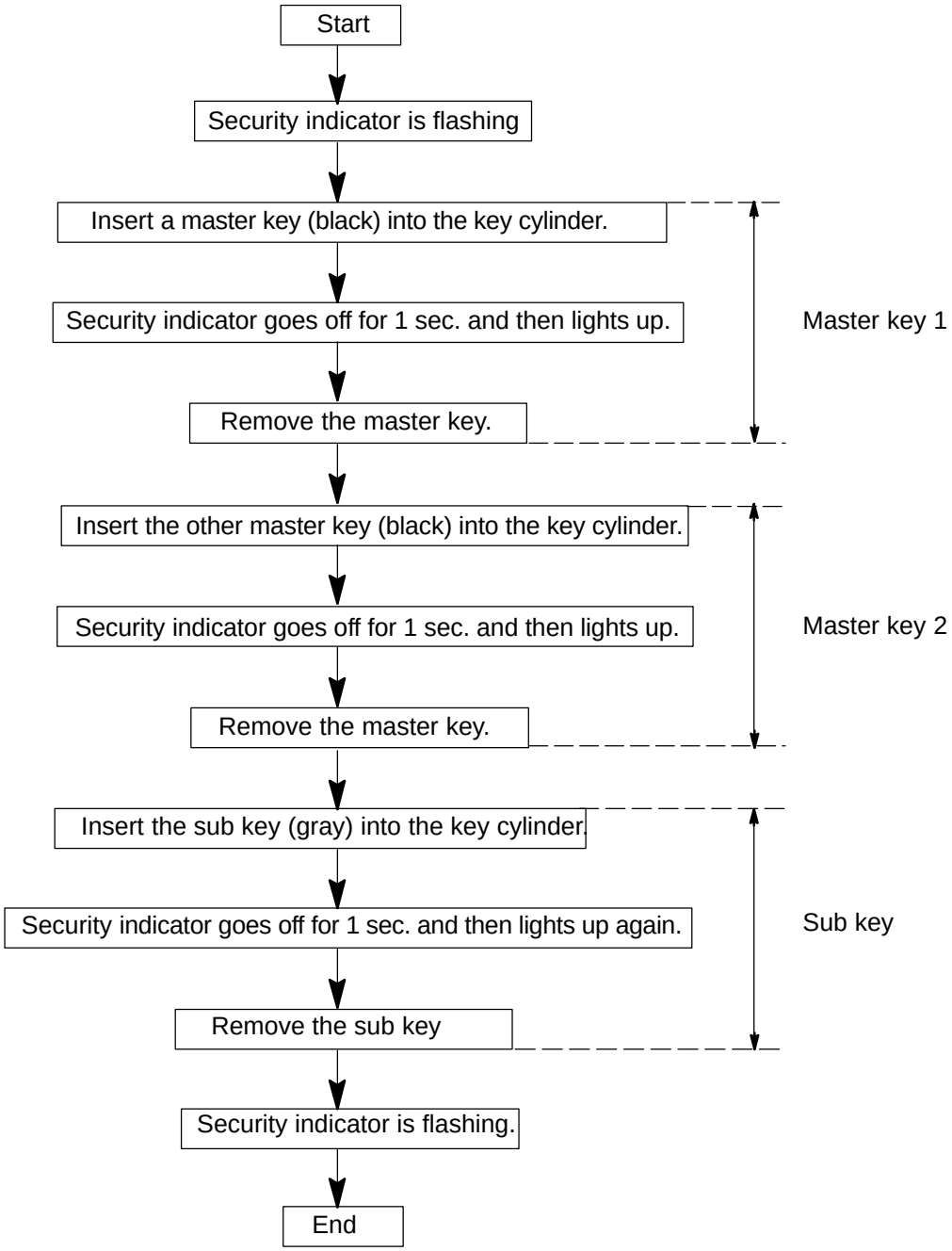

HINT:

- When a key is not inserted in the key cylinder on the automatic registration mode, the security indicator always lights on.
- When the immobiliser system operates normally and the key is pull out, the security indicator blinks.
- When key code registration could not be performed on the automatic registration mode, code 2–1 is output from the security indicator and when inserting the already registered key, code 2–2 is output.

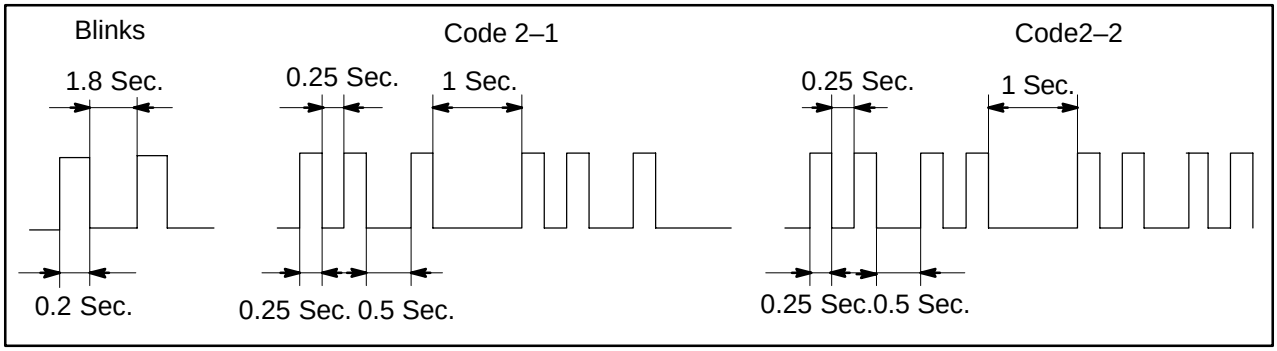

(c) Automatic registration mode completion

If completing the mode forcibly when more than 1 key code have been registered on the automatic registration mode, perform the following procedures.

After 1 more key code have been registered with master key, turn the ignition switch from LOCK to ON 5 times within 10 secs. after inserting the already registered key or without pulling the key out.

7. REGISTERING MASTER KEY

Initial condition: All doors closed, not key in cylinder.

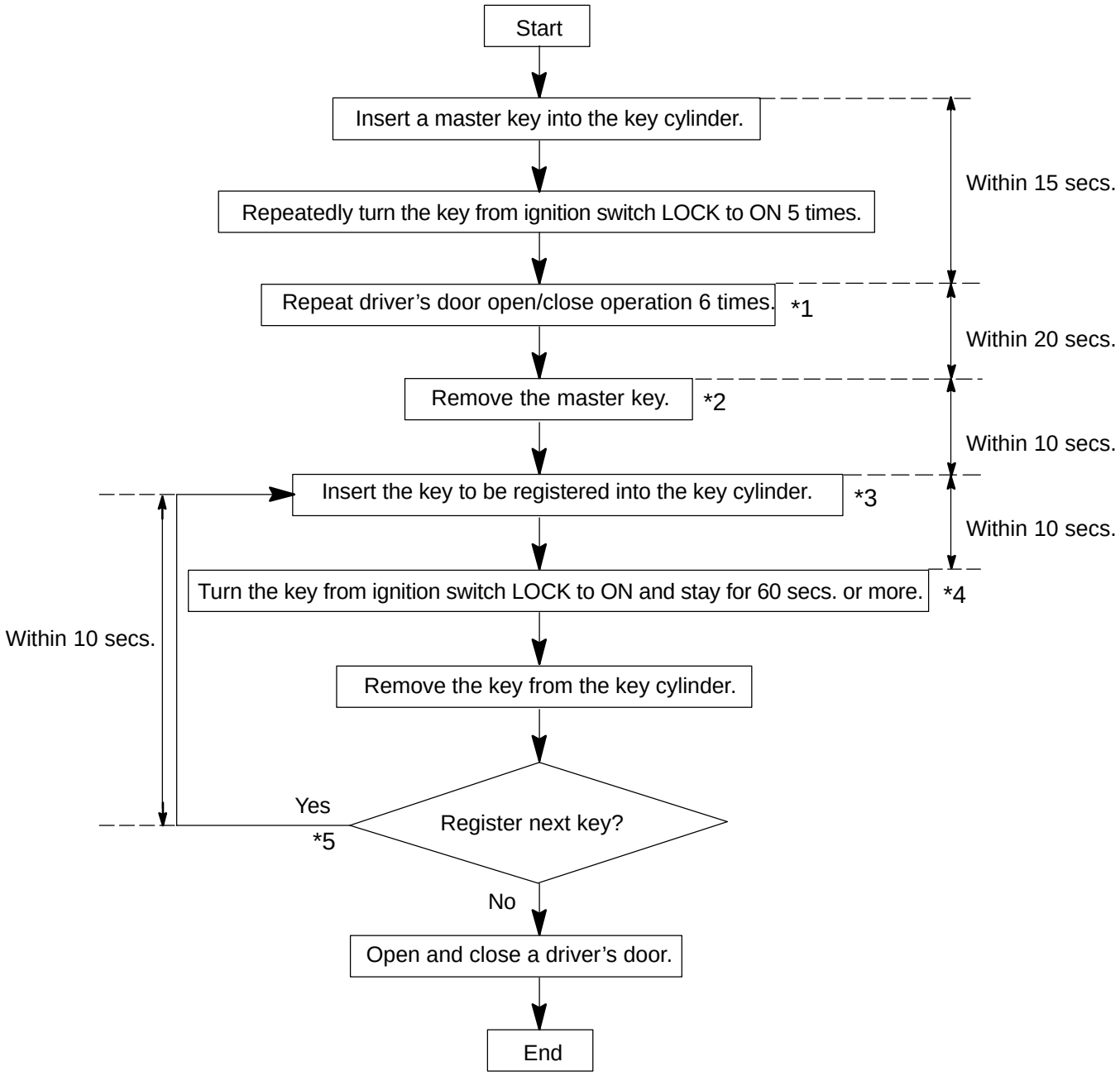

*1: The 1 st door's open/close operation should be within 15 sec after key insertion.
*2: Remove the key within 20 sec. after the 1 st door's open/close operation.
*3: Insert the key within 10 sec. after preceding key removal.
*4: Turn the key from ignition switch LOCK to ON within 10 sec. after key insertion.
*5: If registering the other key, insert it into the key cylinder within 10 sec.

8. REGISTERING SUB–KEY

Initial condition: All doors closed, not key in cylinder.

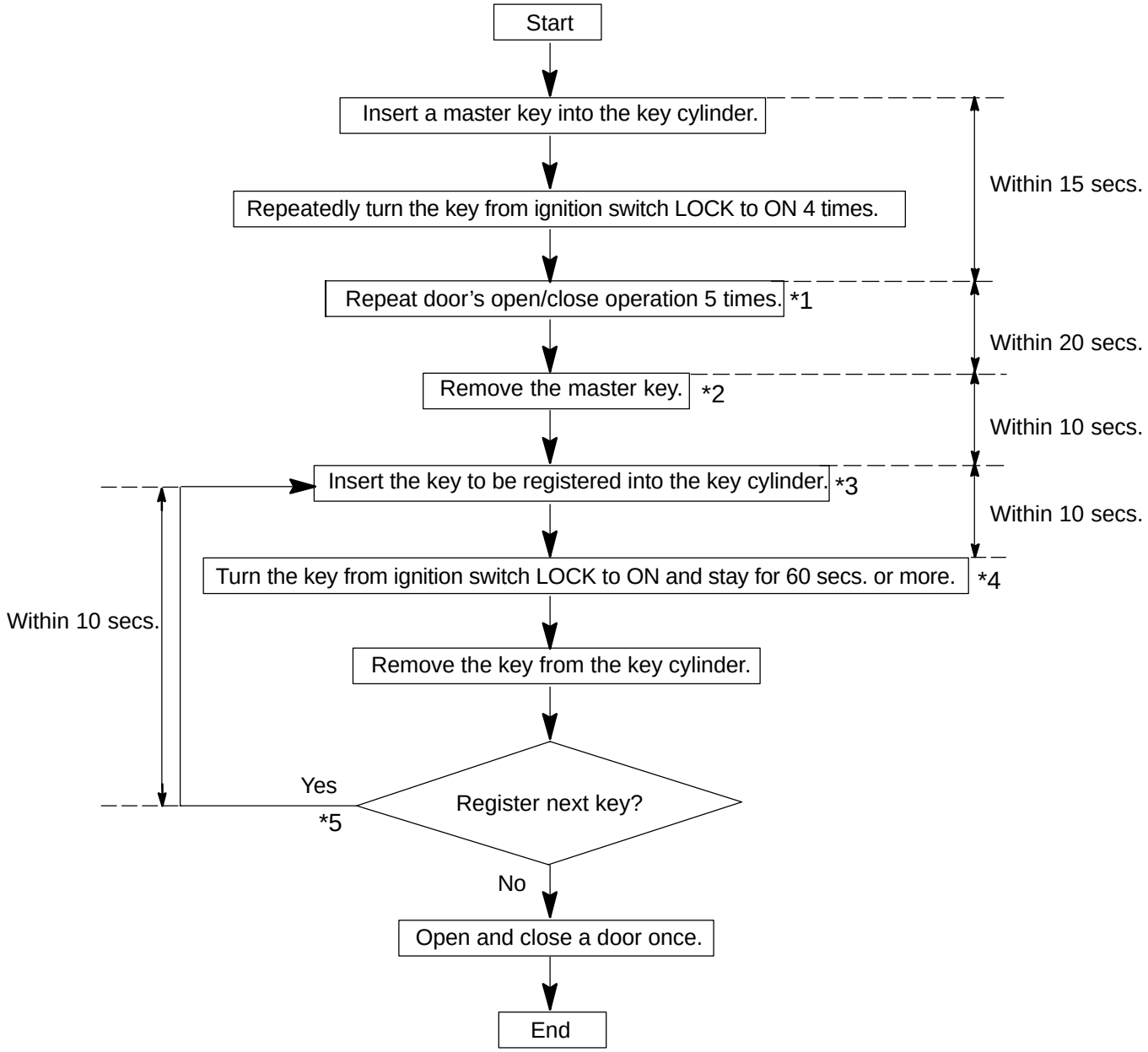

*1: The 1 st door's open/close operation should be within 15 sec after key insertion.
*2: Remove the key within 20 sec. after the 1 st door's open/close operation.
*3: Insert the key within 10 sec. after preceding key removal.
*4: Turn the key from ignition switch LOCK to ON within 10 sec. after key insertion.
*5: If registering the other key, insert it into the key cylinder within 10 sec.

9. ERASURE OF TRANSPONDER KEY CODE

(a) Do this operation to erase transponder key registration from the transponder key ECU.

HINT:

Delete all other master and sub–key codes leaving the master key code to use the operation. When using the key which was used before deletion, it is necessary to register the code again.

(b) Initial condition: All doors closed, not key in cylinder.

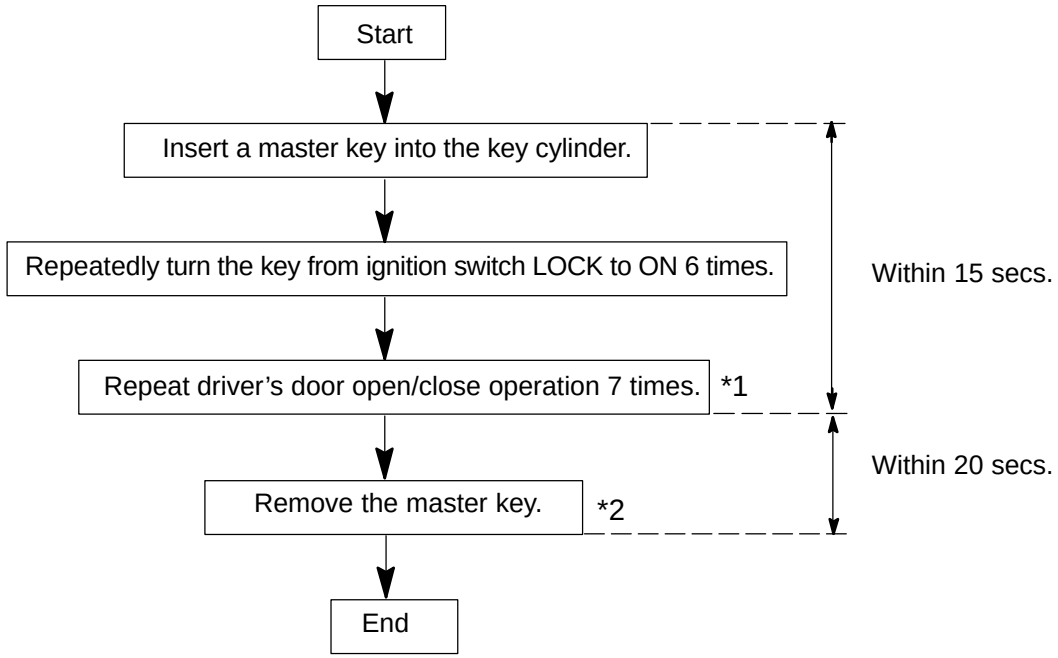

*1: The 1 st door's open/close operation should be done within 15 sec after key insertion.
*2: Remove the key within 20 sec. after the 1 st door's open/close operation.

BE1WC–01

PRE–CHECK

1. TRANSPONDER KEY ECU INPUT CONDITION DISPLAY READ CODE

(a) Connect the positive (+) lead from the volt meter (Analog Type) to OP1 of the check connector and the negative (–) lead to E1 of the check connector.

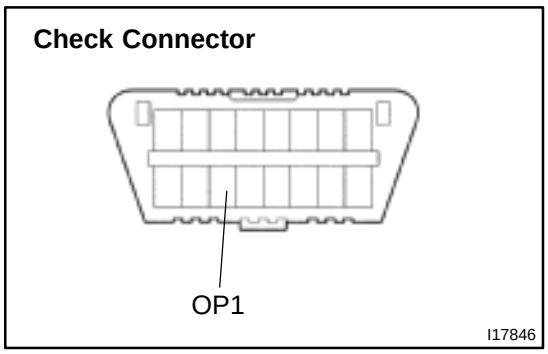

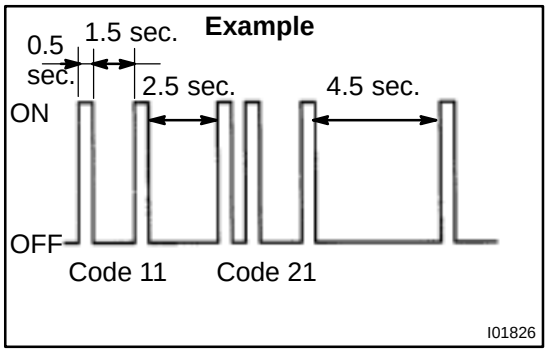

(b) Insert the ignition key in the key cylinder.

(c) Read the code from the movement of the tester needle.

If no code is output, turn the ignition switch ON.

If a code is now output, check if the DOME fuse is blown.

HINT:

- The code can be read using a luminous diode (Recommend activation current 10 – 20 mA) instead of a tester.
- A digital tester can also be used.

Display condition:

- When there are multiple codes, they are output in order staring from the lowest code.
- After all the codes are output, Lo is displayed for 4.5 secs., then all the code are output again starting from the lowest code.
- If the situation changes during code output, Lo is output for 4.5 secs. after output of the current code ceases, then the codes are output again starting from the lowest code. E.g. while 11 (out of 11 and 21) is being output, conditions change and 12 is added. So after 11 is output, Lo is output for 4.5 secs., then 11, 12 and 21 are output.

2. TRANSPONDER KEY ECU INPUT CONDITION DISPLAY CODE LIST

Code	Output condition
11	Key unlock warning switch ON (Ignition key inserted)
12	Any door is open. (Door courtesy switch ON)
13	Ignition switch at ON position
21	Master key is inserted in key cylinder and the immobiliser system is OFF.
22	Sub key is inserted in key cylinder and immobiliser system is OFF.
31	Key code recorded in transponder key ECU differs from code of key inserted in key cylinder.
32	Transponder key code cannot be read.
33	Key code cannot be read because format of chip inside key is wrong.
34	Transponder key ECU has no memory space to register key code.
52	Hibrid vehicle control ECU is unlocked.

53	Hibrid vehicle control ECU code is error.
54	Hibrid vehicle control ECU is check–sum error.
55	Hibrid vehicle control ECU is factory code initialling.
58	No response from hibrid vehicle control ECU

3. TRANSPONDER KEY ECU INPUT CONDITION DISPLAY MALFUNCTION LIST

Symptom	Cause
No code is output.	1. DOME Fuse 2. Wire harness or connector 3. Transponder key ECU
Even when key is inserted in key cylinder, Code 11 is not output.	1. Key unlock warning switch 2. Wire harness or connector 3. Transponder key ECU
Code 12 is not output when the door is open.	1. Door courtesy switch 2. Wire harness or connector 3. Transponder key ECU
Code 13 is not output when ignition switch ON.	1. IGN Fuse 2. Wire harness or connector 3. Transponder key ECU
Code 31 is not output when key is inserted in key cylinder.	Key code is not registered.
Code 32 is output.	1. Transponder key coil 2. Transponder key ECU 3. Wire harness or connector
Code 33 is output.	Transponder key ECU
Code 34 is output.	Transponder key ECU has no memory space to register key code.
Code 51–58 is output.	1. Hibrid vehicle control ECU 2. Transponder key ECU

4. TROUBLE SHOOTING

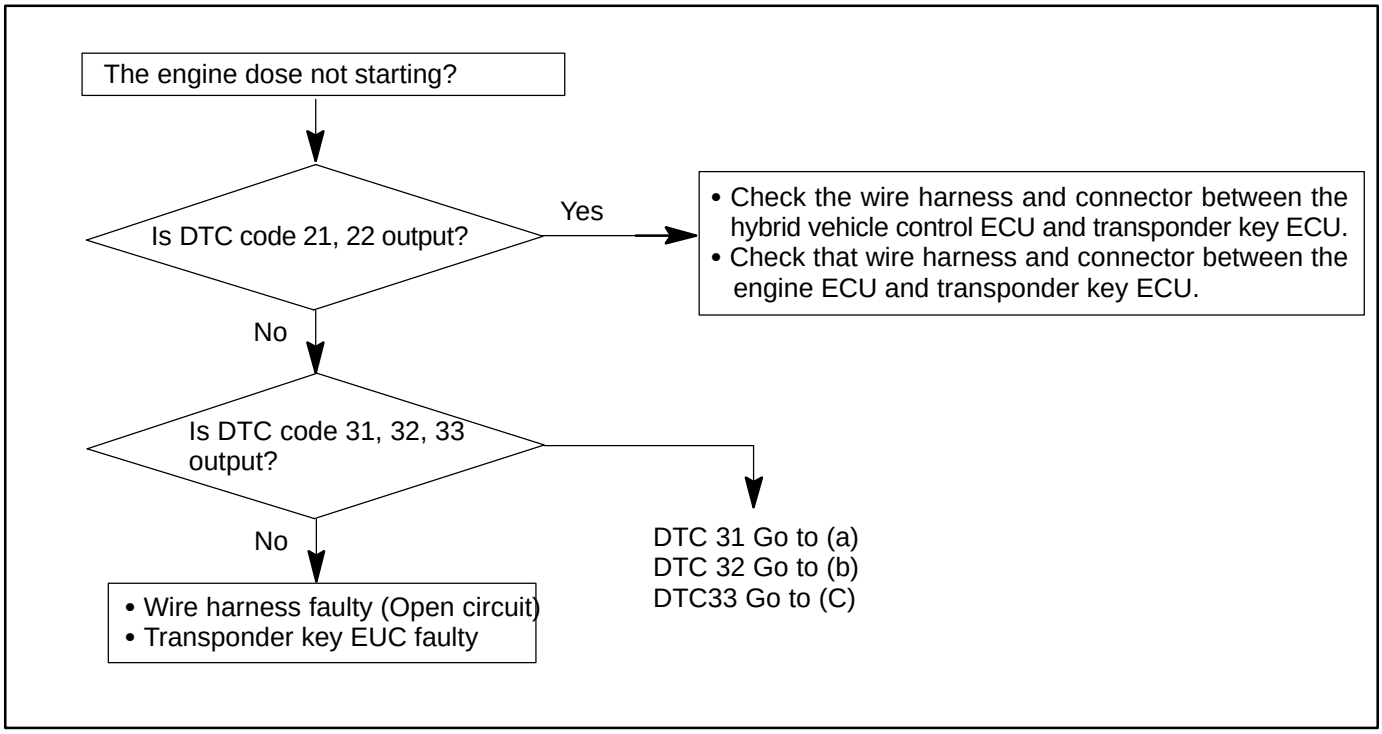

- If code 31 is output, troubleshoot according to this flow chart.

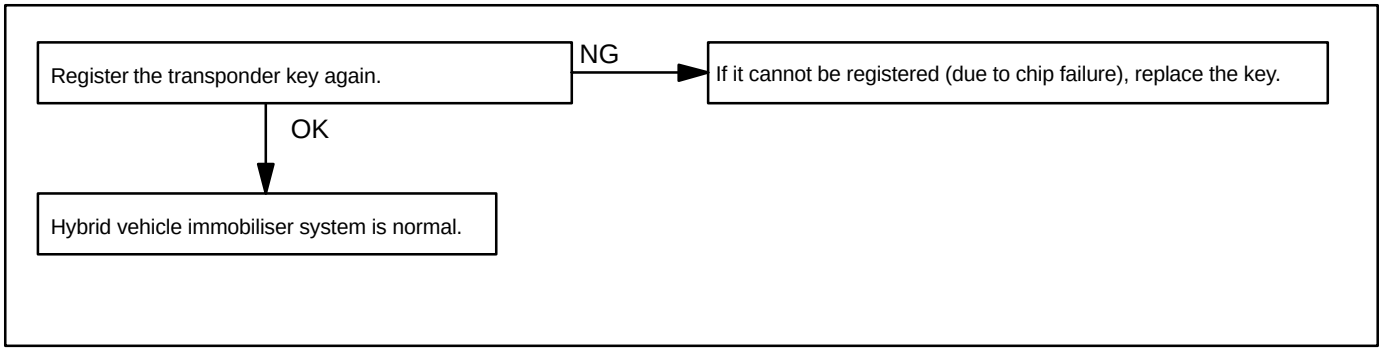

- If code 32 is output, troubleshoot according to this flow chart.

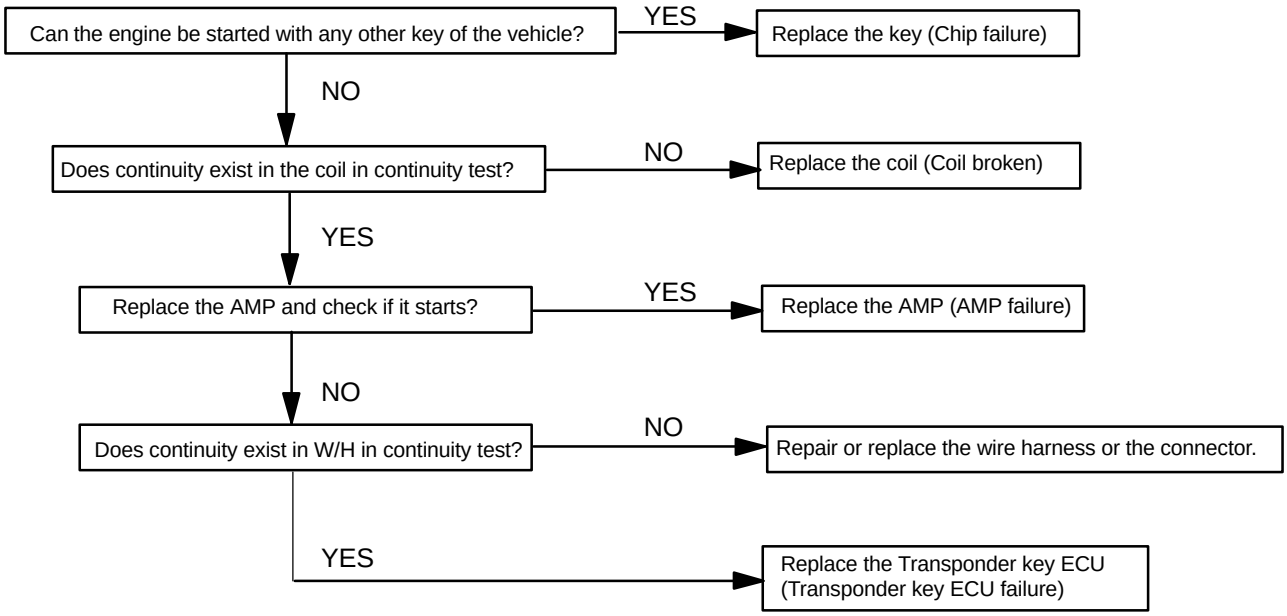

- If code 33 is output, troubleshoot according to this flow chart.

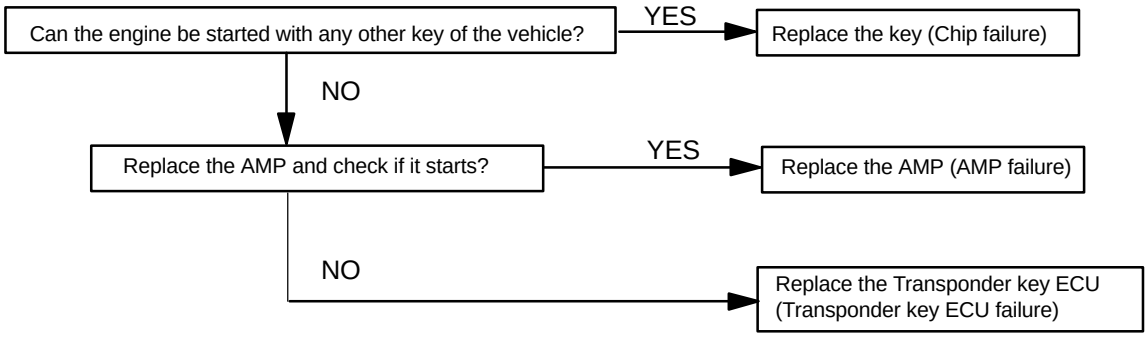

BE0FZ–14

INSPECTION

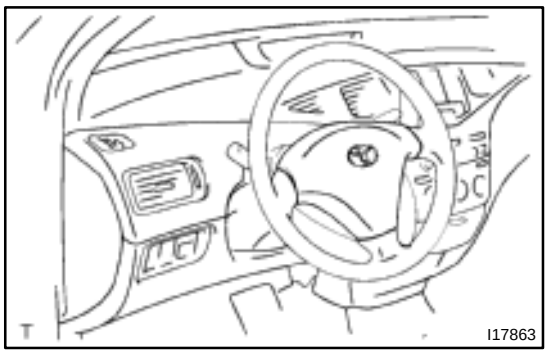

1. INSPECT HORN SWITCH

(a) Disconnect the negative (–) terminal from the battery.
(b) Remove the left and right covers from the steering wheel.
(c) Using a torx socket wrench, loosen the 2 bolts.
(d) Pull up the horn pad and place it on the steering column, as shown.

HINT:

Do not disconnect the connector from the horn pad.

(e) Disconnect the connector from the slip ring.

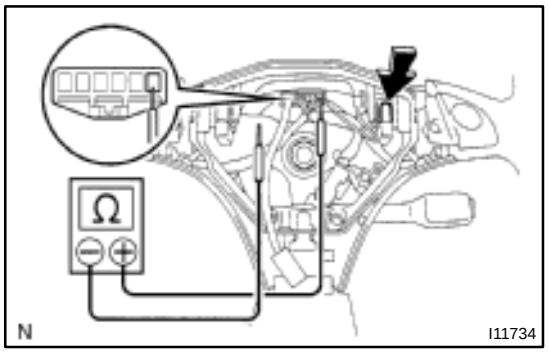

(f) Check that no continuity exists between terminal 6 of the connector and body ground.
(g) Check that continuity exists between terminal 6 of the connector and body ground when the horn contact plate is pressed against the steering spoke assembly.

If continuity is not as specified, repair or replace the steering wheel or wire harness as necessary.

(h) Install the horn pad in place and using a torx socket wrench, torque the 2 bolts.
Torque: 7.1 N·m (72 kgf·cm, 62 in.·lbf)
(i) Install the left and right covers.
(j) Connect the negative (–) terminal to the battery.

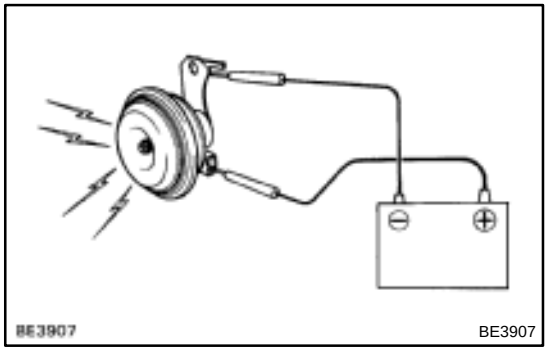

2. INSPECT HORN OPERATION

Connect the positive (+) lead from the battery to the terminal and negative (–) lead to the horn body and check that the horn blows.

If operation is not as specified, replace the horn.

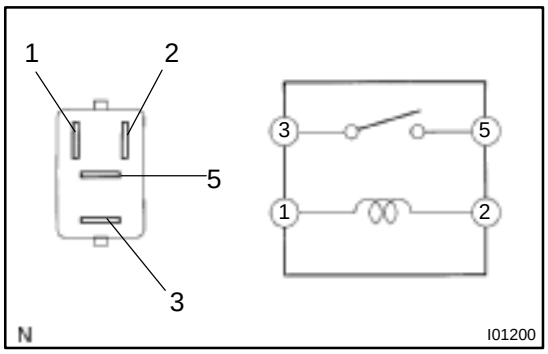

3. INSPECT HORN RELAY CONTINUITY

Condition	Tester connection	Specified condition
Constant	1 – 2	Continuity
Apply B+ between terminals 1 and 2.	3 – 5	Continuity

If continuity is not as specified, replace the relay.

CLIP

BO0ZO–06

REPLACEMENT

The removal and installation methods of typical clips used in body parts are shown in the table below.
HINT:
If the clip is damaged during the operation, always replace it with a new clip.

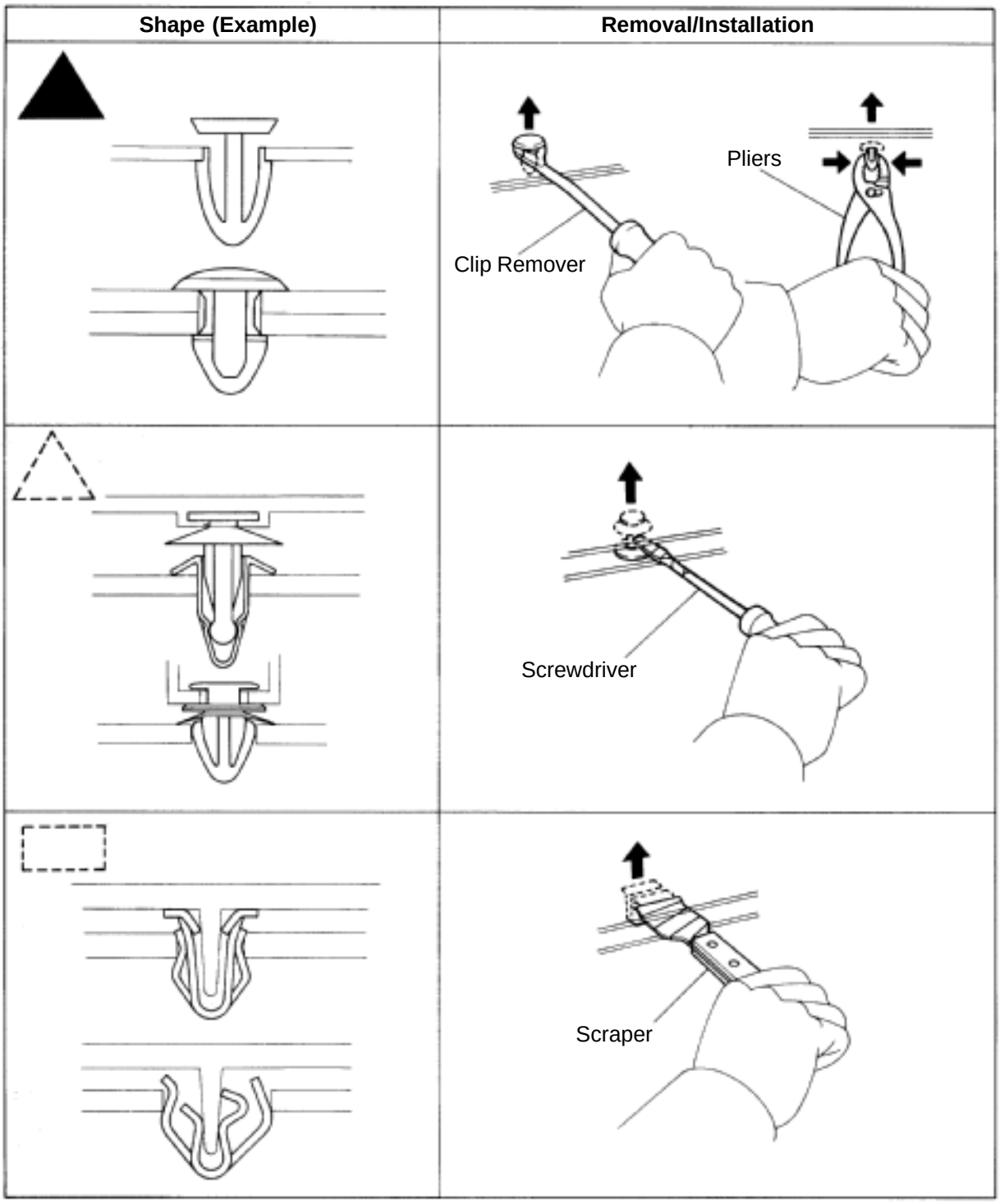

V00005

Shape (Example)	Removal/Installation
	Removal Installation 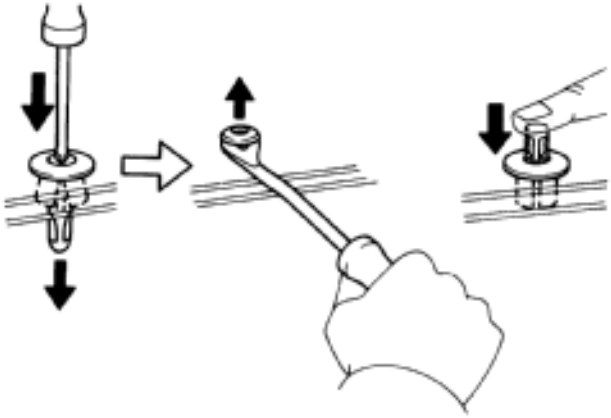
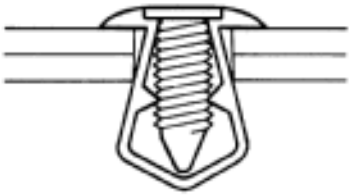	Removal Installation 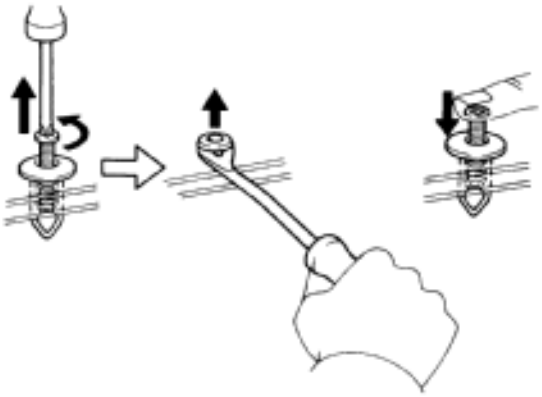

V00012

SRS AIRBAG

BO0XI–05

PRECAUTION

The PRIUS is equipped with an SRS (Supplemental Restraint System) such as the driver airbag, front passenger airbag and side airbag. Failure to carry out service operation in the correct sequence could cause the SRS to unexpectedly deploy during servicing, possibly leading to a serious accident. Before servicing (including removal or installation of parts, inspection or replacement), be sure to read the precautionary notices in the RS section.

BO3QK–01

DISASSEMBLY

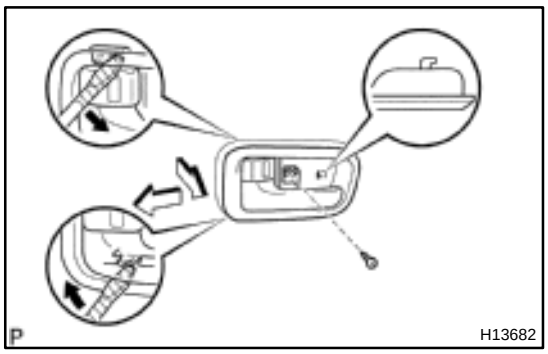

1. REMOVE INSIDE HANDLE BEZEL

(a) Using a screwdriver, open the screw cap.

HINT:

Tape the screwdriver tip before use.

(b) Remove the screw.

(c) Using a screwdriver, remove the inside handle bezel as shown in the illustration.

HINT:

Tape the screwdriver tip before use.

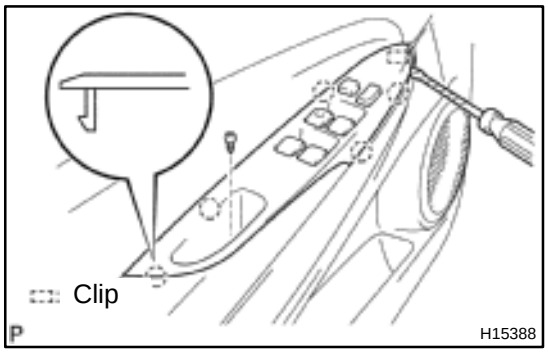

2. REMOVE POWER WINDOW SWITCH

(a) Remove the screw.

(b) Using a screwdriver, remove the power window switch.

HINT:

Tape the screwdriver tip before use.

(c) Disconnect the connectors.

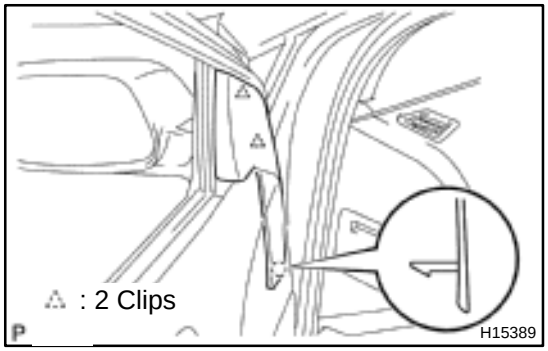

3. REMOVE LOWER FRAME BRACKET GARNISH

(a) Using a screwdriver, remove the lower frame bracket garnish.

HINT:

Tape the screwdriver tip before use.

(b) Remove the front flame cover.

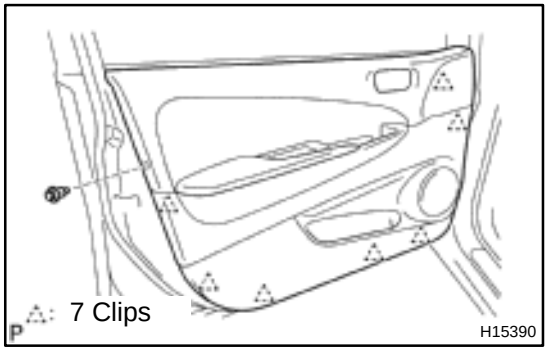

4. REMOVE DOOR TRIM

(a) Remove the clip.

(b) Insert a screwdriver between the door panel and door trim to pry the trim out.

NOTICE:

Be careful not damage the door panel and trim.

HINT:

Tape the screwdriver tip before use.

(c) Pull the door trim upward to remove it.

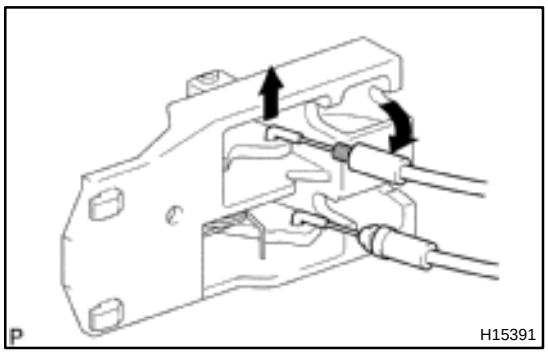

5. REMOVE INSIDE HANDLE

Remove the screw and inside handle, disconnect the 2 cables from the inside handle as shown in the illustration.

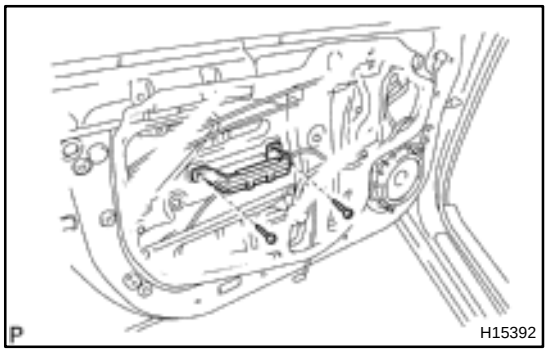

6. REMOVE SERVICE HOLE COVER

(a) Remove the 2 screws and door trim No. 1 bracket.
(b) Remove the 2 grommets.
(c) Remove the service hole cover.

NOTICE:

Do not tear the cover.

HINT:

- At the time of reassembly, please refer to the following item.
- Bring out the 2 control cables and wire harness through the service hole cover.

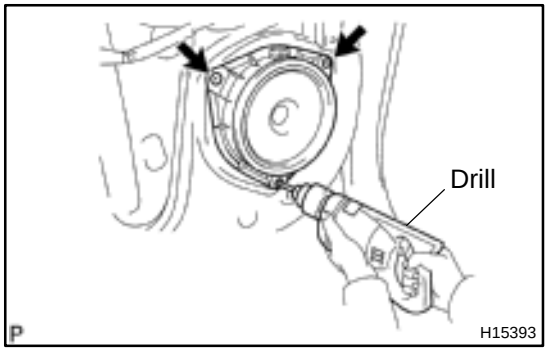

7. REMOVE SPEAKER

(a) Disconnect the connecter.
(b) Using a drill of less then ø 4 mm (0.16 in), drill out the rivet heads and remove the speaker.
(c) Gently and vertically put the drill to the rivet, and cut the rivet flanges.

NOTICE:

- **Prizing the hole with a drill can lead to damage to the rivet hole or breaking the drill.**
- **Take cafe as the cut rivet is hot.**

(d) Even if flange is taken off, continue drilling and push out remaining fragments will the drill.
(e) Using a vacuum cleaner, remove the drilled rivet and their dust from the inside of the door.

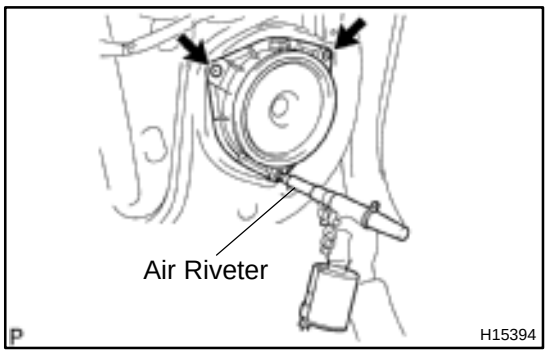

HINT:
At the time of reassembly, please refer to the following item.
Using an air riveter and nose piece No.1, strike rivets into the door panel to install the speaker to the door panel.

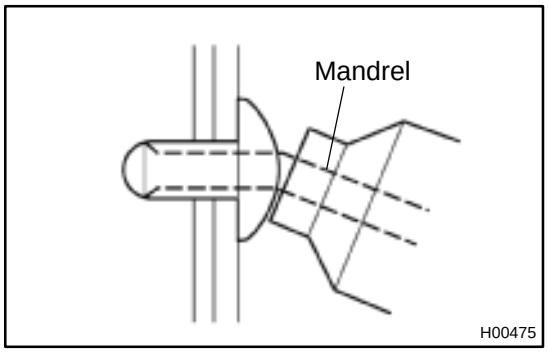

NOTICE:
At the time of reassembly, please refer to the following item.
If the rivet is not positioned perpendicularly it will bend the mandrel. When the trigger is then pulled, it may damage the air riveter.

8. REMOVE OUTSIDE VIEW MIRROR

(a) Disconnect the connecter.
(b) Remove the 3 nuts andout side view mirror.
Torque: 7.8 N·m (80 kgf·cm, 69 in.·lbf)

9. REMOVE DOOR BELT MOULDING

Using a scraper, remove the door belt moulding.
HINT:
Tape the scraper tip before use.

10. REMOVE DOOR LOCK SILENCER

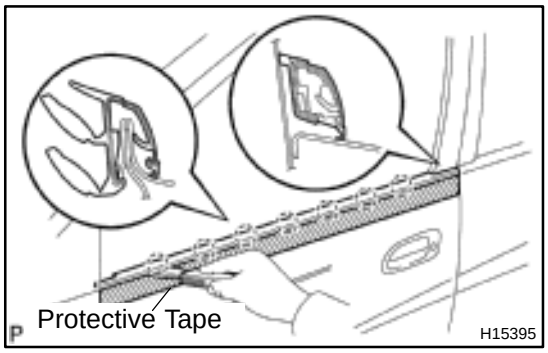

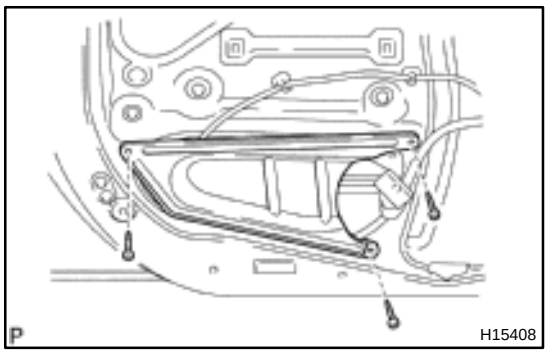

11. REMOVE DOOR GLASS

(a) Remove the 3 bolts and reinforce inside extension.

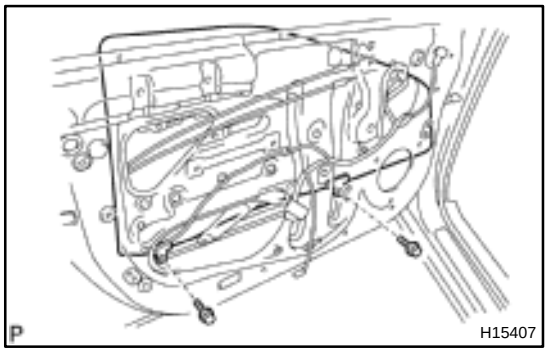

(b) Open the door glass until the door belts appear in the service hole.
(c) Remove the 2 bolts.

NOTICE:
Be careful not to drop the door glass.

(d) Pull the door glass upward to remove it.

12. REMOVE DOOR GLASS RUN

13. REMOVE LOWER FLAME

Remove the 2 nuts, plate and lower flame.

14. REMOVE WINDOW REGULATOR

(a) Disconnect the connector.

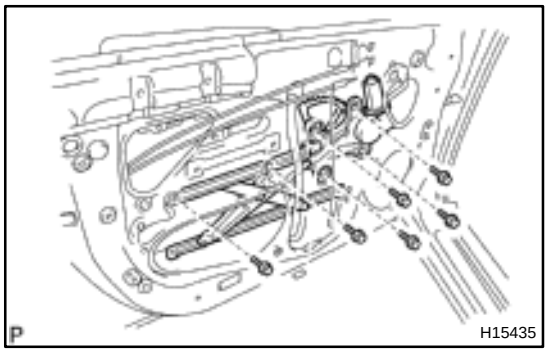

(b) Remove the 2 bolts from the window regulator.
Torque: 4.9 N·m (50 kgf·cm, 43 in.·lbf)

(c) Remove the 4 bolts and window regulator.
Torque: 8.3 N·m (85 kgf·cm, 74 in.·lbf)

HINT:

At the time of reassembly, please refer to the following item.

Apply MP grease to the window regulator.

NOTICE:

At the time of reassembly, please refer to the following item.

Do not apply grease to the spring of the window regulator.

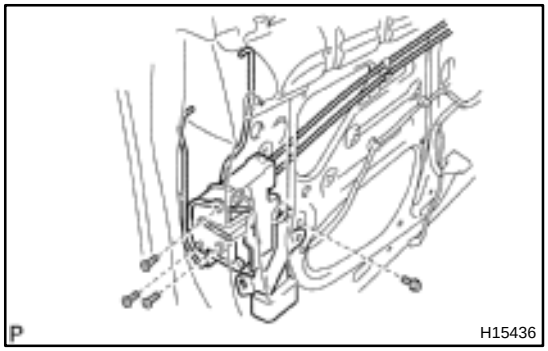

15. REMOVE DOOR LOCK

(a) Disconnect the control cable from the clamp.

(b) Disconnect the 2 links from the outside handle and key cylinder.

(c) Disconnect the connecter.

(d) Remove the bolt.
Torque: 4.9 N·m (50 kgf·cm, 43 in.·lbf)

(e) Remove the 3 screws and door lock.
Torque: 4.9 N·m (50 kgf·cm, 43 in.·lbf)

HINT:

At the time of reassembly, please refer to the following item.

- Apply adhesive to the 3 screws.
Part No. 08833–00070, THREE BOND 1324 or equivalent

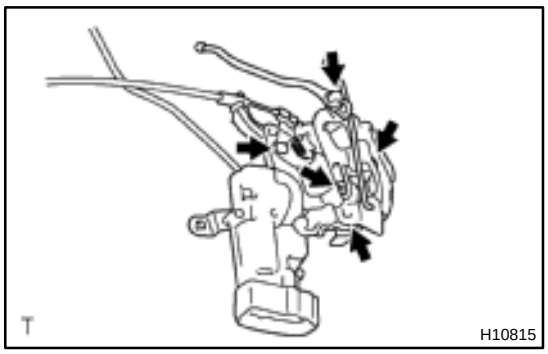

- Apply MP grease to the sliding and rotating parts of the door lock.

16. REMOVE OUTSIDE HANDLE

(a) Remove the 2 bolts and outside handle.
Torque: 5.4 N·m (55 kgf·cm, 48 in.·lbf)

(b) Remove the key cylinder from the handle.

BO3QO–01

DISASSEMBLY

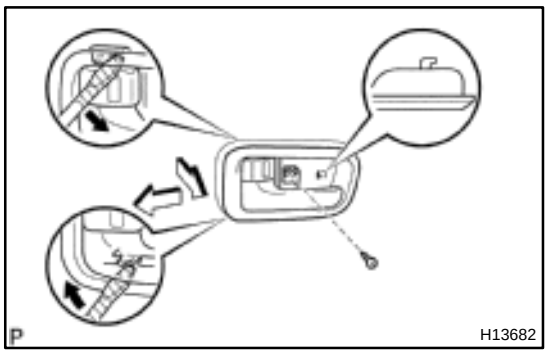

1. REMOVE INSIDE HANDLE BEZEL

(a) Using a screwdriver, open the screw cap.

HINT:

Tape the screwdriver tip before use.

(b) Remove the screw.

(c) Using a screwdriver, remove the inside handle bezel as shown in the illustration.

HINT:

Tape the screwdriver tip before use.

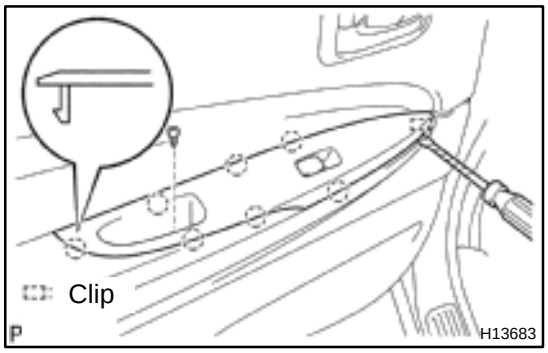

2. REMOVE POWER WINDOW SWITCH

(a) Remove the screw.

(b) Using a screwdriver, remove the power window switch.

HINT:

Tape the screwdriver tip before use.

(c) Disconnect the connector.

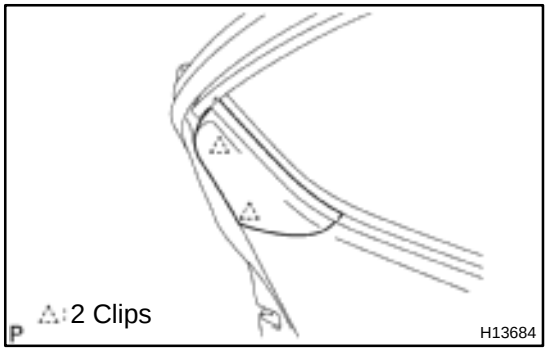

3. REMOVE REAR DOOR LOWER BRACKET GARNISH

Using a screwdriver, remove the rear door lower bracket garnish.

HINT:

Tape the screwdriver tip before use.

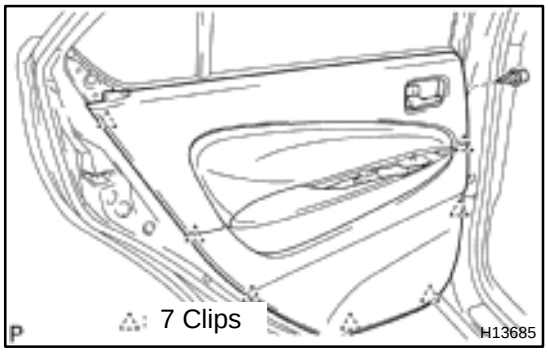

4. REMOVE DOOR TRIM

(a) Remove the clip.

(b) Insert a screwdriver between the door panel and door trim to pry the trim out.

NOTICE:

Be careful not to damage the door panel and trim.

HINT:

Tape the screwdriver tip before use.

(c) Pull the trim upward to remove it.

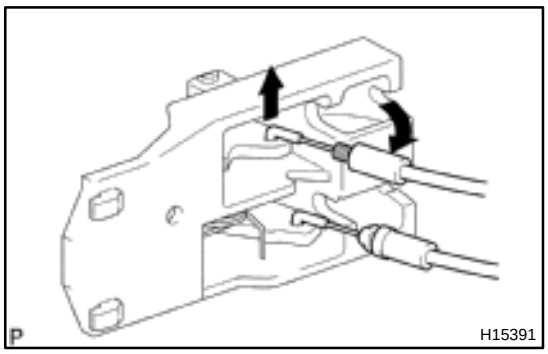

5. REMOVE INSIDE HANDLE

Remove the screw and inside handle, disconnect the 2 cables from the inside handle as shown in the illustration.

6. REMOVE DOOR TRIM BRACKET NO. 1

Remove the 2 screws and door trim bracket, then remove the 2 grommets.

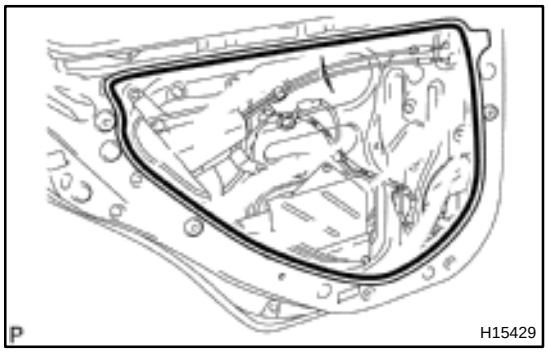

7. REMOVE SERVICE HOLE COVER

Remove the service hole cover.

NOTICE:

Do not tear the cover.

HINT:

At the time of reassembly, please refer to the following item.

Bring out the 2 control cables and wire harness through the service hole cover.

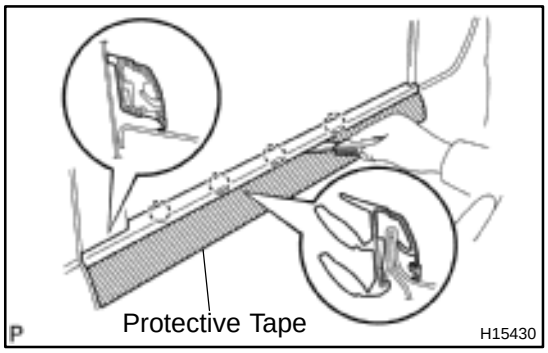

8. REMOVE DOOR BELT MOULDING

Using a scraper, remove the door belt moulding.

HINT:

Tape the scraper tip before use.

9. REMOVE DOOR LOCK LINK SILENCER

10. REMOVE DOOR GLASS RUN

11. REMOVE WEATHERSTRIP

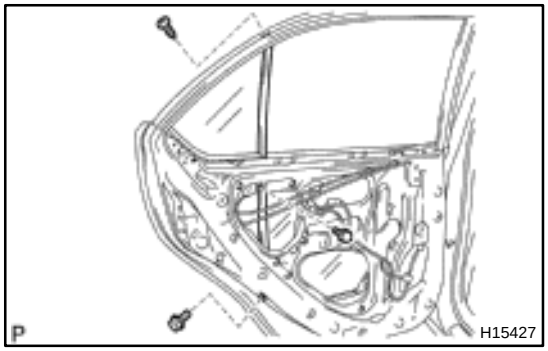

12. REMOVE DIVISION BAR

(a) Remove the 2 bolts and screw.

(b) Pull the division bar forward.

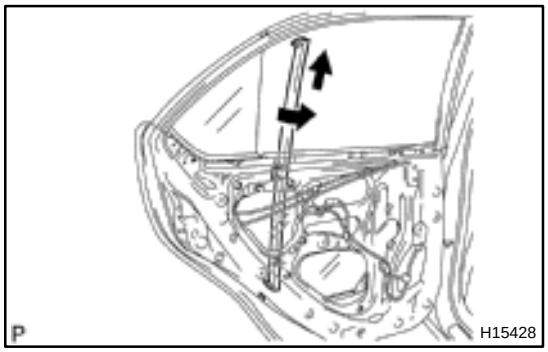

(c) Rotate the division bar 90° and pull it upward as shown in the illustration.

13. REMOVE QUARTER WINDOW GLASS

(a) Remove the quarter window glass with the weatherstrip.

(b) Remove the weatherstrip from the quarter window glass.

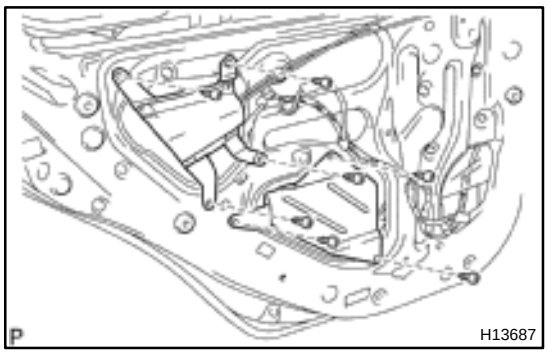

14. REMOVE INSIDE PANEL PLATE

Remove the 3 screws and inside panel plate.

15. REMOVE INSIDE PANEL REINFORCEMENT

Remove the 4 screws and inside panel plate.

16. REMOVE DOOR GLASS

(a) Side out the door glass from the window regulator.

NOTICE:

Be careful not to drop the door glass.

(b) Pull the door glass upward to remove it.

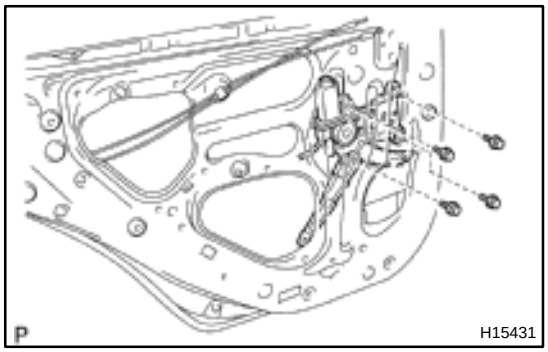

17. REMOVE WINDOW REGULATOR

Disconnect the connector, then remove the 4 bolts and window regulator.

Torque: 5.4 N·m (55 kgf·cm, 48 in.·lbf)

HINT:

Remove the regulator through the service hole.

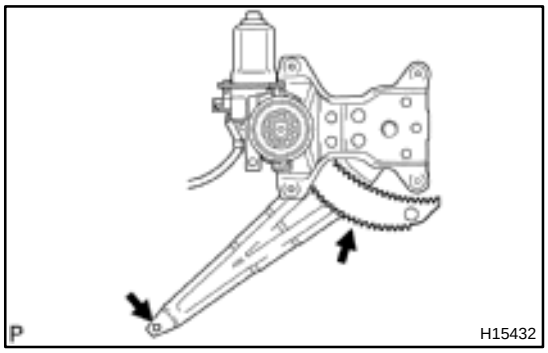

HINT:

At the time of reassembly, please refer to the following item.

Apply MP grease to the window regulator.

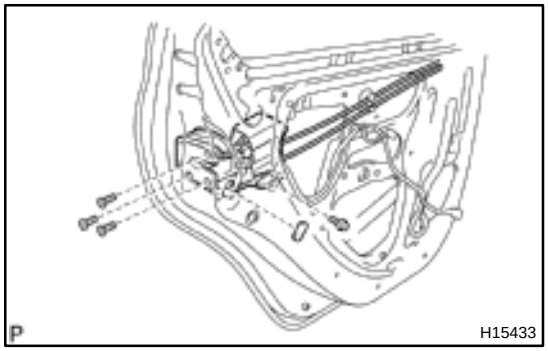

18. REMOVE DOOR LOCK

(a) Remove the child protection cover.

(b) Disconnect the connector.

(c) Using a screwdriver, remove the door lock link guide and clamp.

HINT:

Tape the screwdriver tip before use.

(d) Remove the 3 screws.

Torque: 4.9 N·m (50 kgf·cm, 43 in.·lbf)

HINT:

At the time of reassembly, please refer to the following item.

Apply adhesive to the 3 screws.

Part No. 08833–00070, THREE BOND 1324 or equivalent

(e) Remove the bolts.

(f) Remove the door lock through the service hole.

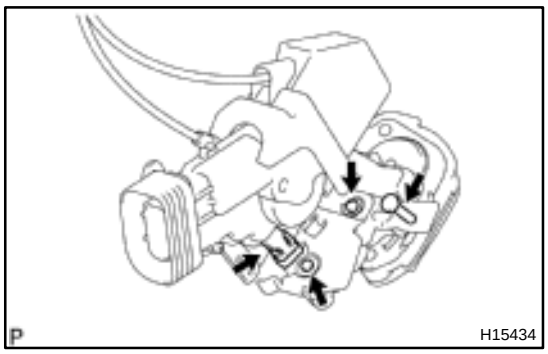

HINT:

At the time of reassembly, please refer to the following item.

Apply MP grease to the sliding and rotating parts of the door lock.

19. REMOVE OUTSIDE HANDLE

(a) Remove the 2 bolts.

Torque: 5.4 N·m (55 kgf·cm, 48 in.·lbf)

(b) Remove the outside handle and key cylinder.

BO3QS–01

REMOVAL

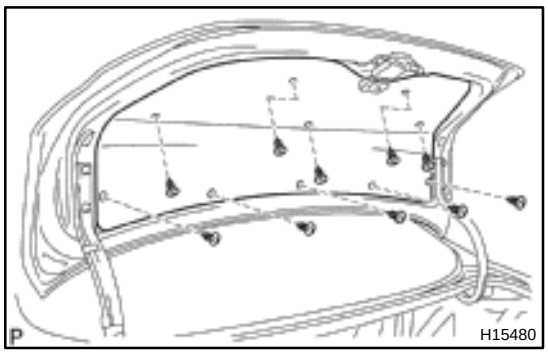

1. REMOVE LUGGAGE COMPARTMENT DOOR TRIM

Remove the 10 clips and luggage compartment door trim.

2. REMOVE LUGGAGE COMPARTMENT DOOR LOCK

(a) Remove the 2 bolts and luggage compartment door lock.
Torque: 5.4 N·m (55 kgf·cm, 48 in.·lbf)

(b) Disconnect the link and cable from the lock.

3. REMOVE LUGGAGE COMPARTMENT DOOR OUTER GARNISH

(a) Remove the 4 nuts.

(b) Remove the luggage compartment door outer garnish and key cylinder.

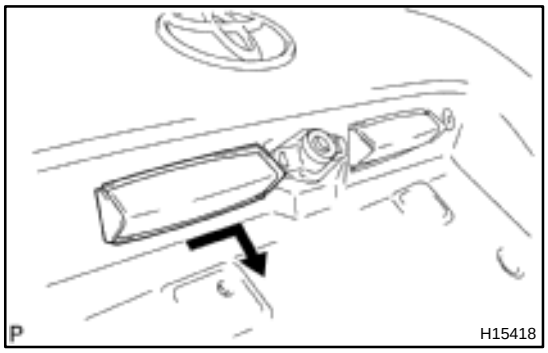

4. REMOVE LICENCE PLATE LIGHT

(a) Disconnect the connector.

(b) Remove the licence plate light as shown in the illustration.

(c) Employ the same manner described above to the other side.

(d) Using a clip remover, remove the clamps.

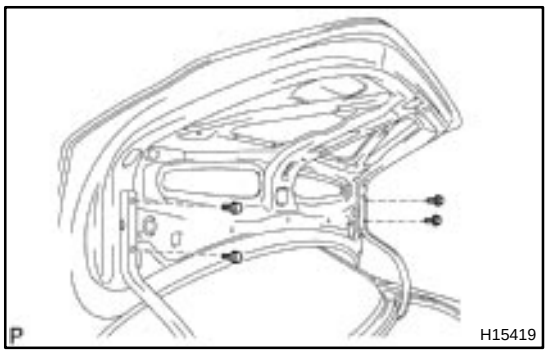

5. REMOVE LUGGAGE COMPARTMENT DOOR

Remove the 4 bolts luggage compartment door.
Torque: 8.3 N·m (85 kgf·cm, 74 in.·lbf)

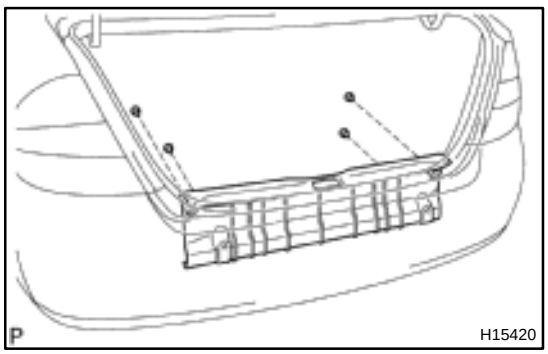

6. REMOVE LUGGAGE REAR FLOOR FINISH PLATE

(a) Using a clip remover, remove the 4 clips.

(b) Remove the rear floor finish plate.

7. REMOVE LUGGAGE COMPARTMENT DOOR WEATHERSTRIP

8. REMOVE LUGGAGE COMPARTMENT SIDE TRIM COVER LH AND RH

(a) Remove the 3 clips and lower side luggage compartment cover.
(b) Remove the clip and warning reflector holder.
(c) Remove the warning reflector box.
(d) Remove the 4 clips and luggage compartment side trim cover LH and RH.

9. REMOVE REAR SEAT CUSHION (See page BO–83)

10. REMOVE REAR SEATBACK (See page BO–83)

11. REMOVE LUGGAGE TRIM NO. 2 COVER

12. REMOVE LUGGAGE COMPARTMENT TRIM COVER

13. REMOVE UPPER PART OF REAR DOOR OPENING TRIMS

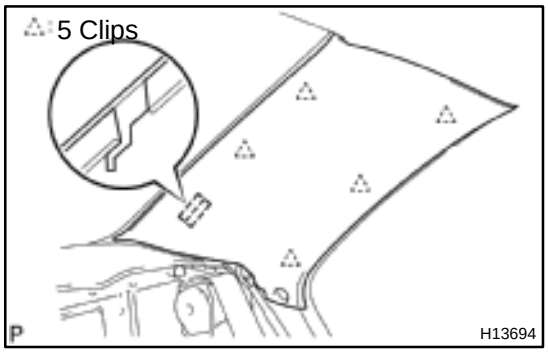

14. REMOVE ROOF SIDE INNER GARNISH

(a) Using a screwdriver, disengage the clips.

HINT:

Tape the screwdriver tip before use.

(b) Pull the garnish upward to remove it.
(c) Employ the same manner described above to the other side.

15. REMOVE CRS TETHER ANCHOR

Remove the 3 CRS tether anchor covers and 3 CRS tether anchor brackets.

Torque: 20 N·m (200 kgf·cm, 14 ft·lbf)

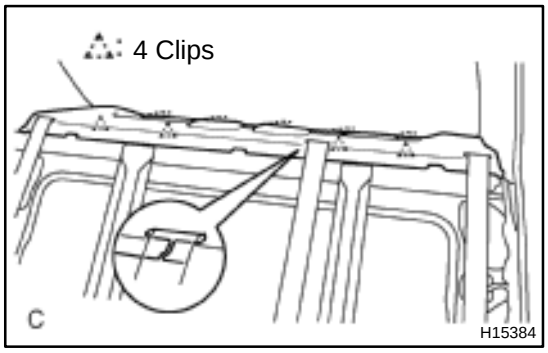

16. REMOVE PACKAGE TRAY TRIM PANEL

(a) Pull the package tray trim panel upward to disengage the clips.
(b) Remove the rear seat outer belts through the cut out on the package tray trim.
(c) Pull the package tray trim panel forward to remove it.

17. REMOVE SILENCER PAD

18. REMOVE ROOM PARTITION PANEL

19. REMOVE TORSION BAR

(a) Remove the torsion bars from center bracket.

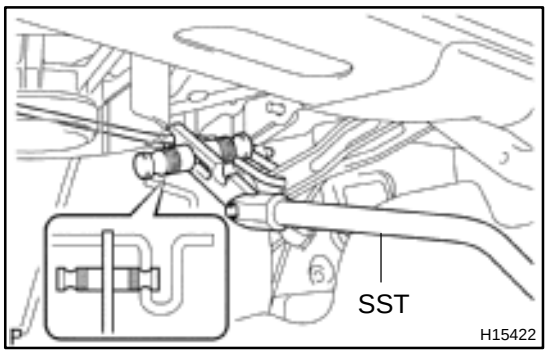

(b) Install SST to the torsion bar on the hinge side.
SST 09804–24010

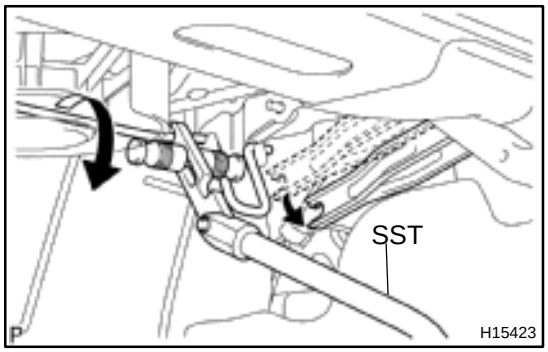

(c) Push down on SST, and pull the luggage compartment door hinge from the torsion bar.
(d) Slowly lift SST, and remove the torsion bar from the torsion bar bracket with SST.

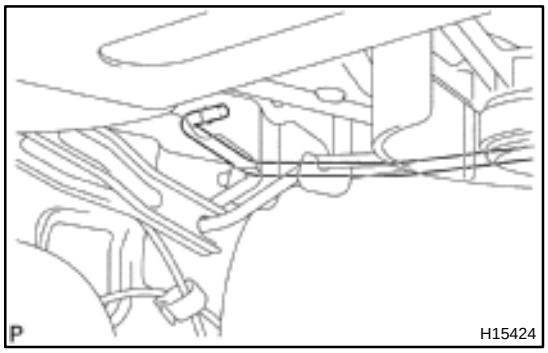

(e) Disconnect the torsion bar from the bracket.
(f) Employ the same manner described above to the other side.

20. REMOVE LUGGAGE COMPARTMENT DOOR HINGE

Remove the pin and luggage compartment door hinge.

INSTALLATION

1. INSTALL WASHER NOZZLES

(a) Install the washer nozzles to the hood.

(b) Connect the washer hoses.

2. INSTALL OUTER FRONT COWL TOP PANEL

(a) Install the outer front cowl top panel with 6 bolts.
Torque: 5.4 N·m (55 kgf·cm, 48 in.·lbf)

(b) Push in the wiper motor wire harness with the grommet.

3. INSTALL ABS RELAY BLOCK

Install the ABS relay block with the 2 bolts.

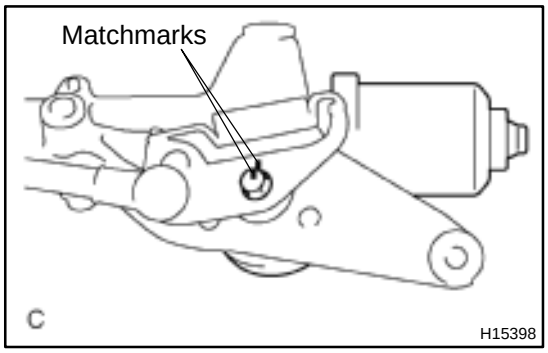

4. INSTALL WIPER MOTOR

(a) Install the wiper motor with the 3 bolts to the wiper link.
Torque: 5.4 N·m (55 kgf·cm, 48 in.·lbf)

(b) Align the matchmarks on the wiper link and wiper motor, then install the washer and nut.
Torque: 17 N·m (175 kgf·cm, 13 ft·lbf)

(c) Install the wiper motor cover.

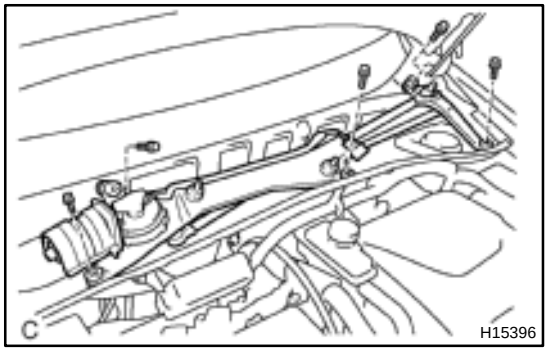

5. INSTALL WIPER LINK ASSEMBLY

(a) Install the wiper link assembly with 5 bolts.
Torque: 7.4 N·m (75 kgf·cm, 65 in.·lbf)

(b) Connect the connecter.

6. INSTALL COWL TOP VENTILATOR LOUVERS

Install the cowl top ventilator louver LH and RH, then install the 2 screws.

7. INSTALL HOOD TO COWL TOP SEAL

8. INSTALL WIPER ARMS

(a) Operate the wiper motor once and turn the wiper switch OFF.

(b) Install the wiper arms and tighten nuts by hand.

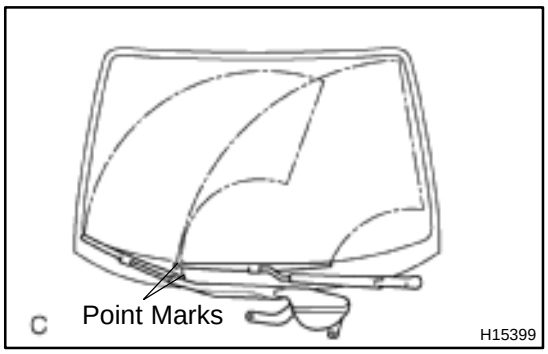

(c) Adjust the installation position of the arms to the positions as shown in the illustration.

(d) Torque the 3 nuts.
Torque: 26 N·m (270 kgf·cm, 20 ft·lbf)

(e) Install the wiper arm head cap.

BO3PW–01

INSTALLATION

1. CLEAN CONTRACT SURFACE OF BODY

(a) Using a heat light, heat the moulding surface to 40 – 60 ˚C (104 – 140 ˚F).

NOTICE:

Do not heat the body excessively.

(b) Using a knife, cut away any rough areas on the body.

NOTICE:

Be careful not to damage the body.

(c) Wipe off stains with cleaner.

2. CLEAN MOULDING

If reusing the moulding.

(a) Using a heat light, heat the moulding surface to 20 – 30 ˚C (68 – 86 ˚F).

NOTICE:

Do not heat the moulding excessively.

(b) Using a knife, cut the remaining adhesive from the moulding.

NOTICE:

Be careful not to damage the moulding.

(c) Wipe off stains with cleaner.

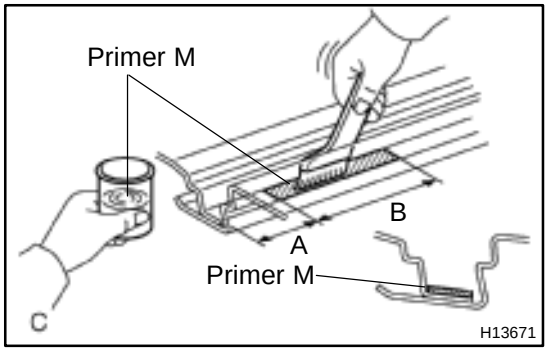

3. COAT CONTACT SURFACE OF BODY WITH PRIMER "M"

Using a brush, coat the contact surface on the body with Primer M as shown in the illustration.

Front end:

A: 24.9 mm (0.980 in.)

B: 47.5 mm (1.870 in.)

Rear end:

A: 23.2 mm (0.913 in.)

B: 57.5 mm (2.264 in.)

NOTICE:

- **Let the primer coating dry for 3 minutes or more.**
- **Do not coat the adhesive.**
- **Do not keep any of the opened Primer M for later use.**

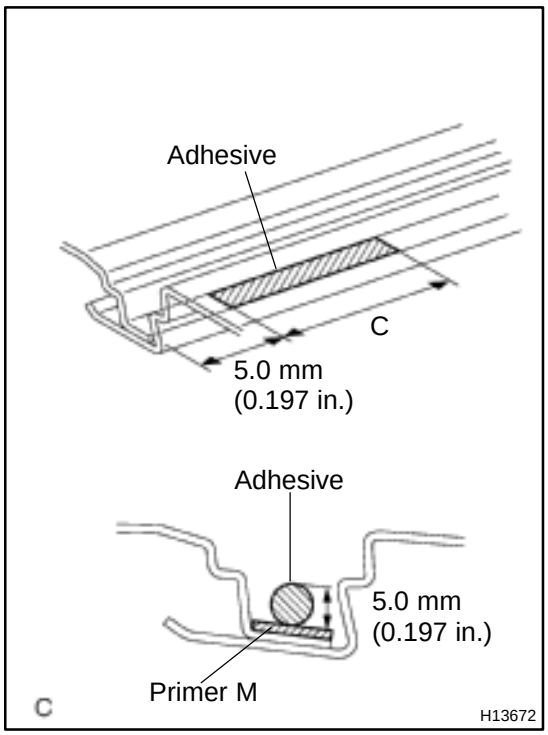

4. APPLY ADHESIVE

(a) Cut off the tip of the cartridge nozzle.

Part No. 08850–00801 or equivalent

HINT:

After cutting off the tip, use all adhesive within the time described in the chart below.

Temperature	Tackfree time
35 ˚C (95 ˚F)	15 minutes
20 ˚C (68 ˚F)	100 minutes
5 ˚C (41 ˚F)	8 hours

(b) Load the cartridge into the sealer gun.

(c) Apply adhesive to the hatched area in the illustration for both front and rear of the vehicle.

C: 20 mm (0.79 in.)

HINT:

When removing the moulding, apply adhesive well to the part where the body sealer is removed.

5. INSTALL MOULDING

Push the moulding to the body.

NOTICE:

- **Make sure that the body and moulding are heated to the proper temperature.**
- **Do not depress the adhesive coated parts excessively but just hold them down with your thumb.**
- **Scrape off any overflowing adhesive with a plastic spatula and clean the surface with a dry rag.**
- **Take care not to drive the vehicle during the time described in the chart below.**

Temperature	Minimum time prior to driving the vehicle
35 ˚C (95 ˚F)	1.5 hours
20 ˚C (68 ˚F)	5 hours
5 ˚C (41 ˚F)	24 hours

BO3PY–01

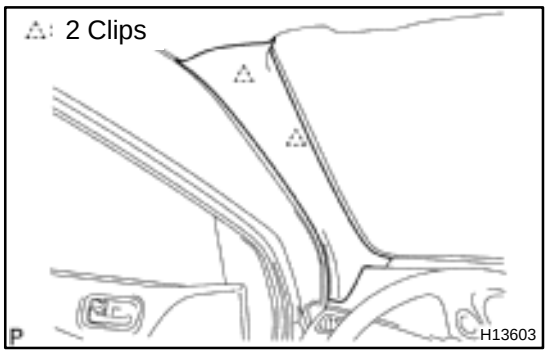

REMOVAL

1. REMOVE FRONT PILLAR GARNISH AND NO. 1 FRONT PILLAR SPACERS

(a) Using a screwdriver, remove the front pillar garnish.

HINT:

Tape the screwdriver tip before use.

(b) Remove the 4 screws and 2 No. 1 front pillar spacers.

(c) Employ the same manner described above to the other side.

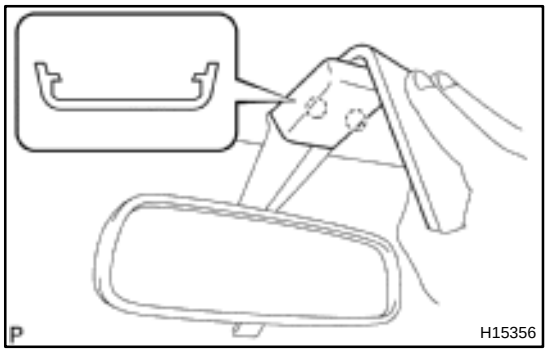

2. REMOVE INNER REAR VIEW MIRROR

(a) Using a moulding remover, remove the cover as shown in the illustration.

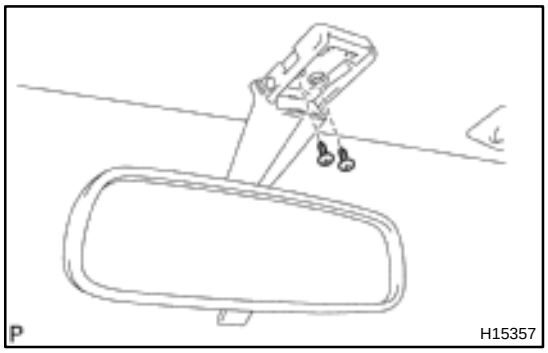

(b) Remove the 2 screws and inner rear view mirror.

3. REMOVE MAP LAMP

(a) Using a screwdriver, remove the map lamp.

(b) Disconnect the connector.

4. REMOVE SUN VISORS

Remove the 4 screws and pull the 2 sun visors downward.

5. REMOVE SUN VISOR HOLDERS

Remove the 2 screws and 2 holders.

6. REMOVE ASSIST GRIP

(a) Using a screwdriver, remove the caps.

HINT:

Tape the screwdriver tip before use.

(b) Remove the 2 screws and assist grip.

7. PULL DOWN FRONT PART OF ROOF HEADLINING

8. REMOVE WIPER ARMS

Remove the wiper arm head cap, 3 nuts and 2 wiper arms.

9. REMOVE HOOD TO COWL TOP SEAL

10. REMOVE COWL TOP VENTILATOR LOVERS

Remove the 2 screws, then pull out the cowl top ventilator louver RH and LH.

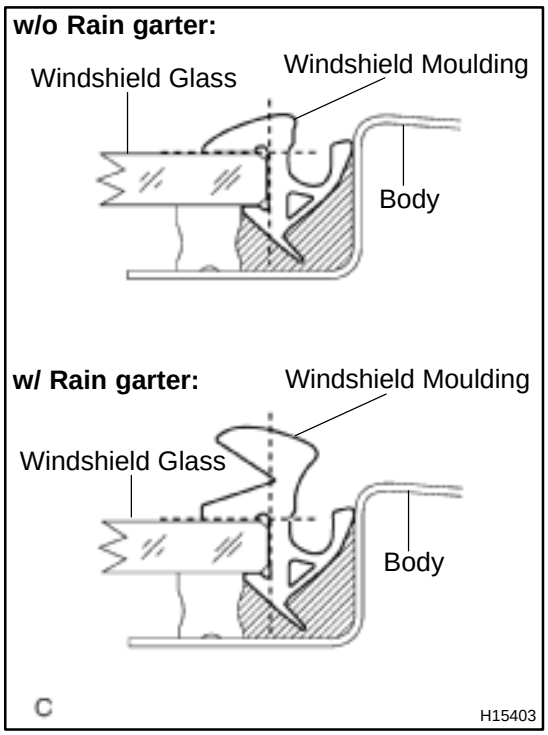

11. REMOVE WINDSHIELD MOULDING

(a) Using a knife, cut off the moulding as shown.

NOTICE:

Do not damage the body with the knife.

(b) Remove the remaining moulding.

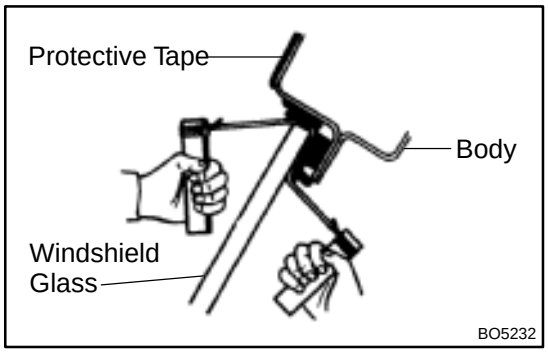

12. REMOVE WINDSHIELD GLASS

(a) Push piano wire through between the body and glass from the interior.

(b) Tie both wire ends to wooden blocks or similar object.

HINT:

Apply protective tape to the outer surface to keep the surface from being scratched.

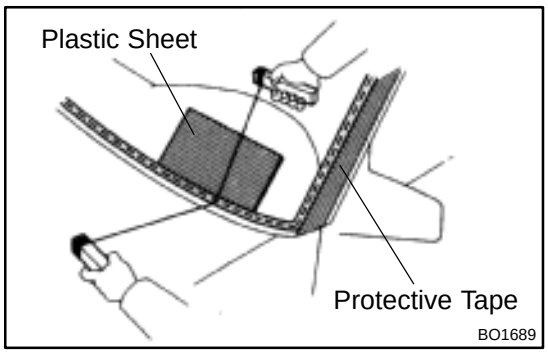

NOTICE:

When separating the glass, be careful not to damage the paint and interior and exterior ornaments. To prevent scratching the safety pad when removing the windshield, place a plastic sheet between the piano wire and safety pad.

BO3PZ–01

INSTALLATION

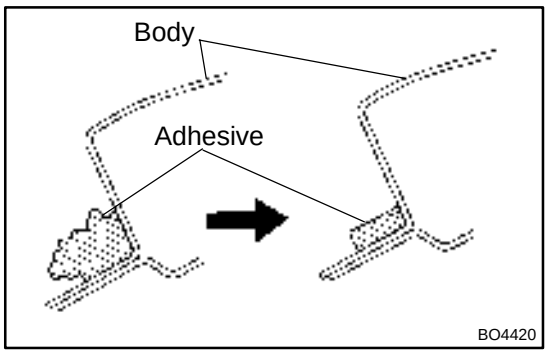

1. CLEAN AND SHAPE CONTACT SURFACE OF BODY

(a) Using a knife, cut away any rough areas on the body.

HINT:

Leave as much of the adhesive on the body as possible.

(b) Clean the cutting surface of the adhesive with a shop rag saturated in cleaner.

HINT:

Even if all the adhesive has been removed, clean the body.

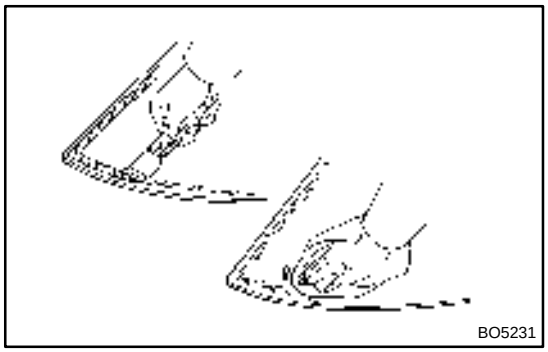

2. CLEAN REMOVED GLASS

(a) Using a scraper, remove the damaged stoppers, dam and adhesive sticking to the glass.

(b) Clean the glass with cleaner.

NOTICE:

- **Do not touch the glass face after cleaning it.**
- **Be careful not to damage the glass.**

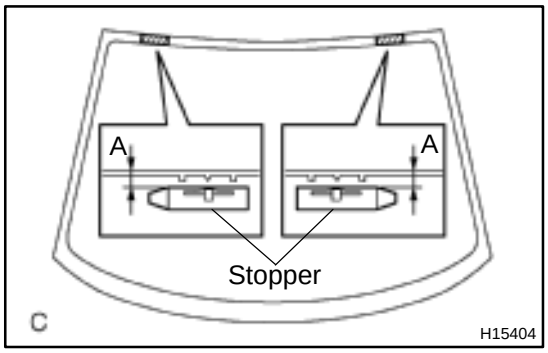

3. INSTALL NEW STOPPERS

Install new stoppers onto the glass.

A: 9.5 mm (0.374 in.)

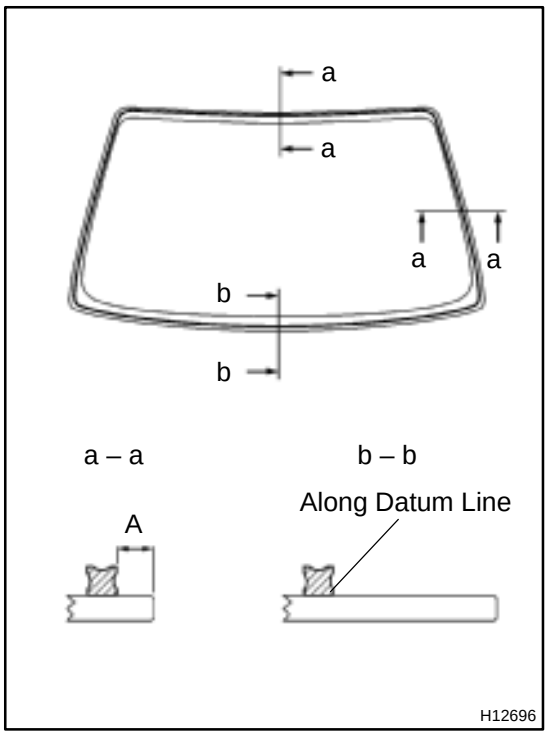

4. INSTALL NEW DAM

Install a new dam with adhesive tape as shown in the illustration.

A: 7.0 mm (0.276 in.)

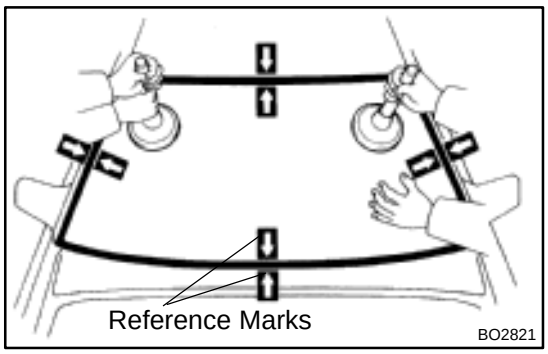

5. POSITION GLASS

(a) Using a suction rubber, place the glass in the correct position.

(b) Check that all contacting parts of the glass rim are perfectly even.

(c) Place reference marks between the glass and body.

(d) Remove the glass.

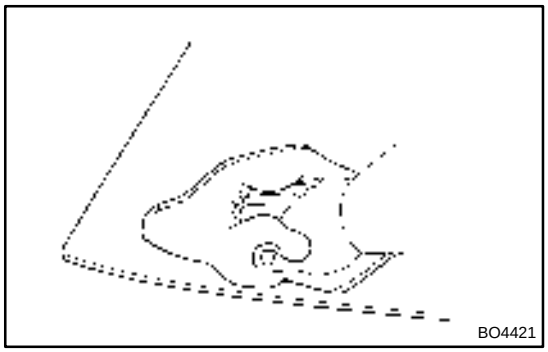

6. CLEAN CONTACT SURFACE OF GLASS

Using a cleaner, clean the contact surface which is black–colored area around the entire glass rim.

NOTICE:

Do not touch the glass face after cleaning it.

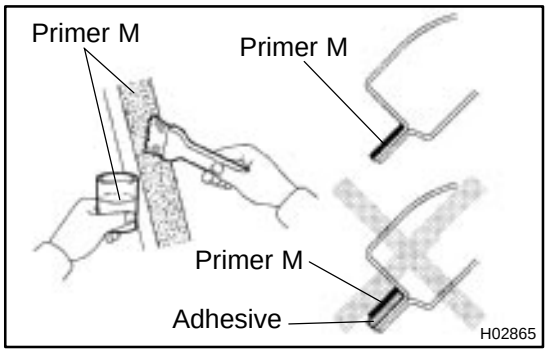

7. COAT CONTACT SURFACE OF BODY WITH PRIMER "M"

Using a brush, coat Primer M to the exposed part of body on the vehicle side.

NOTICE:

- **Let the primer coating dry for 3 minutes or more.**
- **Do not coat Primer M to the adhesive.**
- **Do not keep any of the opened Primer M for later use.**

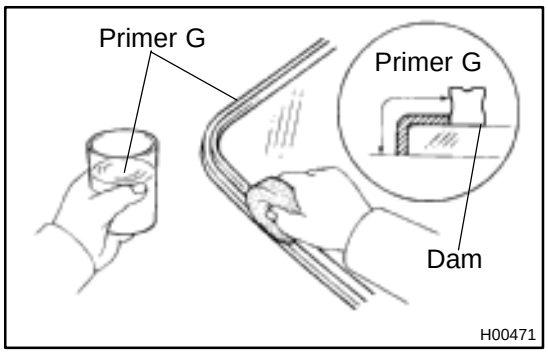

8. COAT CONTACT SURFACE OF GLASS WITH PRIMER "G"

(a) Using a brush or sponge, coat the edge of the glass and the contact surface with Primer G.

(b) When the primer is coated wrongly to the area other than the specified, wipe it off with a clean shop rag before the primer dries.

NOTICE:

- **Let the primer coating dry for 3 minutes or more.**
- **Do not keep any of the opened Primer G for later use.**

9. APPLY ADHESIVE

(a) Cut off the tip of the cartridge nozzle.
Part No. 08850–00801 or equivalent

HINT:
After cutting off the tip, use all adhesive within the time described in the table below.

Temperature	Tackfree time
35 ˚C (95 ˚F)	15 minutes
20 ˚C (68 ˚F)	100 minutes
5 ˚C (41 ˚F)	8 hours

(b) Load the cartridge into the sealer gun.

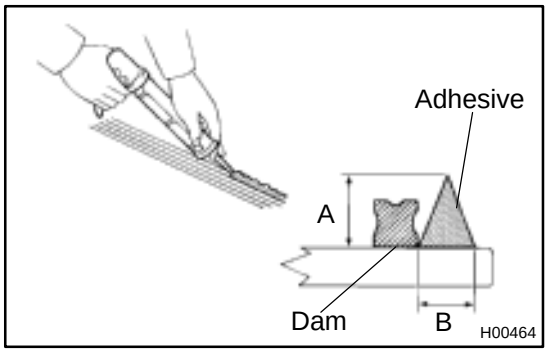

(c) Coat the glass with adhesive as shown.
A: 12 mm (0.47 in.)
B: 8 mm (0.31 in.)

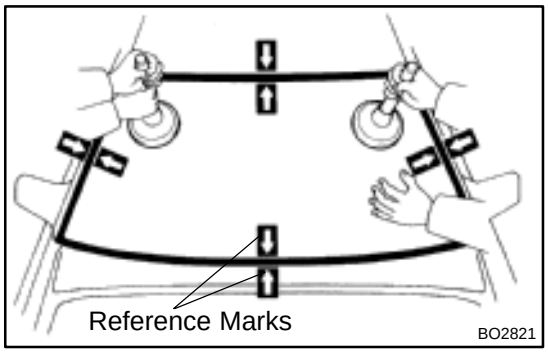

10. INSTALL WINDSHIELD GLASS AND MOULDING

(a) Install the glass, aligning the reference marks using a suction rubber.

HINT:
Check to see that the stoppers are attached to the body correctly.

(b) Lightly press the glass front surface for close contact.

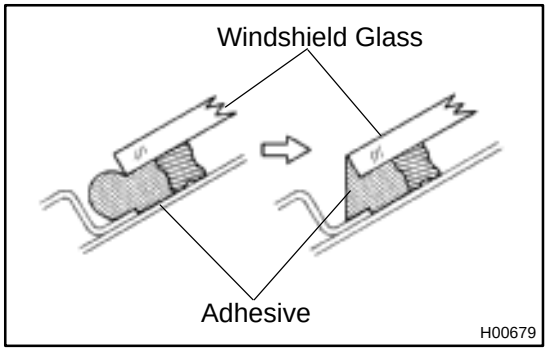

(c) Correct insufficient or protruded adhesive agent using a spatula.

HINT:
Apply the adhesive agent up to the windshield glass edge.

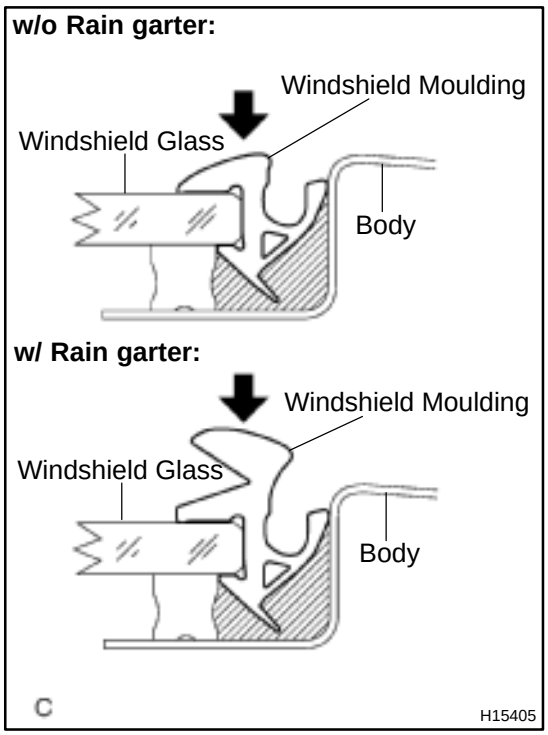

(d) Install a new windshield moulding to the windshield glass before the adhesive agent hardens.

HINT:

Install the moulding, aligning the center of moulding with the center of body.

(e) Remove any excessive adhesive agent before it hardens.

(f) Hold the glass and moulding in place securely with a protective tape or equivalent until the adhesive hardenes.

NOTICE:

Take care not to drive the vehicle during the time described in the table below.

Temperature	Minimum time prior to driving the vehicle
35 ˚C (95 ˚F)	1.5 hours
20 ˚C (68 ˚F)	5 hours
5 ˚C (41 ˚F)	24 hours

11. INSPECT FOR LEAK AND REPAIR

NOTICE:

Conduct a leak test after the hardening time has elapsed.

12. INSTALL COWL TOP VENTILATOR LOUVERS

Install the cowl top ventilator louver LH and RH, then install the 2 screws.

13. INSTALL HOOD TO COWL TOP SEAL

14. INSTALL WIPER ARMS

(a) Operate the wiper motor once and turn the wiper switch OFF.

(b) Install the wiper arms and tighten nuts by hand.

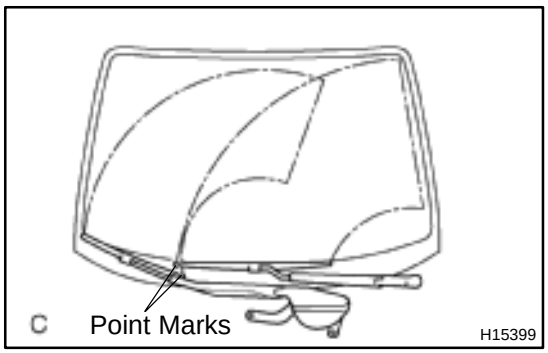

(c) Adjust the installation positions of the wiper arms to the positions as shown in the illustration.

(d) Torque the 3 nuts.

Torque: 26 N·m (270 kgf·cm, 20 ft·lbf)

(e) Install the wiper arm head cap.

15. INSTALL FRONT SIDE OF ROOF HEADLINING

16. INSTALL ASSIST GRIP

(a) Install the assist grip with the 2 screws.

(b) Install the caps.

17. INSTALL SUN VISOR HOLDERS

Install the 2 sun visor holders with the 2 screws.

18. INSTALL SUN VISORS

Install the 2 sun visors with the 4 screws.

19. INSTALL MAP LAMP

(a) Connect the connector.

(b) Install the map lamp.

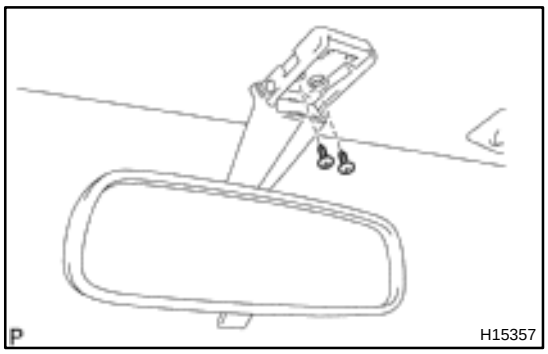

20. INSTALL INNER REAR VIEW MIRROR

(a) Install the inner rear view mirror with the 2 screws.
Torque: 2.9 N·m (30 kgf·cm, 26 in.·lbf)

(b) Install the cover.

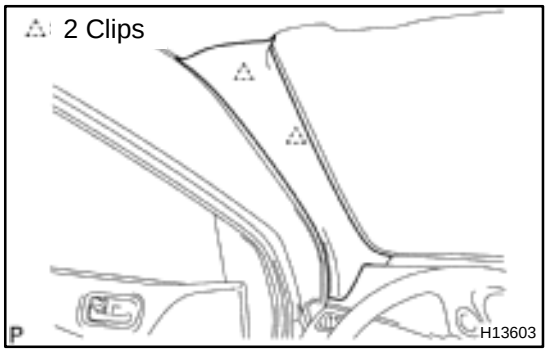

21. INSTALL FRONT PILLAR GARNISH AND NO. 1 FRONT PILLAR SPACERS

(a) Install the 2 No. 1 front pillar spacers and 4 screws.

(b) Install the front pillar garnish to the body.

(c) Employ the same manner described above to the other side.

BO3Q1–01

REMOVAL

1. **REMOVE REAR SEAT CUSHION (See page BO–83)**
2. **REMOVE REAR SEATBACK (See page BO–83)**
3. **REMOVE UPPER PART OF REAR DOOR OPENING TRIMS**

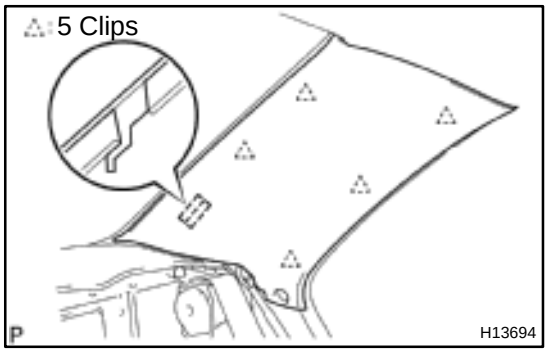

4. **REMOVE ROOF SIDE INNER GARNISH**

(a) Using a screwdriver, disengage the clips.

HINT:

Tape the screwdriver tip before use.

(b) Pull the garnish upward to remove it.

(c) Employ the same manner described above to the other side.

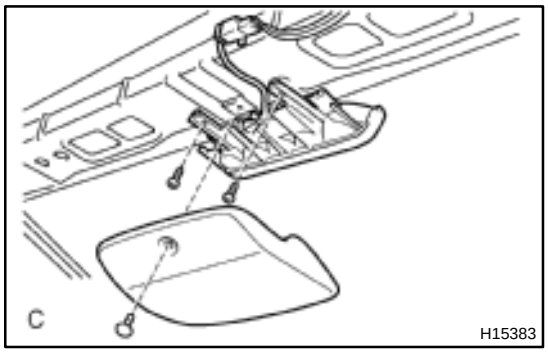

5. **REMOVE HIGH–MOUNTED STOP LIGHT**

(a) Remove the clip, then pull the high–mounted stop light cover.

(b) Disconnect the connector.

(c) Remove the 2 screws and high–mounted stop light.

6. **REMOVE CRS TETHER ANCHORS**

Remove the 3 CRS tether anchor covers and 3 CRS tether anchor brackets.

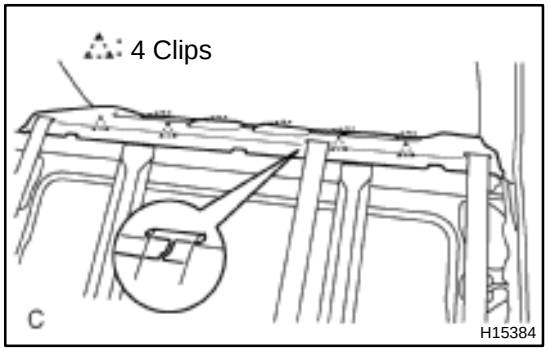

7. **REMOVE PACKAGE TRAY TRIM PANEL**

(a) Pull the package tray trim panel upward to disengage the clips.

(b) Remove the rear seat outer belts through the cutout on the package tray trim.

(c) Pull the package tray trim panel forward to remove it.

8. **REMOVE SILENCER PAD**
9. **REMOVE REAR ASSIST GRIPS**

(a) Using a screwdriver, remove the caps.

HINT:

Tape the screwdriver tip before use.

(b) Remove the 4 screws and 2 rear assist grips.

10. **PULL DOWN REAR PART OF ROOF HEADLINING**

Remove the 2 clips.

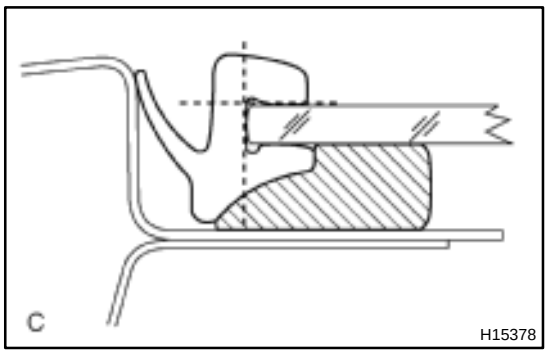

11. REMOVE BACK WINDOW OUTSIDE MOULDING

(a) Using a knife, cut off the moulding as shown in the illustration.

NOTICE:

Do not damage the body with the knife.

(b) Remove the remaining moulding.

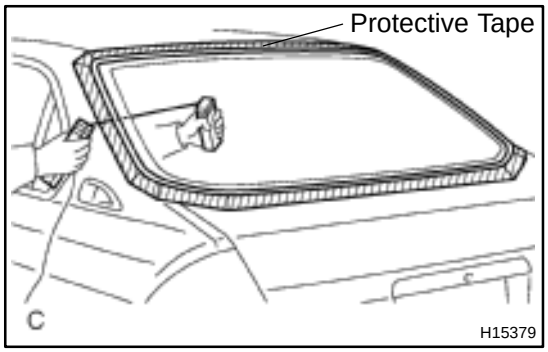

12. REMOVE BACK WINDOW GLASS

(a) Disconnect the connector.

(b) Push piano wire through from the interior.

(c) Tie both wire ends to wooden blocks or similar objects

HINT:

Apply protective tape to the outer surface to keep the surface from being scratched.

NOTICE:

When separating the glass, take care not to damage the paint and exterior.

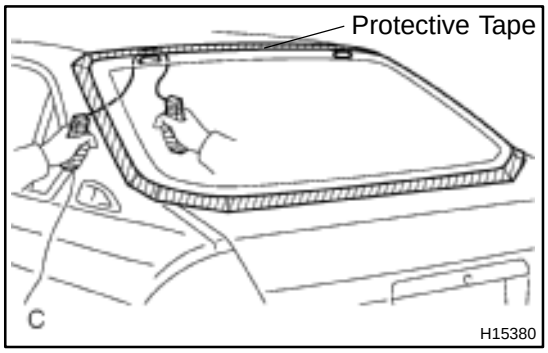

(d) Cut the adhesive by pulling the piano wire around it.

HINT:

Cut the adhesive areas as shown in the illustration, leaving the adhesive where the stoppers are.

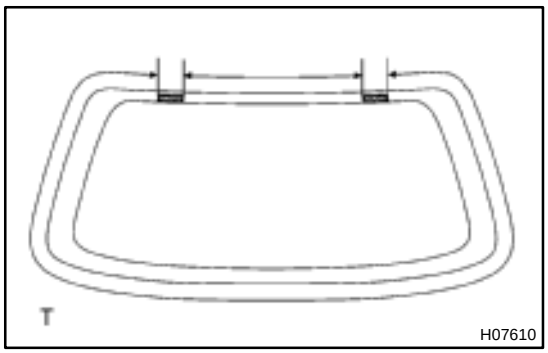

(e) Let the piano wire pass as shown in the illustration, cut off the adhesive sticking to the stoppers.

NOTICE:

- **Do not damage the glass stoppers.**
- **Leave as much of the adhesive on the body as possible when cutting off the glass.**

BO3Q2–01

INSTALLATION

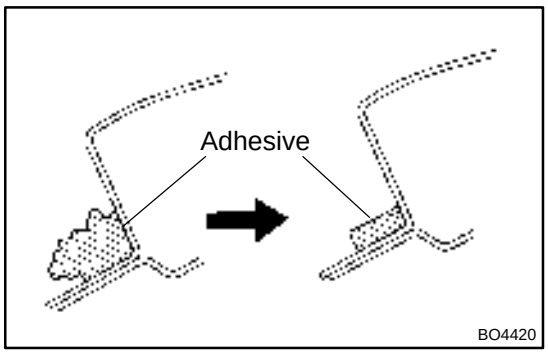

1. CLEAN AND SHAPE CONTACT SURFACE OF BODY

(a) Using a knife, cut away any rough areas on the body.

HINT:

Leave as much of the adhesive on the body as possible.

(b) Clean the cutting surface of the adhesive with a piece of shop rag saturated in cleaner.

HINT:

Even if all the adhesive has been removed, clean the body.

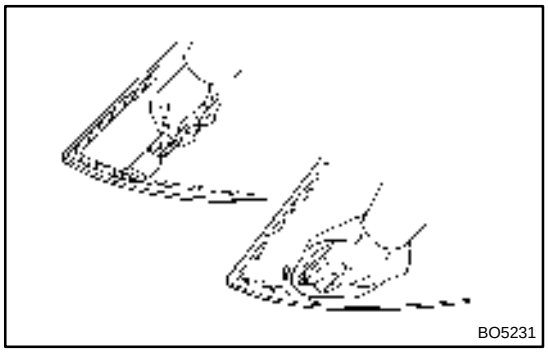

2. CLEAN REMOVED GLASS

(a) Using a scraper, remove the adhesive sticking to the glass.

(b) Clean the glass with cleaner.

NOTICE:

- **Be careful not to damage the glass.**
- **Do not touch the glass face after cleaning it.**

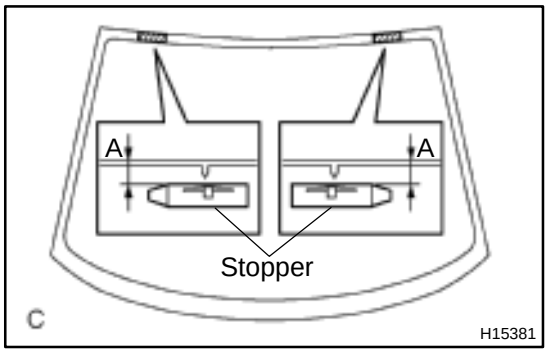

3. INSTALL NEW STOPPERS

Install new stoppers onto the glass.

A: 7.0 mm (0.276 in.)

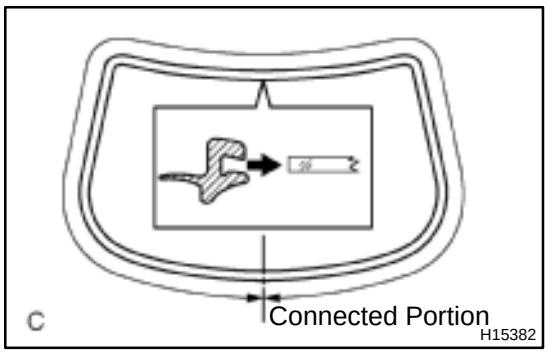

4. INSTALL NEW BACK WINDOW OUTSIDE MOULDING

Install new back window outside moulding to the back window glass as shown in the illustration.

HINT:

- Install the back window outside moulding from the center of the glass at the lower side of the vehicle.
- When installing the back window outside moulding, do not stretch it.

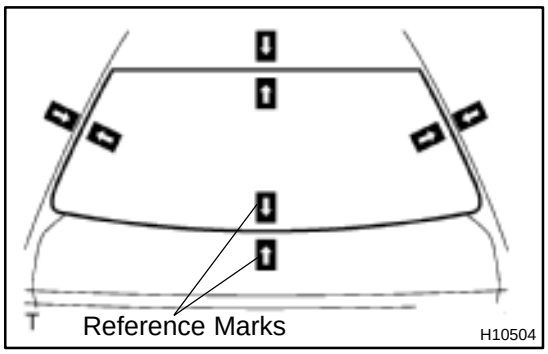

5. POSITION GLASS

(a) Place the glass in the correct position.

(b) Check that all contacting parts of the glass rim are perfectly even.

(c) Place reference marks between the glass and body.

(d) Remove the glass.

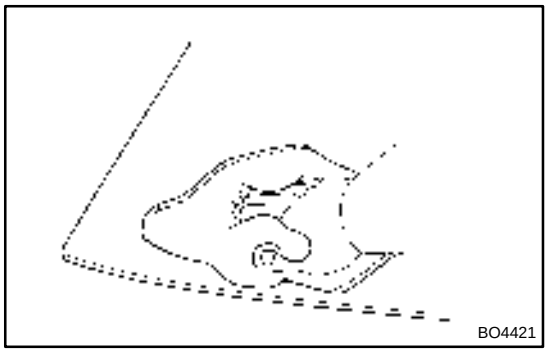

6. CLEAN CONTACT SURFACE OF GLASS

Using a cleaner, clean the contact surface which is black–colored area around the entire glass rim.

NOTICE:

Do not touch the glass face after cleaning it.

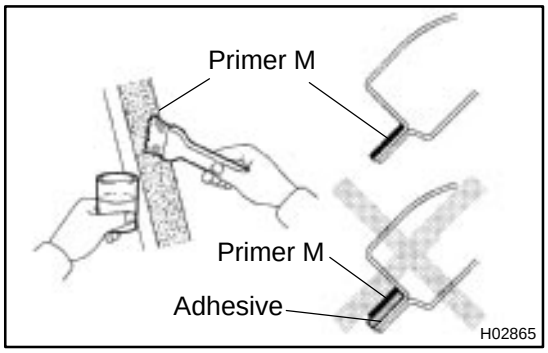

7. COAT CONTACT SURFACE OF BODY WITH PRIMER "M"

Using a brush, coat Primer M to the exposed part of body on the vehicle side.

NOTICE:

- **Let the primer coating dry for 3 minutes or more.**
- **Do not coat Primer M to the adhesive.**
- **Do not keep any of the opened Primer M for later use.**

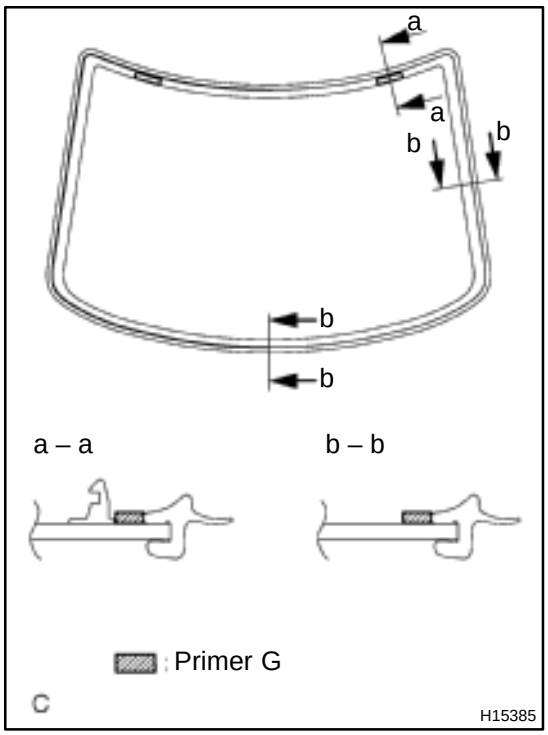

8. COAT CONTACT SURFACE OF GLASS WITH PRIMER "G"

(a) Using a brush or sponge, coat the edge of the glass and the contact surface with Primer G as shown in the illustration.

(b) When the primer is coated wrongly to the area other than the specified, wipe it off with a clean shop rag before the primer dries.

NOTICE:

- **Let the primer coating dry for 3 minutes or more.**
- **Do not keep any of the opened Primer G for later use.**

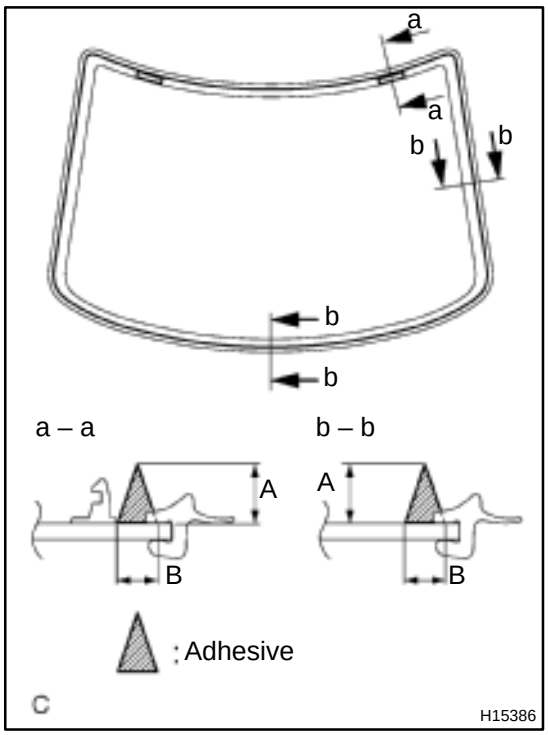

9. APPLY ADHESIVE

(a) Cut off the tip of the cartridge nozzle.
Part No. 08850–00801 or equivalent

HINT:
After cutting off the tip, use all adhesive within the time described in the table below.

Temperature	Tackfree time
35˚C (95˚F)	15 minutes
20˚C (68˚F)	100 minutes
5˚C (41˚F)	8 hours

(b) Load the cartridge into the sealer gun.
(c) Coat the glass with adhesive as shown in the illustration.
A: 12 mm (0.47 in.)
B: 8 mm (0.31 in.)

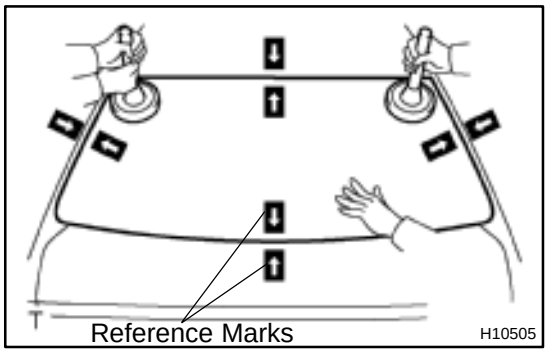

10. INSTALL GLASS

(a) Position the glass so that the reference marks are lined up, and press in gently along the rim.

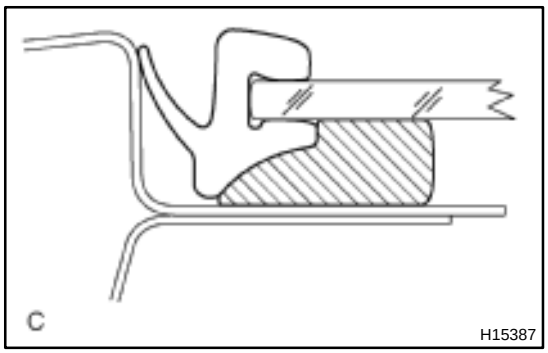

HINT:
Confirm that the moulding is attached to the body panel as shown in the illustration.

(b) Hold the back window glass in place securely with a protective tape or equivalent until the adhesive hardens.

NOTICE:
Take care not to drive the vehicle during the time described in the table below.

Temperature	Minimum time prior to driving the vehicle
35˚C (95˚F)	1.5 hours
20˚C (68˚F)	5 hours
5˚C (41˚F)	24 hours

11. INSPECT FOR LEAK AND REPAIR

(a) Conduct a leak test after the hardening time has elapsed.
(b) Seal any leak with sealant.
Part No. 08833–00030 or equivalent

12. INSTALL REAR PART OF ROOF HEADLINING

Install the 2 clips.

13. INSTALL REAR ASSIST GRIPS

(a) Install the 2 rear assist grips with the 4 screws.

(b) Install the caps.

14. INSTALL SILENCER PAD

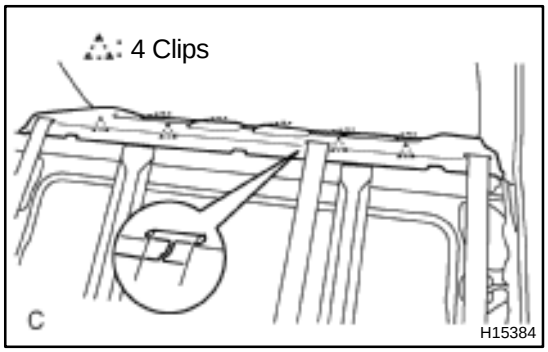

15. INSTALL PACKAGE TRAY TRIM PANEL

(a) Install the seat belt through the cutout of the package tray trim.

(b) Install the package tray trim as shown in the illustration.

16. INSTALL CRS TETHER ANCHORS

(a) Install the 3 CRS tether anchor brackets.

Torque: 20 N·m (200 kgf·cm, 14 ft·lbf)

(b) Install the CRS tether anchor covers.

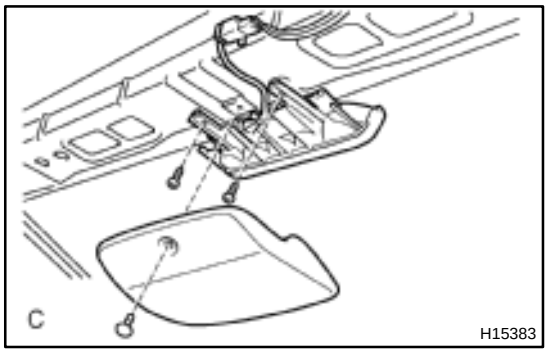

17. INSTALL HIGH–MOUNTED STOP LIGHT

(a) Install the high–mounted stop light with the 2 screws.

(b) Connect the connector.

(c) Install the high–mounted stop light cover, then install the clip.

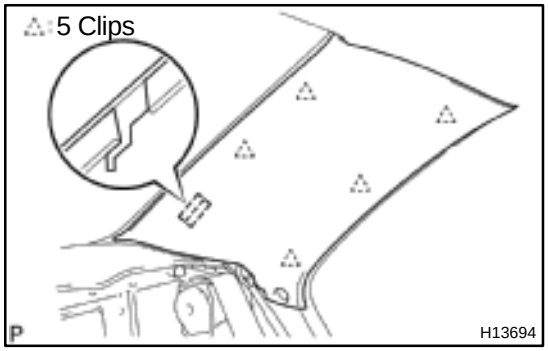

18. INSTALL ROOF SIDE INNER GARNISH

(a) Install the roof side inner garnish as shown in the illustration.

(b) Employ the same manner described above to the other side.

19. INSTALL UPPER PART OF REAR DOOR OPENING TRIMS

20. INSTALL REAR SEATBACK (See page BO–86)

21. INSTALL REAR SEAT CUSHION (See page BO–86)

INSTRUMENT PANEL

COMPONENTS

BO3TB–01

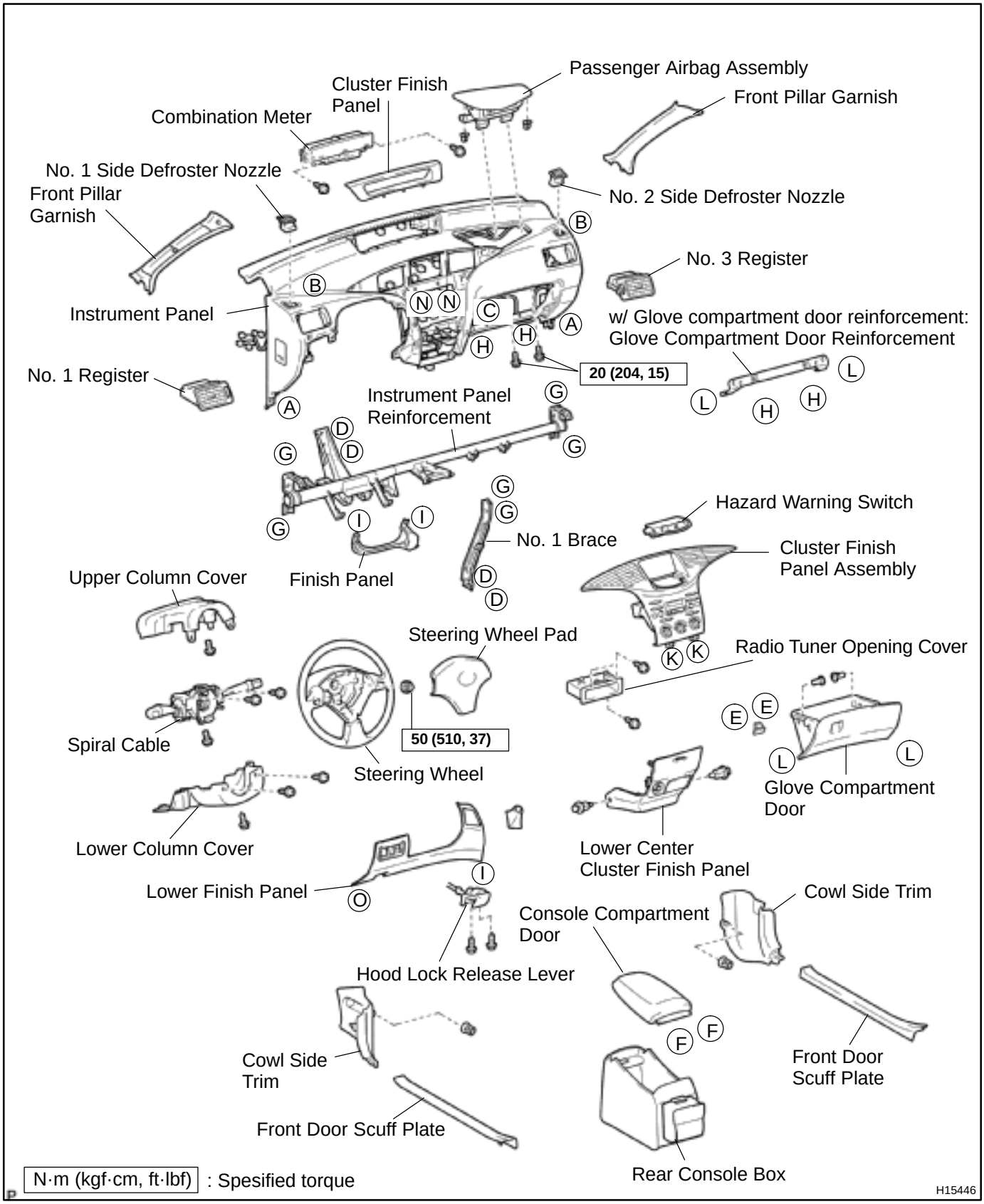

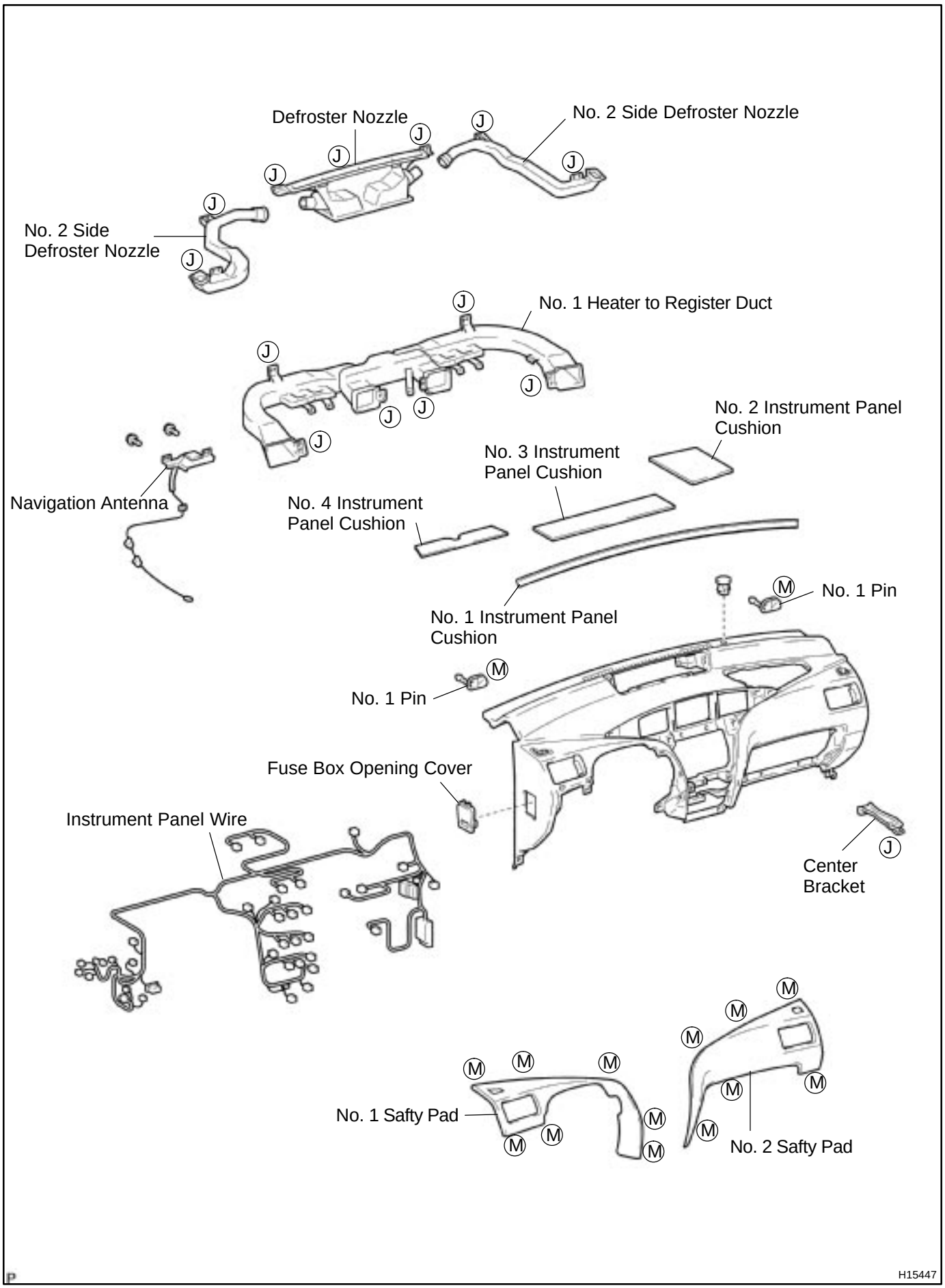
Defroster Nozzle
No. 2 Side Defroster Nozzle
No. 2 Side Defroster Nozzle
No. 1 Heater to Register Duct
No. 2 Instrument Panel Cushion
No. 3 Instrument Panel Cushion
Navigation Antenna
No. 4 Instrument Panel Cushion
No. 1 Pin
No. 1 Instrument Panel Cushion
No. 1 Pin
Fuse Box Opening Cover
Instrument Panel Wire
Center Bracket
No. 1 Safty Pad
No. 2 Safty Pad
H15447

HINT:
Screw shapes and sizes are indicated in the table below. The codes (”A” – ”O”) correspond to those indicated on the previous pages.

mm (in.)

	Shape	Size		Shape	Size		Shape	Size
Ⓐ	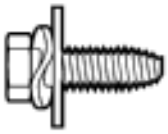	ø = 6 (0.24) L = 20 (0.79)	Ⓑ	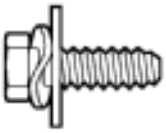	ø = 6 (0.24) L = 20 (0.79)	Ⓒ	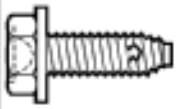	ø = 6 (0.24) L = 20 (0.79)
Ⓓ	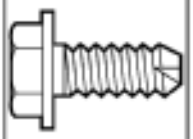	ø = 8 (0.31) L = 20 (0.79)	Ⓔ		ø = 4 (0.16) L = 13 (0.51)	Ⓕ		ø = 6 (0.24) L = 20 (0.79)
Ⓖ		ø = 8 (0.31)	Ⓗ	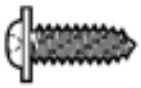	ø = 5.22 (0.2055) L = 16 (0.63)	Ⓘ	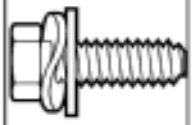	ø = 6 (0.24) L = 22 (0.87)
Ⓙ	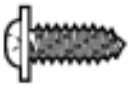	ø = 5 (0.20) L = 14 (0.55)	Ⓚ	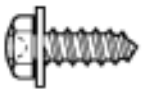	ø = 5 (0.20) L = 16 (0.63)	Ⓛ		ø = 5 (0.20) L = 18 (0.71)
Ⓜ		ø = 5 (0.20) L = 14 (0.55)	Ⓝ		ø = 6 (0.24)	Ⓞ		ø = 5 (0.20) L = 14 (0.55)

T

H15475

BO3TC–01

REMOVAL

1. **REMOVE STEERING WHEEL PAD AND STEERING WHEEL (See page SR–4)**
2. **REMOVE FRONT DOOR SCUFF PLATES**
3. **REMOVE COWL SIDE TRIMS**
4. **REMOVE FRONT PILLAR GARNISHES**

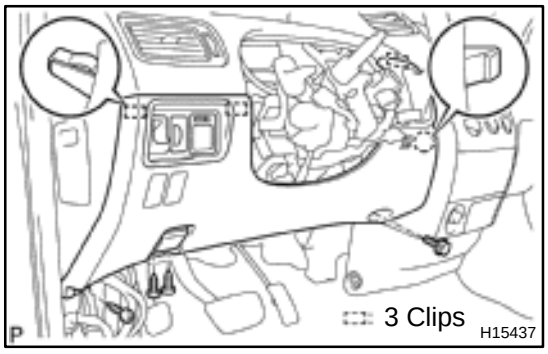

5. **REMOVE LOWER FINISH PANEL**

(a) Remove the 2 screws and hood lock release lever.
(b) Zip the shifting hole cover open.
(c) Remove the bolt and screw.
(d) Using a screwdriver, remove the lower finish panel, then disconnect the connectors and DLC3.
(e) Remove the shifting hole cover from the lower finish panel.

6. **REMOVE FINISH PANEL**
7. **REMOVE COLUMN COVERS (See page SR–4)**
8. **REMOVE SPIRAL CABLE (See page SR–4)**
9. **REMOVE GLOVE COMPARTMENT DOOR**

(a) Rotate the stoppers of the glove compartment door to 90° and pull them out inward.
(b) Remove the 2 screws and glove compartment door.
(c) Remove the 2 screws and glove compartment door lock from the glove compartment door.

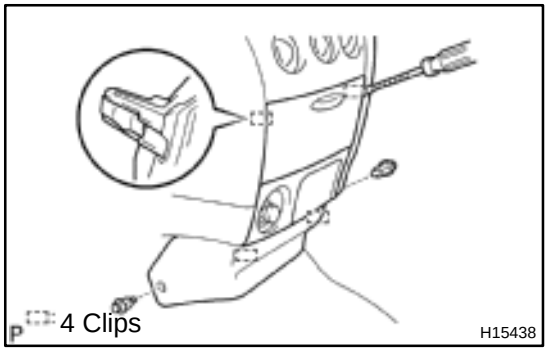

10. **REMOVE LOWER CENTER CLUSTER FINISH PANEL**

(a) Remove the 2 clips.
(b) Using a screwdriver, remove the lower center cluster finish panel.

HINT:

Tape the screwdriver tip before use.

(c) Disconnect the connector.

11. **w/ Glove compartment door reinforcement:**
REMOVE GLOVE COMPARTMENT DOOR REINFORCEMENT

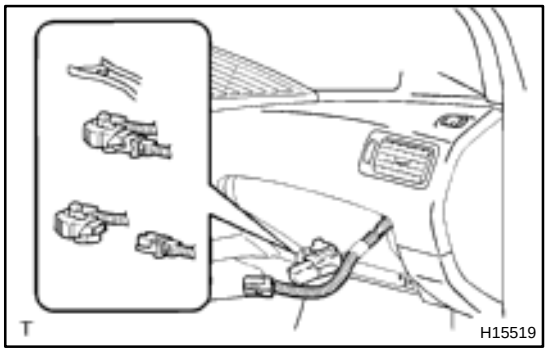

12. **DISCONNECT PASSENGER AIRBAG CONNECTOR**

(a) Disconnect the passenger airbag connector.

NOTICE:

When disconnecting the airbag connector, take care not to damage the airbag wire harness.

(b) Disengage the airbag connector clamp from the center bracket.

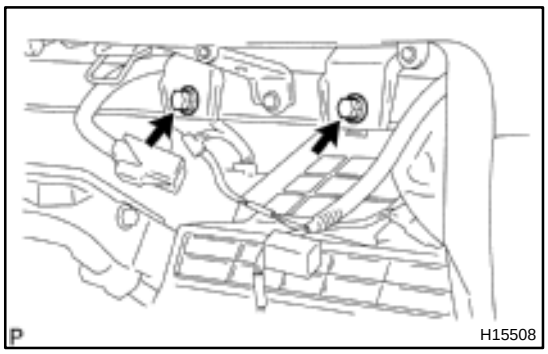

13. REMOVE PASSENGER AIRBAG ASSEMBLY

(a) Remove the 2 bolts.

Torque: 20 N·m (204 kgf·cm, 15 ft·lbf)

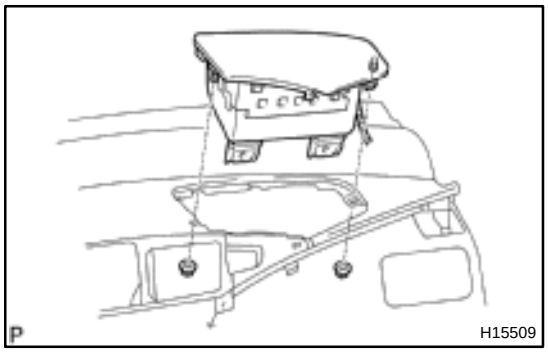

(b) Remove the 2 nuts and passenger airbag assembly.

CAUTION:

- **Do not store the passenger airbag assembly with the airbag deployment side facing down.**
- **Never disassemble the passenger airbag assembly.**

NOTICE:

When removing the passenger airbag assembly, take care not to damage the wire harness.

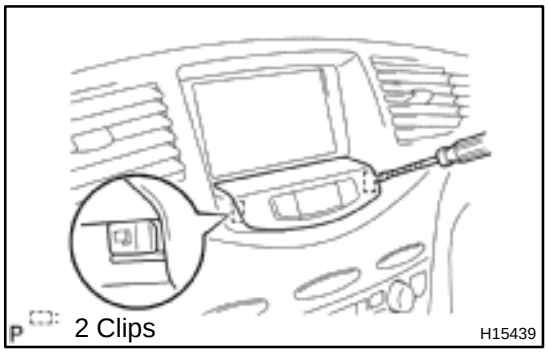

14. REMOVE HAZARD WARNING SWITCH

(a) Using a screwdriver, remove the hazard warning switch.

HINT:

Tape the screwdriver tip before use.

(b) Disconnect the connectors.

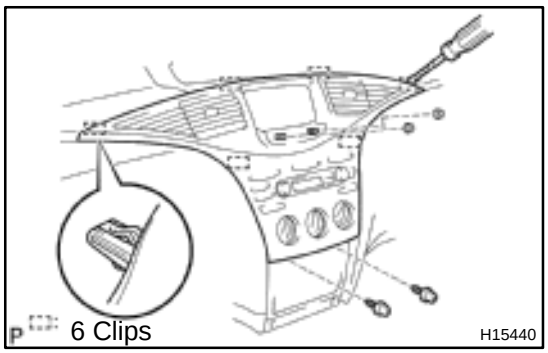

15. REMOVE CLUSTER FINISH PANEL ASSEMBLY

(a) Remove the 2 screws.

(b) Using a screwdriver, remove the cluster finish panel assembly.

(c) Disconnect the connectors.

16. REMOVE RADIO OR RADIO TUNER OPENING COVER

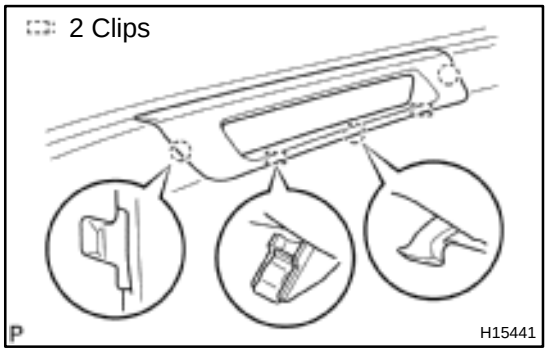

17. REMOVE COMBINATION METER

(a) Using a screwdriver, remove the cluster finish panel.

HINT:

Tape the screwdriver tip before use.

(b) Remove the 3 screws and combination meter.

(c) Disconnect the connector.

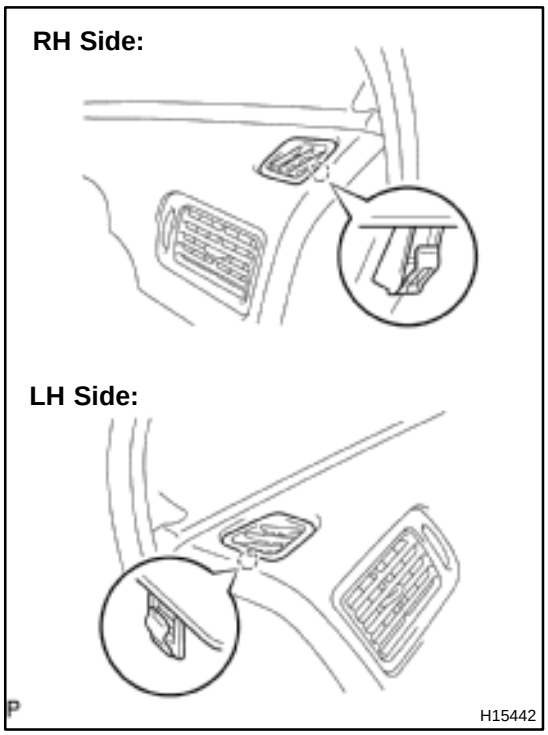

18. REMOVE NO. 1 AND NO. 2 SIDE DEFROSTER NOZZLES

Using a screwdriver, remove the No. 1 and No. 2 side defroster nozzles.

HINT:

Tape the screwdriver tip before use.

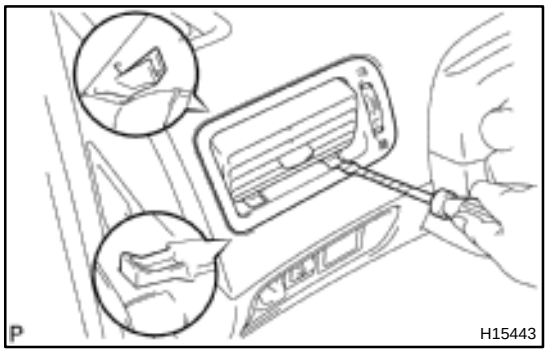

19. REMOVE NO. 1 AND NO. 3 REGISTERS

Using a screwdriver, remove the No. 1 and No. 3 registers as shown in the illustration.

HINT:

Tape the screwdriver tip before use.

20. REMOVE STEERING COLUMN (See page SR–4)

21. REMOVE INSTRUMENT PANEL

(a) Disconnect the connectors.

(b) Disengage the wire harness clamps.

(c) Remove the 4 bolts, 3 screws and instrument panel.

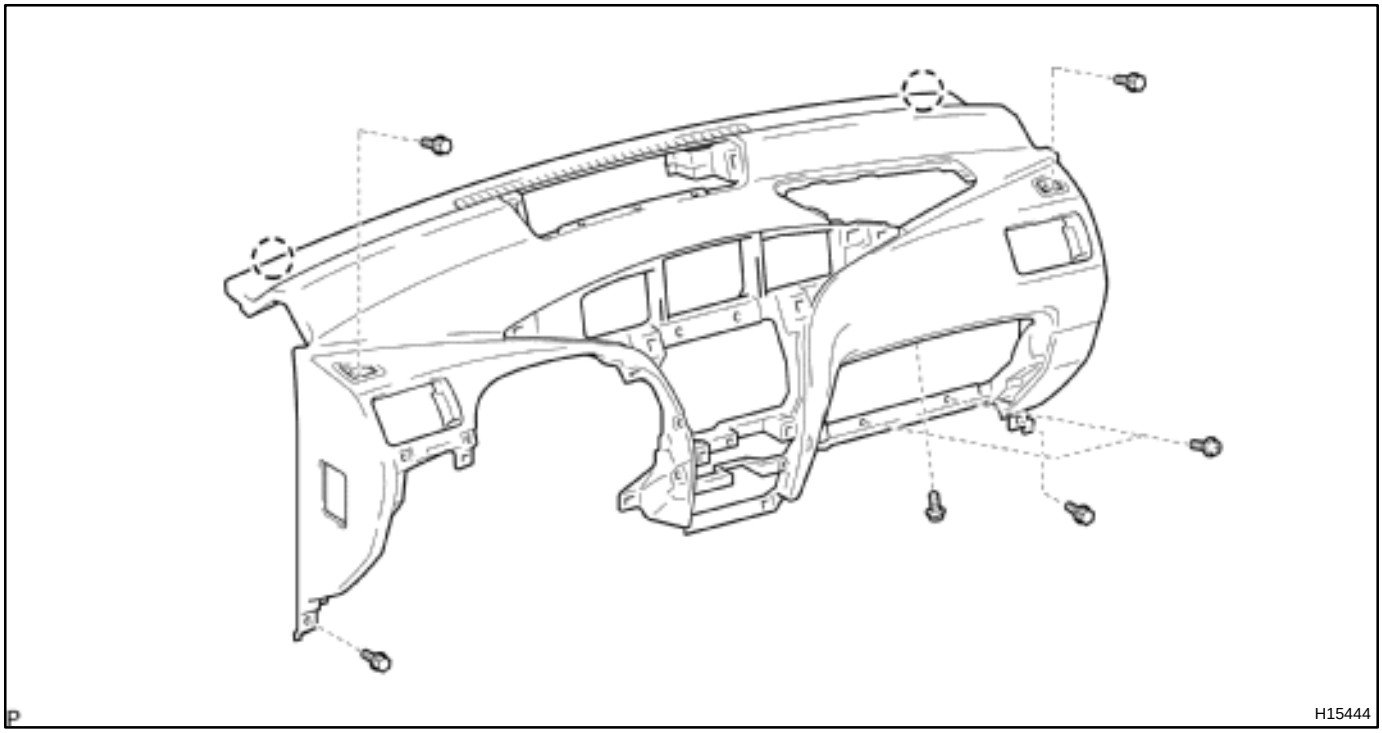

22. REMOVE NO. 1 BRACE

23. REMOVE INSTRUMENT PANEL REINFORCEMENT

Remove the 2 bolts, 4 nuts and instrument panel reinforcement.

24. REMOVE REAR CONSOLE BOX

(a) Remove the 3 bolts and rear console box.

(b) Remove the 2 screws and console compartment door from the rear console box.

BO3SR–01

REMOVAL

1. REMOVE REAR SEAT CUSHION (See page BO–83)

2. REMOVE REAR SEATBACK (See page BO–83)

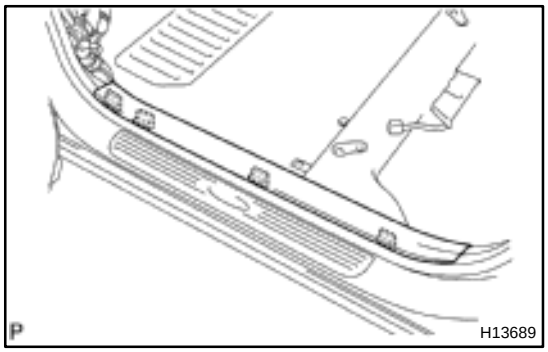

3. REMOVE FRONT DOOR INSIDE SCUFF PLATE

(a) Using a screwdriver, remove the front door inside scuff plate.

HINT:

Tape the screwdriver tip before use.

(b) Employ the same manner described above to the other side.

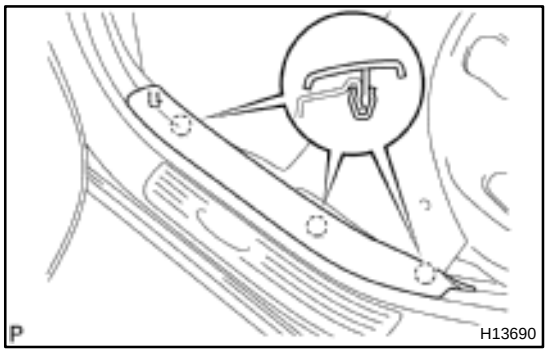

4. REMOVE REAR DOOR INSIDE SCUFF PLATE

(a) Using a screwdriver, remove the rear door inside scuff plate.

HINT:

Tape the screwdriver tip before use.

(b) Employ the same manner described above to the other side.

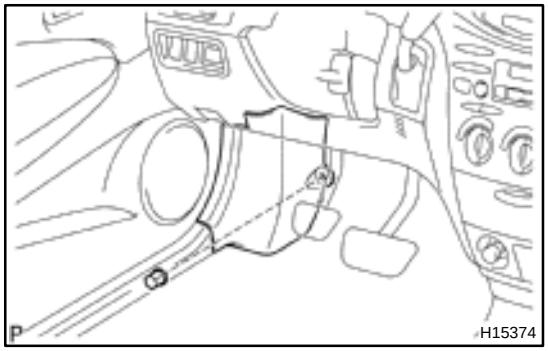

5. REMOVE COWL SIDE TRIM

(a) Remove the clip and cowl side trim.

(b) Employ the same manner described above to the other side.

6. REMOVE FRONT DOOR OPENING TRIMS

7. REMOVE REAR DOOR OPENING TRIMS

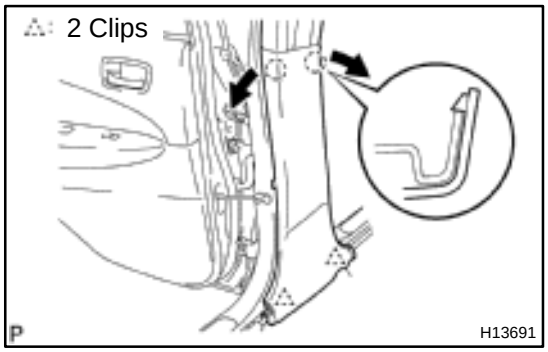

8. REMOVE CENTER PILLAR LOWER GARNISH

(a) Using a screwdriver, remove the center pillar lower garnish.

HINT:

Tape the screwdriver tip before use.

(b) Employ the same manner described above to the other side.

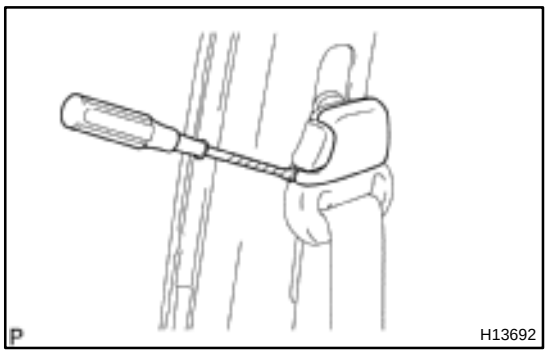

9. REMOVE FRONT SEAT OUTER BELT SHOULDER ANCHOR

(a) Using a screwdriver, remove the anchor cover cap.

HINT:

Tape the screwdriver tip before use.

(b) Remove the bolt and front seat outer belt shoulder anchor.

Torque: 42 N·m (430 kgf·cm, 31 ft·lbf)

(c) Employ the same manner described above to the other side.

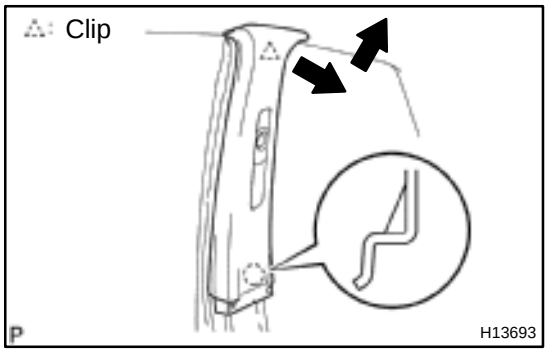

10. REMOVE CENTER PILLAR GARNISH

(a) Using a screwdriver, remove the center pillar garnish.

HINT:

Tape the screwdriver tip before use.

(b) Employ the same manner described above to the other side.

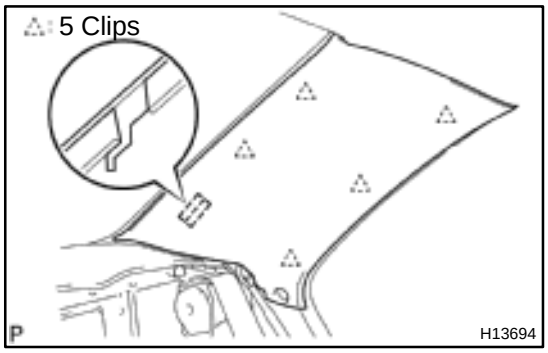

11. REMOVE ROOF SIDE INNER GARNISH

(a) Using a screwdriver, remove the roof side inner garnish.

HINT:

Tape the screwdriver tip before use.

(b) Employ the same manner described above to the other side.

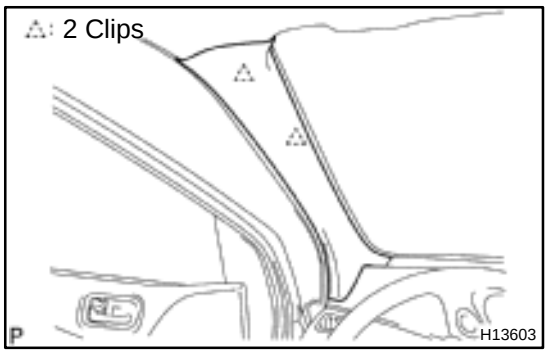

12. REMOVE FRONT PILLAR GARNISH AND NO. 1 FRONT PILLAR SPACERS

(a) Using a screwdriver, remove the front pillar garnish.

HINT:

Tape the screwdriver tip before use.

(b) Remove the 4 screws and 2 No. 1 front pillar spacers.

(c) Employ the same manner described above to the other side.

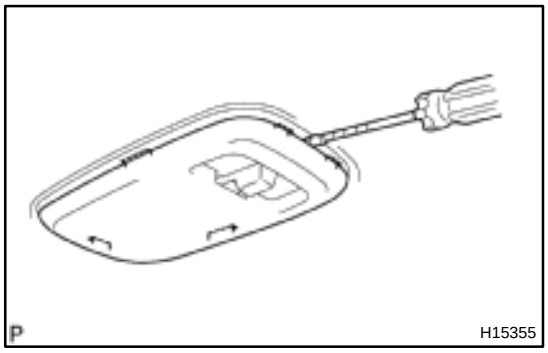

13. REMOVE ROOM LIGHT ASSEMBLY

(a) Using a screwdriver, remove the lens.

HINT:

Tape the screwdriver tip before use.

(b) Remove the 2 screws and room light assembly.

(c) Disconnect the connector.

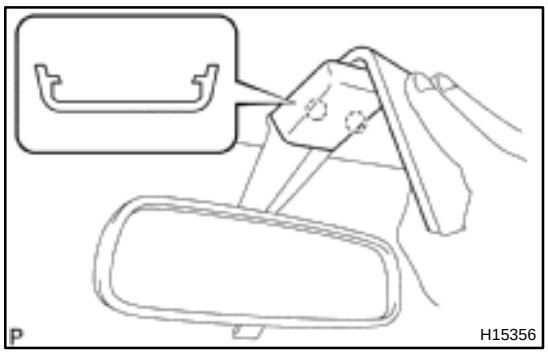

14. REMOVE INNER REAR VIEW MIRROR

(a) Using a moulding remover, remove the cover as shown in the illustration.

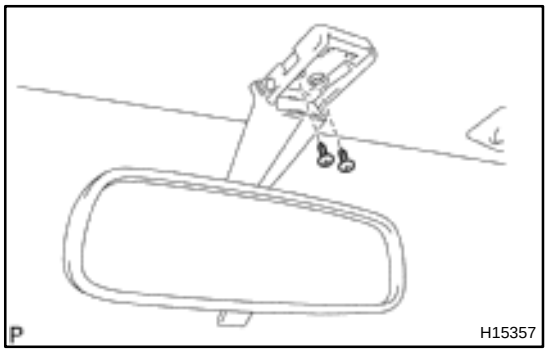

(b) Remove the 2 screws and inner rear view mirror.
Torque: 2.9 N·m (30 kgf·cm, 26 in.·lbf)

15. REMOVE MAP LAMP

(a) Using a screwdriver, remove the map lamp.
(b) Disconnect the map lamp connector.

16. REMOVE ASSIST GRIPS

(a) Using a screwdriver, remove the caps.

HINT:

Tape the screwdriver tip before use.

(b) Remove the 6 bolts and 3 assist grips.

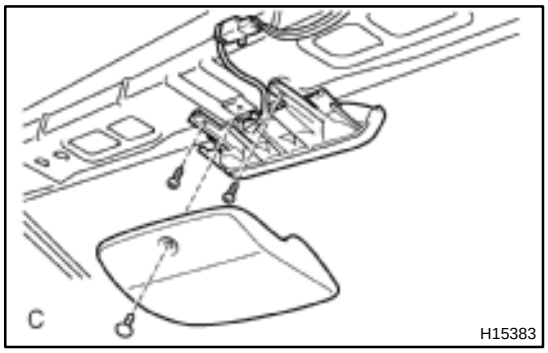

17. REMOVE HIGH–MOUNTED STOP LIGHT

(a) Remove the clip then pull the high–mounted stoplight cover.
(b) Disconnect the connector.
(c) Remove the 2 screws and high–mounted stop light.

18. REMOVE SUN VISORS

(a) Remove the 4 screws and pull the sun visors downward.
(b) Disconnect the connectors.

19. REMOVE SUN VISOR HOLDERS

Remove the 2 screws and 2 holders.

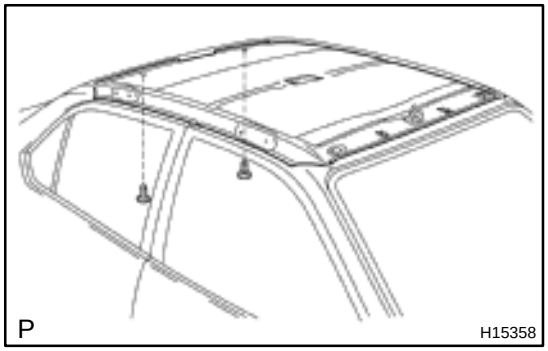

20. REMOVE ROOF HEADLINING

(a) Remove the 2 clips.
(b) Pull the roof headlining downward to remove it.

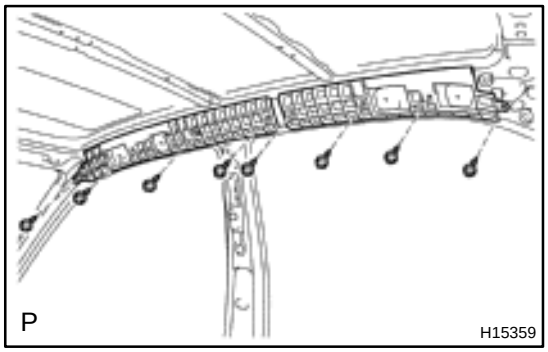

21. REMOVE FRONT AND REAR SIDE RAIL SPACER

(a) Remove the 4 screws and front side rail spacer.
(b) Remove the 4 screws and rear side rail spacer.
(c) Employ the same manner described above to the other side.

BO3SV–01

DISASSEMBLY

CAUTION:

- **When storing the seatback frame with the side airbag assembly, do not face down the airbag deployment side.**
- **Never disassemble the side airbag assembly.**

1. REMOVE HEADREST

2. REMOVE RECLINING RELEASE HANDLE

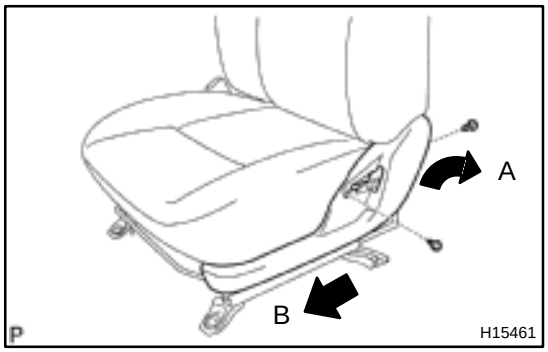

3. REMOVE SEAT CUSHION SHIELD

Remove the 2 screws and seat cushion shield as shown in the illustration.

HINT:

Remove the seat cushion shield in order A, B as shown in the illustration.

4. REMOVE FRONT SEAT INNER BELT

Remove the bolt and front seat inner belt.

5. REMOVE SEAT CUSHION INNER SHIELD

Remove the 2 screws and seat cushion inner shield.

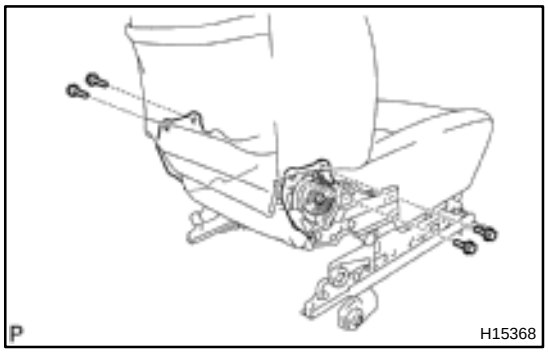

6. w/o Side airbag:
REMOVE SEATBACK ASSEMBLY

Remove the 4 bolts and seatback assembly.

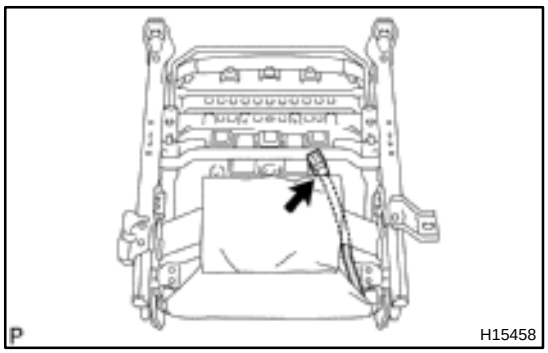

7. w/ Side airbag:
REMOVE SEATBACK ASSEMBLY

(a) Remove the clamp from wire harness of side airbag installed under the seat, then pull out the wire harness.

(b) Remove the side airbag connector from the under the seat.

(c) Remove the 4 bolts and seatback assembly.

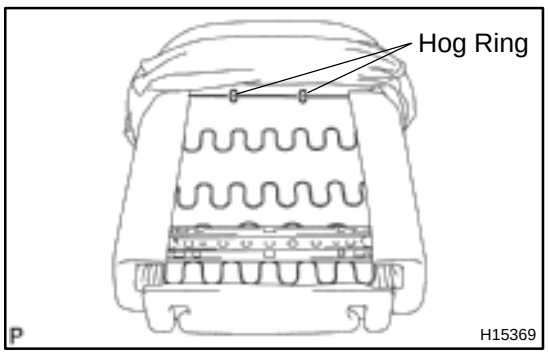

8. w/o Side airbag:
REMOVE SEATBACK COVER

(a) Remove the hog rings.

(b) Remove the headrest supports.

(c) Remove the seatback cover with pad from the seatback frame.

(d) Remove the seatback cover from the seatback pad.

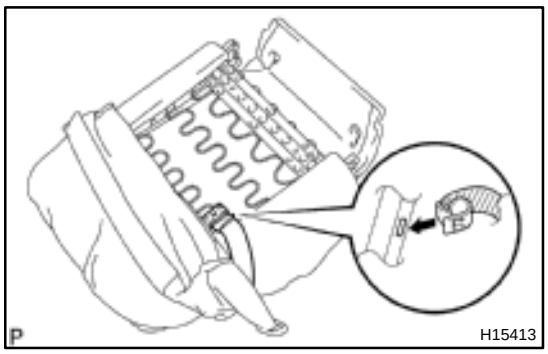

9. w/ Side airbag:
REMOVE SEATBACK COVER

(a) Remove the hog rings.
(b) Remove seatback cover hook.
(c) Remove the headrest supports.
(d) Remove the seat back cover with pad from the seatback frame.
(e) Remove the seatback cover from the seatback pad.

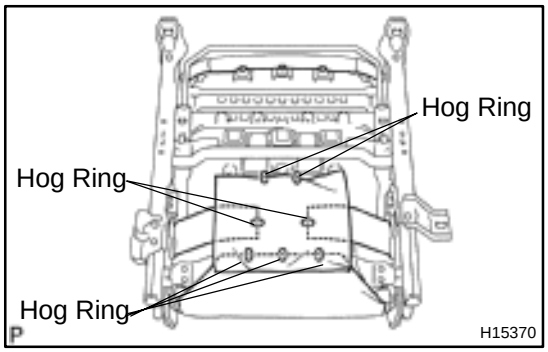

10. REMOVE SEAT CUSHION COVER WITH PAD

(a) Remove the hog rings.
(b) Disengage the seat cushion cover hooks and remove the seat cushion cover with pad from the seat cushion frame.

11. REMOVE SEAT CUSHION COVER

(a) Remove the hog rings.
(b) Remove the seat cushion cover from the seat cushion pad.

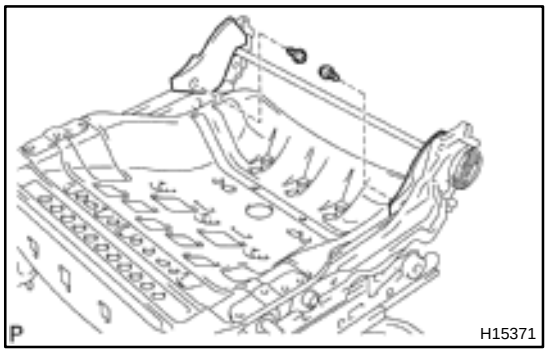

12. REMOVE RECLINING ADJUSTER INSIDE COVERS

Remove the 2 screws and 2 reclining adjuster inside covers.

13. REMOVE SEAT TRACK HANDLE

BO3SW–01

REASSEMBLY

NOTICE:

If the seatback frame with the side airbag assembly has been dropped, or there are cracks, dents or other defects in the case or connector of the side airbag assembly, replace the seatback frame with a new one.

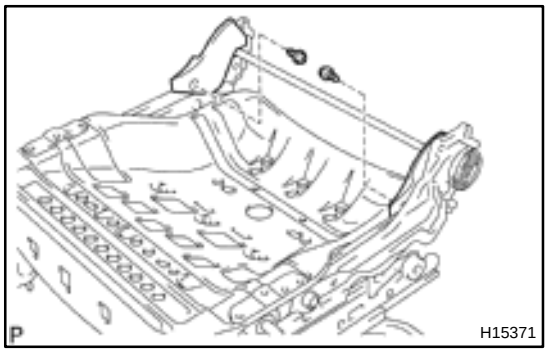

1. INSTALL SET TRACK HANDLE

2. INSTALL RECLINING ADJUSTER INSIDE COVERS

Install the 2 screws and 2 reclining adjuster inside covers.

3. INSTALL SEAT CUSHION COVER

Install the seat cushion cover with new hog rings to seat cushion pad.

HINT:

When installing hog rings, take care to prevent wrinkles as little as possible.

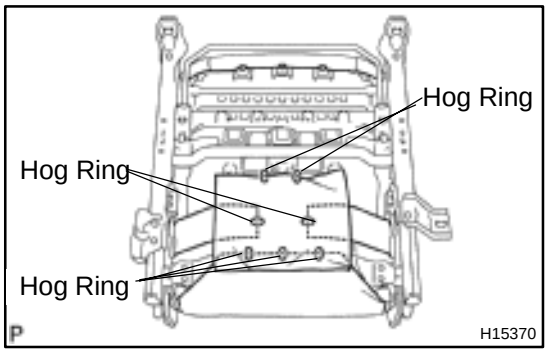

4. INSTALL SEAT CUSHION COVER WITH PAD

Install the seat cushion cover with pad to the seat cushion frame with new hog rings.

HINT:

When installing hog rings, take care to prevent wrinkles as little as possible.

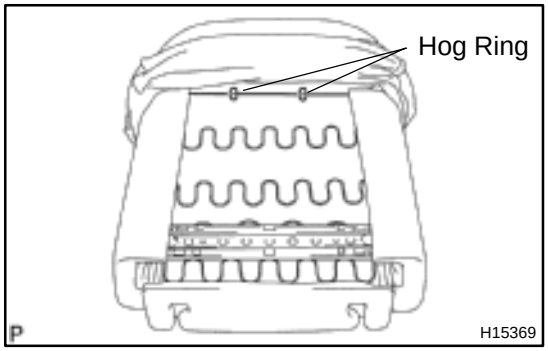

5. w/o Side airbag:
INSTALL SEATBACK COVER

(a) Install the seatback cover with new hog rengs to the seatback pad.

(b) Install the seatback cover with pad to the seatback frame with new hog ring.

(c) Install the headrest supports.

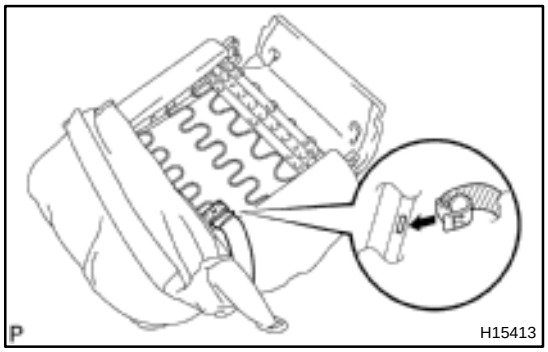

6. w/ Side airbag:
INSTALL SEATBACK COVER

(a) Install the seatback cover with new hog rengs to the seatback pad.

(b) Install the seatback cover with pad to the seatback frame with new hog rings.

(c) Install the seatback cover hook.

CAUTION:

Take care to hung the hook securely. Otherwise the seat cover slides, it might cause incorrect deploying.

(d) Install the headrest supports.

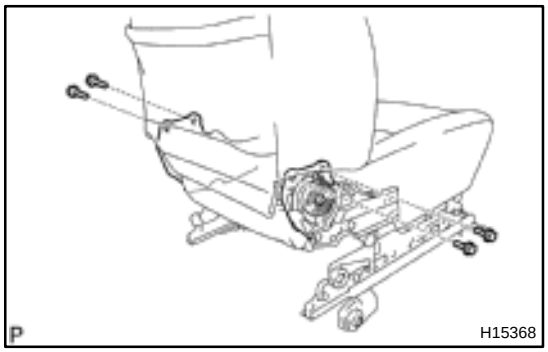

7. w/o Side airbag:
INSTALL SEATBACK ASSEMBLY

Install seatback assembly with 4 bolts.

Torque: 43 N·m (440 kgf·cm, 32 ft·lbf)

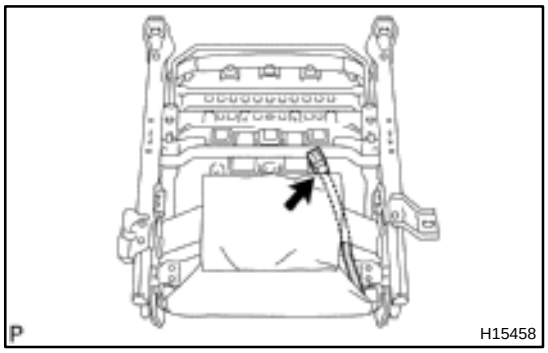

8. w/ Side airbag:
INSTALL SEATBACK ASSEMBLY

(a) Install the 4 bolts and seatback assembly.
(b) Install the side airbag connector from the under the seat.
(c) Install the clamp from wire harness of side airbag removed under the seat.

9. INSTALL SEAT CUSHION INNER SHIELD

10. INSTALL FRONT SEAT INNER BELT

Install the front seat inner belt with the bolt.

Torque: 41 N·m (420 kgf·cm, 30 ft·lbf)

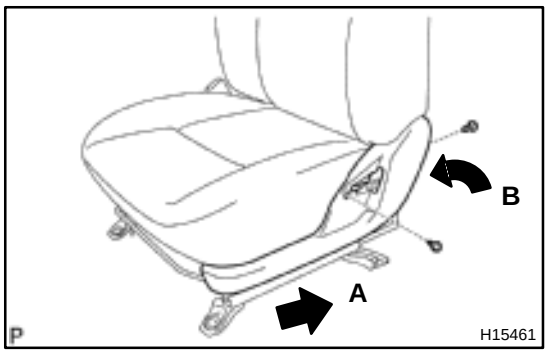

11. INSTALL SEAT CUSHION SHIELD

Install the 2 screws and seat cushion sushion shield as shown in the illustration.

HINT:

Install the seat cushion shield in order A, B as shown in the illustration.

12. INSTALL RECLINING RELEASE HANDLE

13. INSTALL HEADREST

BO3T5–01

INSPECTION

CAUTION:

Replace the seat belt assembly (outer belt, inner belt, bolts, nuts or sill–bar) if it has been used in a severe impact. The entire assembly should be replaced even if damage is not obvious.

1. RUNNING TEST (IN SAFE AREA)

(a) Fasten the front seat belts.

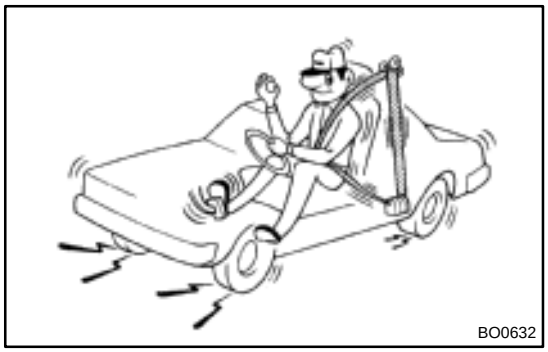
BO0632

(b) Drive the car at 10 mph (16 km/h) and slam on the brakes. Check that the belt locks and cannot be extended at this time.

HINT:

Conduct this test in a safe area. If the belt does not lock, remove the belt mechanism assembly and conduct the following static check. Also, whenever installing a new belt assembly, verify the proper operation before installation.

2. Driver's seat belt (ELR):

STATIC TEST

(a) Make sure that the belt locks when pulled out quickly.

(b) Remove the locking retractor assembly.

(c) Tilt the retractor slowly.

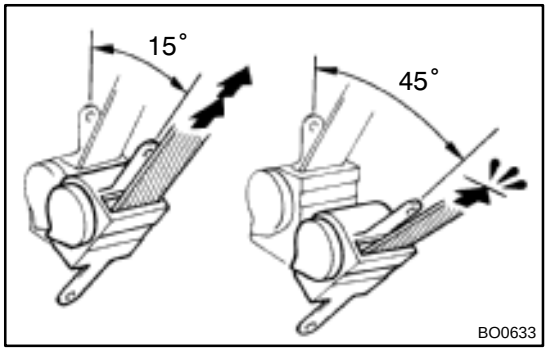

BO0633

(d) Make sure that belt can be pulled out at a tilt of 15 degrees or less, and cannot be pulled out over 45 degrees of tilt.

If a problem is found, replace the assembly.

3. Except driver's seat belt (ALR/ELR):

STATIC TEST

(a) Make sure that the belt locks when pulled out quickly.

(b) Remove the locking retractor assembly.

(c) Pull out the whole belt and measure the length of the whole belt.

Then retract the belt slightly and pull it out again.

(d) Make sure that the belt cannot be extended further.

If a problem is found,replace the assembly.

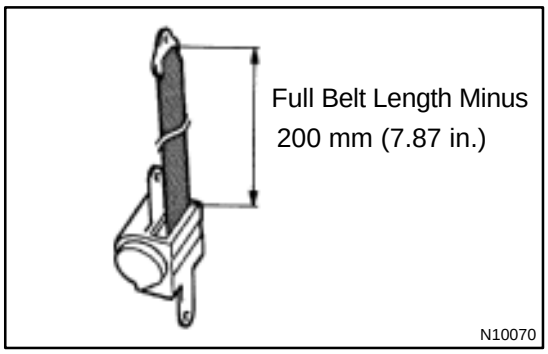

(e) Retract whole belt, then pull out the belt until 200 mm (7.87 in.) of belt remains retracted.

(f) Tilt the retractor slowly.

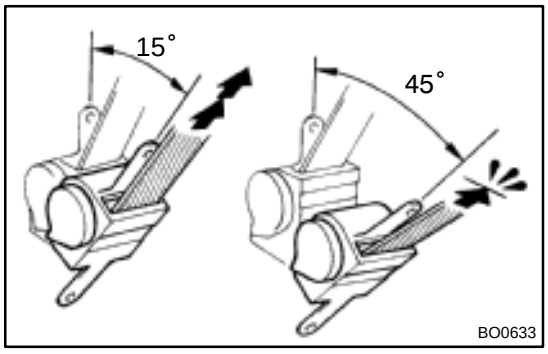

(g) Make sure that the belt can be pulled out at a tilt of 15 degrees or less, and cannot be pulled out at over 45 degrees of tilt.

If problem is found, replace the assembly.

SEAT BELT PRETENSIONER

BO3T6–01

REMOVAL

NOTICE:

- **If the wiring connector of the seat belt pretensioner is disconnected with the ignition switch at ON or ACC, diagnostic trouble codes will be recorded.**
- **Never use seat belt pretensioner from another vehicle. When replacing parts, replace them with new parts.**

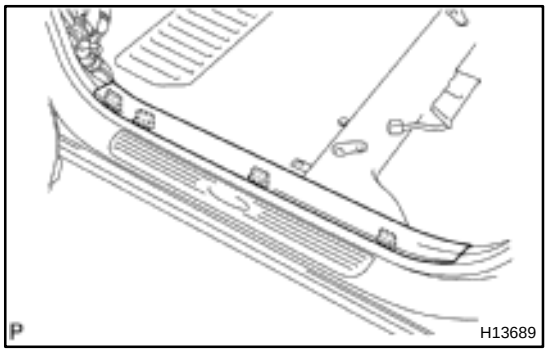

1. REMOVE FRONT DOOR INSIDE SCUFF PLATE

Using a screwdriver, remove the front door inside scuff plate.

HINT:

Tape the screwdriver tip before use.

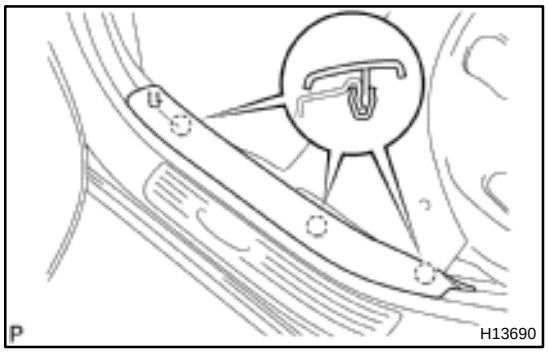

2. REMOVE REAR DOOR INSIDE SCUFF PLATE

Using a screwdriver, remove the rear door inside scuff plate.

HINT:

Tape the screwdriver tip before use.

3. REMOVE FRONT DOOR OPENING TRIM

4. REMOVE REAR DOOR OPENING TRIM

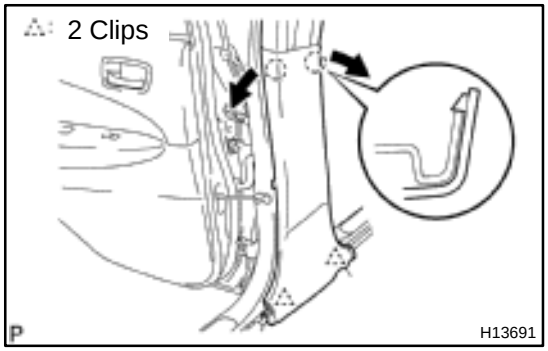

5. REMOVE CENTER PILLAR LOWER GARNISH

Remove the center pillar lower garnish as shown in the illustration.

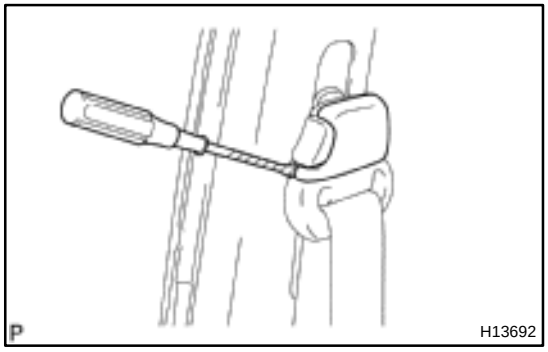

6. REMOVE FRONT SEAT OUTER BELT

(a) Using a screwdriver, remove the shoulder anchor cover.

HINT:

Tape the screwdriver tip before use.

(b) Remove the bolt and shoulder anchor.

(c) Using a screwdriver, remove the floor anchor cover.

HINT:

Tape the screwdriver tip before use.

(d) Remove the bolt and floor anchor.

(e) Driver's side:
Remove the retractor of front seat outer belt.

CAUTION:
Never disassemble the front seat outer belt.
NOTICE:
When removing the retractor of front seat outer belt, take care not to pull the seat belt pretensioner wire harness.

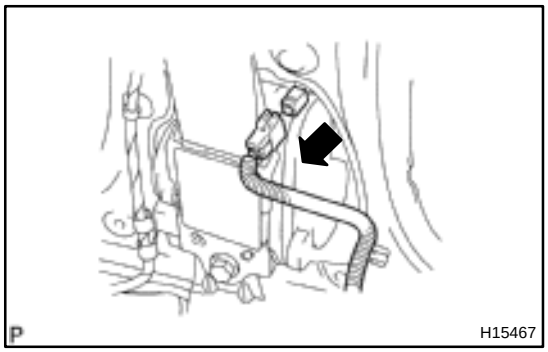

(1) Disconnect the pretensioner connector as shown in the illustration.
(2) Disconnect the tension reducer connector.

CAUTION:
When removing the seat belt pretensioner, work must be started 90 seconds after the ignition switch is turned to the "LOCK" position and the negative (–) terminal cable is disconnected from the battery.
NOTICE:
When handling the pretensioner connector and tensionreducer, take care not to damage the harness.

(3) Remove the bolts and retractor of front seat outer belt.

(f) Except driver's side:
Remove the retractor of front seat outer belt.

CAUTION:
Never disassemble the front seat outer belt.
NOTICE:
When removing the retractor of front seat outer belt, take care not to pull the seat belt pretensioner wire harness.

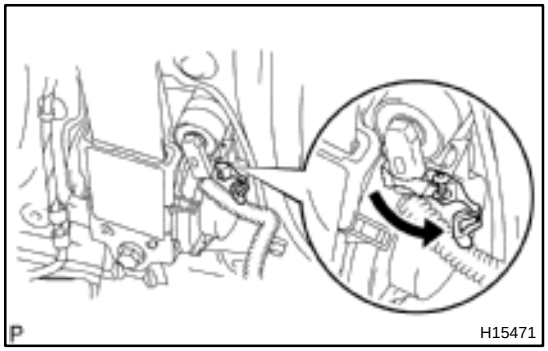

(1) Disconnect the pretensioner connector as shown in the illustration.

CAUTION:
When removing the seat belt pretensioner, work must be started 90 seconds after the ignition switch is turned to the "LOCK" position and the negative (–) terminal cable is disconnected from the battery.
NOTICE:
When handling the pretensioner connector and tensionreducer, take care not to damage the harness.

(2) Remove the bolts and retractor of front seat outer belt.

BO3T8–01

DISPOSAL

HINT:

When scrapping vehicles equipped with a seat belt pretensioner or disposing of a front seat outer belt (with seat belt pretensioner) always first activate the seat belt pretensioner in accordance with the procedure described below. If any abnormality occurs in the seat belt pretensioner operation, contact the SERVICE DEPT. of the TOYOTA MOTOR SALES, USA, INC.

CAUTION:

- **Never dispose of the front seat outer belt which has an inactivated pretensioner.**
- **The seat belt pretensioner produces a sizeable exploding sound when it activates, so perform the operation out–of–door and where it will not create a nuisance to nearby residents.**

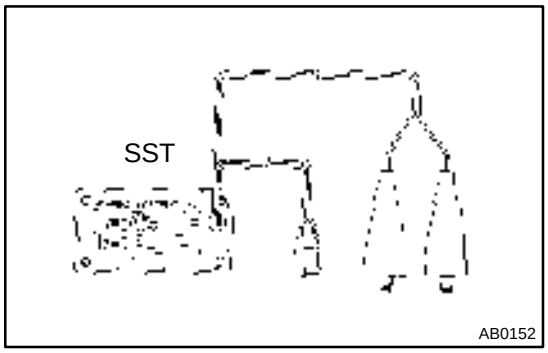

- **When activating the seat belt pretensioner, always use the specified SST. (SRS Airbag Deployment Tool) Perform the operation in a place away from electrical noise.**
  SST 09082–00700
- **When activating a front seat outer belt (with seat belt pretensioner), perform the operation at least 10 m (33 ft) away from the front seat outer belt.**
- **The front seat outer belt (with seat belt pretensioner) is very hot when the pretensioner is deployed, so leave it alone for at least 30 minutes after deployment.**
- **Use gloves and safety glasses when handling a front seat outer belt with activated pretensioner.**
- **Always wash your hands with water after completing the operation.**
- **Do not apply water, etc. to a front seat outer belt with the activated pretensioner.**

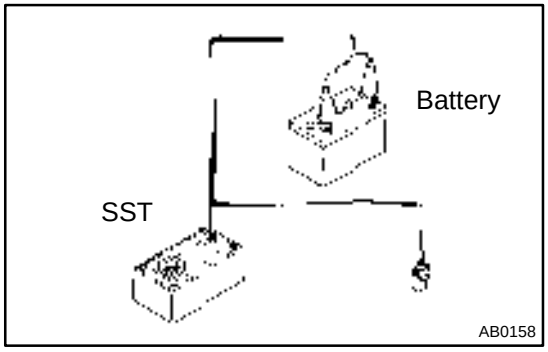

1. SEAT BELT PRETENSIONER ACTIVATION WHEN SCRAPPING VEHICLE

HINT:

Have a battery ready as the power source to activate the seat belt pretensioner.

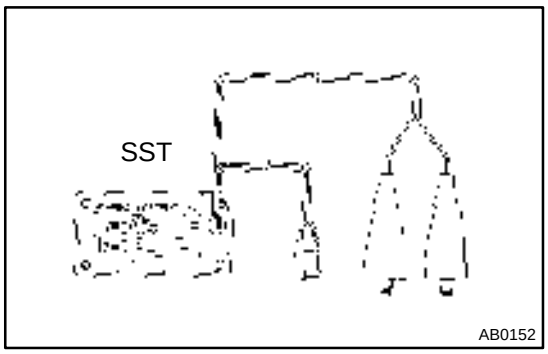

(a) Check the functioning of SST.

CAUTION:

When activating the seat belt pretensioner, always use the specified SST: SRS Airbag Deployment Tool.

SST

Driver's side: 09082–00700, 09082–00730

Except driver's side: 09082–00700, 09082–00740

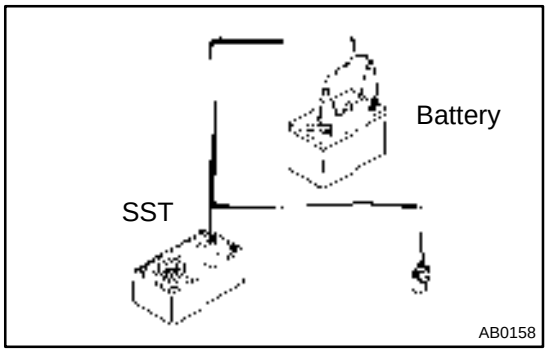

(1) Connect the SST to the battery.

Connect the red clip of the SST to the battery positive (+) terminal and the black clip to the battery negative (–) terminal.

HINT:

Do not connect the yellow connector which will be connected with the seat belt pretensioner.

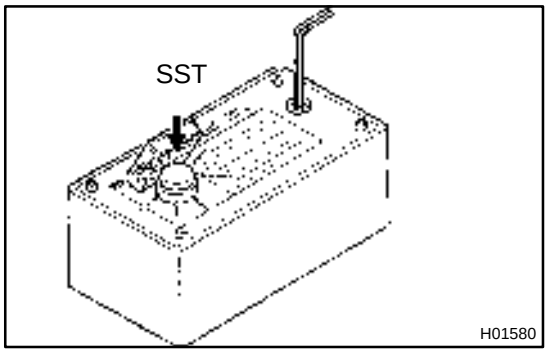

(2) Press the SST activation switch, and check the LED of the SST activation switch lights up.

CAUTION:

If the LED lights up when the activation switch is not being pressed, SST malfunction is probable, so definitely do not use the SST.

(3) Disconnect the SST from the battery.

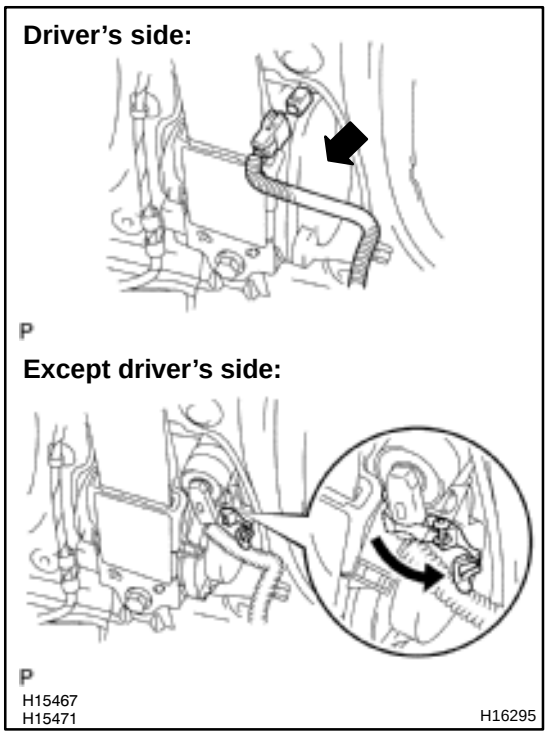

(b) Disconnect the pretensioner connector.

Disconnect the pretensioner connector as shown in the illustration.

NOTICE:

When handling the pretensioner connector, take care not to damage the wire harness.

(c) Install the SST.

(1) Buckle the front seat belt and check that there is no looseness and slack in the front seat inner belt and front seat outer belt.

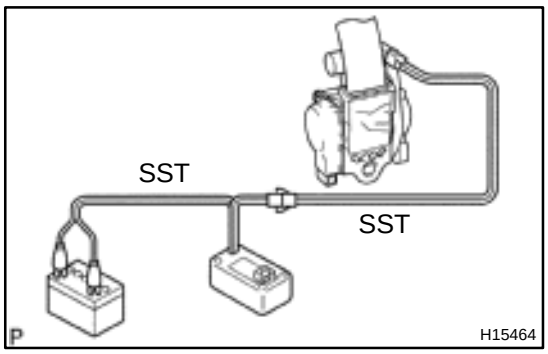

(2) Connect the 2 SST, then connect them to the seat belt pretensioner.

SST

Driver's side: 09082–00700, 09082–00730

Except driver's side: 09082–00700, 09082–00740

NOTICE:

To avoid damaging the SST connector and wire harness.

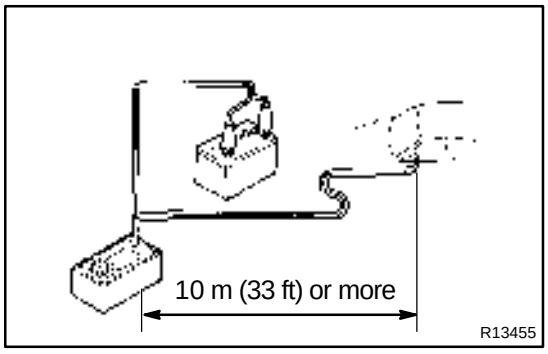

(3) Move the SST to at least 10 m (33 ft) away from the front of the vehicle.

(4) Close all the doors and windows of the vehicle.

NOTICE:

Take care not to damage the SST wire harness.

(5) Connect the SST red clip to the battery positive (+) terminal and the black clip to the negative (–) terminal.

(d) Activate the seat belt pretensioner.

(1) Confirm that no one is inside the vehicle or within 10 m (33 ft) area around the vehicle.

(2) Press the SST activation switch and activate the seat belt pretensioner.

HINT:

The seat belt pretensioner operates simultaneously as the LED of the SST activation switch lights up.

(e) Dispose of the front seat outer belt (with seat belt pretensioner).

CAUTION:

- **The front seat outer belt is very hot when the seat belt pretensioner is activated, so leave it alone for at least 30 minutes after activation.**
- **Use gloves and safety glasses when handling a front seat outer belt with the activated seat belt pretensioner.**
- **Always wash your hands with water after completing the operation.**
- **Do not apply water, etc. to a front seat outer belt with the activated seat belt pretensioner.**

HINT:

When scrapping a vehicle, activate the seat belt pretensioner and scrap the vehicle with the activated front seat outer belt still installed.

2. ACTIVATION WHEN DISPOSING OF FRONT SEAT OUTER BELT ONLY

NOTICE:

- **When disposing of the front seat outer belt (with seat belt pretensioner) only, never use the customer's vehicle to activate the seat belt pretensioner.**

- **Be sure to follow the procedure given on the next page when activating the seat belt pretensioner.**

HINT:
Have a battery ready as the power source when activating the seat belt pretensioner.

(a) Remove the front seat outer belt (See page BO–90).

HINT:
Cut the belt near the seat belt retractor.

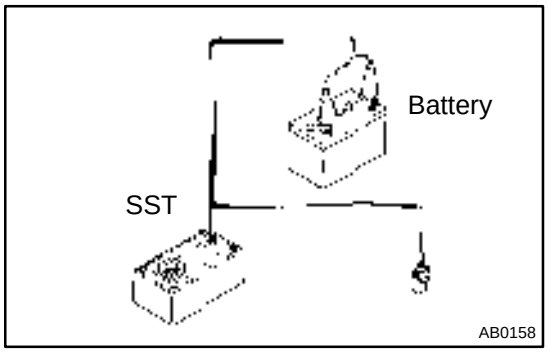

(b) Check the functioning of SST.
(See step 1–(a))
SST
Driver's side: 09082–00700, 09082–00730
Except driver's side: 09082–00700, 09082–00740

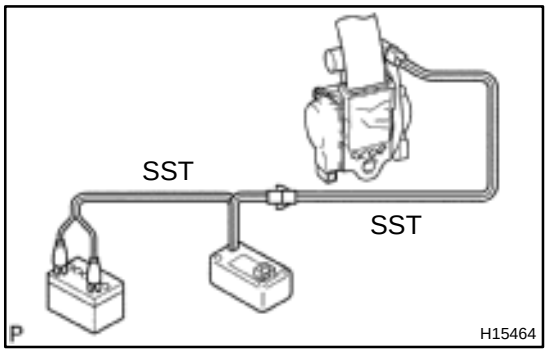

(c) Install the SST.
(1) Connect the 2 SST, then connect them to the seat belt pretensioner.
SST
Driver's side: 09082–00700, 09082–00730
Except driver's side: 09082–00700, 09082–00740

NOTICE:
To avoid damaging the SST connector and wire harness.

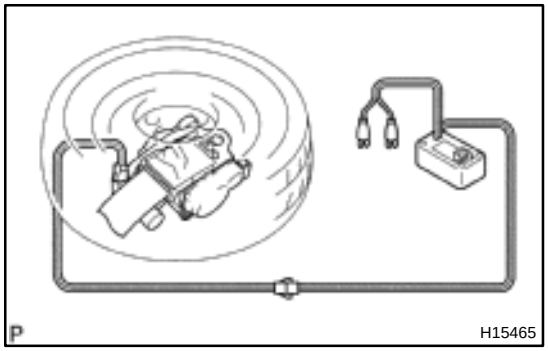

(2) Place the front seat outer belt on the ground and cover it with the disc wheel with tire.

NOTICE:
Place the front seat outer belt as shown in the illustration. Also, secure some slack for the SST wire harness inside the tire.

(3) Move the SST at least 10 m (33 ft) away from the disc wheel.

NOTICE:
Take care not to damage the SST wire harness.

(d) Activate the seat belt pretensioner.
(1) Connect the SST red clip to the battery positive (+) terminal and black clip to the battery negative (–) terminal.
(2) Check that no one is within 10 m (33 ft) area around the disc wheel.
(3) Press the SST activation switch and activate the seat belt pretensioner.

HINT:
The seat belt pretensioner operates simultaneously as the LED of the SST activation switch lights up.

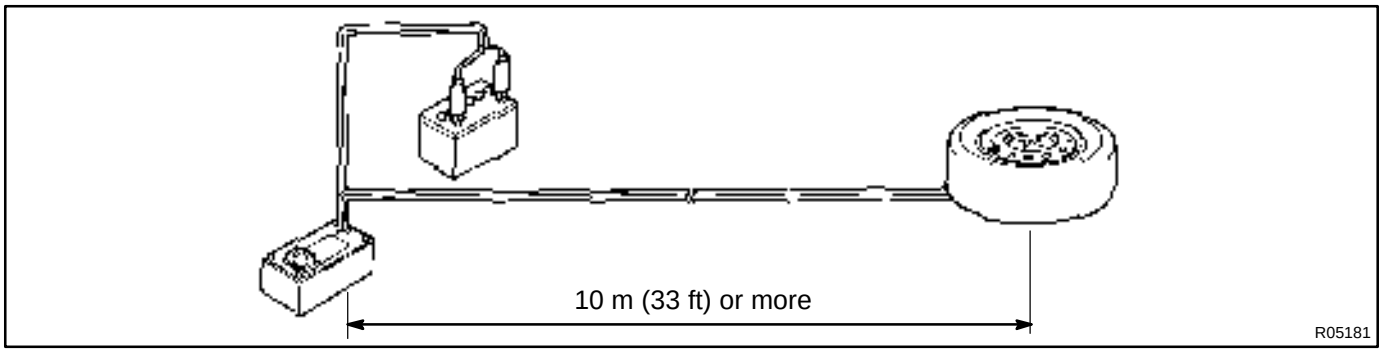

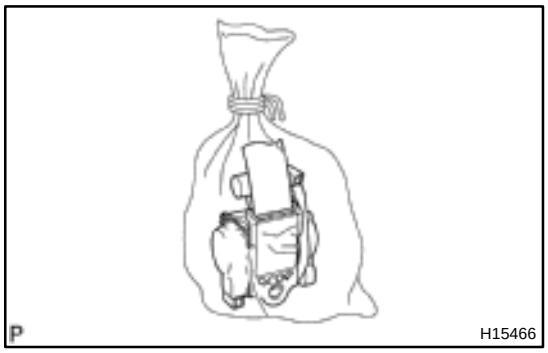

(e) Dispose of the front seat outer belt (with seat belt pretensioner).

CAUTION:

- **The front seat outer belt is very hot when the seat belt pretensioner is activated, so leave it alone for at least 30 minutes after activation.**
- **Use gloves and safety glasses when handling a front seat outer belt with the activated seat belt pretensioner.**
- **Always wash your hands with water after completing the operation.**
- **Do not apply water, etc. to a front seat outer belt with the activated seat belt pretensioner.**

(1) Remove the disc wheel and SST.
(2) Place the front seat outer belt in a vinyl bag, tie the end tightly and dispose of it in the same way as other general parts dispose.

BO3TA–01

INSTALLATION

NOTICE:

- **Never use seat belt pretensioner from another vehicle. When replacing parts, replace them with new parts.**
- **Make sure that the front seat outer belt is installed with the specified torque.**
- **If the front seat outer belt has been dropped, or there are cracks, dents or other defects in the case or connector, replace the front seat outer belt with a new one.**
- **When installing the front seat outer belt, take care that the wiring does not interfere with other parts and is not pinched between other parts.**

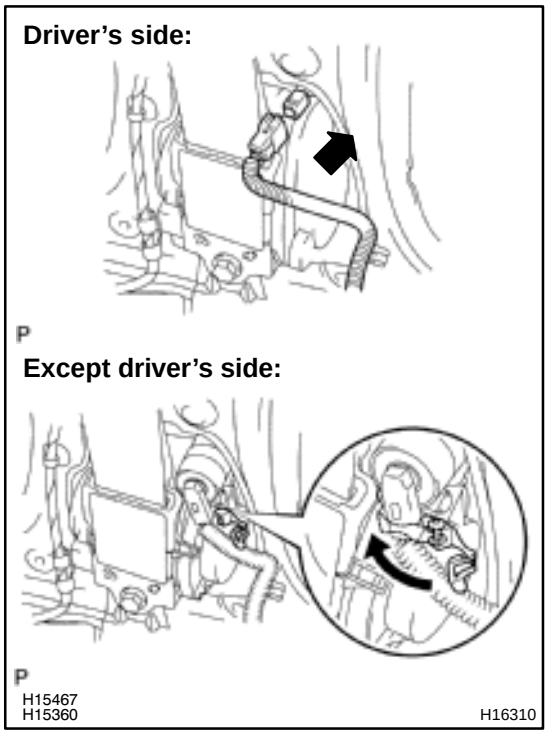

1. INSTALL FRONT SEAT OUTER BELT

(a) Install the retractor of front seat outer belt.

(1) Install the retractor of front seat outer belt with the bolt.

Torque: 4.9 N·m (50 kgf·cm, 43 in.·lbf)

(2) Connect the pretensioner connector as shown in the illustration.

(3) Connect the tension reducer connector.

NOTICE:

When handling the pretensioner connector and tensionreducer, take care not to damage the wire harness.

(b) Install the floor anchor with the bolt.

Torque: 42 N·m (430 kgf·cm, 31 ft·lbf)

(c) Install the floor anchor cover.

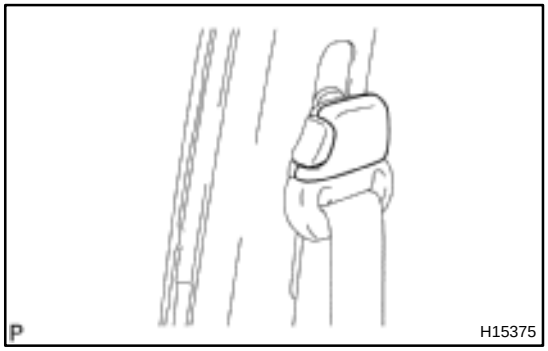

(d) Install the shoulder anchor with the bolt.

Torque: 42 N·m (430 kgf·cm, 31 ft·lbf)

(e) Install the shoulder anchor cover.

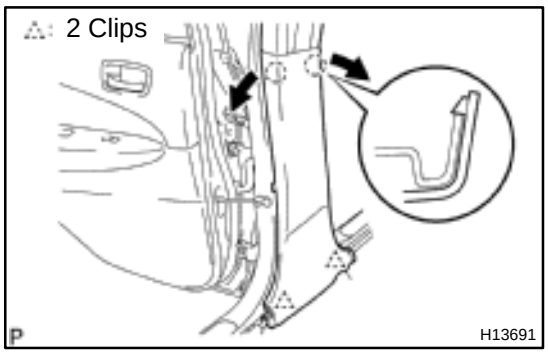

2. INSTALL CENTER PILLAR LOWER GARNISH

Install the center pillar lower garnish to the body.

3. INSTALL FRONT DOOR OPENING TRIM

4. INSTALL REAR DOOR OPENING TRIM

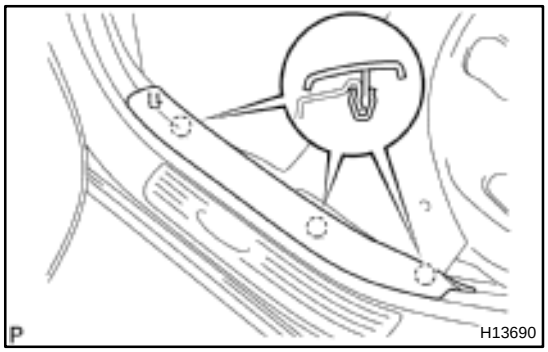

5. INSTALL REAR DOOR INSIDE SCUFF PLATE

Install the rear door inside scuff plate to the body.

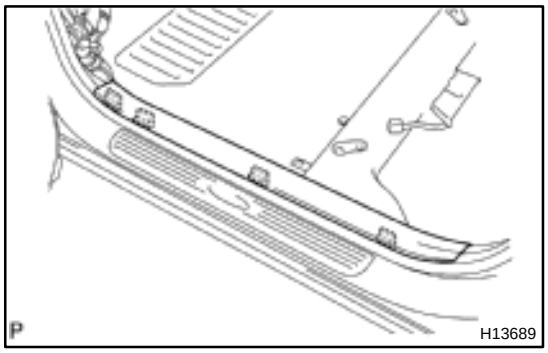

6. INSTALL FRONT DOOR INSIDE SCUFF PLATE

Install the front door inside scuff plate to the body.

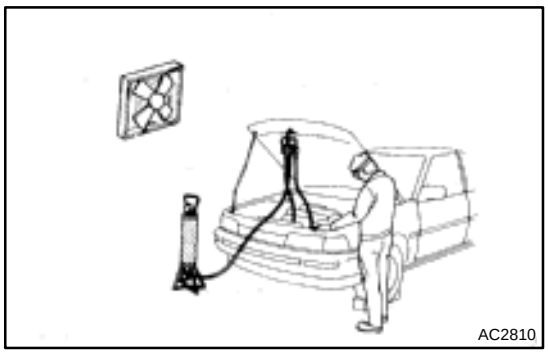
AC2810

AIR CONDITIONING SYSTEM

AC0Y9–05

PRECAUTION

1. DO NOT HANDLE REFRIGERANT IN AN ENCLOSED AREA OR WEAR A NAKED FLAME

2. ALWAYS WEAR EYE PROTECTION

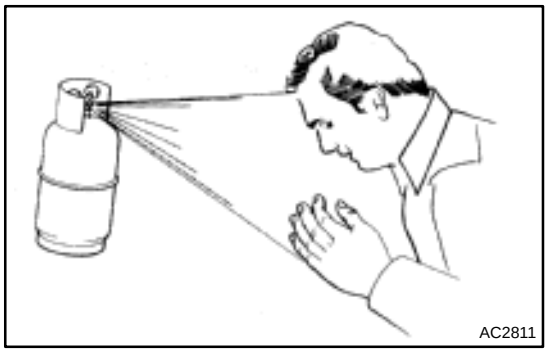
AC2811

3. BE CAREFUL NOT TO GET LIQUID REFRIGERANT IN YOUR EYES OR ON YOUR SKIN

If liquid refrigerant gets in your eyes or on your skin.

(a) Wash the area with lots of cool water.

CAUTION:

Do not rub your eyes or skin.

(b) Apply clean petroleum jelly to the skin.

(c) Go immediately to a physician or hospital for professional treatment.

4. NEVER HEAT CONTAINER OR EXPOSE IT TO NAKED FLAME

5. BE CAREFUL NOT TO DROP CONTAINER AND NOT TO APPLY PHYSICAL SHOCKS TO IT

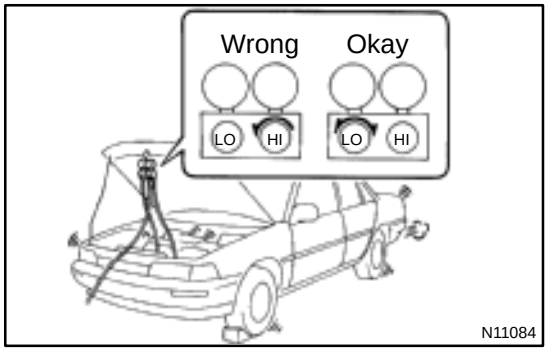

N11084

6. DO NOT OPERATE COMPRESSOR WITHOUT ENOUGH REFRIGERANT IN REFRIGERATION SYSTEM

If there is not enough refrigerant in the refrigerant system oil lubrication will be insufficient and compressor burnout may occur, so that care to avoid this, necessary care should be taken.

7. DO NOT OPEN PRESSURE MANIFOLD VALVE WHILE COMPRESSOR IS OPERATE

If the high pressure valve is opened, refrigerant flows in the reverse direction and could cause the charging cylinder to rupture, so open and close the only low pressure valve.

8. BE CAREFUL NOT TO OVERCHARGE SYSTEM WITH REFRIGERANT

If refrigerant is overcharged, it causes problems such as insufficient cooling, poor fuel economy, engine overheating etc.

9. SUPPLEMENTAL RESTRAINT SYSTEM (SRS)

The PRIUS is equipped with an SRS (Supplemental Restraint System) such as the driver, front passenger and side airbag. Failure to carry out service operation in the correct sequence could cause the SRS to unexpectedly deploy during servicing, possibly leading to a serious accident. Before servicing (including removal or installation of parts, inspection or replacement), be sure to read the precautionary notices in the RS section.

AC0YB–04

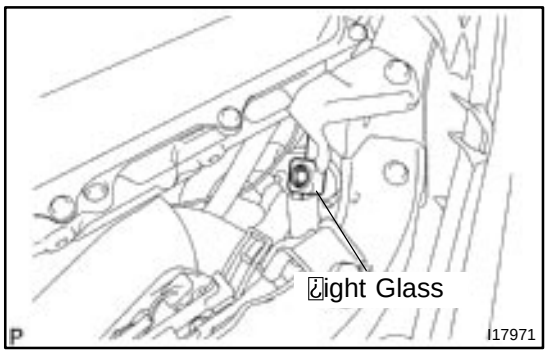

ON–VEHICLE INSPECTION

1. INSPECT REFRIGERANT VOLUME

Observe the sight glass on the liquid tube.

Test conditions:

- MAX. switch ON
- Blower speed control set at ”HI”
- Temperature control set at ”MAX. COOL”
- Running engine at 1,500 rpm
- Fully open the doors

Item	Symptom	Amount of refrigerant	Remedy
1	Bubbles present in sight glass	Insufficient*	(1) Check for gas leakage with gas leak detector and repair if necessary (2) Add refrigerant until bubbles disappear
2	No bubbles present in sight glass	None, sufficient or too much	Refer item 3 and 4
3	No temperature difference between compressor inlet and outlet	Empty or nearly empty	(1) Check for gas leakage with gas leak detector and repair if necessary (2) Add refrigerant until bubbles disappear
4	Temperature between compressor inlet and outlet is noticeably different	Correct or too much	Refer to items 5 and 6
5	Immediately after air conditioning is turned off, refrigerant in sight glass stays clear	Too much	(1) Discharge refrigerant (2) Evacuate air and charge proper amount of purified refrigerant
6	When air conditioning is turned off, refrigerant foams and then stays clear	Correct	–

*: Bubbles in the sight glass with ambient temperatures higher than usual can be considered normal if cooling is sufficient.

2. INSPECT REFRIGERANT PRESSURE WITH MANIFOLD GAUGE SET

This is a method in which the trouble is located by using a manifold gauge set. Read the manifold gauge pressure when the these conditions are established.

Test conditions:

- Temperature at the air inlet with the switch set at RECIRC is 30 – 35 ˚C (86 – 95 ˚F)
- Engine running at 1500 rpm
- Blower speed control switch at ”HI” position
- Temperature control dial on ”COOL” position

HINT:

It should be noted that the gauge indications may vary slightly due to ambient temperature conditions.

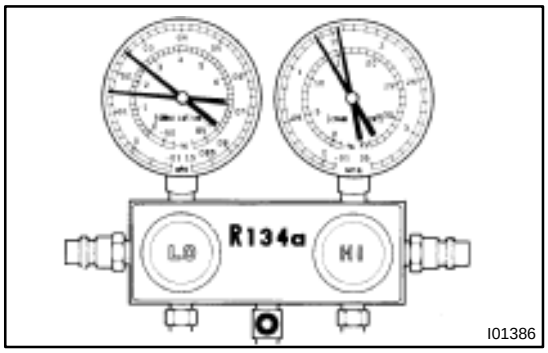

(1) Normally functioning refrigeration system.

Gauge reading:

Low pressure side:

0.15 – 0.25 MPa (1.5 – 2.5 kgf/cm^2)

High pressure side:

1.37 – 1.57 MPa (14 – 16 kgf/cm$^{2)}$

(2) Moisture present in refrigeration system.

Condition: Periodically cools and then fails to cool

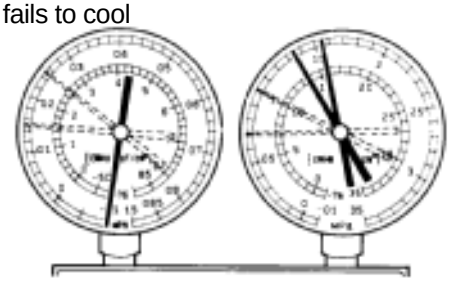

I01387

Symptom seen in refrigeration system	Probable cause	Diagnosis	Remedy
During operation, pressure on low pressure side sometimes become a vacuum and sometime normal	Moisture entered in refrigeration system freezes at expansion valve orifice and temporarily stops cycle, by normal state is restored after a time when the ice melts	• Drier oversaturated state • Moisture in refrigeration system freezes at expansion valve orifice and blocks circulation of refrigerant	(1) Replace condenser (2) Remove moisture in cycle through repeatedly evacuating air (3) Charge proper amount of new refrigerant

(3) Insufficient cooling

Condition: Insufficient cooling

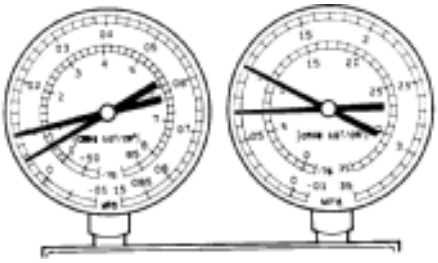

I01388

Symptom seen in refrigeration system	Probable cause	Diagnosis	Remedy
• Pressure low on both low and high pressure sides • Bubbles seen in sight glass continuously • Insufficient cooling performance	Gas leakage at some place in refrigeration system	• Insufficient refrigerant in system • Refrigerant leaking	(1) Check for gas leakage with gas leak detector and repair if necessary (2) Charge proper amount of refrigerant (3) If indicated pressure value is near 0 when connected to gauge, create the vacuum after inspecting and repairing the location of the leak

(4) Poor circulation of refrigerant

Condition: Insufficient cooling

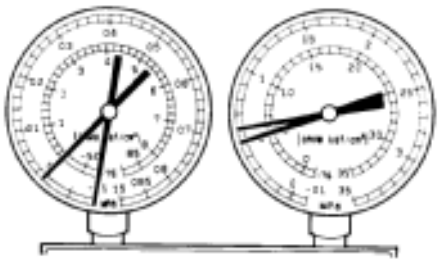

I01389

Symptom seen in refrigeration system	Probable cause	Diagnosis	Remedy
• Pressure low in both low and high pressure sides • Frost on tube from receiver to unit	Refrigerant flow obstructed by dirt in receiver	Receiver clogged	Replace condenser

(5) Refrigerant does not circulate

Condition: Does not cool (Cools from time to time in some cases)

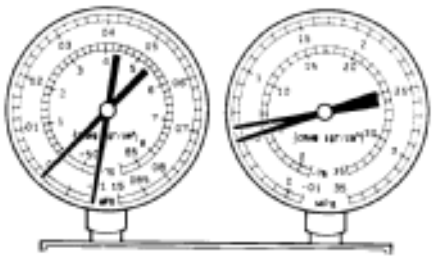

I01449

Symptom seen in refrigeration system	Probable cause	Diagnosis	Remedy
• Vacuum indicated on low pressure side, very low pressure indicated on high pressure side • Frost or dew seen on piping before and after condenser/ drier or expansion valve	• Refrigerant flow obstructed by moisture or dirt in refrigeration system • Refrigerant flow obstructed by gas leakage from expansion valve	Refrigerant does not circulate	(1) Check expansion valve (2) Clean out dirt in expansion valve by blowing with air (3) Replace condenser (4) Evacuate air and charge new refrigerant to proper amount (5) For gas leakage from expansion valve, replace expansion valve

(6) Refrigerant overcharged or insufficient cooling of condenser

Condition: Insufficient cooling

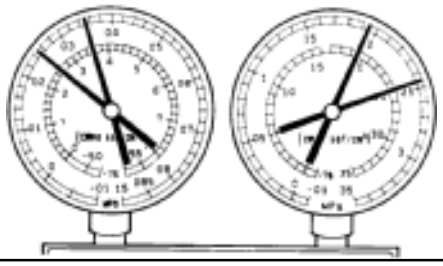

I01390

Symptom seen in refrigeration system	Probable cause	Diagnosis	Remedy
• Pressure too high on both low and high pressure sides • No air bubbles seen through the sight glass even when the engine rpm is lowered	• Unable to develop sufficient performance due to excessive refrigeration system • Insufficient cooling of condenser	• Excessive refrigerant in cycle → refrigerant over charged • Condenser cooling → condenser fins clogged of condenser fan faulty	(1) Clean condenser (2) Check condenser fan motor operation (3) If (1) and (2) are in normal state, check amount of refrigerant Charge proper amount of refrigerant

(7) Air present in refrigeration system

Condition: Insufficient cooling

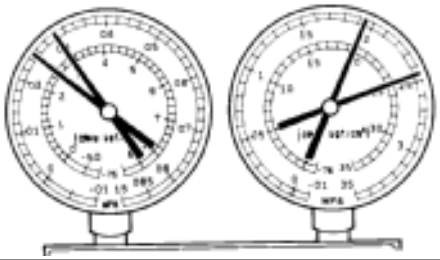

NOTE : These gauge indications are shown when the refrigeration system has been opened and the refrigerant charged without vacuum purging.

I01392

Symptom seen in refrigeration system	Probable cause	Diagnosis	Remedy
• Pressure too high on both low and high pressure sides • The low pressure piping hot to touch • Bubbles seen in sight glass	Air entered in refrigeration system	• Air present in refrigeration system • Insufficient vacuum purging	(1) Check compressor oil to see if it is dirty or insufficient (2) Evacuate air and charge new refrigerant

(8) Expansion valve improperly

Condition: Insufficient cooling

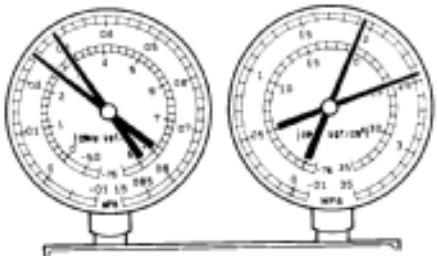

I01450

Symptom seen in refrigeration system	Probable cause	Diagnosis	Remedy
• Pressure too high on both low and high pressure sides • Frost or large amount of dew on piping on low pressure side	Trouble in expansion valve	• Excessive refrigerant in low pressure piping • Expansion valve opened too wide	Check expansion valve Replace if defective

(9) Defective compression compressor

Condition : Does not cool

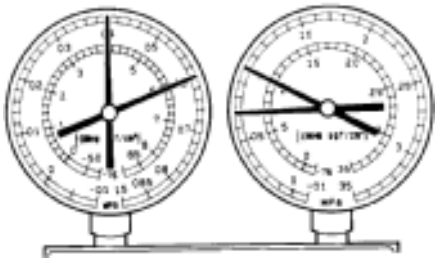

I01393

Symptom seen in refrigeration system	Probable cause	Diagnosis	Remedy
• Pressure too high on low and high pressure sides • Pressure too low on high pressure side	Internal leak in compressor	• Compression defective • Valve leaking or broken sliding parts	Repair or replace compressor

3. INSPECT FOR LEAKAGE OF REFRIGERANT

(a) Perform in these conditions:
- Stop engine.
- Secure good ventilation (If the gas leak detector may not react to volatile gases which are not refrigerant, such as evaporated gasoline and exhaust gas.)
- Repeat the test 2 or 3 times.
- Make sure that there is some refrigerant remaining in the refrigeration system.
  When compressor is OFF: approx. 392 – 588 kPa (4 – 6 kgf/ cm^2, 57 – 85 psi)

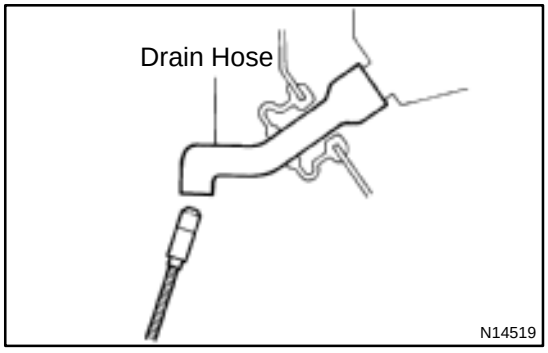

(b) Bring the gas leak detector close to the drain hose before performing the test.

HINT:
- After the blower motor has stopped, leave the cooling unit for more than 15 minutes.
- Expose the gas leak detector sensor under the drain hose.
- When bring the gas leak detector close to the drain hose, make sure that the gas leak detector does not react to the volatile gases.

If such reaction is unavoidable, the vehicle must be lifted up.

(c) If gas leak is not detected on the drain hose, remove the blower resistor from the cooling unit. Then insert the gas leak detector sensor into the unit and perform the test.

(d) Disconnect the connector and leave the pressure switch for approx. 20 minutes. Then bring the gas leak detector close to the pressure switch and perform the test.

(e) Bring the gas leak detector close to the refrigerant lines and perform the test.

4. INSPECT IDLE–UP SPEED

(a) Activate inspection mode (See page IN–10).

(b) Inspect idle–up speed when the these conditions are established.

Test conditions:

- Idle speed set correctly.
- Steering wheel straight ahead
- Blower speed control dial at HI
- A/C switch ON

Magnetic clutch condition	Idle speed
Magnetic clutch not engaged	1,000 ±50 rpm
Magnetic clutch engaged	1,000 ±50 rpm

If idle speed is not as specified, check the engine ECU and throttle body.

AC20C–03

CHARGING

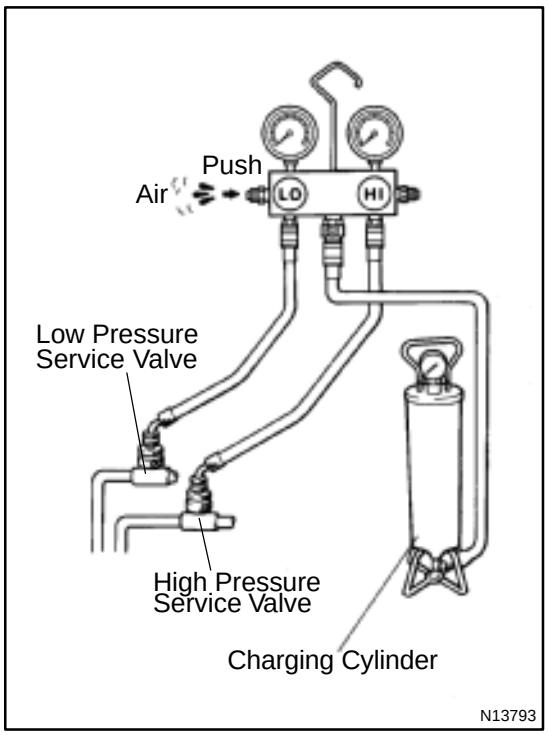

1. INSTALL CHARGING CYLINDER

HINT:

When handling the charging cylinder, always follow the directions given in the instruction manual.

(a) Charge the proper amount of refrigerant into the charging cylinder.

(b) Connect the center hose to the charging cylinder.

CAUTION:

Do not open both high and low hand valves of manifold gauge set.

(c) Open the valve of charging cylinder.

(d) Press the valve core on the side of manifold gauge and expel the air inside of the center hose.

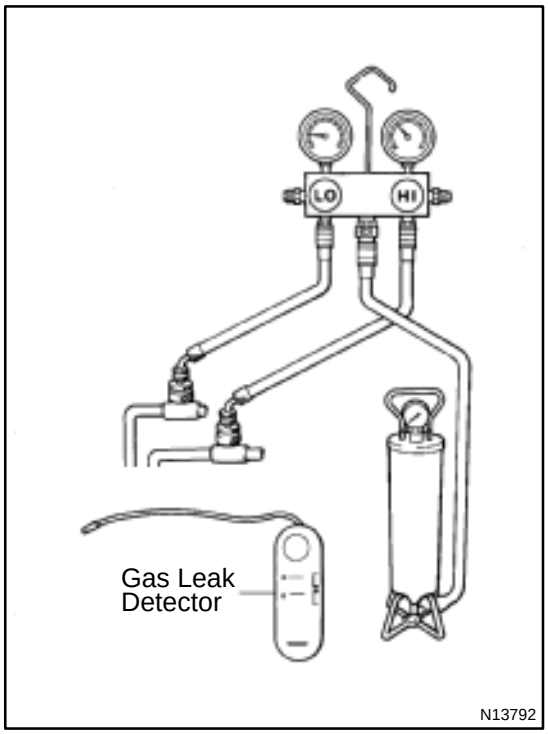

2. INSPECT REFRIGERATION SYSTEM FOR LEAKS

(a) Open the high pressure hand valve and charge refrigerant.

(b) When the low pressure gauge indicates 98 kPa (1 kgf/cm^2, 14 psi) close the high pressure hand valve.

(c) Using a gas leak detector, check the system for leakage.

If leak is found, repair the faulty component or connection.

CAUTION:

Use the refrigerant recovery/ recycling machine to recover the refrigerant whenever replacing parts.

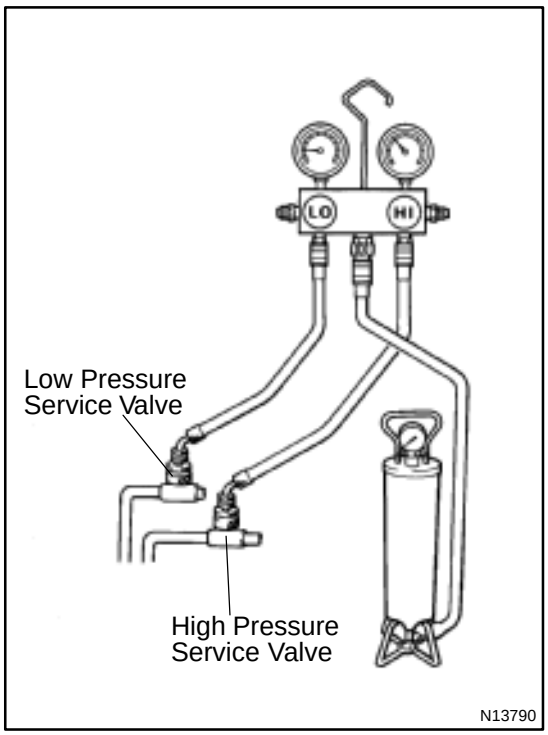

3. CHARGE REFRIGERANT INTO REFRIGERANT SYSTEM

If there is no leak after refrigerant leak check, charge the proper amount of refrigerant into refrigeration system.

CAUTION:

- **Never run the engine when charging the system through the high pressure side.**
- **Do not open the low pressure hand a valve when the system is being charged with liquid refrigerant.**

(a) Open the high pressure hand valve fully.

(b) Charge specified amount of refrigerant, then close the high pressure hand valve.

HINT:

A fully charged system is indicated by the sight glass being free of any bubbles.

(c) Charge partially refrigeration system with refrigerant.

(1) Set vehicle in these conditions:

- MAX. switch ON
- Blower speed control set at ”HI”
- Temperature control set at ”MAX. COOL”
- Air inlet control set at ”RECIRC”
- Running engine at 1,500 rpm
- Fully open doors

(2) Open the low pressure hand valve.

CAUTION:

Do not open the high pressure hand valve.

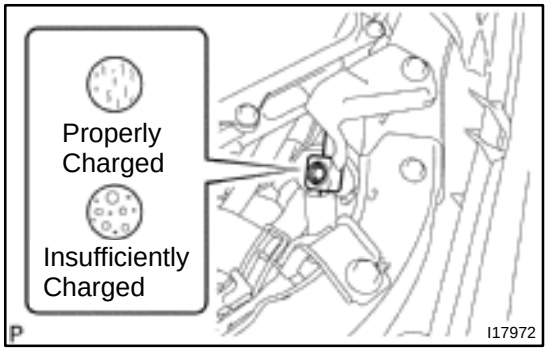

(d) Charge refrigerant until bubbles disappear and check the pressure on the gauge through the sight glass.

(e) Replenishment to be 100 ± 50 g after bubbles disapper.

AIR CONDITIONING UNIT

AC37J–01

COMPONENTS

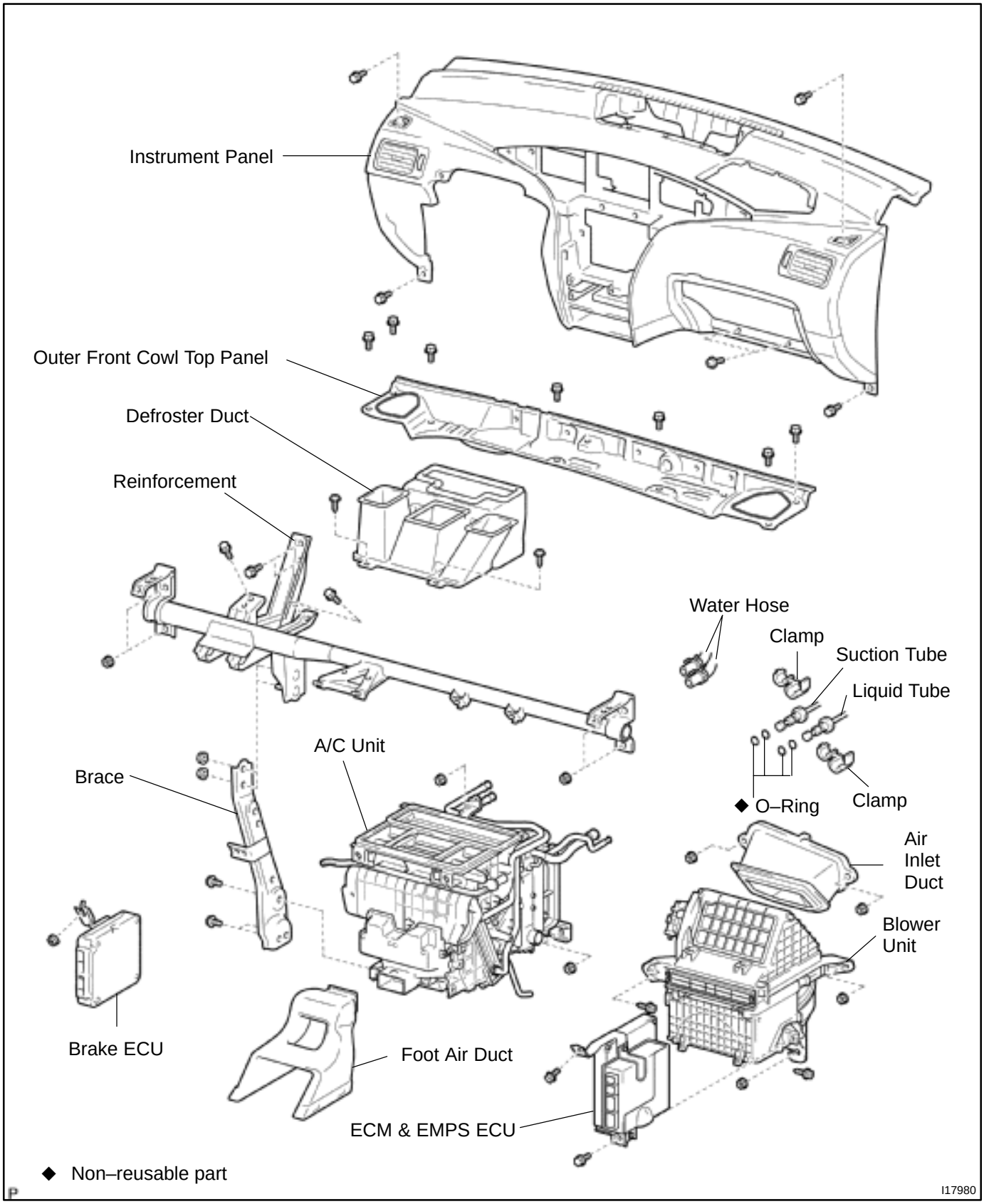

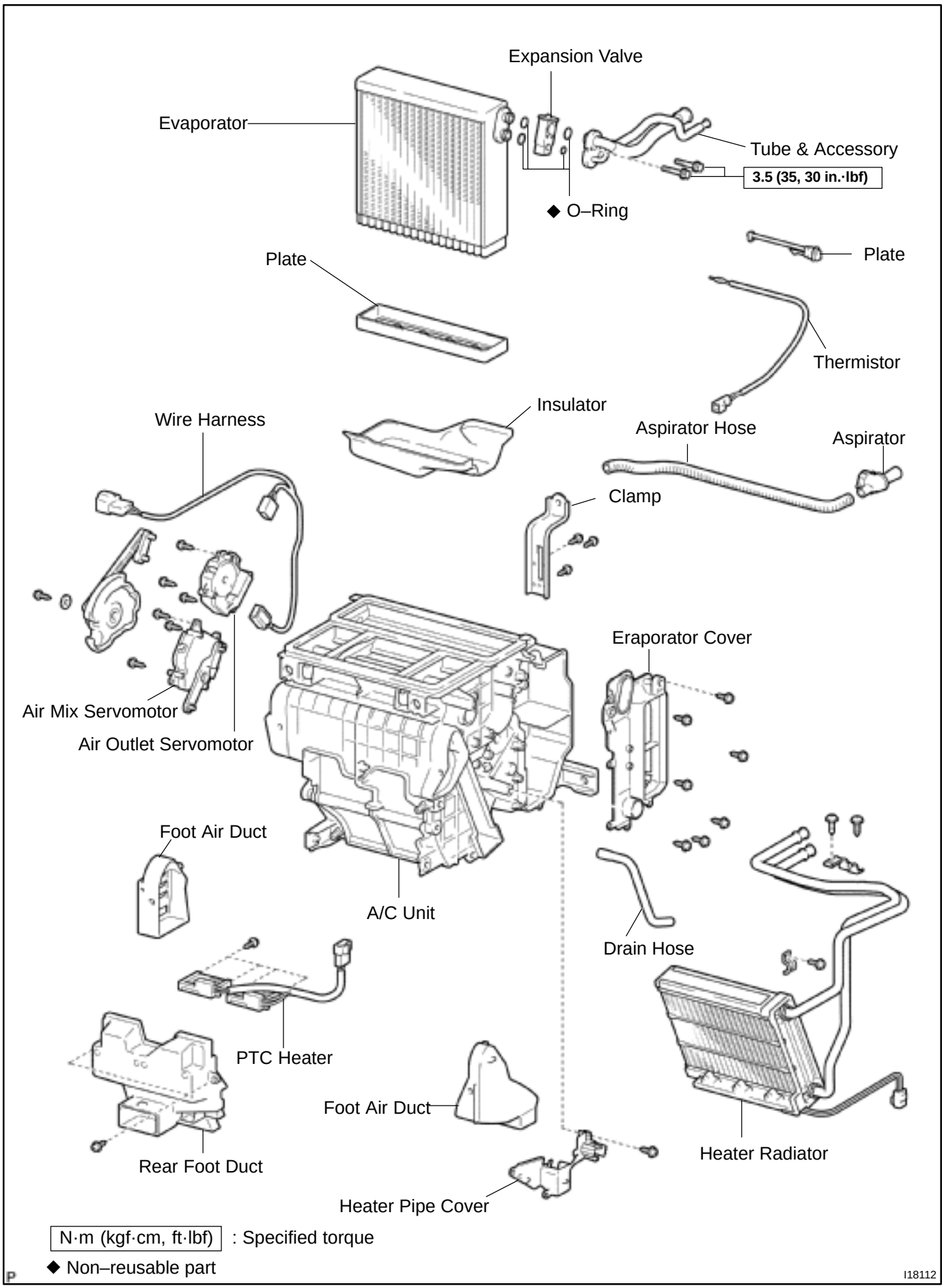
Expansion Valve
Evaporator
Tube & Accessory
3.5 (35, 30 in.·lbf)
◆ O–Ring
Plate
Plate
Thermistor
Insulator
Wire Harness
Aspirator Hose
Aspirator
Clamp
Eraporator Cover
Air Mix Servomotor
Air Outlet Servomotor
Foot Air Duct
A/C Unit
Drain Hose
PTC Heater
Foot Air Duct
Heater Radiator
Rear Foot Duct
Heater Pipe Cover
N·m (kgf·cm, ft·lbf) : Specified torque
◆ Non–reusable part
I18112

AC37K–01

REMOVAL

1. REMOVE FRONT WIPER AND OUTER FRONT COWL TOP PANEL (See page BO–32)

2. DISCHARGE REFRIGERANT FROM REFRIGERATION SYSTEM

HINT:

At the time of installation, please refer to the following item.

Evacuate air from refrigeration system.

Charge system with refrigerant and inspect for leakage of refrigerant.

Specified amount: 500 ± 50 g (17.64 ± 1.76 oz.)

3. DRAIN ENGINE COOLANT FROM RADIATOR

HINT:

It is not necessary to drain out all coolant.

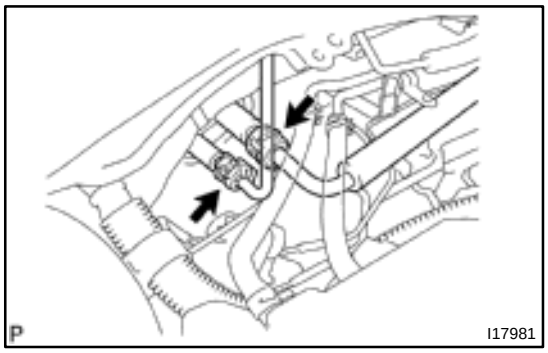

4. DISCONNECT LIQUID TUBE AND SUCTION HOSE

(a) Using SST, remove the 2 piping clamps.

SST 09870–00015 (Suction tube)
09870–00025 (Liquid tube)

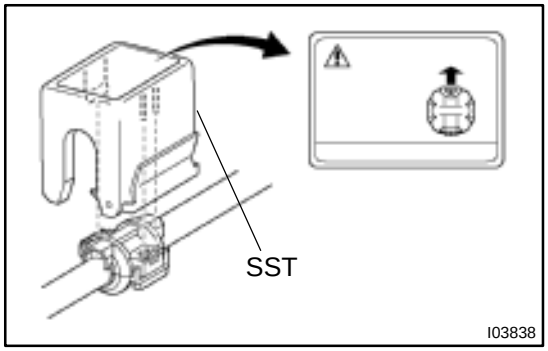

(1) Insert SST to piping clamp.

HINT:

Confirm the direction of the piping clamp claw and SST using the illustration showing on the caution label.

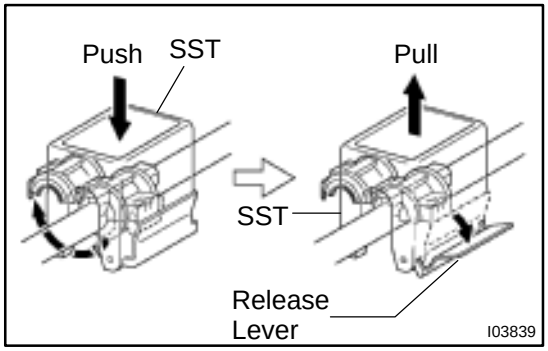

(2) Push down SST and release the clamp lock.

NOTICE:

Be careful not to deform the tubes, when pushing SST.

(3) Pull SST slightly and push the release lever, then remove the piping clamp with SST.

(4) Remove the piping clamp from SST.

(b) Disconnect the both tubes.

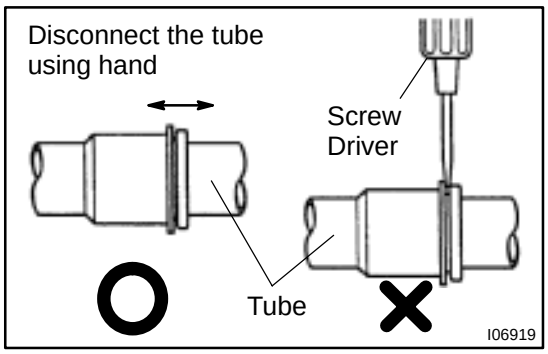

NOTICE:

- **Do not use tools like screwdriver to remove the tube.**
- **Cap the open fittings immediately to keep moisture or dirt out of the system.**

HINT:

At the time of reassembly, please refer to the following item.

Lubricate 4 new O–rings with compressor oil and install them to the valve.

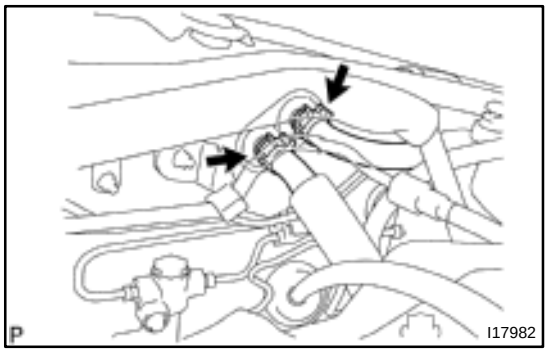

5. DISCONNECT WATER HOSES FROM HEATER RADIATOR PIPES

(a) Using pliers, grip the claw of the hose clip and slide the hose clip along the hose.

(b) Disconnect the heater hoses.

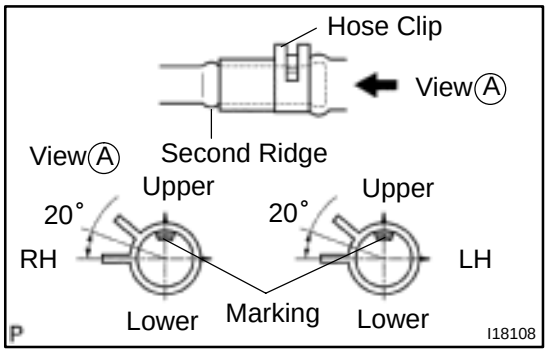

HINT:

At the time of installation, please refer to the following item.

Push the water hose onto the heater radiator pipe as far as second ridge on the pipe and install the hose clip.

6. REMOVE INSTRUMENT PANEL AND REINFORCEMENT (See page BO–62)

7. REMOVE BLOWER UNIT (See page AC–32)

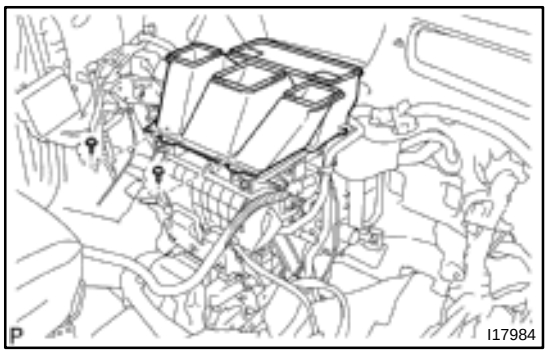

8. REMOVE A/C UNIT

(a) Remove the 2 screws and defroster duct.

(b) Remove the foot air duct.

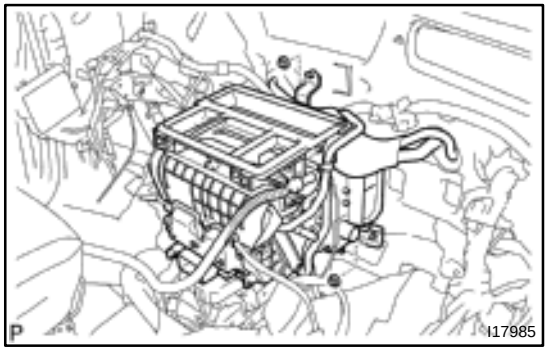

(c) Disconnect the connectors.

(d) Remove the 2 nuts and A/C unit.

AC35U–01

DISASSEMBLY

1. REMOVE PRESSURE PLATE

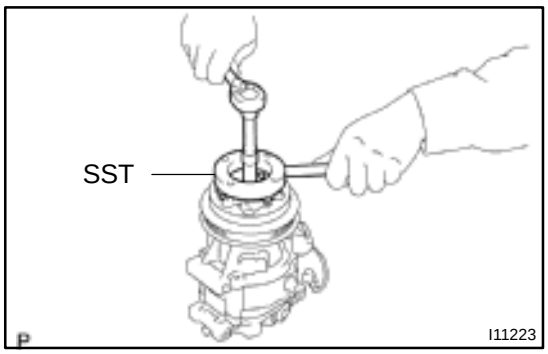

(a) Using SST and a socket wrench, remove the shaft bolt.
SST 07112–76050
Torque: 13.2 N·m (135 kgf·cm, 9 ft·lbf)

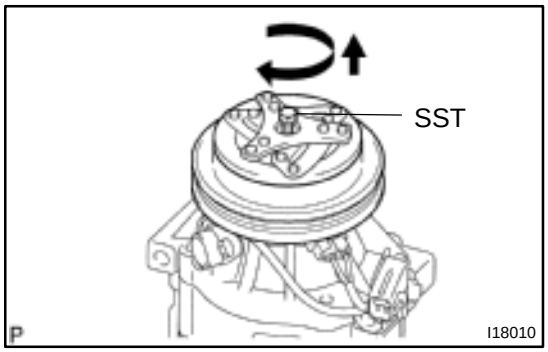

(b) Install SST to the pressure plate.
SST 07112–66040

(c) Using SST and a socket wrench, remove the pressure plate.
SST 07112–76050, 07112–66040

(d) Remove the shims from the shaft.

2. REMOVE ROTOR

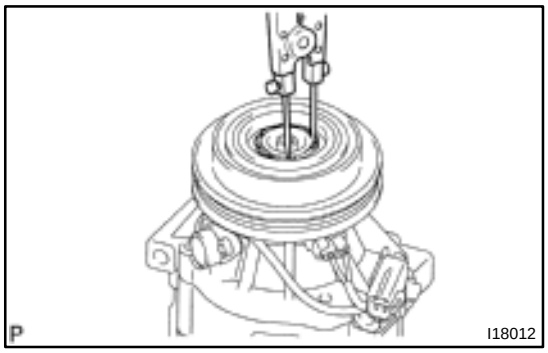

(a) Remove the snap ring.

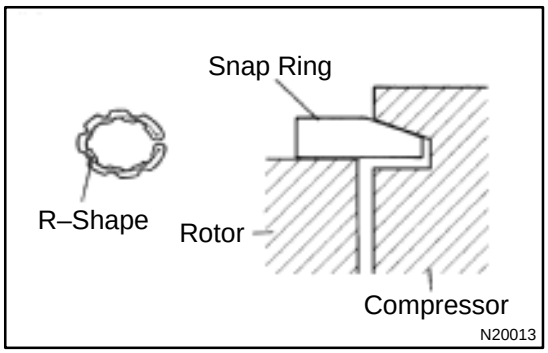

NOTICE:
At the time of reassembly, please refer to the following item.
The snap ring should be installed so that its beveled side faces up.

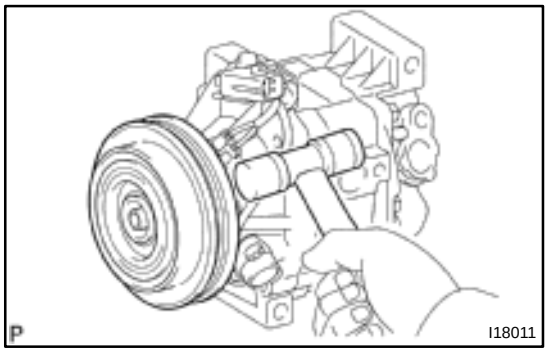

(b) Using a plastic hammer, tap the rotor off the shaft.

NOTICE:
Be careful not to damage the pulley when tapping on the rotor.

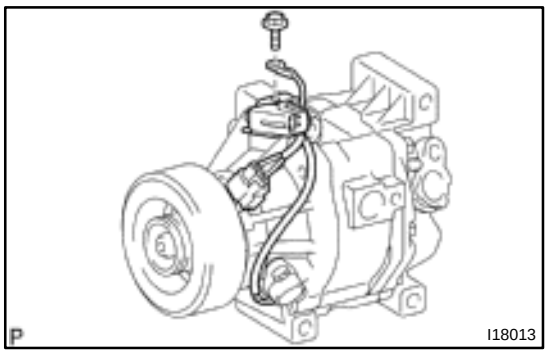

3. REMOVE STATOR

(a) Disconnect the connector from the stator.

(b) Remove the screw and stator lead wire.

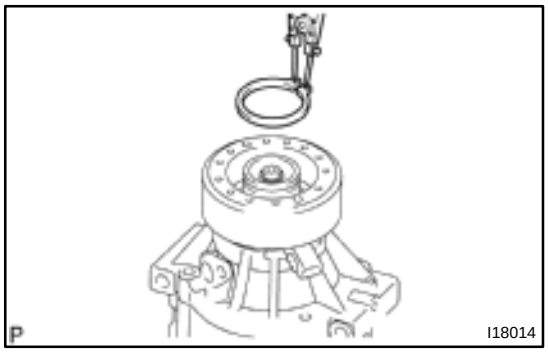

(c) Remove the snap ring.

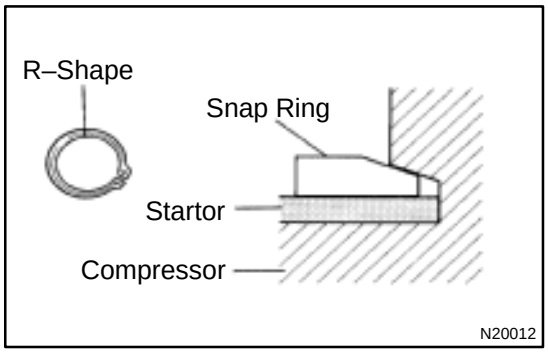

NOTICE:

At the time of reassembly, please refer to the following item.

The snap ring should be installed so that its beveled side faces up.

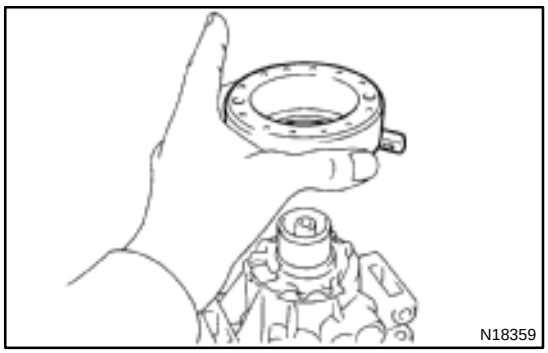

(d) Remove the stator.

AC36Q–01

COMPONENTS

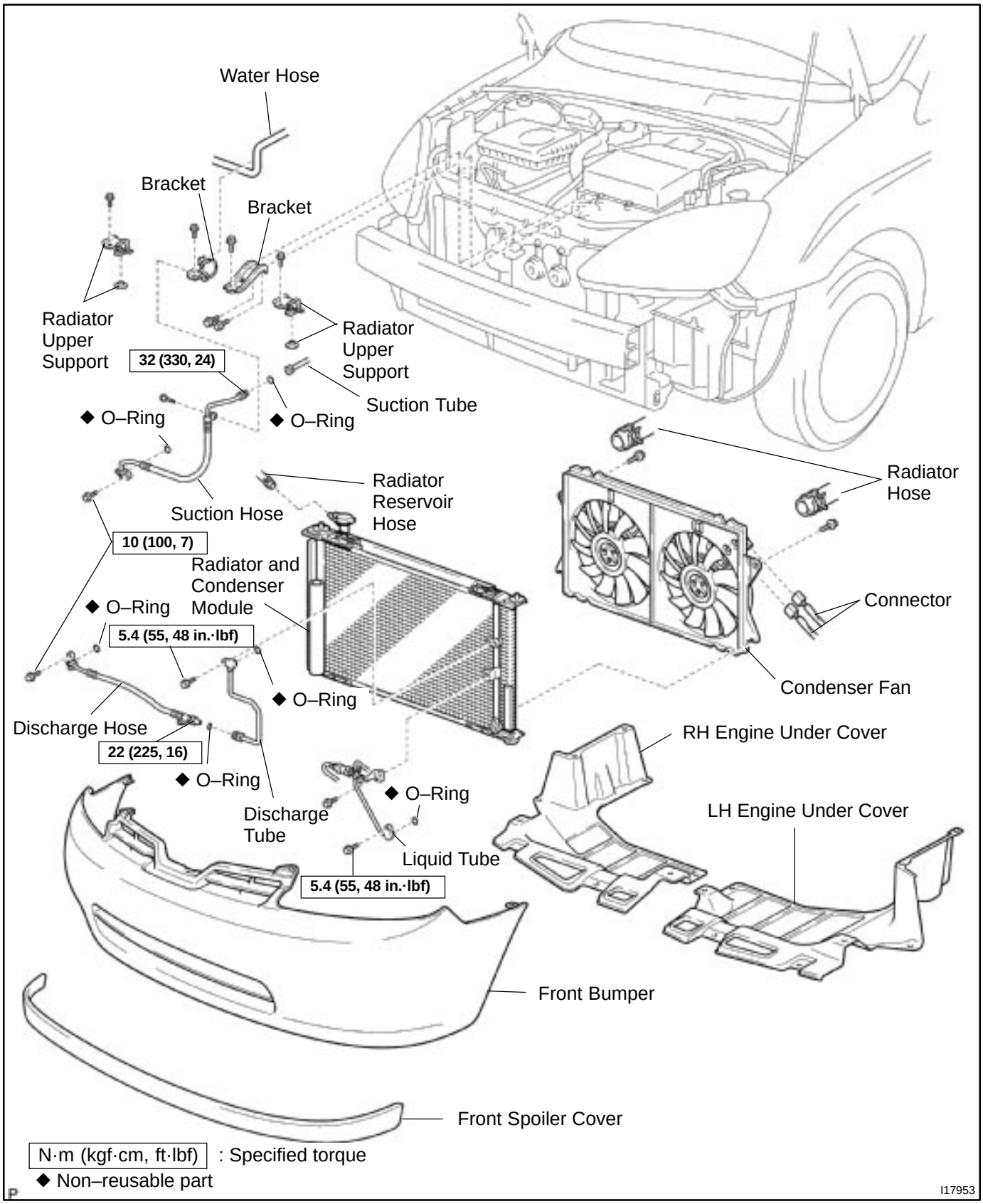

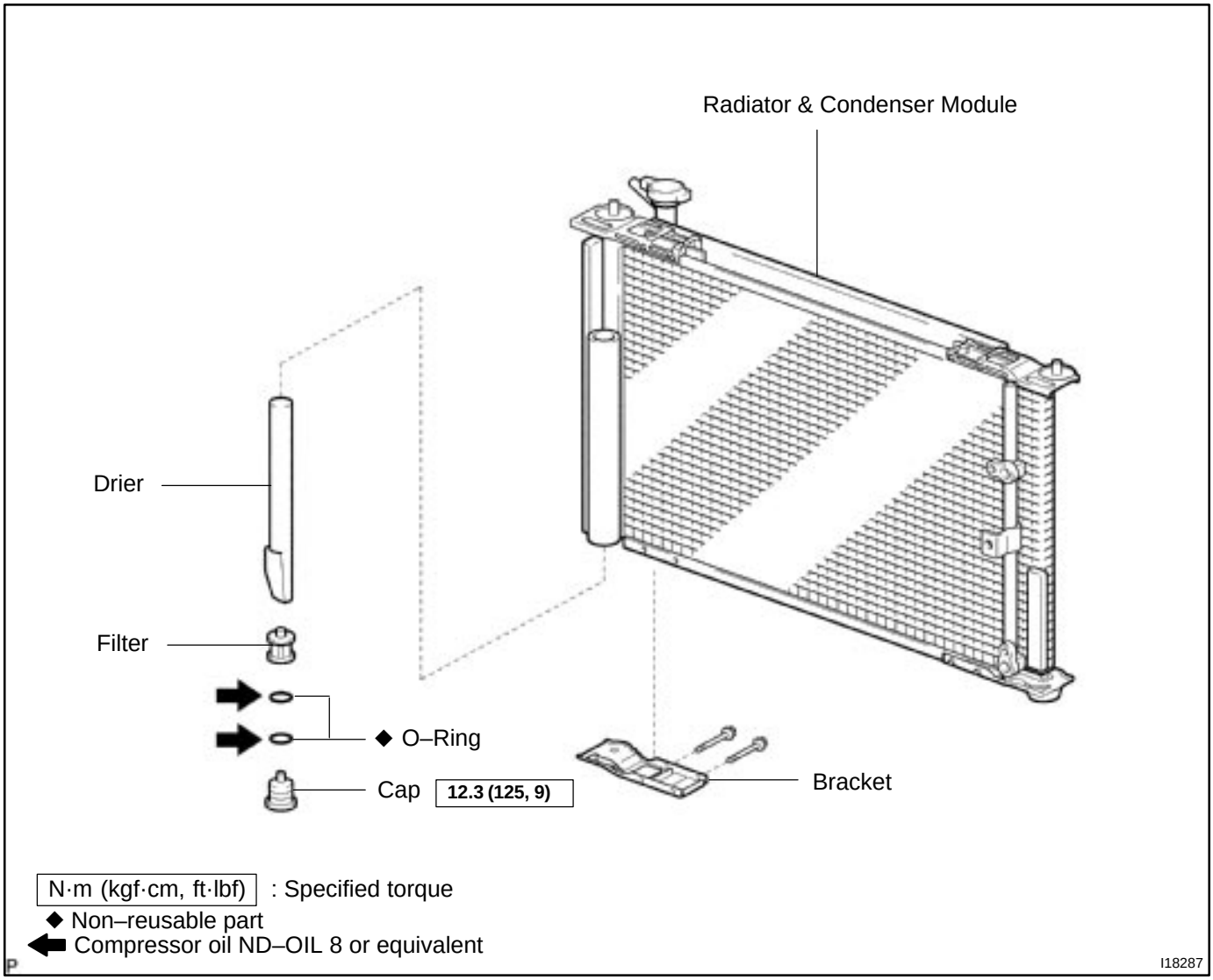
Radiator & Condenser Module
Drier
Filter
◆ O–Ring
Cap
12.3 (125, 9)
Bracket
N·m (kgf·cm, ft·lbf) : Specified torque
◆ Non–reusable part
Compressor oil ND–OIL 8 or equivalent
I18287

AC36R–01

REMOVAL

1. DISCHARGE REFRIGERANT FROM REFRIGERATION SYSTEM

HINT:

At the time of installation, please refer to the following item.

Evacuate air from refrigeration system.

Charge system with refrigerant and inspect for leakage of refrigerant.

Specified amount: 500 ± 50 g (17.64 ± 1.76 oz.)

2. DRAIN ENGINE COOLANT FROM RADIATOR

HINT:

It is not necessary to drain out all the coolant.

3. REMOVE CONDENSER FAN ASSEMBLY (See Page AC–69)

4. REMOVE FRONT BUMPER (See Page BO–4)

5. REMOVE RADIATOR RESERVOIR HOSE

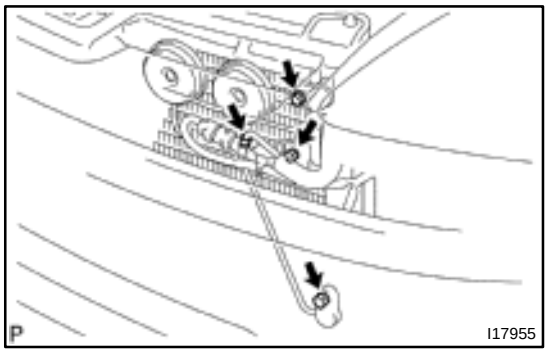

6. DISCONNECT DISCHARGE AND LIQUID TUBE

(a) Remove the 2 bolts and disconnect discharge and liquid tube.

Torque: 5.4 N·m (55 kgf·cm, 48 in.·lbf)

NOTICE:

Cap open the fittings immediately to keep moisture or dirt out of the system.

HINT:

At the time of installation, please refer to the following item.

Lubricate 2 new O–rings with compressor oil and install them to the tubes.

(b) Remove the bolt.

(c) Disconnect the liquid tube and remove the bracket.

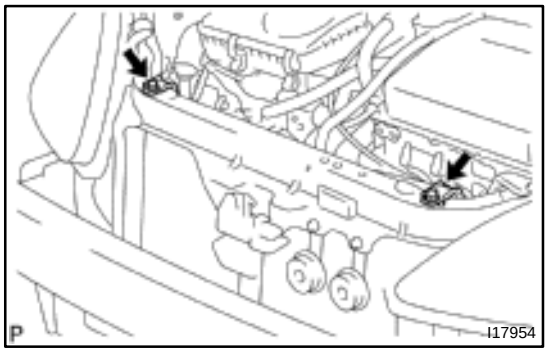

7. REMOVE RADIATOR UPPER SUPPORT

Remove the 2 bolts and 2 radiator upper supports.

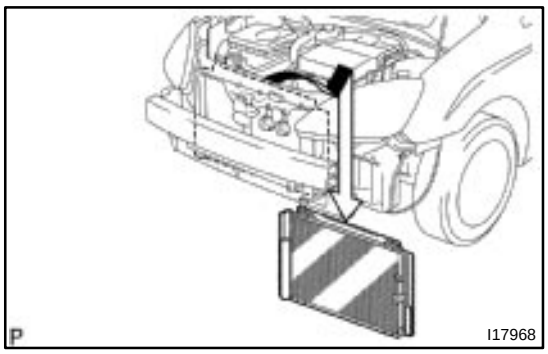

8. REMOVE RADIATOR & CONDENSER MODULE

(a) Push the radiator & condenser module toward engine.

(b) Pull up the radiator until the lower radiator support is removed.

(c) Pull it downward to remove it.

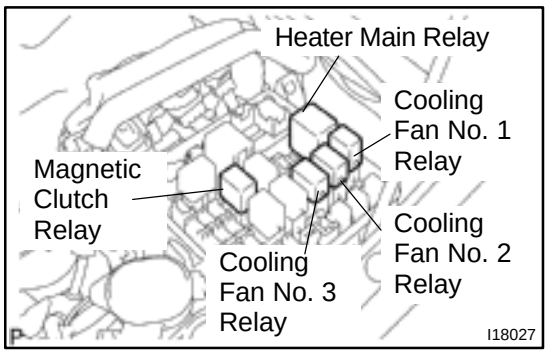

RELAY

AC36O–01

INSPECTION

1. REMOVE RELAY

(a) Remove the relay from the engine room J/B.

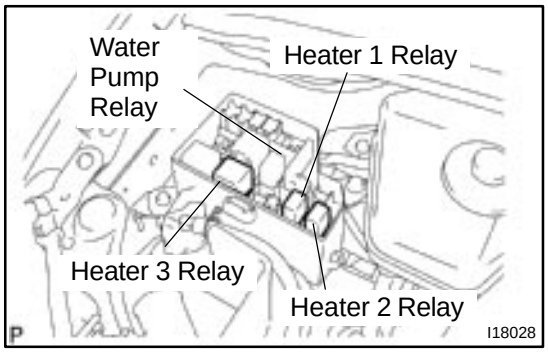

(b) Remove the relay from the engine room R/B No. 3.

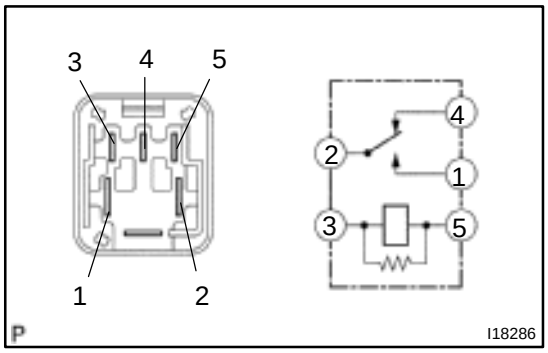

2. INSPECT HEATER MAIN RELAY CONTINUITY

Condition	Tester connection	Specified condition
Constant	3 – 5 2 – 4	Continuity
Apply B+ between terminals 5 and 3.	1 – 2	Continuity

If continuity is not as specified, replace the relay.

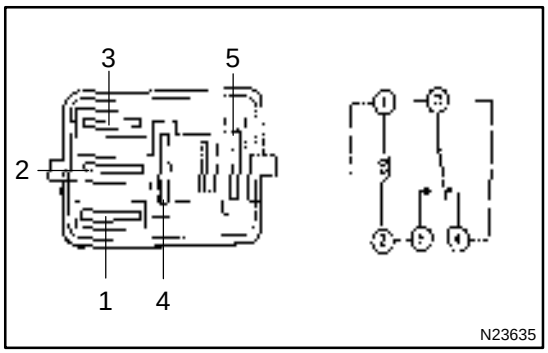

3. INSPECT COOLING FAN NO. 2 RELAY CONTINUITY

Condition	Tester connection	Specified condition
Constant	1 – 2 3 – 4	Continuity
Apply B+ between terminals 1 and 2.	3 – 5	Continuity

If continuity is not as specified, replace the relay.

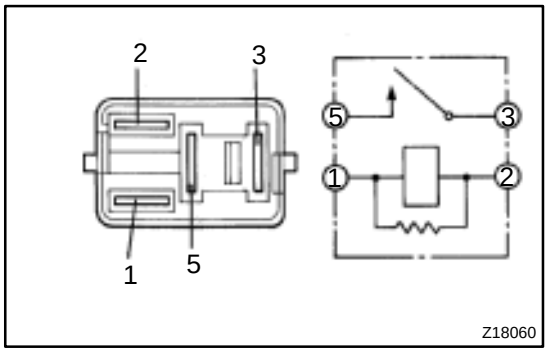

4. INSPECT MAGNETIC CLUTCH, COOLING FAN NO. 1, 3, HEATER 1, 2, WATER PUMP RELAY CONTINUITY

Condition	Tester connection	Specified condition
Constant	1 – 2	Continuity
Apply B+ between terminals 1 and 2.	3 – 5	Continuity

If continuity is not as specified, replace the relay.

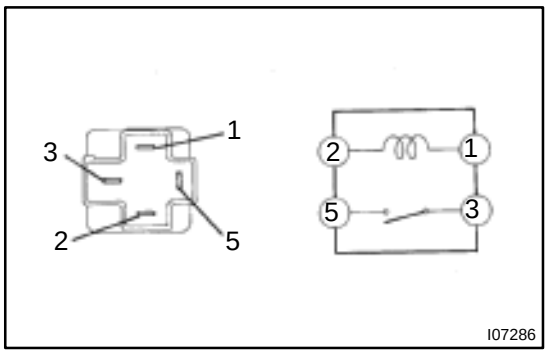

5. INSPECT HEATER 3 RELAY CONTINUITY

Condition	Tester connection	Specified condition
Constant	1 – 2	Continuity
Apply B+ between terminals 1 and 2.	3 – 5	Continuity

If continuity is not as specified, replace the relay.

AC36D–01

REMOVAL

1. DISCHARGE REFRIGERANT FROM REFRIGERATION SYSTEM

HINT:

At the time of installation, please refer to the following item.
Evacuate air from refrigeration system.
Charge system with refrigerant and inspect for leakage of refrigerant.

Specified amount: 500 ± 50 g (17.64 ± 1.76 oz.)

2. DRAIN ENGINE COOLANT FROM RADIATOR

HINT:

It is not necessary to drain out all coolant.

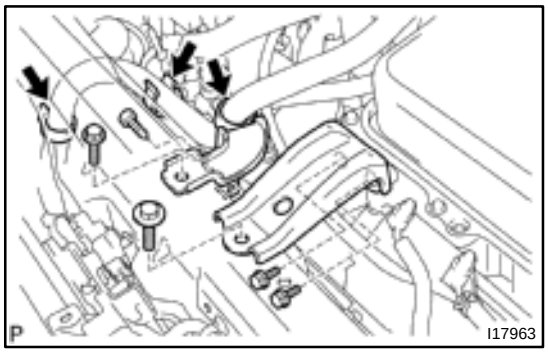

3. REMOVE BRACKETS

(a) Remove the water hose from fan shroud.
(b) Remove the 5 bolts and 2 brackets.

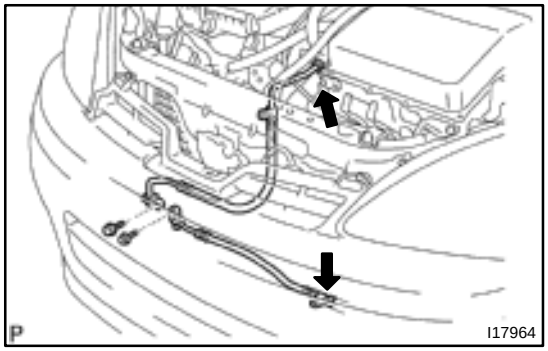

4. REMOVE SUCTION AND DISCHARGE HOSES

(a) Remove the 2 bolts and disconnect the both hoses.
Torque: 10 N·m (100 kgf·cm, 7 ft·lbf)

HINT:

At the time of installation, please refer to the following item.
Lubricate 2 new O–rings with compressor oil and install them to the tubes.

(b) Loosen the 2 nuts and remove the both hoses.
Torque:
Suction hose 32 N·m (330 kgf·cm, 24 ft·lbf)
Discharge hose 22 N·m (225 kgf·cm, 16 ft·lbf)

HINT:

At the time of installation, please refer to the following item.
Lubricate 2 new O–rings with compressor oil and install them to the tubes.

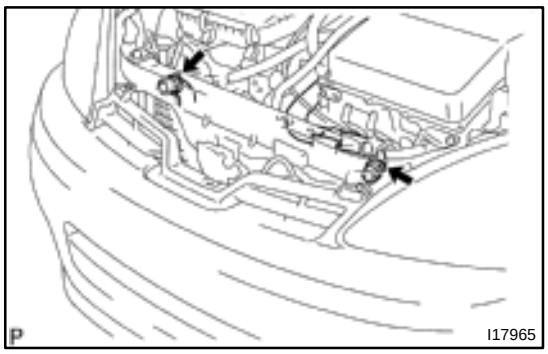

5. DISCONNECT RADIATOR HOSES FROM RADIATOR AND CONDENSER MODULE

(a) Using pliers, grip the claw of the hose clip and slide the clip along the hose.

(b) Disconnect the radiator hoses.

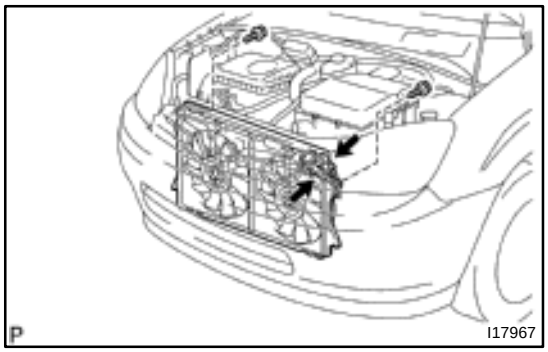

6. REMOVE CONDENSER FAN WITH FAN SHROUD

(a) Disconnect the 2 connectors.

(b) Remove the 2 bolts.

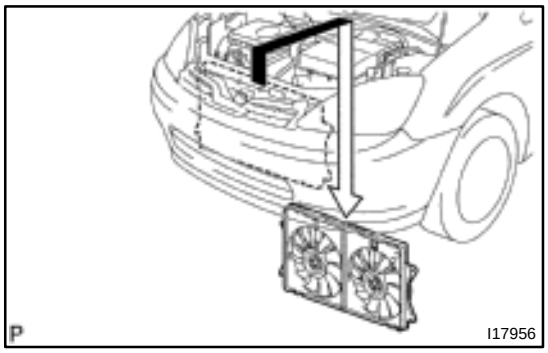

(c) Pull up the condenser fan with fan shroud until the it is removed from the radiator and condenser module.

(d) Pull it downward to remove it.

AC36J–01

DISASSEMBLY

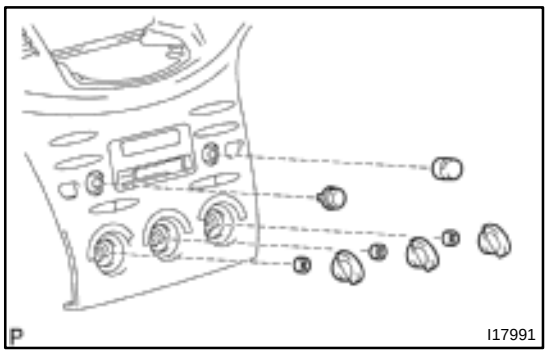

1. REMOVE CONTROL KNOBS

(a) Pull out the 5 control knobs.

(b) Remove the 3 nuts.

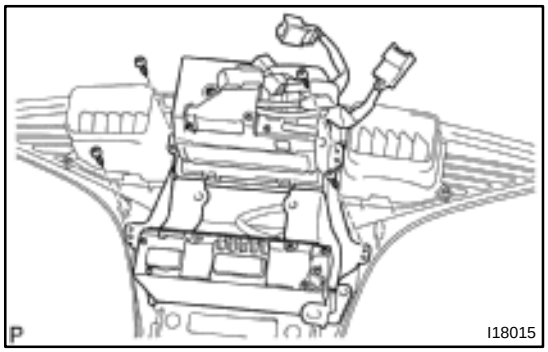

2. REMOVE MULTI DISPLAY & RADIO RECEIVER ASSEMBLY

Remove the 4 screws and multi display & radio receiver assembly.

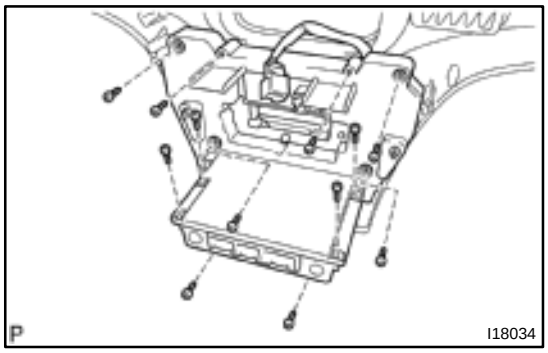

3. REMOVE A/C AMPLIFIER

(a) Remove the 12 screws and cover.

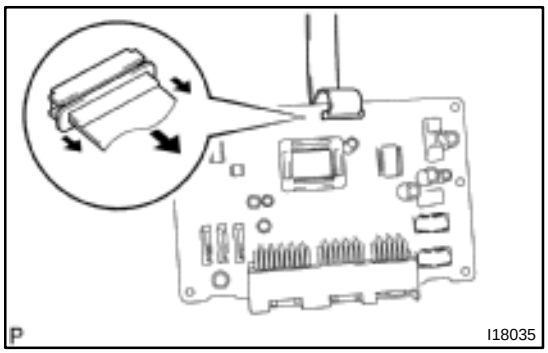

(b) Unlock the connector lock and pull out the flat harness from center cluster module.

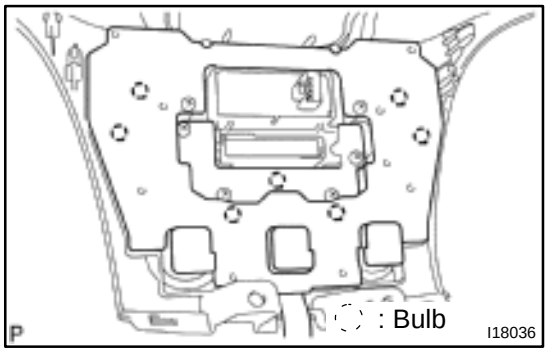

4. REMOVE BULBS

Using a screwdriver, turn the bulb to the left and pull out the bulb.

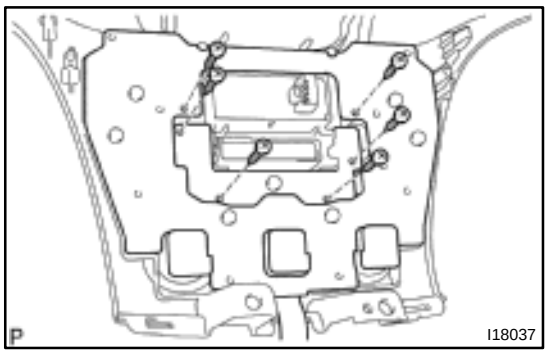

5. REMOVE CLUSTER MODULE CIRCUIT

Remove the 6 screws and center cluster module.

AC36K–01

INSPECTION

1. INSPECT ILLUMINATION OPERATION

(a) Connect the positive (+) lead from the battery to terminal 5 and negative (–) lead to terminal 10, then check that the illumination lights up.

If operation is not as specified, check the faulty bulb.

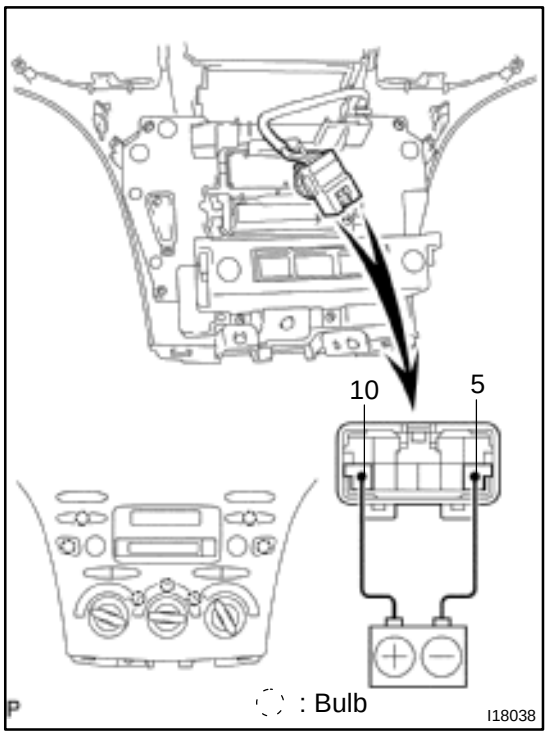

(b) Apply the tester as shown in the illustration to the test for continuity.

If continuity exists, replace the heater control.

If no continuity exists, replace the bulb.

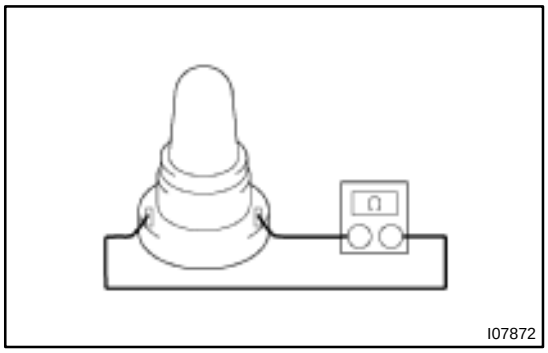

2. INSPECT INDICATOR OPERATION

Connect the positive (+) lead from the battery to terminal 1 and negative (–) lead to terminal 7, then check that the illumination light up.

If operation is not as specified, proceed next inspection.

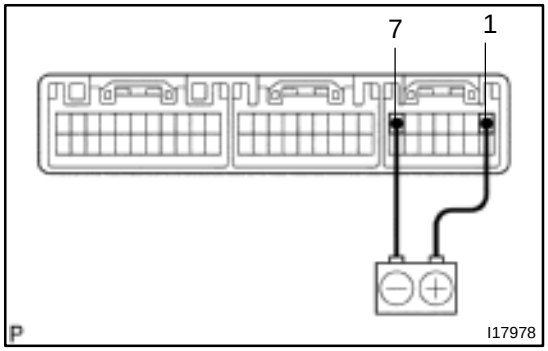

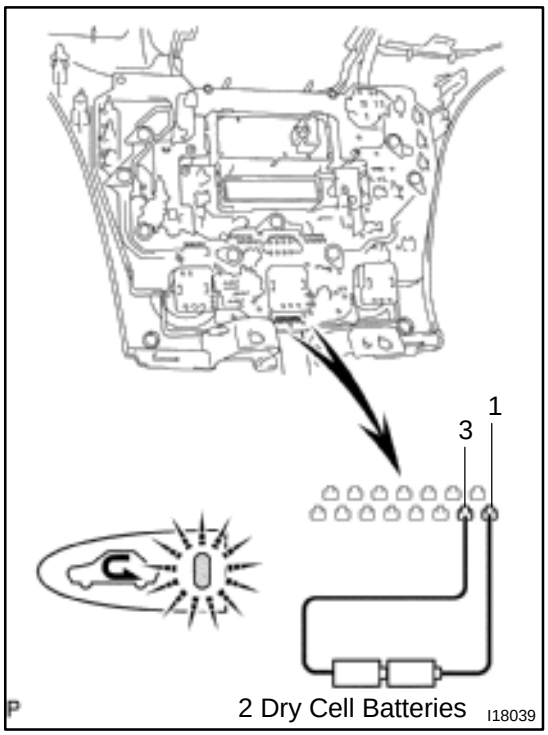

3. INSPECT F/R INDICATOR OPERATION

Connect the positive (+) lead from the two 1.5 V dry cell batteries to terminal 1 and negative (–) lead to terminal 3, then check that the F/R indicator lights up.

If operation is as specified, replace the A/C amplifier.

If operation is not as specified, replace the cluster module circuit.

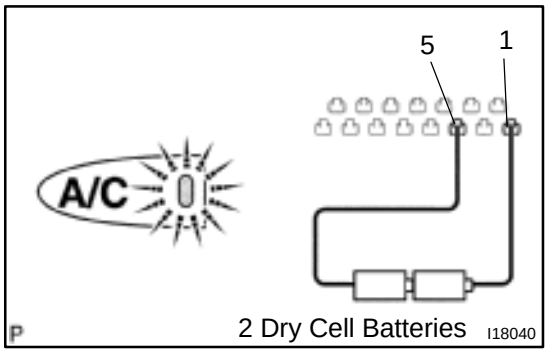

4. INSPECT A/C INDICATOR OPERATION

Connect the positive (+) lead from the two 1.5 V dry cell batteries to terminals 1 and negative (–) lead to terminal 5, then check that the A/C indicator lights up.

If operation is as specified, replace the A/C amplifier.

If operation is not as specified, replace the cluster module circuit.

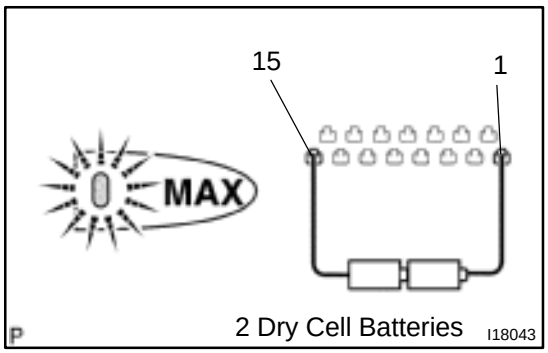

5. INSPECT MAX. A/C INDICATOR OPERATION

Connect the positive (+) lead from the two 1.5 V dry cell batteries to terminal 1 and negative (–) lead to terminal 15, then check that the MAX. A/C indicator lights up.

If operation is as specified, replace the A/C amplifier.

If operation is not as specified, replace the cluster module circuit.

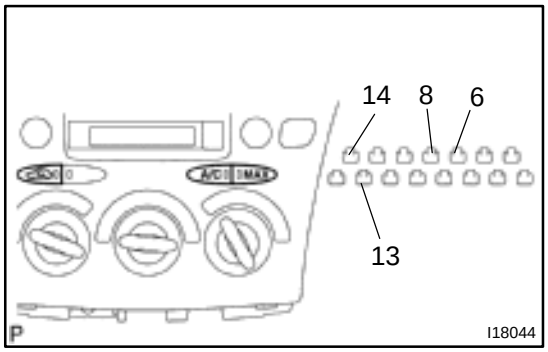

6. INSPECT SWITCH CONTINUITY

Check the continuity between terminals while switch is pressed, as shown in the chart.

Switch	Tester connection	Specified condition
F/R	6 – 13	Below 500 Ω
A/C	8 – 13	Below 500 Ω
MAX. A/C	13 – 14	Below 500 Ω

If operation is not as specified, replace the cluster module circuit.

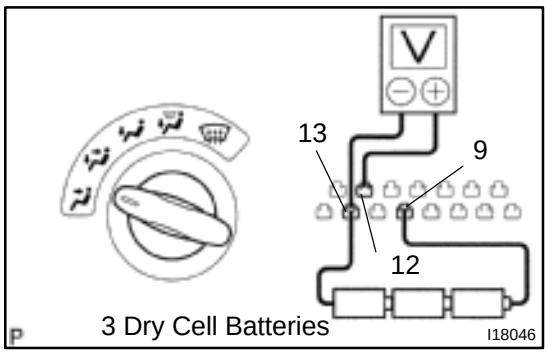

7. INSPECT MODE CONTROL DIAL OPERATION

(a) Check that the resistance between terminals 12 and 13 is approx. 3.0 kΩ.

(b) Connect the positive (+) lead from the three 1.5 V dry cell batteries to terminal 9 and negative (–) lead to terminal 13.

(c) Connect the positive (+) lead from the tester to terminal 12 and negative (–) lead to terminal 13, then check that the voltage at each dial position, as shown in the chart below.

Dial position	Specified condition
FACE → B/L	0.7 V
B/L → FOOT	2.0 V
FOOT → F/D	3.2 V
F/D → DEF	4.4 V

If operation is not as specified, replace the cluster module circuit.

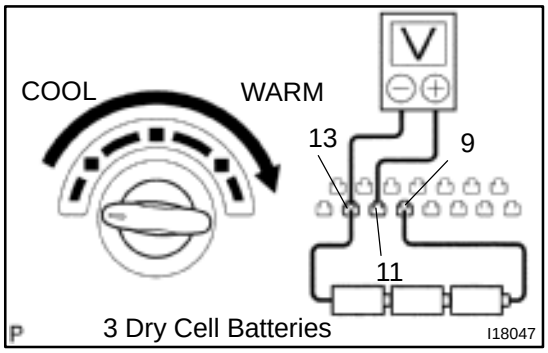

8. INSPECT TEMPERATURE CONTROL DIAL OPERATION

(a) Check that the resistance between terminals 11 and 13 is approx. 3.0 kΩ.

(b) Connect the positive (+) lead from the three 1.5 V dry cell batteries to terminal 9 and negative (–) lead to terminal 13.

(c) Connect the positive (+) lead from the tester to terminal 11 and negative (–) lead to terminal 13.

(d) Gradually turn the dial from ”MAX. COOL” side to ”MAX. WARM” side and check that the voltage increase from 4.5 to 0.4 V.

If operation is not as specified, replace the cluster module circuit.

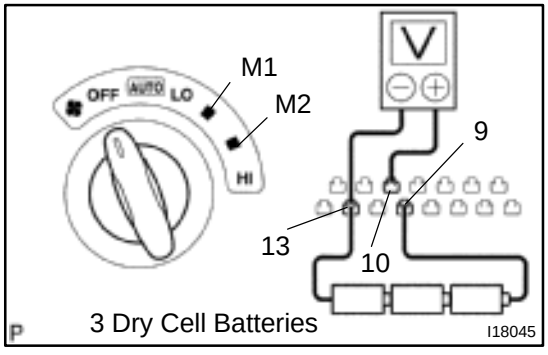

9. INSPECT BLOWER SPEED CONTROL DIAL OPERATION

(a) Check that the resistance between terminals 10 and 13 is approx. 3.0 kΩ.

(b) Connect the positive (+) lead from the three 1.5 V dry cell batteries to terminal 9 and negative (–) lead to terminal 13.

(c) Connect the positive (+) lead from the tester to terminal 10 and negative (–) lead to terminal 13 then check that the voltage at each dial position, as shown in the chart below.

Dial position	Specified condition
OFF → AUTO	1.45 V
AUTO → LO	2.25 V
LO → M1	3.05 V
M1 → M2	3.85 V
M2 → H1	4.65 V

If operation is not as specified, replace the cluster module circuit.

DI7NK–01

Cruise Control Switch Circuit

CIRCUIT DESCRIPTION

This circuit carries the SET/COAST, RESUME/ACCEL and CANCEL signal (each voltage) to the ECU.

WIRING DIAGRAM

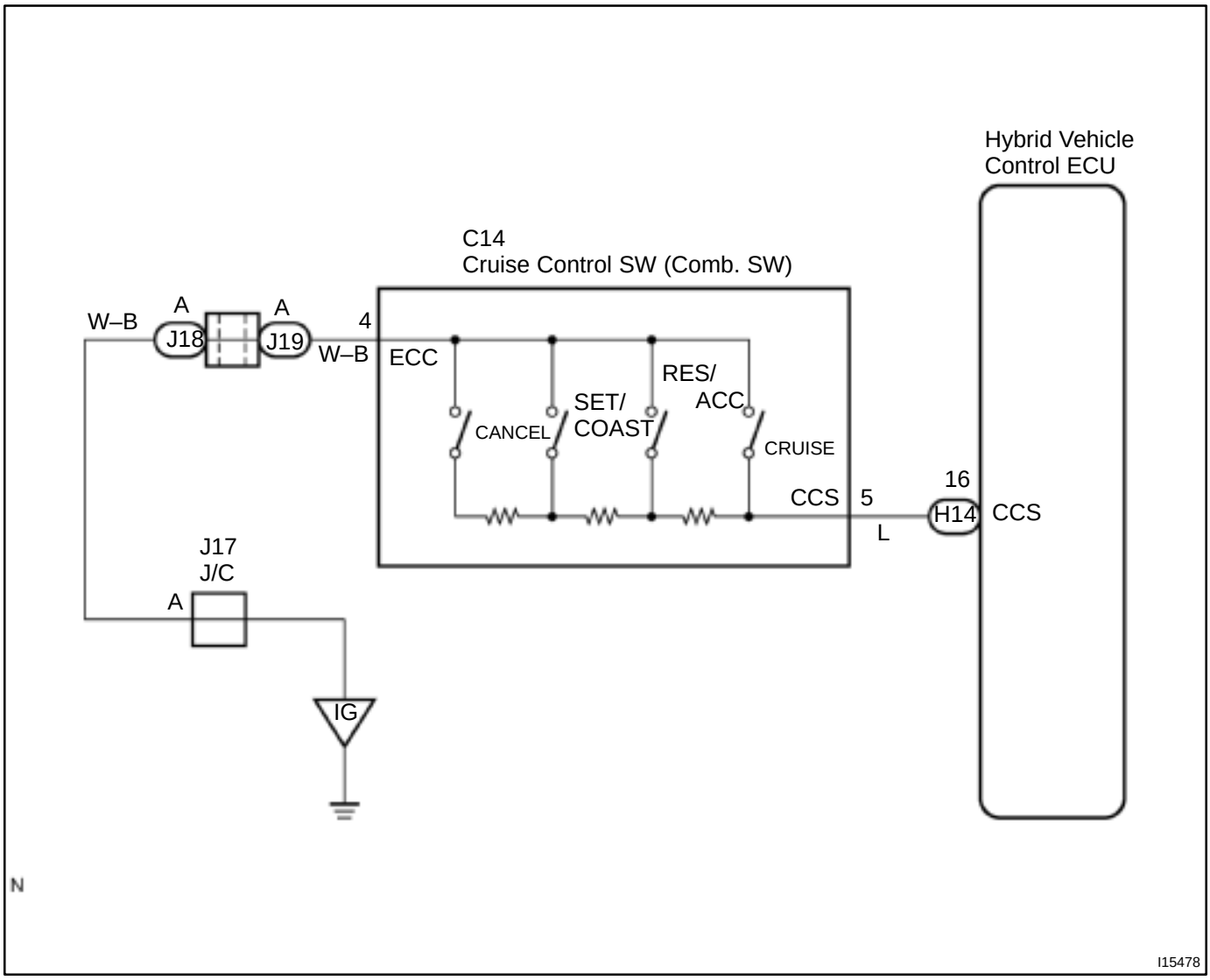

INSPECTION PROCEDURE

1	**Check voltage between terminals CCS of hybrid vehicle control ECU connector and body ground.**

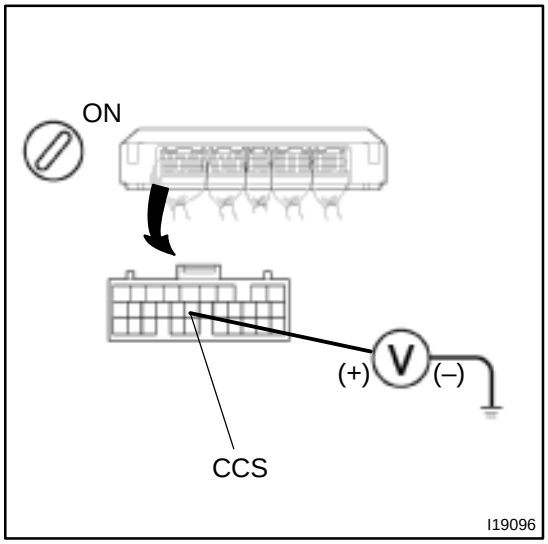

PREPARATION:

(a) Remove the hybrid vehicle control ECU with connector still connected.

(b) Turn ignition switch ON.

CHECK:

Measure voltage between terminals CCS of hybrid vehicle control ECU connector and body ground, when each of the SET/COAST, RESUME/ACCEL and CANCEL is turned ON.

Switch position	Voltage (V)
Neutral	10 –16 V
RES/ACC	2.4 – 3.8 V
SET/COAST	4.7 – 6.9 V
CANCEL	6.9 – 9.8 V

NG → **Proceed to next circuit inspection shown in problem symptoms table (See page DI–648).**

OK

2	Check control switch continuity.

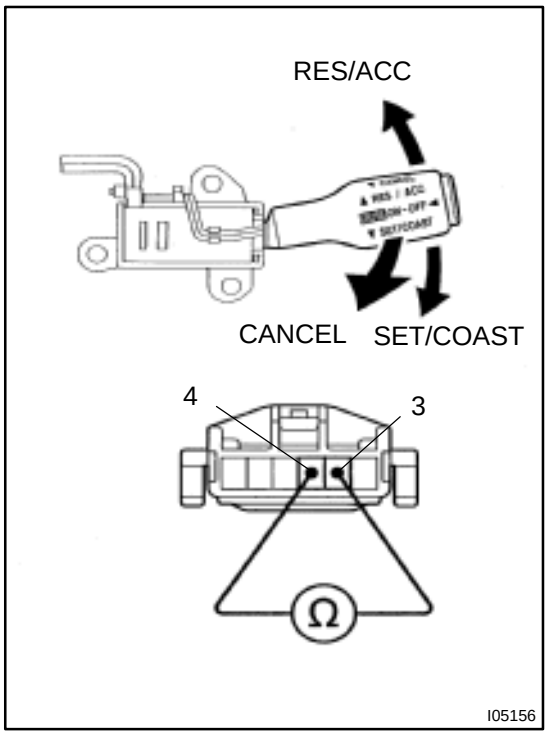

PREPARATION:

(a) Remove steering wheel center pad.

(b) Disconnect the control switch connector.

CHECK:

Measure resistance between terminals 4 and 5 of control switch connector when control switch is operated.

Switch position	Resistance (Ω)
Neutral	∞ (No continuity)
RES/ACC	220 – 260
SET/COAST	600 – 660
CANCEL	1,500 – 1,600

NG → **Replace control switch.**

OK

3	Check main switch continuity.

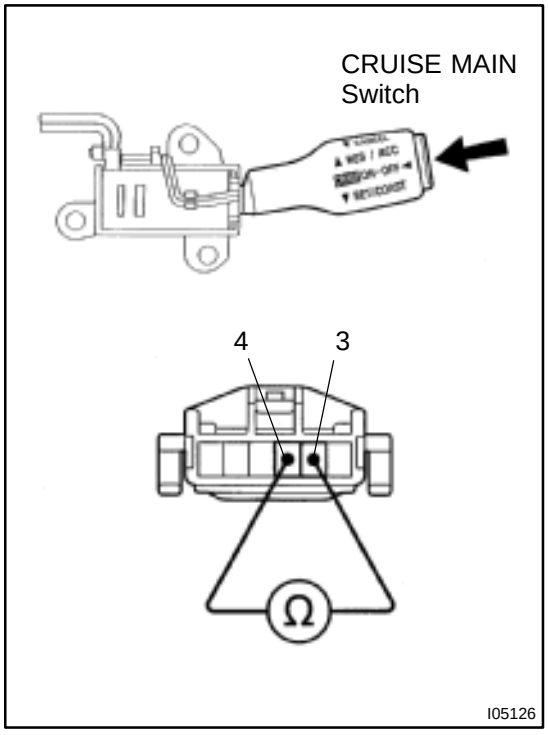

PREPARATION:

(a) Remove steering wheel center pad. (See page SR–6)

(b) Disconnect the control switch connector.

CHECK:

Check continuity between terminals 4 and 5 of control switch connector when main switch is held ON and OFF.

OK:

Switch position	Tester connection	Specified condition
OFF	–	No continuity
Hold ON	4 – 5	Continuity

NG → **Replace control switch.**

OK

4	Check harness and connector between hybrid vehicle control ECU and cruise control switch, cruise control switch and body ground (See page IN–41).

NG → Repair or replace harness or connector.

OK

Check and replace hybrid vehicle control ECU (See page IN–41).

DI7XW–01

4. Fuel receiver gauge is inoperative or improper

INSPECTION PROCEDURE

1	Fuel gauge diagnosis check. (See page DI–669)

|
|---|
| |

2	Reset inclination sensor. (See page BE–47)

|
|---|
| |

3	Fuel sender gauge check. (See page BE–42)

NG → Replace fuel tank.

OK

4	Multiplex communication circuit check. (See page DI–750)

CHECK:

Check if the communication between the combination meter and the multiplex communication circuit is normal or not.

No → Multiplex communication circuit error.
Wire harness faulty.

Yes

5	Check the body ECU.

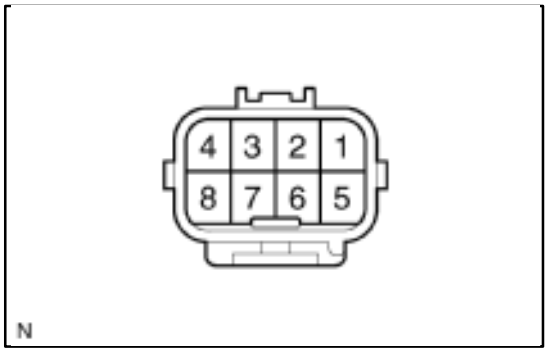

CHECK:

With the fuel sender gauge connector connected, check if the voltage between each of terminal 1 (FV), 5 (FR) and 6 (FE) of the vehicle side wire harness and connector and the body ground is normal or not.

Condition	Terminal	Specified value
Ignition switch ON	1 (FV) – Body ground	4.5 – 5.5 V
Ignition switch ON	5 (FR) – Body ground	0.5 – 5.5 V
constant	6 (FE) – Body ground	Continuity is always identified.

No → **Body ECU faulty.**

Yes

Combination meter ECU faulty.

FOREWORD

To assist you in your sales and service activities, this manual explains the main characteristics of the new PRIUS, in particular providing a technical explanation of the construction and operation of new mechanisms and new technology used.

Applicable models: NHW11 series

This manual is divided into 4 sections.

1. **Introduction –** Exterior appearance and model code.
2. **New Model Outline –** Explanation of the product to give a general understanding of its features.
3. **Technical Description –** Technical explanation of the construction and operation of each new system and component.
4. **Appendix –** Major technical specifications of the vehicle.

CAUTION, **NOTICE**, ***REFERENCE*** and **NOTE** are used in the following ways:

CAUTION	A potentially hazardous situation which could result in injury to people may occur if instructions on what to do or not do are ignored.
NOTICE	Damage to the vehicle or components may occur if instructions on what to do or not do are ignored.
REFERENCE	Explains the theory behind mechanisms and techniques.
NOTE	Notes or comments not included under the above 3 titles.

For detailed service specifications and repair procedures, refer to the following Repair Manuals:

Manual Name	Pub. No.
• 2001 PRIUS Repair Manual	RM778U
• 2001 PRIUS Electrical Wiring Diagram	EWD414U

All information contained herein is the most up-to-date at the time of publication. We reserve the right to make changes without prior notice.

TOYOTA MOTOR CORPORATION

© 2000 TOYOTA MOTOR CORPORATION
All rights reserved. This book may not be reproduced or copied, in whole or in part, without the written permission of Toyota Motor Corporation.
First Printing: Apr. 5, 2000 01-000405-00